The American Gothic Handbook of A.M.

Trusty Old Vacuum Tube Plate Modulators
and Ancient Secret Knowledge from the
Faded Pages and Dusty Tomes of the Hallowed Elders

uncensored - unedited - uncorrected – unauthorized – unapologetic

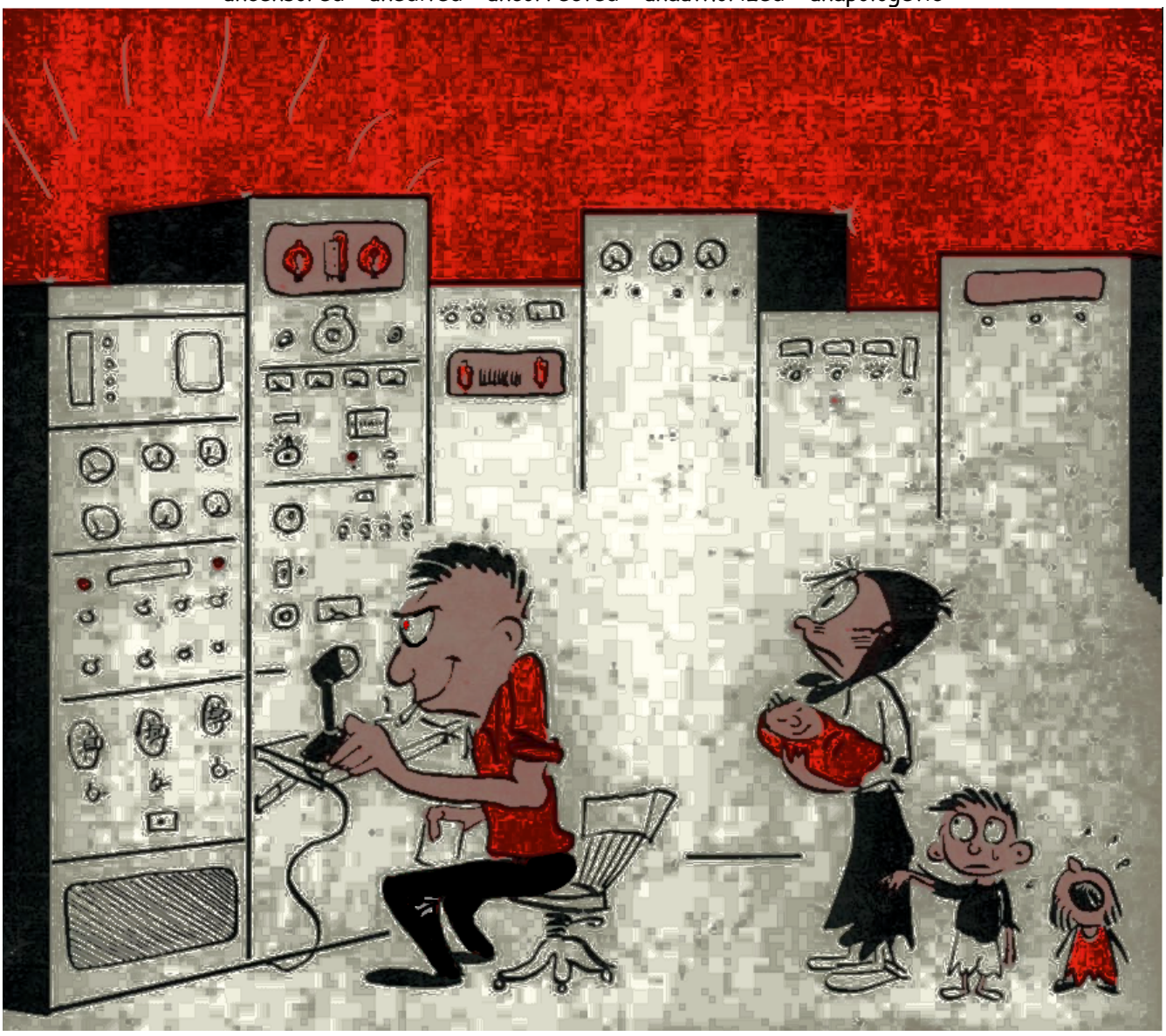

Modulators ~ drivers ~ speech amps ~ analog processing ~ modulation monitors
regulated power ~ how to make things no one makes at home ~ forgotten projects
crafty schemes long buried ~ and many other ways to enjoy AM as the Old Ones did

Preface

AM has been around since about 1900 AD. The science reached a zenith in the late 1940's and after that it fell from favor as the masses were driven to SSB, over time discarding hoary hot glass and iron beauty of AM for the communications channel advantages and the low prices of foreign-made plastic radios full of microcircuits.

In the 1990's, AM began to enjoy a resurgence of popularity. Like CW, AM is steeped in history as well as being downright fun and challenging. All along, there have been many devout independent thinkers including thousands of Old Buzzards who never stopped using AM. Good AM is a science executed as an art.

This volume assumes the experimenter already has a tube type CW transmitter to modulate, and is familiar with its operation and dangers. There are no safety warnings. It's usually very simple to add AM without interfering with the CW function. The presentation will not focus on the Class-C or RF stage, except where interaction with a modulator is concerned.

The main goal of this collection of articles is to inspire experimenters to try AM the old fashioned way, or at least to provide interesting reading regarding the practices and results of the good old days. For AM, these are the good new days!

The yellowing or graying of the 70 year old pages is regrettable but it is what it is. For a few, processing the images just made it worse so it was left as-is. Magazines were never intended to last that long.

Although some of the articles herein call for tubes no longer plentiful, substitutions can be made for many of them. 838's are not available inexpensively. A modern 572B will work. The assemblers assume the reader has, or will learn, this knowledge. At the large end, 304TL's → China 3-500Z's. For small voltage amplifying and driver tubes, there are many close replacements and don't overlook the "TV set" types for good performance at lowest cost.

To make AM, Several tube element voltages can be modulated in order to put speech on a carrier. This volume intentionally focuses on "high level" or "plate" modulation because of its simplicity and how this method preserves the efficiency of the Class C RF stage. It is interesting to work with an audio amplifier that is comparable in power input to the Class C stage.

In addition to the important focus on the output stages of modulators, included articles regard direct-coupled Class B grid drivers, automatic level control and feedback, distortion and clipping, modulation scopes, power supplies, equalization, tube type servos and automatic tuning, microphones, the phone patch, and other fun. These are not absolutely necessary but their understanding will contribute to the reader's knowledge in ways that improve his use of vacuum tubes for all purposes and to demonstrate that considerable automation and fine quality communications is possible without microprocessors and other modern whizzbang. Solid state devices have their place. If they must be used, the power supply is a good place for them.

The latest experimental practices for modulators, including classes beyond "B" and high-tech MOSFET designs, can freely be found on the WWW and are only lightly considered within the articles found herein, if at all.

Information on safety, tube type transmitters, modulation, and class C RF amplifiers can be found in the older RADIO, RSGB, and ARRL handbooks, as can information on the basics of AM. Don't overlook the old engineering texts.

One practice should be absolutely avoided. This is a practice of using a "high level splatter filter". If the so-equipped modulator is accidentally driven to clipping, the result is sometimes a blown modulation transformer. But never fear, no splatter will escape (whew!). This is an extremely ill-considered and even foolish way to adjust one's bandwidth. The best way to a clear sounding and rule-obeying signal is the proper design and use of a clean audio chain with plenty of headroom in the power stage.

Lastly, some people whine and even foam at the mouth about AM. They hate it and will tell you all about that from a high horse. Just ignore them if they will not be reasonable. Do not rebuke these creatures, for they are already quite wretched and it is cruel to add to their misery.

Modulators

This section concerns mainly the power output stages of larger vacuum-tube modulators and their designs, different techniques that have been applied to their use, and their economy.

Articles on smaller audio amplifiers that may also be used as modulators for lower powered transmitters are covered in the section on modulator drivers and speech amplifiers.

The modulator power stage is the Red Meat of your on-air voice. It must be able to pass, at full rated power, the entire band of voice frequencies with which it is driven, with as little as possible. The first two are easily addressed by respecting the power ratings and operating the tubes properly (including some feedback when it helps). The phase shift is a phenomemon revealed when the signal nears one edge of the rated frequency range. There is far more detail to these statements than can be addressed here.

To this end, the modulation transformer must be of the highest quality available. Many "ham" components were designed for low cost and while they may be robust electrically and adequate audio-wise, they sometimes fall short at the low frequency end when tested at rated power.

The -3dB power bandwidth should extend at least two octaves above and below the chosen bandwidth. This power handling is not the same as the frequency response which can be corrected by equalization. Only a test will show the quality of a modulation transformer.

The main cause of poor LF power bandwidth is a small modulation transformer core (just as a hi-fi amplifier's output transformer is almost as large as its power transformer, but a public address unit may have one half the size because it does not have to handle 20 cycles; more like 50 cycles. Too low an inductance at a given low frequency is also an issue.

Within reason, operating transformers at lower power levels improves LF performance. Menno Van Der Veen, expert designer of audio transformers, said:

"The power capability doubles when the frequency is a factor 1.414 larger.

The power capability halves when the lowest frequency is devided by 1.414 (squareroot 2)."

A typical 600 Watt, 300-3000Hz rated unit can make 300W at 212Hz. At 1200W, it would only handle "lows" down to 424 cycles. The high frequency response is governed by the mechanical construction of the unit and winding placement techniques more than the relative amount of iron. There are few, if any, workarounds for the high end, but fortunately the high frequency modulation transformer power bandwidth is usually more than sufficient for our purposes.

Pushing a transformer to a higher power is usually OK for intermittent voice service, but not for continuous sine wave or "test" duty. Never exceed the voltage ratings. If necessary, determine them from the availabe data on the tubes they were intended for. More current is the safer way to do it. In the days when surplus was 10 cents a pound, many transformers were blown by ham experimenters due to overvoltage. Overcurrent just gets them hot. The 100W ART-13 modulation transformer has been run at 300W to modulate a KW input according to one ham article, but is it still working today? It's no longer available for $4.95 in any case. 2X the power for intermittent service is a very wise limit.

Broadcast quality transformers, those rescued from scrapped BC transmitters, are excellent for ham use because they handle 50 cycles to 10 kilocycles at full power, but they are hard to find, and prohibitively expensive at 'new' prices for most. If a transmitter is found, well, try to get the whole thing and rework it for ham use! It's called "big iron". A modulation transformer from an old 250W broadcast transmitter would have a 50-10,000 cycle rating at 150 Watts and is excellent for a legal limit ham transmitter, assuming a 500W DC input and 250W for modulation.

In any case, it's up to the AM-centric ham to find transformers, judge them, lug them home, and of course pay for them. Rewinding services are economical solutions to finding an old unit that's blown. Modern materials improve the durability of the rewind as well. A few individual ham operators and several companies specialize in this work.

Neutralizing the Class-B Modulator for Greater Fidelity

By F. J. Burris, W6KGG*

IT IS often found that, after adding a high-power Class-B modulator to an existent audio amplifier, the quality of reproduction has been dealt a severe loss. This fault is due in general to three factors, only two of which are accorded much attention. In this discussion it will be assumed that these latter two have been adequately taken care of; that is, stable excitation, and good plate-power supply and grid-bias voltage regulation (with suitable r.f. chokes in all mercury-vapor rectifier plate connections).

The third factor with which we may be concerned is that of neutralizing the Class-B audio amplifier. This does not imply that the amplifier may have been unstable or was liable to crack into parasitic oscillations on excitation peaks, etc. Neither is the amplifier apt to go into sustained oscillation, because of circuit losses and loading. The author has never had to resort to stabilizing resistors in order to control an efficient amplifier either in broadcast or amateur work, and therefore thinks their use an unnecessary evil.

In general, phase-shift distortion increases with frequency in any audio transformer. The transformer may actually tune at some particular point in the audio range without a pronounced peak, below which frequency it will present an

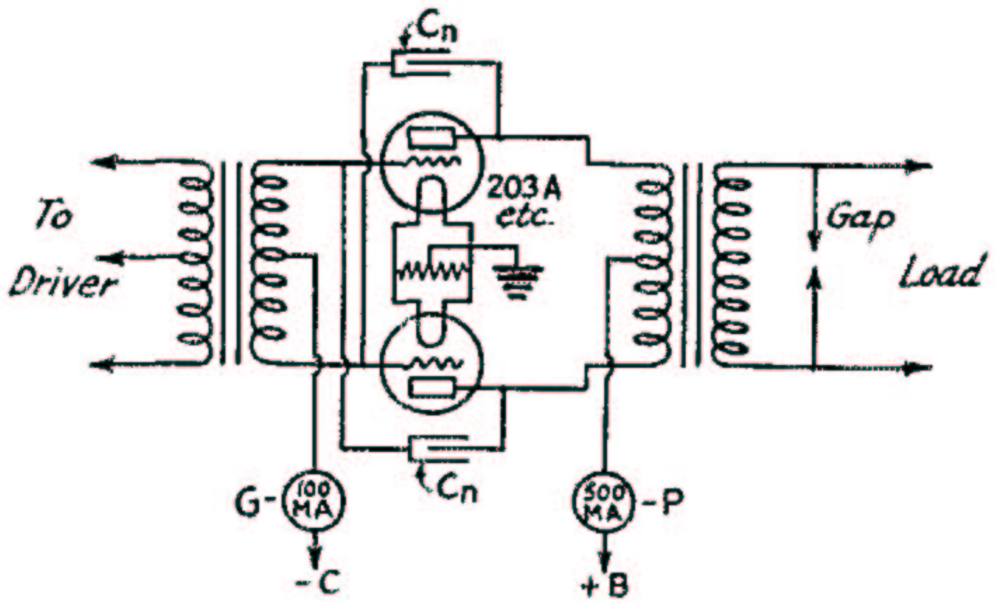

FIG. 1—DIAGRAM OF THE NEUTRALIZED CLASS-B MODULATOR STAGE

inductive reactance and above which point it will have a slight capacitive reactance. It may also be said that the plate circuit load must be inductive at the frequency for which there is regeneration; hence it may be considered that the higher the audio frequency, the higher the amount of degeneration and thus the greater the loss of high-frequency amplification.

With present-day receiver equipment adequate high audio-frequency reproduction may well be tolerated in the transmitter. This will enhance the sibilance and therefore the intelligibility of the conversation, besides adding the valuable personality touch to the speaker's voice which is so

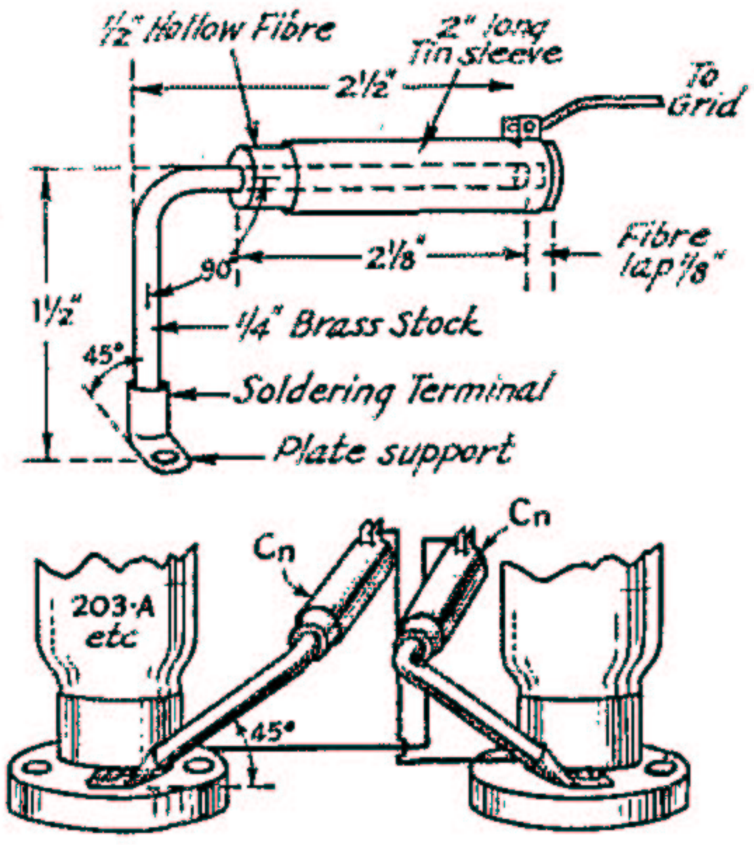

FIG. 2—DETAILS OF THE NEUTRALIZING CONDENSERS

appreciated when the listener knows the speaker directly. There is thus an actual gain to be realized, however small, in neutralizing any transformer-coupled amplifier. Several db of high-frequency response may be recovered thusly from the pyramided losses of several stages.

With the neutralizing condensers C_n connected as shown in Fig. 1, the modulator may be balanced *with the plate voltage off* as in the case of a radio-frequency amplifier, the null being found with a pair of headphones connected across the output while a suitable steady frequency is applied in excitation. If this balance cannot be attained completely over the audible band, due to the difference in characteristics of the input and output transformers, it is best to adjust it at the highest range of frequencies it is desired to preserve.

A very suitable neutralizing condenser may be made as shown in Fig. 2, which is sufficient in dimensions for any tube including the 203-A. It should be correspondingly longer for an 849 or any tube having greater plate-to-grid capacity. A soldering lug of the variety used in connecting motors, etc., forms the support which is fastened directly to the tube socket terminal. Into this is soldered the L-shaped length of brass welding stock of quarter-inch diameter, this forming the

(*Continued on page 102*)

*1205½ El Centro Ave., Hollywood, Calif.

MICA CONDENSERS
. . . Aerovox Engineered

There's good reason why Aerovox Types 1455, 1456 and 1457 Transmitting Condensers depart from conventional design. Here's why:



Flat top and bottom permit perfect stacking for compact assemblies or banks.

●

Insulated mounting holes permit any mounting independent of connections.

●

And insulated terminals permit any combination or individual arrangements, series or parallel.

●

Special terminals permit soldered connections without harmful heat transfer to encased section.

Genuine bakelite case . . . accurate values . . . conservative ratings . . . and plainly stamped as such.

DATA FREE: New 1935 catalog describing complete line of condensers and resistors, on request. Also sample copy of monthly Research Worker.

AEROVOX CORPORATION

73 Washington St. Brooklyn, N. Y.

JACOBS ADJUSTABLE SEPARATOR



U. S. Patent No. 1,950,179—March 6, 1934. Others Pending.

Made of porcelain they provide the means whereby 2 wire R. F. feedlines of any separation from 1" up to and including 6" (used in conjunction with Hertz antenna systems) may be rapidly and efficiently constructed. $2.50 for a set of 6.

CHARLES F. JACOBS (W2EM), 270 Lafayette St., New York, N. Y.

"Quicker than a short circuit"

LITTELFUSES

- INSTRUMENT LITTELFUSES, for meters, 1/200 amp. up.
- HI-VOLT. LITTELFUSES for transmitters, etc., 1,000, 5,000 & 10,000 volt ranges, 1/16 amp. up.
- NEON VOLTAGE FUSES & Indicators (TATTELITES), 100, 250, 500, 1,000 & 2,000 volt ratings.
- AIRCRAFT FUSES, AUTO FUSES, FUSE MOUNTINGS, etc. *Get new Cat. No. 6.*

Littelfuse Labs., 4509 Ravenswood Ave., Chicago, Ill.

◄ ORDER NOW ►

PATTERSON PR-12 complete shipped prepaid $83.70.
RME9D $112.50.
SILVER 5C complete shipped prepaid $74.70.
SUPER-PRO complete $164.64.
NATIONAL HRO $139.80.
All COLLINS transmitters at lowest prices.
All EIMAC, SYLVANIA, TAYLOR tubes.

Trade in Your Receiver or Transmitter

IN STOCK: 40% off National, Hammarlund, Patterson, Silver, Thordarson, Cardwell, Trimm, Cornell-Dubilier, Astatic, Turner, Ward Leonard, Ohmite, Johnson, Universal, Others. Triplett, Sylvania, Taylor, Bliley. Your used apparatus accepted in trade on any apparatus you want, too, and a large stock of used apparatus for sale at low prices.

Every inquiry and order is personally attended to by Robert Henry, W9ARA; an active amateur for ten years; graduate E.E. from M.I.T.; and owner of Henry Radio Shop selling amateur apparatus for six years. Your orders are valued and appreciated. Write for any information and bulletins. Orders gladly shipped C.O.D. if 10% deposit sent with order.

HENRY RADIO SHOP

211–215 North Main St. Butler, Missouri

tage of this type of recorder, it will permit; the recording of many meters simultaneously, whether they be electrical meters or not, maintaining, all the while, the same order of accuracy inherent in the original instruments. Needless to say, the new recorder will have an electric clock movement in place of the present dollar's worth.

Neutralizing the Class-B Modulator for Greater Fidelity

(Continued from page 34)

plate electrode. Over this is slipped the piece of Herkolite or other good grade of fiber tubing having an outside diameter of one-half inch. When cut to the length indicated this will have a maximum capacity of approximately 35 $\mu\mu$fd. An end lap of the fiber insures against arc-over and such a condenser will safely stand any voltage applied in common practice without the addition of a series mica condenser. The outside grid electrode is formed of tin rolled snugly around the tube and soldered, with an end turned up and provided with a screw for locking purposes when set.

What the League Is Doing

(Continued from page 44)

said in *QST*, of believing that their operator license was extended to the same date as the station license, and operating a year or so with no valid operator license! In applying for station renewal, their own proof of use is convicting them of operating without an operator license. Many such careless amateurs are being suspended for some months from the exercise of the amateur privilege. Moral: Take a look at both your operator and station licenses and *know* when they expire.

F.C.C. Report Complying with instructions in the Communications Act, the F.C.C. has made a special report to Congress on certain subjects that may need further legislative action. In the division that most interests us, the most important recommendation is that the law be amended to permit the consolidation of wire, radio and cable telegraph companies. Safeguards would be provided as to the continued employment of labor, American ownership, control of rates and service, etc. Another recommendation is that it be made unlawful for common carriers to make exclusive contracts as against other carriers. Still another would make it unlawful for carriers to issue or recognize franks or give any free service except in connection with distress, weather reports, etc. The language confines the suggestion to commercial companies handling messages for hire and would not apply to amateurs. A report is also to be made by F.C.C. on certain matters connected with broadcasting. It is expected that bills will be introduced in Congress intended to

A New High-Efficiency High-Gain Audio Power Amplifier

A 203-A Class-B Modulator With 6B5 Driver

By O. H. Brewster,* W1BMT and Lew Bellem,** W1BES

ALTHOUGH an avalanche of new tube types has been released for commercial broadcast receiver service during the past few years, no audio type (with the possible exception of the 2B6) has offered low cost, high efficiency and low distortion in basic amateur service. In the 6B5 these features are realized to a considerable extent. This, combined with its novel design and excellent characteristics, makes it of interest to the amateur fraternity.

FUNDAMENTALS OF THE NEW TUBE

The basic principles of the 6B5 are indeed simple, but a description of the applications of the tube to an amplifier would be a bit confusing without a brief discussion of the working of the tube itself.

Class-A amplifier tubes in general are very inefficient because of the relatively high plate input necessary to obtain large plate current swings which necessarily must be restricted to the negative region of the E_p-I_p curves. Pentodes have the advantage of higher efficiency than triodes but are inherently weak sisters when harmonic distortion is considered. The Triadyne (6B5) incorporates the advantages of Class-A and Class-B since it is a tube in which the output section operates with a positive-biased output grid, the cathode of the driver being tied within the tube to the output grid. A brief explanation of what happens in this case is as follows:

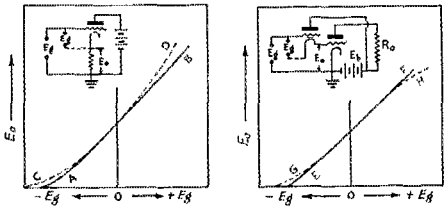

FIG. 1.—CATHODE VOLTAGE VS. GRID VOLTAGE CHARACTERISTICS OF A TRIODE

FIG. 2—CHARACTERISTICS WITH THE INPUT OF A POWER TUBE SUBSTITUTED FOR THE CATHODE RESISTOR

Suppose a triode driver tube is set up as in Fig. 1 and a voltage E_g is applied between grid and cathode. The voltage developed across the cathode resistor is shown by the non-linear curve CD. But if the voltage is applied between grid and ground, then the voltage across the cathode resistor varies as shown by curve AB. It will be noted that a considerable portion of the non-linearity has disappeared. This increase in linearity is due to the degenerative action brought about by the fact that the developed voltage across the resistor appears as part of the input circuit voltage and both voltages are in phase with respect to ground.

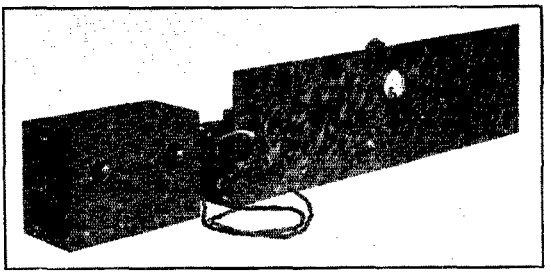

PANEL VIEW OF THE DRIVER-MODULATOR UNIT (RIGHT) AND TWO-STAGE PRE-AMPLIFIER (LEFT)

The overall gain is more than sufficient for full 203-A modulator output with crystal-microphone input.

If a grid-cathode load such as a power tube with a positive grid bias is substituted for the resistor as shown in Fig. 2, and if E_g is applied as before between input grid and input cathode, then as before the voltage appearing on the output grid is non-linear as shown by curve GH. If, however, the voltage is applied between the input grid and ground, a practically linear relation, as shown by curve EF, exists between input voltage and the voltage on the grid of the output tube; hence we have a perfect driver. Since a linear relation exists between input voltage and output grid voltage, and the output plate current is linear with respect to output grid voltage, it follows that the output plate current will be linear with respect to input grid voltage, within the limits of the tube's rating. Such is the 6B5, whose ratings are as follows:

TRIADYNE AMPLIFIER RATINGS

Filament voltage, E_f	6.3 volts
Filament current, I_f	0.8 amp.

* Triad Mfg. Co., Pawtucket, R. I.
** Coto Coil Co., Providence, R. I.

Bulb, ST-14	
Base, 6-prong medium	

NOMINAL RATING

Grid bias, E_c	0 volts
Plate voltage, E_b	300 volts
First plate current, I_{p1}	5.5 ma.
Second plate current, I_{p2}	45 ma.
Load resistance, Z_o, Single	7000 ohms
Push-pull	10,000 ohms (plate-to-plate)
Signal	15 volts, r.m.s.
Power Output,* Single	4 watts
Push-pull	10 watts

HI-E RATING, PUSH-PULL

Grid bias, E_c	13 volts
Plate voltage, E_b	400 volts
First plate current, I_{p1}	4 ma. per plate
Second plate current, I_{p2}	45 ma. per plate
Load resistance, Z_o	10,000 ohms (plate-to-plate)
Signal	60 volts, r.m.s. (grid-to-grid)
Output*	20 watts

PRACTICAL APPLICATIONS

The principles involved in the design of the Triadyne can be applied to solution of many problems involving the power driving of the larger output tubes with minimum power consumption at low distortion.

However, to get back to the more specific business at hand of putting the 6B5 to work in amateur equipment, we find upon examining Fig. 3 that a pair of 6B5's in the Hi-E (high-efficiency) circuit with 400-volt plate supply will give a power output of about 20 watts at 5% distortion—a nice little low cost modulator for a 210 Class-C r.f. amplifier. Four tubes in push-pull similarly would serve as modulators for a pair of 210's Class-C, with Class-A modulator quality.

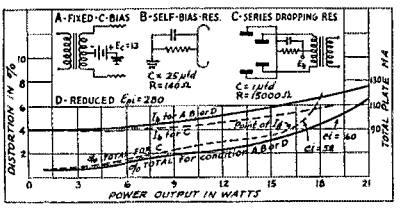

FIG. 3—HIGH-EFFICIENCY PUSH-PULL CONNECTIONS AND OPERATING CHARACTERISTICS FOR 6B5'S

Plate supply voltage, E_b, 400 volts; no-signal current per tube, first plate, I_{p1}, 4 ma.; second plate, I_{p2}, 40 ma. Load resistance, 10,000 ohms, plate-to-plate.

The Hi-E circuit mentioned above simply consists of the use of 400-volt plate supply as contrasted with the nominal rating of 300 volts. When a 400-volt supply is used, the driver plate current must be reduced proportionally by any one of the methods shown in A, B and C of Fig. 3. That is, by a fixed bias between the grid return and ground or by a 140-ohm automatic bias resistor by-passed by 25-μfd. low-voltage condenser, or by a current-limiting resistor of 15,000 ohms in the plate feed circuit. An examination of the load output characteristic (Fig. 4), led to the use of a pair of 6B5's in Hi-E as drivers for a pair of 203-A's in Class-B. The features of the 6B5 which warrant its use in such a power driver are as follows:

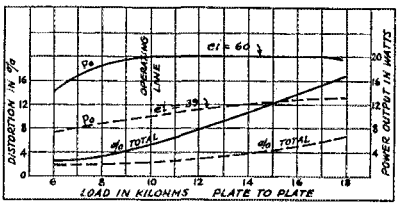

FIG. 4—LOAD CHARACTERISTICS FOR HIGH-EFFICIENCY CIRCUITS OF FIG. 3, PLATE VOLTAGE AND CURRENT VALUES BEING AS GIVEN FOR THAT FIGURE

1. Flat power output *vs.* load characteristic, which is important when driving a variable load such as 203-A's Class-B.
2. Low distortion rise with load resistance increase.
3. Comparatively high power-sensitivity.
4. Effectively automatic negative-bias input, which can work direct out of a voltage amplifier tube.

AMPLIFIER DESIGN

The driver-modulator shown in the accompanying photographs and diagrammed in Fig. 5 is constructed on a base board 10 by 32 inches with controls and a meter for reading both driver and Class-B plate current, mounted on a crystal finished Masonite panel 10 by 32 by ¼ inches. A 400-volt power supply is built on the same base board with the amplifier, the component parts being arranged to give minimum hum pick-up. The input transformer is mounted directly in back of the input terminals, and feeds directly to the 6B5 grids. A conventional power supply is used with no particularly drastic filtering necessary, because the 6B5 plates are fed push-pull and also because the plate current of the 6B5's in the Hi-E connection "talks up" only about 25 ma. at full output. All voltages for the power supply, as well as the filament voltage for the 6B5's and the 6.3 volts for the pre-amplifier stages, are obtained from a single transformer.

The coupling transformer from the output of the driver to the grids of the 203-A's is a rather husky affair designed to reflect back the proper load from the grids of the 203-A's to the plates of the Triadynes. The output transformer can be any standard transformer designed to reflect the proper Class-C load to the plates of the 203-A's.

*5% harmonic distortion.

PRE-AMPLIFIER

A rather neat feature of the entire modulator unit is the simple pre-amplifier which can be used. As mentioned before, Triadynes have the characteristics of a Class-A tube, insofar as the input is concerned; that is, no power need be supplied to the grid. For this reason, a 6C6 pentode feeding a second 6C6 connected as a triode supplies more than sufficient voltage gain to operate out of a crystal microphone. For instance, with a model D-104 Astatic microphone the gain control is run about ⅔ open for full output.

The pre-amplifier is mounted in a standard shield cabinet with gain and tone controls on the front panel. A pilot light, connected across the 6.3-volt supply for the filaments, indicates when the modulator unit is on. The filament and plate supplies are brought to the pre-amplifier by a four-wire cable from the modulator unit, minimizing magnetic pick-up within the pre-amplifier.

For the further reduction of hum a small choke, L_3, is located on the modulator unit in the positive lead to the pre-amplifier and an 8-μfd. electrolytic is across the supply within the pre-amplifier. Also, a 50,000-ohm filter resistor with a 0.5 μfd. condenser is used in the plate lead of the high-gain 6C6. In the complete job, from the microphone stage to the output tubes, there is no detectable hum.

OPERATING NOTES

At W1BMT this unit is used to modulate 100% a single 242-A run as a Class-C amplifier with about 250 mils at 1000 volts on the plate. Both the modulator and the Class-C amplifier are supplied from the same power supply. This is a rather conservative use, as the latest output ratings of 203-A tubes in Class-B with 1000-volt supply is 200 watts audio, or 260 watts with a 1250-volt supply. This amount of power

(Continued on page 84)

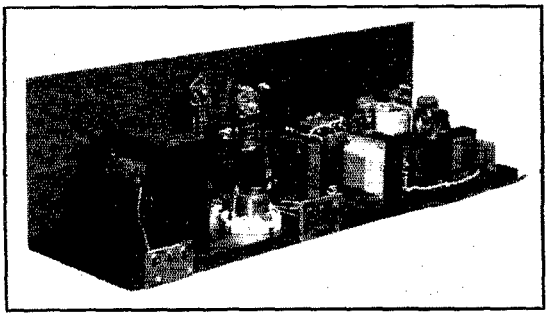

THE WORKS BEHIND THE PANEL OF THE DRIVER-MODULATOR UNIT

The Triad 6B5 driver tubes are at the extreme right, the rectifier of the 400-volt driver and pre-amplifier supply towards the center, and the 203-A Class-B stage at the left. Although the equipment appears crowded, hum and feed-back troubles are prevented by careful arrangement.

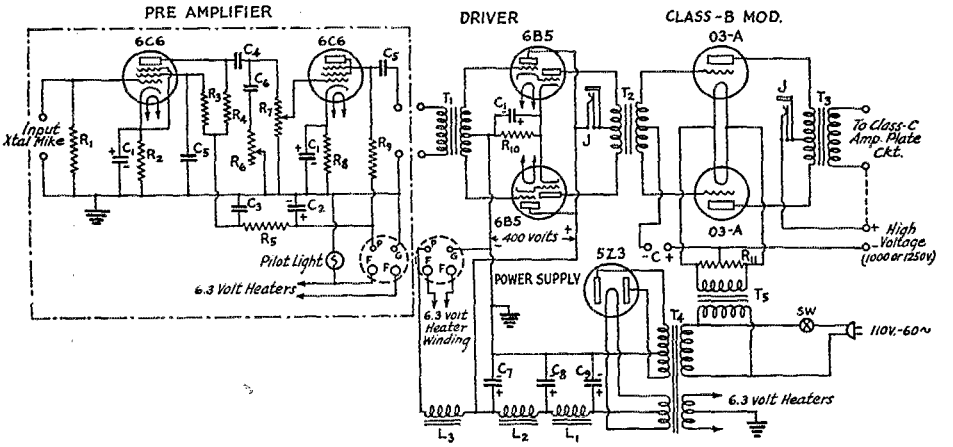

FIG. 5—COMPLETE CIRCUIT OF THE DRIVER-MODULATOR AND PRE-AMPLIFIER UNITS

R_1—*4 megohms.*
R_2—*1000 ohms.*
R_3—*2 megohms.*
R_4—*500,000 ohms.*
R_5—*50,000 ohms.*
R_6—*500,000-ohm tone control.*
R_7—*500,000-ohm volume control.*
R_8—*1000 ohms.*
R_9—*100,000 ohms.*
R_{10}—*140 ohms.*
R_{11}—*60-ohm center-tapped.*
C_1—*20-μfd. low-voltage electrolytic.*
C_2—*8-μfd. electrolytic.*
C_3—*0.5 μfd.*
C_4—*0.02 μfd.*
C_5—*0.1 μfd.*
C_6—*0.005 μfd.*
C_7, C_8, C_9—*Three-section electrolytic.*
L_1, L_2—*100-ma. filter chokes.*
L_3—*20 ma. filter choke.*
T_1—*Any good audio step-up transformer, about 3-1 turns ratio.*
T_2—*Coto C I 402 Triadyne output transformer.*
T_3—*Coto C I 403 Class-B output transformer.*
T_4—*Power transformer.*
T_5—*203-A filament transformer.*
J—*Plate meter jacks.*

Announcing

TRIPLETT

VOLT - OHM - MILLIAMMETER

IN KIT FORM!

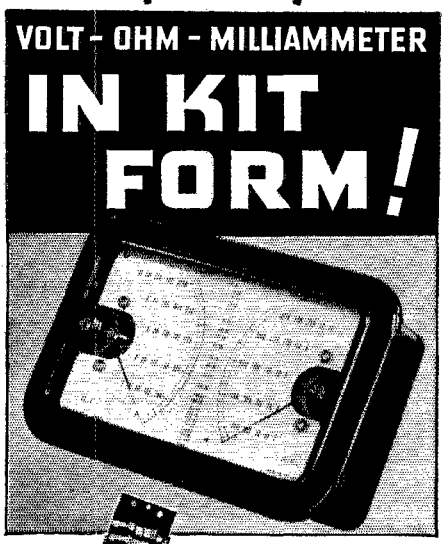

NO. 1200

SERVICE men who want to build their own equipment, or who want to use instruments that can be made to fit special space and installation requirements, will be particularly interested in Triplett No. 1200 Volt-Ohm-Milliammeter. Now, it is available in kit form, and is designed for use with built-in job equipment.

Every necessary item is included in this kit — and all assembly details have been carefully worked out. All you need is soldering iron and a pair of pliers. The complete kit includes these units:

Triplett Twin Meter, net	$10.33
Special Triplett Selector Switch, net	1.67
Shunt Board for 1-10-50-250 milliampere readings: 1500 ohms and 1.5 megohms, net	2.33
Resistor board for 10-50-250-500-1000 DC volts and 50-250-500-1000 AC volts and current limiting resistors for 1500 ohms and 1.5 and 3 megohms, net	4.83
.5 MFD Condenser for output measurements, net	.33
Rheostat Assembly, consisting of 65-6000-9000 ohm resistors for ohmmeter zero adjustments, net	1.67
Set of blue prints and instructions, net	.67
Hook-up wire, net	.33
No. 32 Triplett test leads, net	.50

SEE YOUR JOBBER

See this complete kit at your jobber's

Total price, complete kit, net to dealers $16.67

THE TRIPLETT ELECTRICAL INSTRUMENT CO.

125 Main Street Bluffton, Ohio, U. S. A.

chokes in circuits requiring the filament to be operated above ground potential. The current-carrying capacity of all three sizes is four amperes, so that the filament current of quite large tubes can be readily carried.

The new chokes are being marketed by Kaltman and Romander, 62 Court Street, Newark, N. J.

A.R.R.L. QSL Bureau

FOR the convenience of its members, the League maintains a QSL-card forwarding system which operates through volunteer "District QSL Managers" in each of the nine U. S. and five Canadian districts. In order to secure such foreign cards as may be received for you, send your district manager a standard No. 8 *stamped* envelope. If you have reason to expect a considerable number of cards, put on an extra stamp so that it has a total of six cents postage. Your own name and address go in the customary place on the face, and *your station call should be printed prominently in the upper-left-hand corner.* When you receive cards, you should immediately furnish your QSL manager with another such envelope to replace the used one. List of managers follows:

W1—Allen W. Jones, W1NW, 1626 Commonwealth Ave., Boston, Mass.
W2—H. W. Yahnel, W2SN, Lake Ave., Helmetta, N. J.
W3—R. E. Macomber, W3CZE, 418 10th St., N. W., Washington, D. C.
W4—B. W. Benning, W4CBY, 520 Whiteford Ave., Atlanta, Ga.
W5—E. H. Treadway, W5DKR, 2749 Myrtle St., New Orleans, La.
W6—C. E. Spitz, W6FZQ, Box 1804, Phoenix, Ariz.
W7—L. Q. Kelly, W7BPC, 4919 So. Prospect St., Tacoma, Wash.
W8—F. W. Allen, W8GER, 324 Richmond Ave., Dayton, Ohio
W9—George Dammann, W9JO, 319 Sherman Ave., Evanston, Ill.

VE1—J. E. Roue, VE1FB, 84 Spring Garden Rd., Halifax, N. S.
VE2—W. H. Oke, VE2AH, 5184 Mountain Sights Ave., N. D. G., Montreal, P. Q.
VE3—Bert Knowles, VE3QB, Lanark, Ont.
VE4—Dr. J. J. Dobry, VE4DR, Killam, Alberta.
VE5—E. H. Cooper, VE5EC, 2024 Carnarvon St., Victoria, B. C.

New High-Gain Audio Amplifier

(*Continued from page 47*)

is ample to modulate two 203-A's in Class-C.

When starting up the amplifier, snap on the control switch on the front panel and allow the cathodes to come up to temperature. Insert the meter plug in the Triadyne plate current jack and read the plate current. This should read about 90 milliamperes. Now turn on the r.f. am-

Flash!

We are now making prompt delivery of this exceptional receiver

The New PR–12

PATTERSON

All-Wave Radio

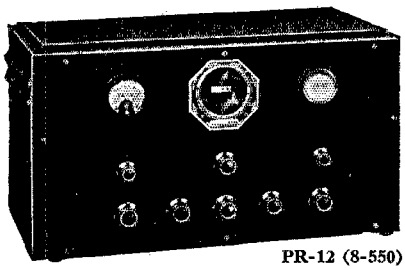

PR-12 (8-550)

Don't buy any receiver until you have tried the PR–12

Sold on five-day money-back trial

NET DELIVERED PRICES COMPLETE

(absolutely nothing else to Buy!)

PR-12 Crackle cabinet without crystal **$83.70**
PR-12 Crackle cabinet with crystal... **$89.70**
PR-12 Console without crystal **101.70**
PR-12 Console with crystal.... **107.70**

Chassis also available

SHIPPED PREPAID If Full Purchase Price Accompanies Your Order

MARINE 140B

100 WATT PHONE C.W. XMITTER

Many exclusive "MARINE" features ● Power Output (conservative rating) 100 WATTS PHONE and C.W. ● 20–40–75 and 160 meter bands ● CRYSTAL CONTROLLED FREQUENCY ● PERMANENT NEUTRALIZATION ● BUILT-IN BIAS SUPPLY ● HIGH-FIDELITY AUDIO CHANNEL ● Input Designed for Crystal Microphone
Self Contained Antenna Matching Network

VISUAL DISTORTION INDICATOR
MODULATION PERCENTAGE INDICATOR
(Built-in Cathode Ray Oscilloscope)
CABINET DIMENSIONS
(Baked wrinkled enamel finish — with rear door)
60" high 19½" wide 15" deep
ONE YEAR UNCONDITIONAL GUARANTEE

Send stamp for descriptive folder with detailed information and photographs. You will be astounded at what we are offering at such an extremely moderate price.

L. I. MARINE & ELECTRIC CO.

W2GOT — W2GRQ

163-18 JAMAICA AVENUE JAMAICA, NEW YORK

Telephones: JAmaica 6-2925, Night (long distance) LAurelton 8-0400

Cable Address: "ELECMARINE NEWYORK"

plifier and high voltage supply. Open the gain control slowly and, with the meter plugged into the Class-B plate circuit, read the plate current. With no signal, the static plate current should read about 25 ma. for both tubes. To obtain this current the Class-B modulator negative grid bias should be about 35 volts for 1000-volt plate supply and 45 volts with 1250-volt plate supply.

When the static plate current is adjusted, the gain control can be opened until, when whistling into the mike, the Class-B plate current rises to the proper value for the load. Checking back on the plate current of the driver stage, it will be found that the plate current of these tubes increases from about 90 to 100 ma. This is not an indication of distortion but is normal for the 6B5 in the Hi-E circuit.

In presenting this new type of radio tube, the authors have been able to hit only the high spots in this brief discussion. It is our sincere hope that the information set forth will enable the amateur to grasp the fundamentals of 6B5 operation and to aid the construction of a high-quality modulator at minimum cost.

Standard Frequency Transmissions

Date	*Schedule*	*Station*	*Date*	*Schedule*	*Station*
Mar. 1	A	W6XK	Apr. 5	B	W9XAN
Mar. 8	B	W9XAN		B	W6XK
	B	W6XK	Apr. 10	C	W9XAN
Mar. 13	C	W9XAN	Apr. 12	B	W9XAN
Mar. 15	B	W9XAN		A	W6XK
	A	W6XK	Apr. 17	BB	W9XAN
Mar. 20	BB	W9XAN	Apr. 19	BB	W6XK
Mar. 22	BB	W6XK		A	W9XAN
	A	W9XAN	Apr. 20	BX	W6XK
Mar. 23	BX	W6XK	Apr. 21	C	W6XK
Mar. 24	C	W6XK	Apr. 26	A	W6XK
Mar. 26	A	W6XK			

STANDARD FREQUENCY SCHEDULES

Time (p.m.)	*Sched. and Freq. (kc.) A*	*B*	*Time (p.m.)*	*Sched. and Freq. (kc.) BB*	*C*
8:00	3500	7000	4:00	7000	14,000
8:08	3600	7100	4:08	7100	14,100
8:16	3700	7200	4:16	7200	14,200
8:24	3800	7300	4:24	7300	14,300
8:32	3900		4:32		14,400
8:40	4000				

Time (a.m.)	*Sched. & Freq. (kc.) BX*
6:00	7000
6:08	7100
6:16	7200
6:24	7300

The time specified in the schedules is *local standard time at the transmitting station.* W9XAN uses Central Standard Time, and W6XK, Pacific Standard Time.

TRANSMITTING PROCEDURE

The time allotted to each transmission is 8 minutes divided as follows:

2 minutes—QST QST QST de (station call letters).

3 minutes—Characteristic letter of station followed by call letters and statement of frequency. The characteristic letter of W9XAN is "O"; and that of W6XK is "M."

1 minute—Statement of frequency in kilocycles and announcement of next frequency.

2 minutes—Time allowed to change to next frequency.

W9XAN: Elgin Observatory, Elgin National Watch Company, Elgin, Ill., Frank D. Urie in charge.

W6XK: Don Lee Broadcasting System, Los Angeles, Calif., Harold Peery in charge.

A New 100-Watt Type Zero-Bias Transmitting Tube

The 838 Class-B Modulator and R.F. Power Amplifier

ALTHOUGH designed primarily for use in Class-B audio power amplifier or modulator circuits in which a pair has power output capability of a quarter kilowatt or more, the new 838 triode just announced by RCA also offers particular operating advantages in r.f. oscillator and power amplifier services as compared to older types, such as the 203-A, of the same 100-watt plate dissipation rating. In fact, since it has generally similar circuit requirements, it can be used to replace the 203-A in most applications with no more than minor modifications in the set-up. The 838 takes the same socket as the 203-A, 211 and similar tubes, the same filament supply voltage and current, and has corresponding plate voltage ratings. The tentative general characteristics are as follows:

Filament voltage (a.c. or d.c.)	10 volts
Filament current	3.25 amperes
Direct interelectrode capacitances (Approx.):	
Grid-plate	8 $\mu\mu$fd.
Grid-filament	6.5 $\mu\mu$fd.
Plate-filament	5 $\mu\mu$fd.
Bulb	T-18
Base	Jumbo 4—Large Pin

CLASS-B AUDIO POWER AMPLIFIER AND MODULATOR

The 838 is especially interesting as a Class-B modulator in which service it operates at zero bias. The grid is designed so that the amplification factor of the tube varies with the amplitude of the input signal. The ratings, and experimental tests, show that the tube has the desirable feature of requiring even less driving power than the 203-A. Tests using a pair of these tubes have been made with the modulator unit shown in the photograph, the driver stage using a pair of 2A3's and the Class-C amplifier being an 849 operating with 500 watts input at a plate voltage of 2000 volts. The modulator plate voltage used was 1250 volts, at which the 838's have a rated audio output of 260 watts—which output they deliver without any difficulty.

The schematic circuit of the modulator is the same as that for the 203-A's (given previously in several *QST* articles) with the exception that the secondary center-tap on the input transformer is connected directly to the filament center-tap and minus B, rather than to a bias source.

Maximum ratings and typical operating conditions for Class-B audio service are as follows:

D.c. plate voltage		1250	max. volts
Max. signal d.c. plate current (per tube)*		175	max. milliamperes
Max. signal plate input (per tube)*		220	max. watts
Plate dissipation*		100	max. watts
Typical operation (2 tubes):			
Filament voltage (a.c.)	10	10	volts
D.c. plate voltage	1000	1250	volts
D.c. grid bias voltage	0	0	volts

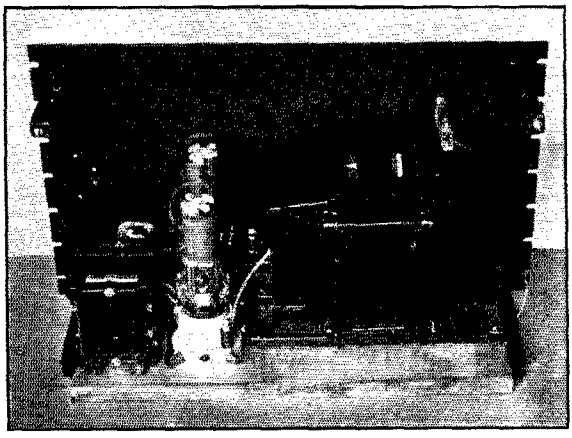

THE TEST MODULATOR USING TYPE 838 TUBES

Peak a.f. grid input volt. (approx.)	90	90	volts
Zero-sig. d.c. plate cur. (per tube)	53	74	milliamperes
Max.-sig. d.c. plate cur. (per tube)	160	160	milliamperes
Load resistance (per tube)	1900	2800	ohms
Effective load resistance (plate-to-plate)	7600	11,200	ohms
Peak driving power (approx.)	5	5	watts
Max. sig. power output, approx. (2 tubes)	200	260	watts

* Averaged over any audio-frequency cycle.

As a result of the zero grid bias characteristic of the 838, grid current is drawn on any input signal. Hence, the input transformer can be designed for operation under approximately uniform loading conditions so as to give excellent frequency response. Of course it should also be designed to handle the required input power for the strongest signal. With a pair of 2A3's in a push-pull driver, the input transformer turns ratio

(Continued on page 74)

HAVE YOU A

LOG BOOK

for Your Portable Operation?

The present log meets all requirements. You will find it better to have a separate log for your portable work.

40¢ Each
Three for $1

THE AMERICAN RADIO RELAY LEAGUE
WEST HARTFORD, CONNECTICUT

More DX

with the New Stromberg-Carlson MICROPHONE

Speech clear enough to cut through QRM and QRN. That is the result of using this new Mike. An entirely new and more efficient design of the single button carbon type, it is available in the two styles illustrated. *Write for details.*



No. 6 $3.95

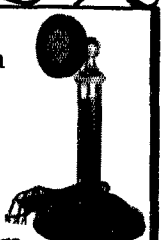

No. 5 $12.00

Stromberg-Carlson

Stromberg-Carlson Telephone Mfg. Co.
Rochester, N. Y.

The New 838

(*Continued from page 27*)

recommended is 3.2, primary to one-half secondary. Since this is the same ratio ordinarily used with 203-A tubes, the present input transformer in a 203-A set up will be exactly suited. The grid current, incidentally, is nearly linear with grid excitation and practically proportional to power output over most of the operating range. Hence, the grid meter makes an excellent volume-level indicator, showing full power output for a total grid current of approximately 40 ma. with pure tone input and speech power output of corresponding amplitude at half this current value. (See remarks on modulation metering under "Technical Topics" elsewhere in this issue.)

On the output side, the rated load requirements are somewhat different from those given for the 203-A, it will be noticed, although there is sufficient tolerance in the characteristics of these tubes to permit the use of the usual 203-A output transformer without serious sacrifice of undistorted power output capability. At least this has been found so with the modulator previously mentioned and shown in the illustration.

R.F. APPLICATIONS

There is nothing unusual about the tube in either Class-B or Class-C r.f. circuits except that its grid characteristics permit the safe use of grid-leak bias in Class-C amplifiers, since the plate current drops to a safe value in case of loss of excitation. The recommended r.f. ratings and operating conditions are tabulated as follows:

R. F. Power Amplifier—Class B Telephony:

Carrier Conditions per tube; for use with a modulation factor up to 1.0 (100%).		
D.c. plate voltage	1250	max. volts
D.c. plate current	150	max. milliamperes
R.f. grid current	6	max. amperes
Plate input	150	max. watts
Plate dissipation	100	max. watts
Typical operation:		
Filament voltage (a.c.)	10	10 volts
D.c. plate voltage	1000	1250 volts
D.c. grid voltage	0	0 volts
D.c. plate current	130	106 milliamperes
Peak r.f. input grid voltage (approx.)	60	58 volts

(*Continued on page 90*)

Air-Mass Conditions

(*Continued from page 18*)

suitably located ultra-high frequency radio transmitters and recorders as an added tool for the meteorologist. Appropriate ultra-high frequency radio links, particularly if operated on a group of frequencies, possibly could serve to advance our knowledge of the continually changing structure of the lower atmosphere.

ACKNOWLEDGMENT

Without the suggestions, advice and cooperation of Dr. C. F. Brooks of the Blue Hill Observatory of Harvard University, these observations would not have been possible, while without the additional data made available by Mr. G. W. Pickard we would have been greatly handicapped. Thanks are due to Professor H. W. Mimno at

Greater Economy in Class-B Modulator Design for Speech

A Speech-Amplifier-Modulator Unit for the General Purpose Transmitter

By George Grammer*

IN PLANNING Class-B modulation systems to work with plate-modulated Class-C amplifiers, we have become accustomed to thinking in terms of the type of audio wave-form which most readily lends itself to calculation—the simple sine wave of a single pure tone. Analysis of amplitude modulation on this basis leads to the familiar conclusion that the audio power required to modulate completely the output of a Class-C amplifier must equal half the plate input to the modulated amplifier. In determining the capabilities of tubes as Class-B audio amplifiers, too, the sine wave customarily is used for calculation of power output and plate dissipation.

As a basis for the design of a modulation system for a broadcast transmitter, the sine-wave method leads to results approximating the actual conditions encountered in music transmission. Amateur transmitters, which have in general been laid out along the same lines, are however intended for the transmission of speech only. The wave-form of speech bears little resemblance to the sine form, and practical measurements have shown that speech wave-forms having the same *peak* amplitude as a sine wave will contain considerably less energy than the latter. It has been demonstrated that from a power standpoint speech can be considered to be equivalent to two pure tones of equal amplitude and random frequency, each having a peak amplitude half that of a single sine wave with which the speech is to be compared, i.e., a sine wave having a peak amplitude equal to that of the speech wave-form.[1] Consideration of the two tones against the single tone under the conditions specified shows that the average power in the circuit with the two tones is only half that with the single tone. Although all speech obviously cannot be exactly equivalent to the two tones, nevertheless the assumption is sufficiently justified in practice to enable us to say that *for voice modulation the average audio power required is only half that needed for single tone modulation.*

Two inferences of some importance can be drawn from this statement. The first is that our present Class-B modulators have approximately twice as much power capability as is needed. Much of the overmodulation now prevalent in the 'phone bands results from the attempt on the part of the operator to make the Class-B modulator plate current rise to the rated value with speech. When this is done, extensive overmodulation invariably results—the audio power being supplied is about twice what it should be. Checks against the oscilloscope on a considerable number of transmitters have shown that complete modulation takes place when the plate meter reads only about half the rated value based on sine-wave input.

The second inference, the one with which this article is concerned, is that since less power is needed than has been thought in the past, it ought to be possible to use smaller Class-B modulators for a given job. On a power basis alone there would seem to be no room for argument on this premise; however, modulation of a transmitter is not the same thing as lighting a lamp. In addition to power, there is also distortion to be considered. When investigating the capabilities of Class-B modulator tubes it is necessary to take into account faithfulness of reproduction as well as such factors as filament emission

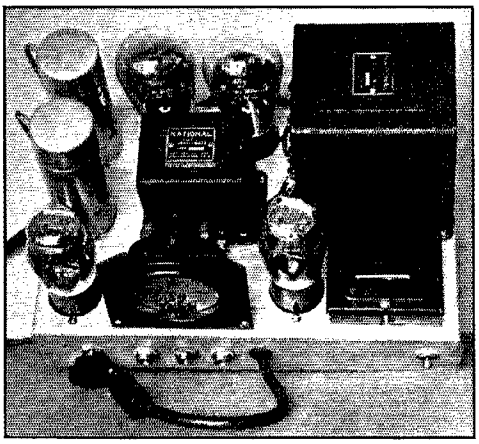

THE UNIT CONTAINS A CRYSTAL-MICROPHONE SPEECH AMPLIFIER, DRIVER AND CLASS-B MODULATOR, AS WELL AS A POWER SUPPLY FOR THE LOW-POWER STAGES

While the 46's in the Class-B stage normally would be considered to have an audio output in the vicinity of 20 watts, for speech work they can readily be made to modulate a Class-C input of 80 watts, as explained in the text.

* Assistant Technical Editor.

[1] Technical Topics, *QST* June, 1935.

and allowable plate dissipation, on which power output figures are based. The requirement of faithful reproduction profoundly influences the design of the modulator on the half-power basis.

Modulation is essentially a process involving variation of *amplitudes*. Regardless of the average power contained in the sidebands, for complete modulation it is necessary that the carrier amplitude be doubled on the modulation up-peak and reduced to zero on the down-peak. On the up-peak, therefore, the instantaneous peak power is still four times the carrier power, although the wave-form may be such that the *average* power is only half that with pure-tone modulation. In other words, then, the modulator must still be capable of delivering the same *peak* power regardless of wave-form.

To satisfy this requirement and at the same time work within permissible distortion limits, the modulator must be *capable* of supplying pure-tone audio power to the extent of half the carrier input power. Even though this power capability is never used with speech input, the amplitude requirements are such that the modulator must work over the same range as with sine-wave input; it merely so happens that the *average* power with speech is only about half the *average* power in a sine-wave. Taking an actual case to illustrate the point, assume that a Class-C plate input of 100 watts is to be modulated. With pure-tone modulation the audio power required is 100/2, or 50 watts. This is the average power in a modulating wave of sine shape which on its up-peak will increase the carrier power to four times normal. With voice modulation the same peak must be reached without distortion, requiring an amplitude capability equal to that of a 50-watt sine-wave modulator. But during the cycle in which the peak is reached, the *average* audio output of the modulator will only be in the neighborhood of 25 watts. It should be evident that a modulator having a sine-wave output of 25 watts will not give the same peak power as the 50-watt modulator, and therefore cannot be used to modulate a Class-C amplifier input of 100 watts. Considerable distortion would result from an attempt to do so, since the modulator grids would have to be driven over a greater range than that for which the modulator is designed.

The question then becomes one of determining

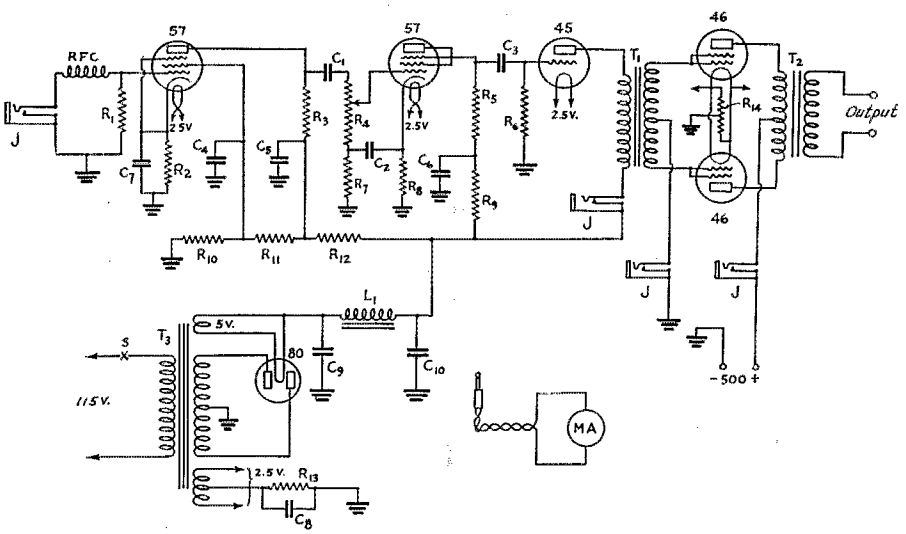

FIG. 1—CIRCUIT DIAGRAM OF THE SPEECH AMPLIFIER AND CLASS-B MODULATOR

The power supply furnishes plate and filament power for the first three tubes only; the Class-B stage must be supplied from a separate source. If a power transformer having an additional 2.5-volt winding is used, filaments of the 46's may be heated from the second winding.

R1—5 megohms, ½ watt.
R2—3500 ohms, ½ watt.
R3—250,000 ohms, ½ watt.
R4—500,000-ohm volume control.
R5—50,000 ohms, 1 watt.
R6—0.5 megohm, ½ watt.
R7—0.1 megohm, ½ watt.
R8—2250 ohms, 1 watt.
R9—10,000 ohms, 1 watt.
R10—50,000 ohms, ½ watt.
R11—250,000 ohms, ½ watt.
R12—50,000 ohms, ½ watt.
R13—1500 ohms, 2 watt.
R14—20-ohm center-tap resistor
C1—0.1 μfd., 400-volt.
C2—0.1 μfd.
C3—0.1 μfd., 400-volt.
C4, C5, C6—2-μfd. electrolytic, 400-volt.
C7, C8—10-μfd. electrolytic, 25-volt.
C9, C10—8-μfd., electrolytic, 400-volt.
T1, T2—Class-B input and output transformers: (National Type BI and BO respectively). The input transformer should have a turns ratio, total primary to one-half secondary, of 2:1. Output transformer turns ratio should be between 1.05:1 and 1.3:1, total primary to total secondary.
T3—Midget power transformer, 275 volts each side center-tap with 5-volt and 2.5-volt windings. (Thordarson type T-5002.)
L—22-henry, 35-ma. filter choke (Thordarson type T-1892).
J—Single closed-circuit jacks.
MA—0-200 d.c. milliammeter.
RFC—Short-wave choke (National type 100).

what, if anything, can be saved in modulator design, knowing that although the average power required is but half that with single-tone input, the peak requirements are exactly the same. The opportunity for economy in design lies in the fact that somewhat less tube capacity is required with voice modulation than with tone, since in the Class-B modulator the input varies with the output, and, assuming a given safe plate dissipation, there is at least a possibility that a pair of tubes can be made to modulate twice the Class-C input previously considered possible. This follows from the experimentally determined fact that the average power input with voice modulation is only about half the input with tone modulation, for the same degree of modulation on a given carrier. Since the two-tone equivalent of speech represents half the power of the equal-amplitude single tone, the evidence justifies the assumption that the efficiency in both cases is approximately the same; that is, the plate dissipation would be no greater with 25 watts of speech output than with 25 watts of single-tone output. Hence a pair of tubes capable of 25 watts of single-tone output can be used to modulate with speech 100 watts of Class-C amplifier input, provided the operating conditions can be arranged so that the necessary peak amplitude can be obtained without distortion. Briefly, this condition can be satisfied only when the operating conditions are such that, disregarding plate dissipation, the pair of tubes *could* supply 50 watts of undistorted single-tone modulation if it were necessary to do so.

It can readily be appreciated that such a saving applies only to Class-B modulators, where the plate input, and hence dissipation, is a function of the modulating signal. In Class-A systems nothing can be done, since the power ratings have to be based on the no-signal condition, during which the plate must dissipate the entire d.c. input. It is also doubtful whether much could be gained in Class-AB amplifiers unless worked well toward the Class-B end.

MODULATOR DESIGN

Because of the variable and complex nature of speech wave form, none of this discussion is readily demonstrable by mathematical analysis. An infinite number of results can be obtained, depending upon the particular wave form chosen as a starting point. It is necessary, therefore, to depend upon experimental results for confirmation of the assumptions made. It was for this purpose that the modulator unit shown in the photographs was built. As mentioned previously, checks on a number of transmitters had demonstrated that the average plate input to the Class-B stage with speech was only about half that with tone modulation; it remained to find whether the thing could be worked backwards; to use, for example, a pair of tubes normally rated at 25 watts audio output to modulate a Class-C input of 100 watts.

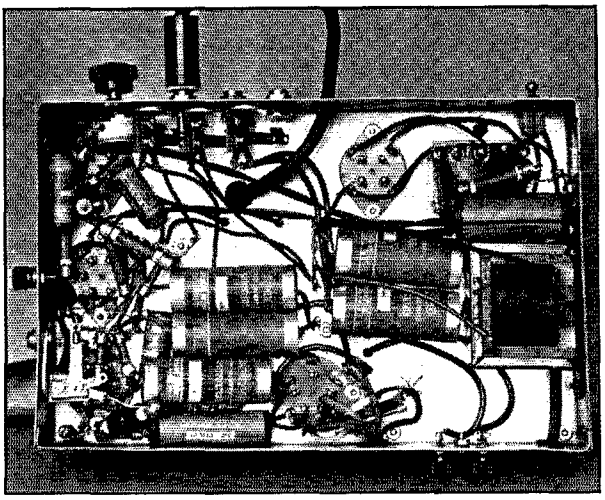

UNDER THE MODULATOR UNIT CHASSIS

The binding post on the left wall of the chassis is the ground post; below it is the microphone jack. The binding posts at the bottom right are the output terminals from the secondary of the modulation transformer. The filter choke is on the right wall. The top (front) wall contains the gain control, jacks for reading driver plate current, Class-B amplifier grid and plate currents, and the on-off switch for the power supply.

The actual figures used were not these, but were very close to them. The modulator was built to be used with the general purpose transmitter described in January *QST*,[2] using a pair of 801 tubes at normal input—600 volts at 140 ma. for the pair, or 84 watts. Ordinarily this would have called for a modulator having an output of 42 watts. On the speech basis, however, a pair of tubes which could handle something over 20 watts might do the work. Since a pair of Type 46 tubes carries better than a 20-watt rating at normal voltages, it was decided to base the design on these tubes.

The first step in the process was to find, from the published characteristics, whether a set of operating conditions could be worked out to give a pure tone output of 42 watts without exceeding permissible distortion limits, permissible peak current ratings, and without exceeding twice the safe plate dissipation of the pair of tubes. The first two are definite limits, while the third assumes that with speech the plate input and

[2] "A General Purpose 50-Watt Transmitter," *QST* January, 1935

plate dissipation will be but half the maximum sine-wave value, so that in practical operation the safe plate rating is not overstepped. A little study of the tube characteristics showed that the conditions could not be met at normal plate voltage—400 volts—but that when the plate voltage was raised to 500 the necessary power could be obtained without particular difficulty. Without going into details, we shall simply state that at 500 volts the theoretical power required (42 watts) could be obtained by using per-tube load resistances varying between about 1200 and 1900 ohms, the latter giving best plate efficiency and the former slightly less distortion and requiring somewhat less driving power. The peak current ratings were not exceeded between these load limits. Calculation showed that with voice input the average plate current at 100% modulation should be in the vicinity of 70 to 80 ma., depending on the load resistance chosen. The driving power required was within the capabilities of a single Type 45 tube. It is evident that the only way in which the tube ratings were exceeded was in the plate voltage increase from 400 to 500 volts, which, having the manufacturers' usual conservatism in mind, we did not consider very serious.

A modulator and speech-amplifier unit designed for working from a crystal microphone was accordingly laid out. Suffice to say that its performance has borne out the assumptions on which its design is based. Using a Class-B output coupling transformer of suitable impedance ratio (total-primary to total-secondary between 1.1:1 and 1.65:1 is satisfactory), the oscilloscope showed that the carrier was completely modulated when, with typical voices, the Class-B plate meter kicked in the region of 80 ma. Steady-state measurements are difficult to make when voice input is used, but the results have been consistent enough to permit us to say that with this particular set-up a maximum Class-B plate current of that order represents 100% modulation.

It should be pointed out that the conclusions apply only to the particular tubes considered. Whether the same result could be achieved with other modulator tubes depends upon the characteristics and ratings of those tubes. Each type would have to be analyzed individually. In general, however, doubling up on the carrier input for a given modulator will require an increase in the modulator plate voltage, an increase in driving power, and perhaps also a change in the output transformer ratio. The same general method of investigation should be used.

MODULATOR UNIT CONSTRUCTION

The complete modulation system of course consists of a microphone and speech amplifier in addition to the Class-B modulator and its associated driver. The amount of speech amplification required will be determined by the grid requirements of the driver stage and the output of the microphone. In this case the driver stage requires a peak grid swing of 50 volts; the speech amplifier has been designed to produce this voltage from the output of the diaphragm-type crystal microphones now so widely used in amateur transmitters. While the output of these microphones varies somewhat from make to make it can be taken as being in the vicinity of 0.05 to 0.1 volt across several megohms at the grid of the first tube with normal voice intensity and "close talking". Under these conditions a speech amplifier voltage gain of approximately 1000 (60 db) is required. The speech amplifier in the unit pictured here, a diagram of which appears in Fig. 1, uses a 57 pentode first stage having a rated gain of 100, and a 57 triode-connected second stage having a gain of about 14, giving a total gain of approximately 1400.

It should be pointed out here that the selection of the speech amplifier tubes and circuits was based on talking close to the microphone. Full modulation of the transmitter can be obtained by speaking in a normal tone of voice with the lips within a few inches of the microphone, but it cannot be done from across the room or from a distance of a foot or two. The gain is limited intentionally, since it is our experience that close talking is desirable for amateur 'phone work, especially with crystal microphones, because the ratio of voice to extraneous noises is highest under these conditions, and because room reflections, with their damaging effect on naturalness, are less pronounced. Those who prefer to sit back in comfort with the microphone some distance away will require more amplification. Probably this had best take the form of a separate head amplifier using a triode giving a gain of ten or so, working into a tube—to—line transformer which can be matched by a line-to-tube transformer at the modulator unit input. A suitable type of preamplifier has been described in *QST*.[3]

The chassis upon which the unit is constructed is a stock item, available at most radio stores, measuring 7 by 11 by 2 inches. The first 57 in the speech amplifier is at the rear left corner; midway on the left-hand edge is the second 57, with the 45 at the front left. The Class-B input transformer is behind the meter panel, with the 46 tubes directly behind. The Class-B output transformer occupies the rear right corner. The small power transformer for the speech and driver tubes is at the front; beside it is the 80 rectifier.

Before the chassis was laid out, some tests were conducted to determine whether serious hum pickup would result from mounting the power transformer so near the audio transformers, and it was found that with the transformers in the respective positions shown the hum in-

(*Continued on page 78*)

[3] DeSoto, "A Transportable 10-watt Public Address System," *QST* December, 1934.

PEAK X-4 10 WATT 5 METER X-MITTER

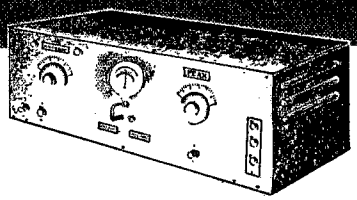

A *PEAK* PRODUCT AGAIN GOES TO BAT FOR THE HAMS!

Development of the X-4 has produced a low priced transmitter that has all the qualities of an expensive broadcast rig.

Come on fellows, check this instrument and see if it isn't just the job you have been waiting for.

- Two stages of audio amplification
- Class B modulation
- Unity coupled oscillator
- Input gain control
- Milliammeter to read oscillator and modulator current
- Communications switch
- For double or single button mike
- Encased complete in steel cabinet, less power supply, beautifully finished in black crackle
- Any specified ultra-high frequency to order
- Amateur net $26.70 complete, less tubes and power supply

PEAK P-11 PRE-SELECTOR operates on any type receiver. Enthusiastic owners can tell you of the marvelous S.W. reception in store for users of the P-11. Amateur net $19.80.

PEAK Q-5, 2½-5-10 meter five-tube Super-het receiver. Amateur net $21.60.

PEAK M-2 MONITOR is necessary with any radio telephone x-mitter. Amateur net $19.80.

All PEAK PRODUCTS are unconditionally guaranteed to give absolute satisfaction

Complete descriptive data now awaiting your request

Write to Dept. A

EASTERN RADIO SPECIALTY CO.

Mfrs. of PEAK PRODUCTS

1845 BROADWAY NEW YORK, N. Y.

Slide
RESISTORS



Wire-wound. Crack-proof ceramic tube support. Sliding band contact (extra bands available). 10, 30, 50, 75, 100 and 200 watt ratings. All resistance values. Removable mounting brackets.

- Write for resistor and condenser catalog.

AEROVOX

CORPORATION

73 Washington St., Brooklyn, N. Y.

this issue.) We hope some points in the above may answer questions for the newcomer on "how it is done." For those "breaking-in" may we say that any O.R.S., Trunkliner or experienced A.R.R.L. traffic handler will be only too glad to answer your questions and give additional pointers both in procedure and concerning your station apparatus and arrangement to help you make yours a really effective communications set-up. Since experience is the only real teacher, we conclude by suggesting to all and sundry that becoming proficient in any branch of the game is partly just a matter of practice. Start a few messages, to get accustomed to the form. Check some messages to become familiar with land-line check, now the official A.R.R.L. check. You will find increased enjoyment in this side of amateur radio by adding to your ability to perform; by your familiarity with these things the chance of being able to serve your community or country in emergency will be greater and credit will be reflected on amateur radio as a whole.

—*F. E. H.*

Class-B Modulator Economy

(Continued from page 18)

duced in the output transformer was only a fraction of a volt, while no perceptible hum was induced in the input transformer. Different orientation of the power transformer with respect to the output transformer brought the hum up considerably. Although the measurements were made with the aid of an oscilloscope, practically as much can be learned about hum by connecting a pair of 'phones to one of the audio transformer windings and applying 110 volts to the primary of the power transformer. The difference in hum pick-up can readily be checked by changing the relative positions of the two transformers.

The filter shown in the diagram has been found to be ample for eliminating hum in the plate circuits. This consists not only of the two 8-μfd. electrolytic condensers C_9 and C_{10} and their associated filter choke, L_1, but also of the individual series resistors in the plate circuits of the first two tubes plus the plate by-pass condensers. On the first tube R_{12} and C_5 serve as the elements of a resistance-capacity filter, while additional filtering is provided in the screen circuit by the dropping resistor, R_{11}, and C_4, the screen by-pass condenser. On the second tube, R_9 and C_6 function as a filter. R_{12} and R_9 further serve as decoupling resistances to prevent feedback between the two stages.

Aside from the necessity for avoiding short-circuits and unwanted grounds to the metal chassis—not altogether unknown when a large number of parts are put into a small space—the only precaution which it has been found necessary to observe is that of keeping the screen of the 57 pentode at the proper potential. The voltage divider R_{10} and R_{11} serves this purpose. Too-high screen voltage not only reduces gain but causes distortion and may result in oscillation of the speech amplifier at the higher gain control settings. Although it would be desirable to decouple the grid circuit of the 57 pentode in a similar

WHICH "TICKET"

are You Going After—

Amateur?

Commercial?



When you enter the Inspectors' office for the purpose of taking any examination necessary to obtain a License, wouldn't you like to go in with that feeling of absolute CONFIDENCE which always accompanies genuine ABILITY?

Famous Candler Students

McElroy — official speed 77 wpm., fastest op of all-time. Jean Hudson, 9 yrs. old, Champion of World in Class "E." Watson, WIBGL, Byrd Expedition.

What Amateur and Commercial Radio Operators Can Do with the Help of the

CANDLER SYSTEM

They can make perfect copies of WNU press with pencil or "mill"; can cut mimeograph stencils directly from WNU, WHD and KUP press; can copy press 3 to 5 words behind easily without losing out; can count checks automatically and OK copy instantly; can send perfect code groups with key or bug at 30 to 35 wpm. and more.

FREE "BOOK OF FACTS for RADIO OPERATORS" is yours for the asking. Write TODAY.

CANDLER SYSTEM CO., Dept. Q-8

6343 So. Kedzie **Chicago, Illinois**

Just what you've wanted!

WRIGHT-DECOSTER

Metal Cabinet Speakers

for the Amateur who demands results

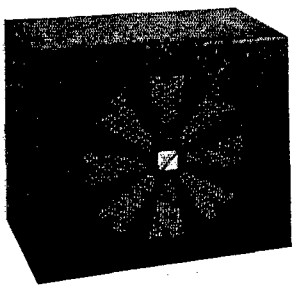

Model 880 Equipped with 6" Dynamic Speaker with Universal Transformer to match all output tubes, 2500 ohm field. List Price..... **$8.80**

Model 980 Equipped with 8" Dynamic Speaker with Universal Transformer to match all output tubes, 2500 ohm field. List Price..... **$9.80**

Cabinets finished in black crystalline. Size, 9" high, 10" wide.

Model 470 A.C. Field Supply

Furnishes necessary field excitation for A.C. operation of the above models. So designed as to fit into the housing perfectly. List Price..... **$4.70**

Write for dealer's discount, catalog and name of nearest distributor. Wright-DeCoster distributors are always anxious to cooperate with you.

WRIGHT-DECOSTER, Inc. 2259 University Ave. St. Paul, Minn.

manner to that used in the 57 triode grid circuit, this was deemed inadvisable because it would necessitate working both sides of the microphone above ground. Unless one side of a high-impedance microphone can be connected to ground there is an excellent likelihood that considerable hum will be picked up.

In the second stage the screen, suppressor and plate of the 57 are connected together to act as a triode plate. The volume control is in the grid circuit of this tube, since this is the first point at which overloading is likely to occur. There is no danger that the output of the crystal microphone will overload the grid of the first 57. On the other hand, if higher-gain microphones are used, or if additional pre-amplification is introduced, it might be advisable to put the gaincontrol in the grid circuit of the first 57. Transformer coupling could be used out of the plate circuit of the 57 triode, with possibly an increase in gain, but in this case space considerations precluded its use. There is also some chance that feed-back would occur with the additional transformer.

Jacks are provided for microphone input and for reading plate currents in the 45 and 46 stages, and for reading grid current in the 46 stage. The secondary terminals of the output transformer have been simply brought out to a pair of terminals so that any desirable type of coupling can be used. With the particular transformer used (chosen because its variable output ratio permits adjustment to fit the particular conditions) simply connecting the secondary in series with the Class-C amplifier plate supply gives perfectly satisfactory results. However, coupling through a condenser and choke, to keep the direct current out of the transformer secondary, should result in some improvement in reproduction.

So far as construction itself is concerned, there is little to be said except that it is desirable to plan the layout so that the parts can be worked into place as logically as possible. The leads to the amplifier grids should be encased in grounded shields. "Hot" leads to the volume control also are shielded; this may or may not be necessary, but at any rate the shielding does no harm and may possibly prevent feedback and hum pickup. Liberal use of insulated mounting lugs and rubber grommets obviates a great deal of the danger of short circuits and facilitates the mounting of resistors and condensers. The photographs show the placement of the main parts quite clearly; the others are simply worked in where they fit. Naturally some crowding has to be done, since a great deal of material has to go into a rather small space.

If the values are duplicated and care is used in wiring, there should be no trouble in getting the unit to "perk". In the transition from a circuit diagram to the actual amplifier, only two points caused us any trouble; distortion in the second stage was quickly cleared up when it was found that the cathode terminal of the socket inadvertently touched a grounded point, and distortion and oscillation in the first stage were



Mr. E. H. Rietzke, President of CREI and originator of the first thorough course in Practical Radio Engineering.

"Good Intentions" won't get you a Good Job!

You have to be "TECHNICALLY QUALIFIED" to get to the top in Radio today. This fast-growing industry demands that the GOOD jobs go only to TECHNICALLY TRAINED men, who have kept pace with Radio by intensive training. The hundreds of CREI men who now hold responsible engineering jobs PROVE that radio executives recognize the superiority and ability of CREI-trained men.

RIGHT NOW . . . WRITE NOW
FOR FREE ILLUSTRATED CATALOG

This booklet will answer every question and fully describe our courses and 3 plans of study . . . as well as show you how easy it is to pay for them.

CAPITOL RADIO
ENGINEERING INSTITUTE
14th and Park Road, N. W. Dept. Q-8
WASHINGTON, D. C.

CREI

DYKANOL

CORNELL-DUBILIER again leads the field by its introduction to the hams, of a series of capacitors that are the latest in condenser design.

Striking compactness, higher dielectric strength and constant, with marked economy are the outstanding features of Dykanol Hi-voltage x-mitting condensers.

Also . . . . . .

- **DYKANOL is non-inflammable.**
- **DYKANOL x-mitting condensers are hermetically sealed.**
- **DYKANOL condensers cannot be affected by high temperatures.**

Type TC 30020
2MFD 3000V.D.C.
Your cost . . .
$13.53
At all C-D authorized distributors.

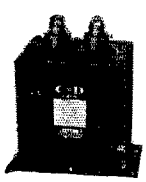

Get your copy of the new No. 128 catalog describing Dykanol x-mitting condensers in complete detail.

CORNELL-DUBILIER
CORPORATION
4373 BRONX BOULEVARD
NEW YORK

eliminated when the screen voltage divider specified was installed in place of a series dropping resistor first tried. No other changes or adjustments were found necessary.

Working into the normal Class-C amplifier load—600 volts, 140 ma., or approximately 4300 ohms—the output taps on the transformer are set at Nos. 1 and 5, giving an impedance ratio of 1.33:1 from total primary to secondary. This corresponds to a turns ratio of 1.15–1 and makes the per-tube load resistance in the Class-B stage slightly over 1400 ohms, a suitable value. As previously mentioned, the Class-B plate current at 100% modulation is approximately 80 ma.; that is, the plate current should not swing above 80 ma.; as indicated by the plate meter, during speech. Grid current should be between 10 and 20 ma. under the same conditions. It is desirable, of course, that the plate supply for the Class-B stage have good regulation.

During modulation the plate current to the Class-C stage should show no change. With normal speech the antenna current rise will be of the order of 5%, which, as has been pointed out in these pages previously [1], is about all that should be expected at 100% modulation with voice input and an ordinary thermo-meter. If all these conditions can be satisfied, there need be no fear that the transmitter is not being modulated properly—and up to the full legal limit.

Adjusting the 'Phone

(Continued from page 86)

ment or any other effective current or voltage indicating device will show both the increase due to modulation and carrier shift at the same time and there is no way of separating them. Also, these methods of indicating modulation are almost worthless on anything but steady tone because of the inherent inertia of thermo-instruments.

CLASS-B LINEAR R.F. AMPLIFIERS

When more power is wanted, resort is usually had to some form of linear amplifier. Now just because a Class-B r.f. amplifier is operated at the recommended grid and plate voltages, it does not necessarily follow that the dynamic output characteristic will be linear as must be the case if the output is to be undistorted. In fact the contrary is usually true. Output impedance and grid bias will determine almost completely the shape and degree of linearity of the dynamic output characteristic. While it is usually recommended that Class-B amplifier be biased to cut-off, for instance, it is found that a bias slightly less than cut-off value is likely to yield greater over-all linearity. The effect of bias will be seen from the characteristics shown in Fig. 3. The best operating bias is the one which yields the dynamic characteristic having the longest straight portion. Likewise, the characteristics illustrated in Fig. 4 show the effect of output impedance on linearity.

The most ideal way in which to choose the operating conditions of bias and output im-

A 50-Watt Audio Amplifier-Modulator With Beam Tube Output

Theory and Practical Operation of the New 6L6

By George Grammer,* W1DF

APPARENTLY the idea of confining the electrons flowing in the evacuated space inside a tube to directed beams is not of such recent origin, but, as always, it remained for someone with a practical bent to make a good theory into a better tube. This has been done by O. H. Schade, of RCA Radiotron, and a beam power tube designed by him has been added to the metal-tube series, carrying the designation 6L6. Primarily, the tube was developed to meet the low-distortion and high-power-output requirements of high-fidelity home reproduction; incidentally, it also fits nicely into the amateur picture. Among the appealing characteristics of the 6L6 are audio-power outputs up to 60 watts from a pair of tubes with only 400 volts on the plate, plate efficiency comparable to that of a good Class-B system although the tubes actually are operated Class-AB, high-power sensitivity, and negligible distortion in suitable circuits.

Amateurs usually are more concerned with what a tube will do rather than why it does it, but aside from the intriguing idea of "beaming" the electrons, the 6L6 has some highly interesting design features. To put the thing in a nutshell, the new beam power tube, although a tetrode, represents an advance in design which approxi-

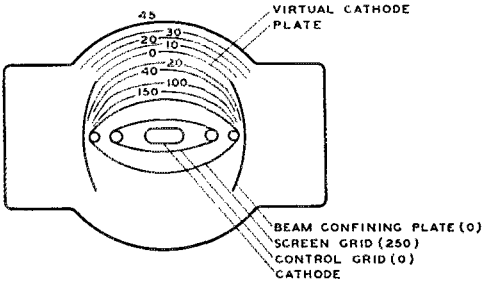

FIG. 1—A TOP VIEW OF THE ELEMENT ARRANGEMENT IN THE 6L6

mates the ideal pentode—one with perfectly straight plate-voltage plate-current characteristics, permitting full utilization of the tube's capabilities before distortion of the output waveshape becomes a factor. The 6L6 is free from secondary plate emission effects to an even greater extent than the suppressor-equipped pentode.

* Assistant Technical Editor.

The element arrangement of the 6L6, as viewed from the top, is shown in Fig. 1. The inner (control) and outer (screen) grids are elliptical in shape. At the ends of the grids are metal plates, internally connected to the cathode, which act as deflectors. Since the deflector plates are at



METAL-TUBE SPEECH UNIT WITH PUSH-PULL 6L6 OUTPUT

This four-stage amplifier will deliver an audio output of approximately 50 watts with negligible distortion, in conjunction with the power supply shown in another photograph. The gain is sufficient for the popular diaphragm-type crystal microphone.

zero potential, electrons are not attracted to them but flow to the plate in two wedge-shaped beams. The semi-circular plate sections are the only parts of the plate to receive electrons; the remainder of the plate is useful only as a mechanical support and as a heat radiator. The concentration of electrons into two beams gives extremely high electron density in the space between the active portions of the plate and the other tube elements. The contour lines represent equipotential surfaces within the tube. It will be noticed that the deflector plates are placed so that their edges coincide with a zero-potential surface.

From the side, a cut-away section of the tube would look something like Fig. 2. The control and screen grids have the same number of turns per inch, the screen wires being lined up exactly behind the control-grid wires. "Lining-up" is an innovation in tube design; the reason for it can be explained by reference to Fig. 2. Assuming that the control grid is negative, electrons emitted

from the cathode will be repelled by the negative grid, causing them to be compressed into sheets flowing between the grid wires. The velocity of the electrons carries them on through the screen mesh. Lining-up, plus critical spacing of screen with reference to control grid and plate, makes the screen an effective accelerator, but causes

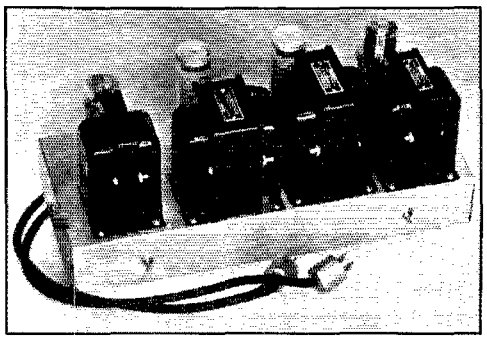

THE TWO POWER SUPPLIES ARE MOUNTED ON THE SAME TYPE OF CHASSIS AS THE SPEECH AMPLIFIER

One supply, using ordinary receiver components, furnishes plate and filament power for all tubes except the 6L6's. The comparatively heavy drain of the latter is handled by a choke-input plate supply and a special filament transformer.

the screen current to be quite low, since comparatively few electrons strike the screen wires. The overall efficiency of the tube is therefore increased.

After passing through the screen the electrons spread out somewhat as indicated in Fig. 2. The high electron density resulting from beaming causes the formation of an electron barrier in the space between screen and plate, so that secondary electrons are repelled back into the plate. In effect, therefore, there is an electronic suppressor within the tube, its characteristics being such that it offers no impedance to the flow of primary electrons to the plate, but completely prevents secondary electrons from returning from plate to screen. An optical analogy would be a lighted room on a dark night—it is possible to see clearly into such a room from outside, but an observer on the inside looking out can see nothing.

The electronic suppressor, by eliminating the grid mesh of the usual wire suppressor, removes one cause of undesired curvature in tube characteristics. Beaming, in similarly eliminating the distorting effects of grid supporting rods, removes another.

6L6 CHARACTERISTICS

The straight plate-voltage plate-current curves of the 6L6 make the output of the tube remarkably free from high-order harmonic distortion. In comparison with the ordinary pentode plate family, these curves, instead of bending gradually downward at low plate voltages, continue straight until a critical plate voltage is reached, whence they drop off suddenly. The fact that the drop occurs at very low plate voltage accounts for the increased efficiency of the 6L6 over conventional types, since for a given static plate voltage and plate current the tube can be swung over a greater range before distortion starts. The characteristics, however, are still those of a pentode-type tube, with the usual tailing-off of plate current as the grid bias is made more negative. For this reason the second-harmonic distortion is high in a single-tube amplifier, even though the third and higher-order harmonics are negligible. With push-pull, however, the second harmonic is eliminated, leaving an amplifier with substantially no distortion.

A wide range of selection of operating conditions is available to give different power outputs and various amounts of distortion. The single-tube ratings are probably of little interest to amateurs, since the second-harmonic distortion is high. This can be overcome by suitable amplifier design, but as we see it, for the present at least, the real field for this tube in amateur radio is as a modulator of moderate power or as a driver for high-power Class-B modulators. The operating data given below are therefore for two tubes in push-pull.

The heater of the 6L6 takes 0.9 amp. at 6.3 volts. Maximum rated plate voltage is 400; maximum screen voltage, 300. As a push-pull Class-A amplifier the following operating conditions are recommended:

	Fixed Bias	*Self-Bias*
Plate voltage	250	250 volts
Screen voltage	250	250 volts
Grid bias	−16	−16 volts
Peak a.f. grid-to-grid voltage	32	35.6 volts
Zero-signal d.c. plate current	120	120 ma.
Max.-signal d.c. plate current	140	130 ma.
Zero-signal d.c. screen current	10	10 ma.
Max.-signal d.c. screen current	16	15 ma.
Load resistance (plate to plate)	5000	5000 ohms
Max.-signal power output	14.5	13.8 watts
Distortion: total	2	2 per cent
3rd harmonic	2	2 per cent

Several sets of operating conditions may be used with a pair of 6L6's in a Class-AB amplifier. Those following are for excitation without drawing grid current—in other words, no power is required from the preceding amplifier.

Plate voltage	400	400	400	400 volts
Screen voltage	250	250	300	300 volts
Grid bias, fixed	−20	−20	−25	−25 volts
Peak a.f. grid-to-grid voltage	40	40	50	50 volts
Zero-signal d.c. plate current	88	88	100	102 ma.
Max.-signal d.c. plate current	126	124	152	156 ma.
Zero-signal d.c. screen current	4	4	5	5 ma.
Max.-signal d.c. screen current	9	12	17	12 ma.
Load resistance (plate-to-plate)	6000	8500	6600	3800 ohms
Max.-signal power output	20	26.5	34	23 watts
Distortion: total	1	2	2	0.6 per cent
3rd harmonic	1	2	2	0.6 per cent

If grid current is drawn, imposing the requirement that the driver stage be capable of supplying some power, the

following operating conditions are typical:

Plate voltage	400	400 volts
Screen voltage	250	300 volts
Grid bias, fixed	−20	−25 volts
Peak a.f. grid-to-grid voltage	57	80 volts
Zero-signal d.c. plate current	88	102 ma.
Max.-signal d.c. plate current	168	230 ma.
Zero-signal d.c. screen current	4	6 ma.
Max.-signal d.c. screen current	13	20 ma.
Load resistance (plate-to-plate)	6000	3800 ohms
Peak grid input power	180	350 milliwatts
Max.-signal power output	40	60 watts

Under these last sets of operating conditions, the distortion will depend primarily upon the driver stage, the distortion introduced by the 6L6's amounting only to about 2 per cent if driver distortion and the effects of resistance in series with the grid circuit are absent. For lowest distortion the effective driver impedance, as looked at from the 6L6 grids, should be low.

The wide range of operating methods makes the 6L6 adaptable to practically any application where audio power outputs upwards of ten watts are required. In fact, tube manufacturers feel that this tube will replace existing power-output tubes in almost all types of broadcast receivers. The high power-sensitivity, the fact that outputs up to 30-odd watts may be secured without grid current, and the triode-like characteristic of being quite tolerant of plate-loading, likewise make the tube an ideal one for amateur speech amplifiers and modulators.

A PRACTICAL AMPLIFIER

The 6L6 speech-amplifier unit and accompanying power supply shown in the photographs can be considered to be a general purpose affair, in that substitution of a suitable output transformer makes it adaptable both as a complete modulator and as a driver for Class-B units employing anything up to a pair of 204-A's. The voltage gain to the grids of the 6L6's is more than sufficient for crystal microphones of the diaphragm type, a peak input of about 0.005 volt being sufficient to drive the final tubes to full output. The input stage uses a 6J7 (equivalent to the 57 or 6C6) pentode; this tube is resistance-coupled to a 6C5 triode intermediate amplifier. The driver consists of a pair of 6C5's in push-pull, transformer-coupled to the preceding stage. The 6C5's are capable of delivering sufficient power for excitation of the 6L6 grids. The input transformer, T_2, is specially designed for the purpose. The 6L6 output transformer, T_3, also is a special job, arranged with a tapped secondary to work into loads of 2500, 5000 or 7500 ohms for modulation purposes; its turns ratio is such that the plate-to-plate load on the 6L6's is 3800 ohms.

The low-level speech-amplifier section needs no particular comment, since it is practically identical with several layouts described previously in *QST*. It occupies the left-hand section of the chassis; the bottom view indicates that the various resistors and condensers are placed in the most convenient locations. The design of the whole unit is, in fact, perfectly straightforward. The microphone jack is on the back of the chassis near the 6J7 tube; the first 6C5 is at the front left-hand corner, with the gain control conveniently situated. To its right is the single-tube to push-pull coupling transformer; back of the coupling transformer are two electrolytic bypasses, C_6 and C_7, followed by the push-pull 6C5's. The input and output transformers, as well as the 6L6's, are readily identified. The jack for measuring 6L6 plate current is mounted on the back of the chassis, along with a stock two-terminal strip for the output.

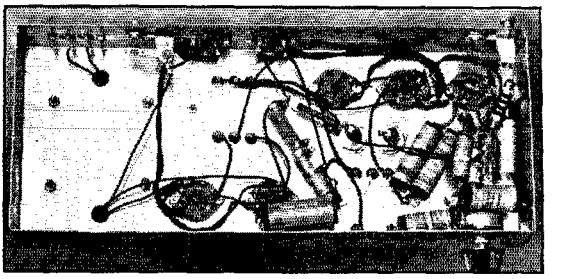

BOTTOM VIEW OF THE SPEECH AMPLIFIER CHASSIS
A discussion of the layout will be found in the text.

Suitable power supply for the amplifier presents a few problems. Although the tubes operate at low voltage, the high-power output is not obtained for nothing—the plate current necessarily is high. Theoretically, it is necessary to have a plate supply for the 6L6's capable of delivering better than 200 ma. at 400 volts; furthermore, this supply should have good regulation if the voltage is to stay within safe limits for electrolytic filter condensers. Ordinary broadcast replacement transformers are out of the question. After some perusing of catalogs, it was decided to feed the outfit with two power supplies, one for the 6L6 plates and the other for everything else, including the 6L6 screens. This made possible the elimination of a voltage divider on the 400-volt supply, thus lightening its load. The final arrangement uses a broadcast transformer rated to give 300 volts at 55 ma., with all tubes except the 6L6's getting their filament power from this transformer; a second plate transformer rated to give 400 volts (with a choke-input filter) at 100 ma. continuously and 200 ma. intermittently; and a third transformer to heat the filaments of the 6L6's and an 83 rectifier. An ordinary condenser-input filter with one choke (this choke is mounted underneath the power-supply chassis) is used on the 300-volt supply. The 400-volt supply has choke input, with the two sections of a double-8 electrolytic condenser in parallel across the output.

The fixed bias for the 6L6's is obtained from the 300-volt supply. Reference to Fig. 4 will show that there is no ground on the negative side of the 300-volt supply (outlet A). The total current from this supply is made to flow through the right hand section of R_{15} (Fig. 3) to ground; by means of the adjustable tap on R_{15} the bias voltage is set at 25 volts. R_{14} is a bleeder resistor to load the 300-volt transformer to full capacity. It is desirable to do this so that the current through R_{15} will be as heavy as possible, thus maintaining the bias fairly constant even though grid current flows. R_{13} drops the voltage to the proper value for the speech-amplifier plates.

The power terminals on both speech and power-supply units are four-prong tube sockets. Connections are made by means of four-wire cables with plugs at each end.

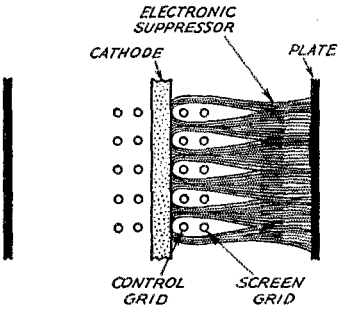

FIG. 2—VERTICAL SECTION OF THE 6L6, SHOWING THE FORMATION OF THE ELECTRONIC SUPPRESSOR

be exactly 300 volts, since the plate current is quite sensitive to changes in screen voltage—considerably more so than to changes in plate voltage.

With the values given in the circuit diagrams, the whole system is perfectly stable (a ground connection must be used, of course) and the hum level is negligible. Should the hum increase perceptibly when the microphone plug is inserted, it will be necessary to shield the grid cap of the 6J7.

Measured output of this combination at the point just below where perceptible distortion begins was approximately 45 watts. This represents a steady-state condition with a sine-wave signal, however, and thus put a heavy load on the power supply, the output voltage of which dropped to between 350 and 375 volts. Power-supply regulation, together with the fact that

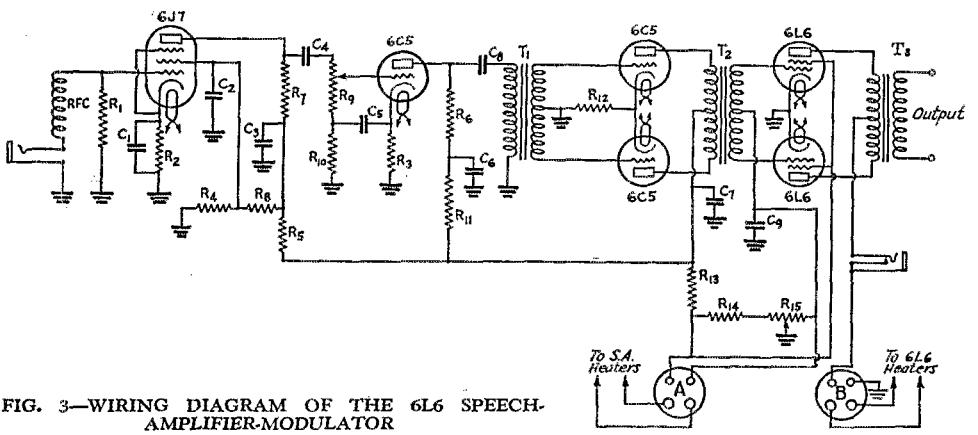

FIG. 3—WIRING DIAGRAM OF THE 6L6 SPEECH-AMPLIFIER-MODULATOR

C1—10-μfd., 25-volt electrolytic.
C2, C3—2-μfd., 200-volt electrolytic.
C4—0.1-μfd. paper, 400-volt.
C5—0.5-μfd. paper (or larger).
C6, C7—4-μfd., 400-volt electrolytic.
C8—0.25-μfd. paper, 400-volt.
C9—25-μfd. electrolytic, 50-volt.
R1—5 megohms, ½ watt.
R2, R3—3500 ohms, ½ watt.
R4, R5, R6—50,000 ohms, ½ watt.
R7, R8—0.25 megohm, ½ watt.
R9—0.5-megohm volume control.
R10—100,000 ohms, ½ watt.
R11—10,000 ohms, ½ watt.
R12—500 ohms, ½ watt.
R13—2500 ohms, 1 watt.
R14—15,000 ohms, 10-watt.
R15—1000 ohms, 10-watt.
T1—Audio transformer, single plate to push-pull grids, ratio 3:1 (Thordarson T-5741).
T2—Input transformer for coupling push-pull 6C5's to 6L6 grids (Thordarson T-8459).
T3—Output transformer, 3800-ohm load, plate to plate, see text (Thordarson T-8470).

A few words about operation: Provided the values given are followed, the only adjustment to be made is that of the bias on the 6L6's. Preferably, this should be done with the aid of a high-resistance voltmeter, with everything except the 400-volt plate transformer turned on. However, if no such voltmeter is available, a method which works about as well is to set the tap on R_{15} so that the plate current to the 6L6's is slightly over 100 ma. If this latter scheme is to work, however, it is essential that the screen voltage

the ratings in the tables previously given are for the tubes only and do not include unavoidable losses in the output transformer, probably accounts for the difference between actual measured output and the theoretical 60 watts which should be available. Observation with the aid of the oscilloscope showed that with voice input the average plate current rises only to about 130–140 milliamperes to give the same peak output. It is safe to say, therefore, that the output for voice work is in the vicinity of 50 watts; certainly there

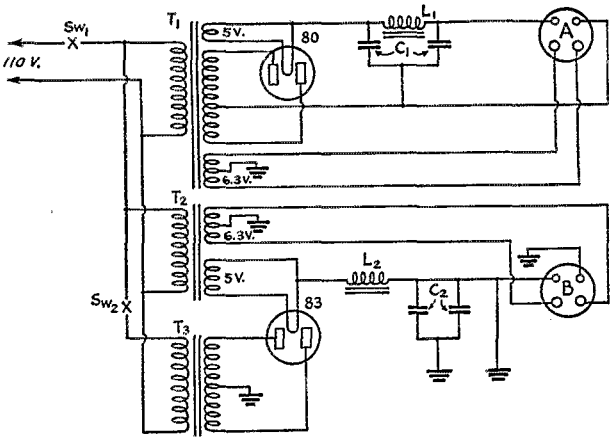

FIG. 4—DIAGRAM OF THE POWER-SUPPLY UNIT

T_1—Receiver power transformer; high-voltage winding to deliver app. 325 volts d.c. at 50 ma.; 5-volt, 2-amp. rectifier winding; 6.3-volt, 1.5-amp. filament winding (Thordarson T-7078).
T_2—Filament transformer, 5 volts at 3 amps., 6.3 volts at 2 amps. (Thordarson T-7984).
T_3—Plate transformer, to deliver 400 volts at 100 ma. through choke-input filter (Thordarson T-5503).
L_1—50-ma. filter choke, 30-henry commercial rating.
L_2—Input choke, 26 to 12 henrys, 250 ma. (Thoradson T-7551).
C_1, C_2—Double 8-μfd. dry electrolytics, 450-volt.
SW_1, SW_2—S.p.s.t. toggle switch.

is plenty of audio power to modulate a Class-C amplifier running with 100 watts plate input.

It is interesting to note that with the same 3800-ohm load impedance it is possible to secure about 20 watts of audio without running into grid current on the 6L6's. The distortion under these conditions is less than 1 per cent. A pair of 6L6's is thus about equivalent to a pair of 46's in Class-B—but can be excited by a voltage amplifier, whereas the 46's would require a driving source capable of delivering a watt or so to the grids.



DIXIE JONES' OWL JUICE

AMATEUR Radio Club meetings ain't run right. I ain't been to um all everywhere but what I been to makes me sick. I go to one of um hopin' to see somebody I know and clear hooks with him or meet some mug I ain't met yet and git acquainted with him and see what he looks like and what's goin' on inside of his conk, and vice versy, and what happens? Wye, doggone it, everybody has to set around on a hard chair and squirm for two hours keepin' still a listenin' to a long winded "business meetin'" that could just as well have took up half the time it did, or less, as it don't amount to a hill of beans anyway. And then they have some guy with long hair in from the outside to talk about "parasitic oscillations" or sumpn and he rambles on for another hour and a half over everybody's head and nobody has the nerve to throw a chair at him. He finally exhausts himself, his subject and his audience and sets down and the club president reluctantly turns everybody loose. By that time it's late, but you still can't visit with nobody yet as you got the refreshments to eat, which is a winnie and a bottle of bellywash, and you can't talk to nobody with your face full of winnie. So what? Wye, you gobble this puppy quick and shove off home and when you git there you git a growl from the ever loving OW for checking in later than you led her to believe you would, and you crawl into the hay and snooze off still wondering who was the strange hams at the meeting and promising yourself that some day soon you'll try to get around to see some of the old friends you saw there and have a chat with them. You can't do it at a radio club meeting. They take up all the blame time with "old business" and "new business" and this guy "makes a motion" and that guy "makes a motion" and what they need is some big guy about seven feet high to git up and make a motion with a club and scatter these half dozen guys that's going to run the club anyway and might as well do it some other time when they're off by theirselves and not botherin' nobody. Shucks. I got a blame good notion to git me up a radio club of my own and run it right. If I did I wouldn't have no officers and no committees and no minits of the last meeting and rising votes of thanks and "the Chair recognizes the gentleman from McDaniel Street" and all such time-killing, ham-squelching tommyrot. I'd just lettum in and turnum loose. I betchy they'd like it.

—W4IR of the "Dixie Squinch Owl"

Strays

When you want to keep your schedules at a "borrowed" station while away from home traveling or visiting, why not take along your own crystal? It automatically puts you on the frequency known to your correspondent, right at the old pencil-mark on his dial. He won't even have to know that you're away from home—you have his ear when he hears himself called on the old familiar frequency at the appointed hour.

Class-B Audio Design

A Simplified Method for Determining Correct Operating Conditions

By Earl I. Anderson,* W8UD

A REVIEW of the principles involved in Class-B operation seems to be in order because a knowledge of the fundamental principles is essential if proper operation is to be realized. This is particularly true if the voltages or tubes, or both, are not the ones specified in the operating data furnished with the transformers. The amateur is usually forced to use as much of the equipment at hand as possible when changes are made. He can not always, for example, purchase new power supplies if the ones at hand deliver voltages slightly higher or lower than the optimum values, nor does he wish to purchase new Class-B transformers when he replaces his modulator tubes with other types, if it is at all possible to use the ones he has.

On the other hand, it is extremely important to have the audio equipment working properly. Harmonic content or distortion must be kept at the absolute minimum. Every one wishes flat frequency response, yet frequency response from an amateur standpoint should be a secondary consideration to low harmonic content. A signal with low harmonic content, whether it has wide-range frequency response or not, will occupy only the minimum amount of territory necessary for voice communication, but a station with high harmonic content will spread and splash into adjacent channels and unnecessarily interfere with other signals. Even if an amateur did not care particularly how good his quality might be, he would owe it to other amateurs to keep his signal as *clean* as possible—and any improvement in this respect will necessarily improve the quality.

In speaking of distortion, we do not refer to frequency discrimination but to distortion of the wave form. Such distortion results in the generation of frequencies which are harmonics or multiples of the input frequency. Harmonics may be kept at a minimum if all of the tubes in the speech equipment are operating under proper conditions. They may originate in the low-level speech equipment as well as in the modulator stage, but improperly-operated modulators—and this applies to Class-A as well as Class-B—are chiefly responsible in so great a proportion of the cases that the factors involved are worthy of the consideration of every amateur.

TRANSFORMER OPERATION

Except for overmodulation, the commonest source of distortion is an overloaded modulator or one where the reflected load impedance is incorrect. Many amateurs seem to have a mistaken conception of the operation of an audio transformer. Audio transformers act exactly as do power transformers. The principles are exactly the same although, of course, the requirements are different. Perhaps this fact has been overlooked because power transformers are rated in terms of voltage and current while audio transformers are spoken of in terms of impedance or impedance ratios. It is sometimes assumed that if the secondary of an output transformer is marked 2500, 5000, 10,000 ohms or some other value, that the secondary is of that definite value regardless of any other considerations; and that if that secondary is terminated in a load of any other resistance or impedance, there will be a loss in power or fidelity. In other words, there will be a mismatch between secondary and load. Such is not the case. There is never any mismatch between secondary and load nor without any other qualifications is the impedance of the secondary the value marked on the secondary. If the primary is open and the secondary impedance measured, it should theoretically be infinity, and in any event will be many times the value marked on it. What the transformer manufacturer is trying to say is that with the specified modulator tubes, operating at the specified plate voltage and for the output specified, the secondary should be terminated in a load whose resistance or impedance is the value stamped on the secondary. If the modulator plate voltage is higher or lower, or if more or less output is required, the value probably would be different.

The purpose of a Class-B output transformer is to take the power developed by the modulators, which has a certain ratio of voltage to current, and change it to the ratio of voltage and current required at the secondary. If this ratio is correct it is said that the impedances are properly matched, because the ratios are expressed in terms of impedance. Under these conditions the power efficiency of the modulator will be the maximum obtainable with low distortion. If the ratios are not correct, one or more undesirable effects which will be discussed later will be evident.

The primary reflected load impedance depends upon the turns ratio of the transformer and the value of the impedance or resistance in which the secondary is terminated. If we had a transformer with the same number of turns on both primary

*Consulting Engineer, Taylor Tubes, Inc., Chicago, Ill.

and secondary, the turns ratio would be 1 to 1 and the impedance ratio would also be 1 to 1. If we were to measure the impedance of either winding with the other winding open, the impedance would be some very high value; but if we connected a 5000-ohm resistor across the secondary and then measured the primary impedance we would find it to be 5000 ohms also. If the resistor across the secondary were changed to 2500 ohms, the primary impedance would also be 2500 ohms. If the transformer had twice as many turns on the secondary as on the primary, the turns ratio would be 2/1, or 2, and since the impedance ratio is the square of the turns ratio, the impedance ratio would be the square of 2, or 4. In this case, if we put a 5000-ohm resistor across the secondary and measured the primary impedance it would be one-fourth of 5000 or 1250 ohms. Similarly, if we put a 10,000-ohm resistor across the secondary, the primary impedance would be 2500 ohms. We are assuming that there are no losses in the transformer, a permissible assumption because in well-designed units the losses are small enough to be ignored.

THE CLASS-B PLATE CIRCUIT

The circuit of Fig. 1 is the circuit for all Class-B tubes. The components and operating potentials are varied to suit the tubes, but the circuit stays the same. The tubes are biased to

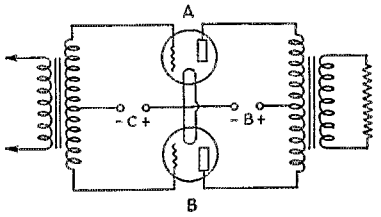

FIG. 1—THE ESSENTIAL CLASS-B AUDIO CIRCUIT

cutoff, or nearly so. So far as audio is concerned, the centers of both input and output transformers are at ground potential. If a.c. is applied to the primary of the input transformer, at any given moment the phase of the voltage applied to tube *A* will be opposite to that applied to tube *B*. For instance, when tube *A* is being driven positive, tube *B* is being biased further negative and being cut off entirely. On the other half of the cycle, tube *B* is driven positive and tube *A* is cut off entirely. From this it may be seen that only one tube works at a time and for this reason only one tube need be considered when making the necessary calculations.

So far as the tube is concerned the primary of the output transformer is a resistance, so the circuit for one tube might be drawn as shown in Fig. 2. A certain proportion of the supply voltage may be developed across R_p. It is impossible to develop all of the supply voltage across R_p because some voltage is required at the plate of the tube to attract enough electrons from the filament to permit the necessary plate current to flow. Also, the grid must never become positive with respect to the plate. In general, approximately 80 per cent of the applied voltage may be developed across R_p. The power developed will depend upon the current as well as the voltage and may be calculated by

$$\frac{(I_{p_{max}})^2 \times R}{2}$$

where $I_{p_{max}}$ = peak plate current to one tube.
R = reflected load impedance to one tube (one-fourth plate-to-plate value)

We can also calculate according to the following expression, substituting E_{R_p} (peak developed voltage) for R

$$\frac{(I_{p_{max}}) \times (E_{R_p})}{2}$$

Let us assume that the plate-supply voltage is 1000 and that the drop across the tube is 200 volts. This would permit us to develop 800 volts peak across R_p. Let us also assume that the maximum recommended peak plate current is 0.5 ampere. 800/0.5 = 1600 ohms reflected load impedance for one tube. The correct plate-to-plate load would be four times that value, or 6400 ohms. The audio output would be

$$\frac{0.5^2 \times 1600}{2} = 200 \text{ watts}$$

Now let us assume that the wrong value of load impedance had been used, say 2500 ohms per tube instead of 1600. With 800 volts across 2500 ohms, the peak plate current would be 800/2500 or 0.320 amp.

$$\text{Power} = \frac{0.320^2 \times 2500}{2} = 128 \text{ watts audio output.}$$

From this it should be obvious that if the reflected load impedance is too high, the amount of power obtainable *without distortion* will be reduced.

On the other hand, suppose the reflected load impedance is lower than the optimum value of 1600 ohms—say 1200 ohms—and we require 200 watts of audio. Using the formula and solving for the unknown, we have

$$\frac{(I_{p_{max}})^2 \times 1200}{2} = 200 \text{ watts}$$

$$(I_{p_{max}})^2 = \frac{200}{600}$$

$$(I_{p_{max}})^2 = 0.333$$

$$I_{p_{max}} = 0.577 \text{ amp.}$$

With the correct value of reflected load impedance the peak plate current was only 0.5 amp., but now 0.577 amp. is necessary for the same output. As we mentioned previously, the recommended maximum peak plate current for this hypothetical tube was 0.5. The extra 77 ma. of peak plate current may introduce distortion and shorten tube life. In addition, the plate dissipation will be increased. In the previous case, with 800 volts developed across the plate load and a peak current of 0.5 amp., the plate dissipation at peak plate current would be 200 × 0.5 or 100 watts. In the second case, we are developing 0.577 × 1200 = 692 volts and the plate dissipation at peak plate current would be 308 × 0.577 = 178 watts. If plate dissipation is one of the limiting factors the tube will be badly overloaded.

THE IMPORTANCE OF IMPEDANCE MATCHING

This should answer the often-asked question of how important it is to match impedances. The situation may be summarized by saying that if the reflected load impedance is too high, the maximum power output without distortion will be reduced, although the efficiency will be good and the harmonic content low. If an attempt is made to obtain more power with excessive drive to the grids, the distortion will increase tremendously. The peak output, which is the important consideration in modulation, will not increase greatly but the average power may be increased considerably because of alteration of the wave form. For this reason, even though it may be impossible to obtain enough peak power to modulate 100 per cent, it may appear from the action of the meters that the capabilities of the modulators exceed 100 per cent modulation if no facilities are available for examining the waveform. The spurious frequencies due to the distortion will also make it appear at a receiving point as though the signal were overmodulated when, in fact, the voltage output from the modulator is insufficient to swing the carrier from zero to twice its unmodulated value—the requirement for complete modulation.

When the reflected load impedance is too low the situation is about as bad. The power efficiency of the modulator stage is reduced and the plate dissipation increased. If, in attempting to develop the necessary power and voltage, it is necessary to drive the plate current of the tube to a point where the filament emission is exceeded, the distortion will be high and tube life will be shortened. The effects of the distortion will be the same as if the reflected load impedance were too high, and it may or may not be possible to modulate 100 per cent.

In general, a variation of approximately 10 per cent from the optimum value is about the maximum permissible if best performance in all respects is to be obtained.

It is important to remember that the optimum value of reflected load impedance varies with the output desired and the applied voltage. For example, for an audio output of 200 watts from a pair of 203-A's with 1000 volts on the plates, optimum performance would be secured with a plate-to-plate load of 6900 ohms. If only 100 watts of audio were required, the optimum

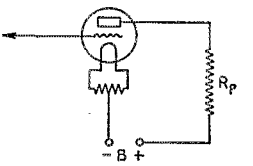

FIG. 2—EQUIVALENT CIRCUIT OF ONE CLASS-B TUBE

The load resistance, R_p, is one-fourth the plate-to-plate value.

plate-to-plate load would be twice that value or 13,800 ohms. If 200 watts were desired and the plate voltage were 1250, the optimum value of reflected load impedance would be 11,800 ohms. Because there are so many variables and because the consequences of improper operation are so serious in our crowded bands, it is extremely important that each amateur be able to make the necessary calculations. Fortunately these are easily made with the simplest of mathematics. Knowing the optimum value of reflected load impedance for the available plate voltage and desired output, as well as the impedance ratio of the output transformer, it becomes a matter of simple ratios. Assume the optimum value is 10,000 ohms and the transformer is marked 8000 ohms on the primary and 5000 on the secondary. The ratio would be

$$10{,}000/X = 8/5$$
$$8X = 50{,}000$$
$$X = 6250$$

Thus the load resistance of the modulated amplifier should be 6250 ohms. The plate input to the modulated amplifier should be twice the audio output of the modulator.

DETERMINING OPERATING CONDITIONS

At least one tube manufacturer is publishing complete Class-B data for various outputs at various plate voltages for each type of tube, but common practice is to provide only one or possibly two ratings for each tube, usually the maximum values. In the former case, all of the figuring has been done except that of calculating the load impedance of the modulated amplifier from the impedance ratio of the transformer, as previously explained. In the latter case, we may make our own calculations. Let us use the hypothetical tube which we previously used in examples. The manufacturer's ratings probably would look like this:

(Continued on page 98)

Double Your Power!

At the Useful Voice Frequencies

Cut through QRM with a voice that can be *understood*. You don't need tricky high gain amplifier with this tremendously efficient voice microphone. Eliminates all RF feedback troubles with its "airtight" shielding. Cuts out your hum problems too. You'll get more satisfaction out of the dollars spent on a VT-73.



LIST—

- MIKE
- STAND
- PLUG

$27.50

Write now for bulletin 10-C

Model VT-73

THE TURNER COMPANY

CEDAR RAPIDS, IOWA

Licensed under patents of the Brush Development Company

WE OFFER —

SPECIALIZED PERSONAL SERVICE of genuine value that is not available from other jobbers.

TIME SALES of all receivers and transmitters with terms arranged to suit you and 6% **finance charge.** We finance our own paper. **TRADE IN** your equipment for the down payment.

HARVEY, RCA, RME, All Star, Progressive transmitters on terms. All amateur apparatus at net prices.

TRADE IN YOUR RECEIVER

All receivers shipped on ten day trial. You need send but $5.00 with order, balance C.O.D. These receivers in stock:

RME-69s Complete	**$151.20**
1937 Breting 14s	**108.00**
The new Patterson PR-15	**109.50**
The new RCA ACR-111	**189.50**
RCA ACR-155	**74.50**
RCA ACR-175s	**119.50**
The new 1937 Super Pro	**238.14**
The new Hallicrafters 1938 S-16 Super Skyrider	**99.00**
Hallicrafters Sky Challenger S-15	**69.50**
Hallicrafters Sky Buddys	**29.50**
Hallicrafters Sky Chiefs	**44.50**
Hallicrafters Ultra Skyriders S-10	**99.50**

Every order and inquiry is personally attended to by Robert Henry, W9ARA, an active amateur for twelve years; graduate E.E. from M. I. T. and owner of Henry Radio Shop selling amateur supplies for eight years. You can reach me by letter, telegram, phone call, or visit 24 hours a day, 365 days a year. Write for any information.

HENRY RADIO SHOP

211-215 North Main Street **BUTLER, MISSOURI**

Class-B Audio Design

(Continued from page 46)

CLASS-B A.F. MODULATOR

D.c. plate voltage	1000 volts
Load resistance (plate-to-plate)	6400 ohms
Max. av. d.c. plate current (2 tubes)	317 ma.
Power output (2 tubes)	200 watts

From this information we wish to get two figures of vital importance which are not given. We want the recommended peak plate current and the drop across the tube at that current. With that information we can calculate the maximum output obtainable at the plate voltage available, together with the optimum reflected load impedance; or, if that output is greater than is necessary, the proper operating conditions for the required output may be obtained.

The peak plate current to one tube may be obtained by dividing the maximum average plate current (with sine wave input) to *both* tubes by 0.636. 317/0.636=0.5 ampere. This value should never be exceeded.

The drop across the tube is obtained indirectly by subtracting the voltage developed across R_p from the supply voltage. With a plate-to-plate load of 6400 ohms the reflected load impedance to one tube would be 6400/4 or 1600 ohms. With a peak plate current of 0.5 ampere, the peak developed voltage would be 0.5 × 1600, or 800 volts. With a supply voltage of 1000, the drop across the tube therefore must be 200 volts. The following formula should be used:

$$\text{U.P.O.} = \frac{(I_{p_{max}}) \times E_{R_p}}{2}$$

Suppose the power supply available for the modulators delivers only 900 volts.

$$\text{(Case 1)} \quad \text{U.P.O.} = \frac{0.5 \times (900-200)}{2}$$

$$\text{U.P.O.} = \frac{0.5 \times 700}{2}$$

$$= 175 \text{ watts}$$

The optimum value of reflected load impedance would be 700/0.5=1400 ohms for one tube, or 5600 ohms plate-to-plate.

If the power supply delivered 1100 volts, the calculations would be

$$\text{(Case 2)} \quad \text{U.P.O.} = \frac{0.5 \times (1100-200)}{2}$$

$$= \frac{0.5 \times 900}{2}$$

$$= 225 \text{ watts}$$

The optimum value of reflected load impedance would be 900/0.5=1800 ohms for one tube, or 7200 ohms plate-to-plate.

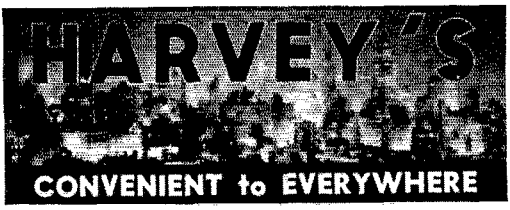

When in New York, visit our newly decorated and enlarged store . . . listen to all the new radio sets, see the latest developments . . . You are especially invited to inspect our new Camera Department. Should you have photographic equipment that you are anxious to trade in, we will offer liberal allowances on purchases of radio apparatus. Details can be furnished by mail.

NEW SKY RIDER SUPER RECEIVER

1938 model — 5 meter operation — minimum image trouble — R meter — variable selectivity . . . At the sensational low price (less crystal and speaker) of..... **$99**

Now you can own a real OSCILLOSCOPE with a large clear 3" tube (more than 7 square inches of screen). Completely equipped with amplifiers on horizontal and vertical plates . . . Perfect syncronization control at any frequency . . . A host of other features..... **$54.50**

Famous nine feature Dunco relays, in stock, each..... **$2.00**

Brush Transfilter for useful selectivity.. **$5.88**

Today's leading low-priced, low-powered tube.

TAYLOR T-20
$2.45

One of the finest mobile power supplies on the market . . . Electronic Power Pack—300 volts—100 ma. Perfectly filtered for 5 meter work..... **$13.50**

Complete "Get Started" outfit (Key, high frequency buzzer, battery and instructions)..... **$1.98**

The Value of the Month

THREE-STAGE TRANSMITTER FOR ALL BAND OPERATION. Complete kit as described on page 22 of the June QST. Punched and drilled chassis. Specified Cardwell condensers, Bud condensers, Taylor tubes, National coil forms, UTC transformers, IRC resistors, Isolantite sockets, Sangamo condensers. Ready to wire, less tubes and crystal.. **$39.95**

OUR *Best* VALUE IS OUR RECORD OF LOYAL SERVICE

HARVEY
Radio Company of New York
103 WEST 43rd STREET • NEW YORK, N. Y.

CABLE ADDRESS: "HARADIO"

Suppose we had 250 watts input to the modulated amplifier, in which case we would require only 125 watts from the modulator. Assuming a modulator plate voltage of 1050

$$\text{(Case 3)} \qquad 125 = \frac{I_{p_{max}} \times (1050-200)}{2}$$

$$125 = \frac{850 \times I_{p_{max}}}{2}$$

$$I_{p_{max}} = \frac{250}{850}$$

$I_{p_{max}} = 0.294$ amp. peak plate current

$850/0.294 = 2900$ ohms R_p or 11,600 ohms plate-to-plate.

If the turns ratio of the transformer is known, the calculations need not be made in terms of impedance but may be made directly in terms of voltage ratios. The turns ratio may be taken directly from the impedance ratio and is the square root of the impedance ratio. A transformer with an impedance ratio from secondary to total primary of $\frac{5}{8}$ would have a turns ratio of $\sqrt{\frac{5}{8}} = \sqrt{0.625} = 0.79$. This ratio is for the whole primary; the ratio from secondary to one-half primary would be 2×0.79 or 1.58.

In Case 1, we were able to develop 700 volts across R_p, which is half the primary, so the peak voltage across the secondary will be $700 \times 1.58 = 1106$ volts. The modulated amplifier plate voltage will always work out to be 1106 volts so long as the modulator plate voltage is 900 and the same transformer ratio and modulator tubes are used. The modulator will deliver 175 watts of audio so the input to the modulated amplifier could be a maximum of 350 watts. At 1106 volts, the plate current to the modulated amplifier should be $350/1106 = 316$ ma.

In Case 2, we were able to develop 900 volts across R_p, or one-half primary. $900 \times 1.58 = 1422$ volts across the secondary. The audio output is 225 watts, so the input to the modulated amplifier may be a maximum of 450 watts. $450/1422 = 316$ ma. modulated amplifier plate current.

In making the calculations only one precaution need be observed, namely that the input to the modulated amplifier must not exceed twice the audio output of the modulator. If more input is applied to the modulated amplifier, the plate voltage and current should be increased in proportion. Of course, 100 per cent modulation without distortion cannot be realized with appreciably greater inputs. If less input is desired the plate voltage should be maintained at the calculated value but the plate current may be decreased. This will increase the modulated-amplifier load impedance and also the reflected load impedance to the modulators. However, as the input to the amplifier is reduced less audio is required, and under these conditions the reflected load impedance *should* be increased, and it will increase in

ultra-high

"5-10" RECEIVER

- Tuned R.F. and Controlled Super-Regeneration 5 & 10 meters
- 4 Metal Tubes
- 5 inch Dynamic Speaker
- Only 9¾" x 6¾" x 5" overall.

IDEAL FOR MOBILE INSTALLATION

$28.00

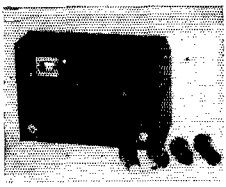

5 Meter Duplex Transmitter-Receiver

"Type TR-6A6"

- Non-radiating Rec'vr
- 7 Tubes — 5" Dyn. Speaker
- 6E6 Unity Coupled
- 10 watt Carrier
- 100% Modulation
- Duplex Operation — PHONE ● MCW

TRANSMITTER—RECEIVER

$47.70

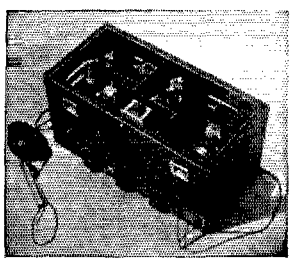

RADIO TRANSCEIVER LABORATORIES

8627—115 Street, Richmond Hill, New York

LYNCH GIANT KILLER CABLE

For any and all types of radio frequency transmitting and receiving systems.

Not only endorsed by, but *used by* leading radio experts everywhere.

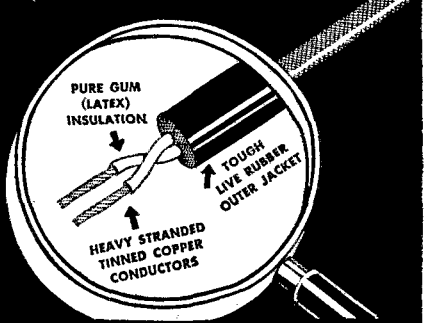

World's Largest Makers of Antenna Systems

L. S. BRACH Mfg. Corp.

Newark, N. J. BRACH Est. 1906

exactly the correct proportion. Perhaps this will be more readily understood if one considers that for a given tube and value of plate voltage, the developed voltage across R_p will be approximately the same for all values of current below filament saturation, and if the ratio of the transformer is not changed the voltage across the secondary will be the same. This is not strictly true because at lower values of plate current the drop across the tube will be slightly less. The difference is small and need not be taken into consideration for amateur applications.

GENERAL CONSIDERATIONS

One of the commonest questions asked is "What should the meter read?" The question has no definite answer when voice input is used. The current value we have been dealing with in making calculations is a peak value which never shows up on any meter. In setting the ratings for Class-B audio, an average value is stated. This is what the meter would read with sine-wave input, and is determined by multiplying the peak value by 0.636. In other words, the average value with sine-wave input for *two* tubes is 0.636 of the peak value for *one* tube. However, with voice input, because of the difference in wave form the same peak output and peak plate current are realized at much lower average values of plate current. Usually the average plate current with voice input is approximately 50 per cent of the value for sine-wave input at the same peak output. Only an oscilloscope will give a correct answer to the question, "What should the meter read?"

In calculating operating conditions, the information presented herewith must be tempered with good judgment. From the figures only it might seem possible to take a pair of 10's and transformers designed for use with them and by raising the plate voltage high enough modulate a kilowatt. However, it cannot be done.

The peak voltage from plate to filament will be the applied voltage plus the developed voltage. For instance, if the applied voltage is 1000 and the developed voltage 800, the peak voltage from plate to filament would be 1800 volts. The voltage from plate to grid would be greater by the amount of the peak grid voltage plus the bias, which would be approximately the drop across the tube, say 200 volts. Thus the peak voltage from plate to grid would be about twice the supply voltage. Consequently, the applied voltages should be in line with the maximum voltage ratings of the tubes or breakdown may be experienced.

Best transformer design involves the use of as small a core window as possible to accommodate the required amount of insulation and wire, and the minimum amount of insulation should be used to permit the tightest possible coupling between windings. For this reason, audio transformers use the least amount of insulation which will provide a reasonable safety factor. Consequently, if the voltages across the transformer are increased above the values for which it was designed, the

(Continued on page 106)

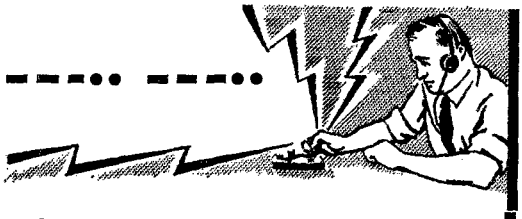

How're the wife and kids?

Sounds like part of a typical ham QSO doesn't it? . . . but, we're serious. You may be satisfied with your job, but is the xyl? Perhaps, you're not earning enough to put an "x" in front of your "yl." If you have the desire to improve your position in Radio, CREI can show you the way.

OUR ONE YEAR RESIDENCE COURSE IN PRACTICAL RADIO ENGINEERING

— is no "snap" course, but for the Radioman who is serious about the business of getting ahead, it can help him as our training has helped so many others. A post card mailed to us will bring you our 48-page "Tested Plan." It explains how you can accomplish your ambition to work toward the top in professional radio.



E. H. Rietzke, Pres.

Write Today for the Free Booklet "A Tested Plan for a Future in Practical Radio Engineering."

CAPITOL RADIO ENGINEERING INSTITUTE

WASHINGTON, D. C. 14th and Park Road — Dept. Q-8 — NEW YORK CITY 29 Broadway

CREI

5500 R. R. JOBS FOR CW MEN

WHO PREPARE THEMSELVES

■ AVAILABLE SOON ■

No license required. Eight hours per day. Year around. 65 to 80 cents per hour. If you can copy 15 words per minute, write

CODE-CRAFT Q 6703 Dunham Ave. CLEVELAND, OHIO



NEW HOLDER DESIGN

15 SECONDS TO INSTALL CRYSTAL

For All Bands

GREATER STABILITY

Plugs in 5 prong tube socket

Beautiful Appearance

MODEL AH HOLDER $1.00 At your dealer or direct

HIPOWER LOW DRIFT CRYSTALS:

within 10 kc. or Choice of stock

AH-10, 1700-3500 Kc. bands $2.35
AH-10, 7000-7300 " band 3.90

WRITE FOR NEW LITERATURE

Hipower "Low Drift" Broadcast and Commercial Crystals Are Approved by F.C.C.

Hipower Crystal Co., 2035 Charleston St., Chicago

YOU ARE INVITED TO INVESTIGATE THE MANY ADVANTAGES OFFERED BY

EASTERN RADIO INSTITUTE

899 BOYLSTON STREET, BOSTON, MASS.

Class B Audio Design

(*Continued from page 102*)

safety factor will be reduced. Increasing the voltage across the windings also adversely affects the low frequency response, though this is a less important consideration because the low-frequency cut off for most transformers is below the lowest frequencies obtained with voice input. The amount of d.c. through the secondary should not exceed the maximum rated value because it may result in core saturation, which necessarily must cause high harmonic content. In general, for safe operation, the voltages across and the currents through the windings of the transformer should be in line with those at which the transformer was intended to operate.

If the calculations are to be made for four tubes in push-pull parallel Class-B, the permissible peak plate current would be doubled. The drop across the tube or tubes would remain the same, as would the voltage developed across R_p. Twice the output may be obtained from four tubes as from two.

Rocky Mountain Division Convention

Colorado Springs, Colo., September 4th–5th

WHO will ever forget the Cave of the Winds? Yes, the Pike's Peak Amateur Radio Association is sponsoring the annual divisional convention which will be held at Colorado Springs, September 4th and 5th. Technical talks, equipment demonstrations, Army-Navy meetings, Novelty stunts, YL's theatre party, Picnic at Stratton Park, and of course a big banquet. Write C. E. Hathaway, Secretary, 1512 North Corona, Colorado Springs, Colo., for further information.

Roanoke Division Convention

Richmond, Va., September 4th–5th

ALL roads will be leading to Richmond and all hams will be trekking the highways for the 1937 official divisional convention if rumors are to be believed. Richmond Short Wave Club is sponsoring the convention to be held at the new John Marshall Hotel on September 4th and 5th. A program of special interest is being worked out—just watch for the publicity. President Woodruff, Major Hawthorne USMC and Commander Rogers USN will be present. There is a possibility that Secretary K. B. Warner will make the trip. A surprise will be sprung on the gang during the convention. R. N. (Bob) Eubank, 2817 Montrose Ave., Richmond, Va., is the chairman and will gladly give further information on request.

Cathode Modulation

♦

A complete 'phone transmitter, including power supply and modulator, capable of delivering a 100%-modulated carrier of 60 watts. The two 6F6 tubes used to modulate the push-pull T20 amplifier can just be seen in back of the tank condenser. The crystal socket is just to the left of the 6V6 oscillator.

♦

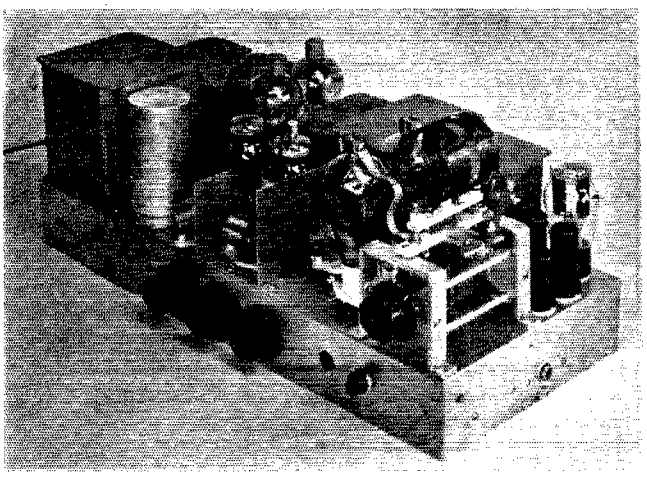

Combining Grid and Plate Modulation for Economy and Efficiency

BY FRANK C. JONES, W6AJF* AND FRANK W. EDMONDS, W2DIY**

CATHODE modulation is a system of modulation which brings the advantages of high-power 'phone operation to a much greater group of amateur operators than has heretofore been possible. By means of this system of modulation it is possible to modulate a high-power Class C amplifier with a surprisingly small amount of audio power, thus appreciably decreasing the size and cost of the modulation equipment.

This system of modulation, as the name implies, impresses the audio signal on the cathode circuit of the Class C stage, as shown in Fig. 1. Since the cathode circuit is common to both the grid and plate circuits of the Class C stage, cathode modulation is thus a combination of plate and grid modulation.

The audio power required for 100% cathode modulation is greater than that required for grid modulation, but considerably less than that needed for plate modulation. Cathode modulation is not attended by the difficulties of adjustment inherent in grid-modulated equipment, nor does it require the abundance of Class C r.f. grid drive necessary for plate modulation.

Whereas a plate-modulated Class C amplifier requires audio power equal to 50% of the Class C d.c. input power, the amount of audio power required for cathode modulation is between 5 and 15% of the d.c. input power, depending on the amplification factor of the Class C tube and on the degree of impedance mismatch between the modulator and cathode impedance. The impedance of the cathode circuit of the modulated stage will appear to be between 300 and 2000 ohms, depending on the characteristics of the tube or tubes. An impedance mismatch of 4 or 6 to 1 has little effect on the character of the modulation but will require the use of slightly more audio power, depending on the degree of mismatch. An average value of 500 ohms will be found satisfactory in most cases, and transformers designed to work into a 500-ohm load may be used for cathode modulation provided that the 500-ohm winding is sufficiently heavy to carry the Class C plate and grid current, and the size of the transformer is sufficient to permit dissipation of the additional heat due to the added I_2R losses involved. Transformers which are designed to permit a closer match of cathode impedance will, of course, result in greater modulation efficiency and hence less audio power will be required.

The mechanics of cathode modulation are as follows: The instantaneous negative peak voltage impressed on the cathode increases the instantaneous plate voltage, and at the same time decreases the grid bias, both of which factors cause

Any modulation system that requires only about one-fifth the audio power required for plate modulation and still allows the final amplifier to realize between 50 and 60% efficiency would seem to be destined for widespread application. It now appears that cathode modulation — known years ago as "center-tap modulation" — has been hiding its light under a bushel, since it is just such a system. Here's your chance to get acquainted.

* 2037 Durant Avenue, Berkeley, Calif.
** United Transformer Corp., 150 Varick St., New York City.

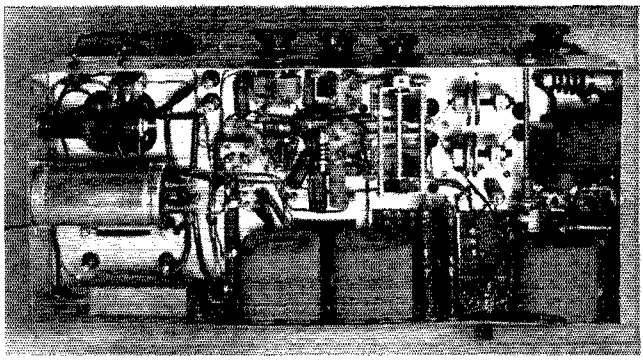

A view underneath the chassis shows how compact the modulator unit of a cathode-modulated transmitter can be. The entire modulator unit requires only the two small transformers shown at the extreme right.

an increase in r.f. output. Similarly, an instantaneous positive voltage will cause a decrease in r.f. output due to a decrease in plate voltage and an increase of bias. Thus the grid and plate modulation is in phase and capable of 100% modulation.

The ratio of grid and plate modulation determines the efficiency at which the Class C stage may be operated. A Class B amplifier which is 100% grid-modulated usually runs at 30 to 35 per cent efficiency with no modulation. A cathode-modulated Class C amplifier can be adjusted to run at 60% efficiency. If the grid modulation is reduced to 70 to 75% of the total, the amplifier may then be adjusted to run at a resting efficiency of 50 to 60%, with resultant higher carrier output. The remaining 25% modulation may then be obtained in the form of plate modulation of the cathode circuit. The 25% plate modulation can be obtained with an audio power of approximately 4% of the d.c. plate input under ideal conditions. The power required for grid modulation of 60 to 70% is approximately equal to 1 to 2% of the d.c. plate input. Therefore, under average conditions, an audio power equal to 10% of the d.c. plate input will be sufficient for 100% cathode modulation.

Low-μ triodes should be used in the cathode-modulated Class C amplifier, since they are somewhat more suitable for grid modulation. Pentodes or tetrodes are not suitable because of their extremely high amplification factor, although triodes with a μ of 20 to 30 may be used with a slight sacrifice of carrier power. Bias may be obtained by means of a grid resistor, although a source of fixed bias voltage is preferable and will give better grid voltage regulation. The bias should be several times cut-off and, if obtained by a grid-leak resistor, the resistance should be several times greater than that used for c.w. or plate-modulated amplifiers. *The grid-leak resistance should be bypassed for audio frequencies* by a ½- to 1-μfd. paper condenser. If too much grid modulation is obtained, part of the grid resistance should be left without by-pass to limit the degree of grid modulation. It is advisable to use a variable grid resistance or variable-voltage bias pack in order to compensate for the varying r.f. drive and antenna loading on different bands, if the transmitter is to be used on more than one band. This is easily accomplished by using a number of resistors in conjunction with a rotary tap switch to cut in the required amount of grid resistance. In adjusting the bias resistance, the resistance should be increased until the monitoring 'scope shows full modulation is being obtained. If the resistance is too low, the carrier will not be fully modulated; if it is too high, overmodulation will result.

Too much r.f. drive will decrease the percentage of modulation obtainable, but will not seriously affect the quality. Too little drive will reduce the available carrier and result in over-modulation. The antenna loading should be rather heavy, as is the case with a Class B linear amplifier. Too light loading will result in downward modulation. The Class C stage should be loaded to the point where a further increase in loading causes a decrease in antenna current, for proper operation.

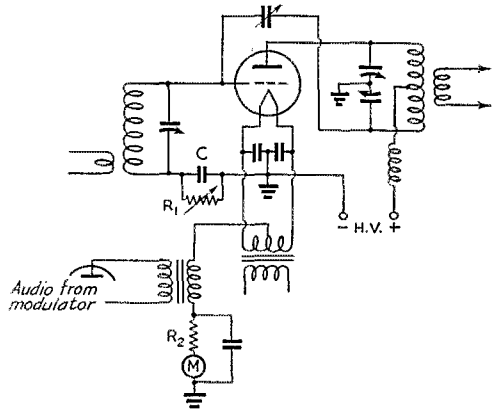

Fig. 1 — The fundamental cathode-modulation circuit. Audio from the modulator unit is introduced in the cathode (center-tap) circuit of the tube or tubes being modulated. The grid-leak resistance R_1 is adjusted for proper modulation characteristics, and R_2 serves to give some original bias to the tube. Condenser C must be large enough to by-pass the modulation frequencies.

When the transmitter is properly adjusted, the cathode current will remain very nearly constant under modulation. Some slight change (5%) is not serious, however.

A 100-Watt Transmitter

A representative transmitter, employing cathode modulation, is shown in the photographs. This 100-watt transmitter is indicative of the space economy which may be obtained with a cathode-modulated transmitter. It is mounted on a standard 10" x 23" x 3" chassis which contains the three r.f. stages, two power supplies, and the speech amplifier and modulator.

The r.f. line-up is a 6V6 regenerative crystal oscillator, an 807 buffer, and a push-pull T20 power amplifier. In the audio, a 6SJ7 pentode feeds a 6C5 which is transformer-coupled to the p.p. 6F6 modulators. The modulation transformer is one which has been designed to match several impedances between 300 and 2000 ohms for proper matching to the cathode circuit of the Class C amplifier. The low-voltage supply furnishes power to the speech amplifier and to the oscillator and buffer. The Class C plate power is supplied from the high-voltage power supply at the left-hand end of the chassis. The 6SJ7 was

(Continued on page 102)

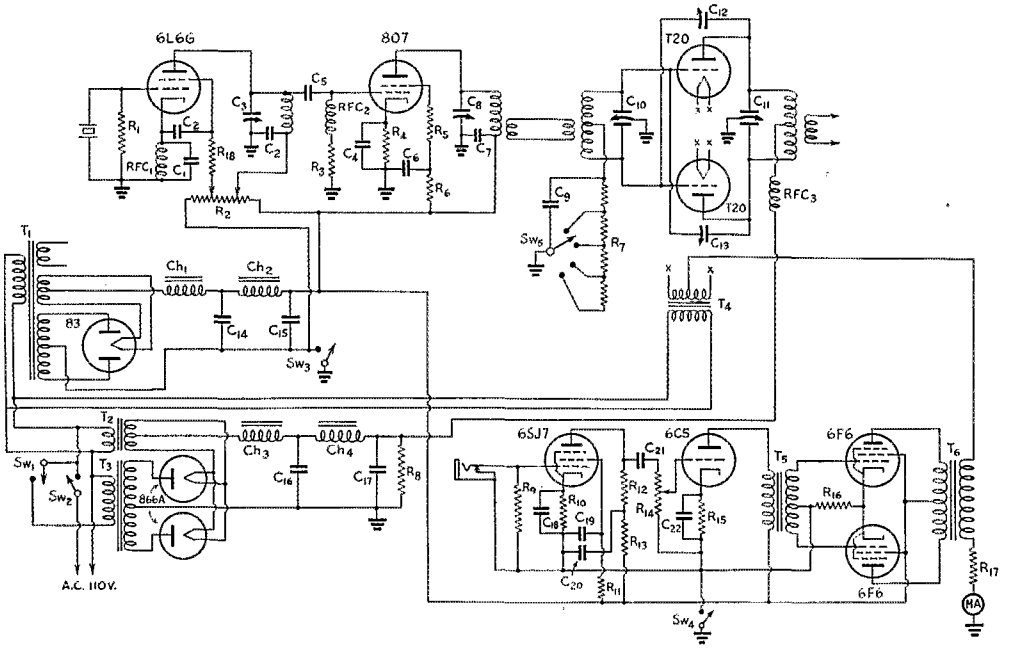

Fig. 2 — Diagram of the 100-watt cathode-modulated transmitter.

C_1 — 500-$\mu\mu$fd. mica.
C_2, C_7 — 0.01-μfd. mica.
C_3, C_8 — 100-$\mu\mu$fd. variable.
C_4, C_6, C_{21} — 0.01-μfd. paper.
C_5 — 50-$\mu\mu$fd. mica.
C_9 — 1.0-μfd. paper.
C_{10}, C_{11} — Split-stator, 100 $\mu\mu$fd. each section, variable.
C_{12}, C_{13} — 10-$\mu\mu$fd. neutralizing condenser.
C_{14}, C_{15} — 8-μfd., 450-volt electrolytic.
C_{16}, C_{17} — 2-μfd., 1000-volt.
C_{18}, C_{22} — 10-μfd., 25-volt electrolytic.
C_{19} — 0.25-μfd., 400-volt paper.
C_{20} — 0.5-μfd., 400-volt paper.
Ch_1 — 5-25-henry swinging choke, 175 ma. (S-30).
Ch_2 — 10-henry, 175-ma. filter choke (S-29).
Ch_3 — 5-25-henry swinging choke, 225 ma. (S-32).
Ch_4 — 20-henry, 225-ma. filter choke (S-31).
R_1 — 50,000-ohm, 1-watt.
R_2 — 25,000-ohm, 50-watt.
R_3 — 15,000-ohm, 2-watt.
R_4 — 100-ohm, 10-watt.
R_5 — 100-ohm, 1-watt.
R_6 — 20,000-ohm, 20-watt.
R_7 — 16,000-ohm, 20-watt, tapped every 2000 ohms (made from eight 2000-ohm resistors).
R_8 — 50,000-ohm, 100-watt.
R_9, R_{11} — 2-megohm, ½-watt.
R_{10} — 2500-ohm, ½-watt.
R_{12} — 0.25-megohm, ½-watt.
R_{13} — 100,000-ohm, ½-watt.
R_{14} — 1-megohm volume control, with switch.
R_{15} — 2,000-ohm, ½-watt.
R_{16}, R_{17} — 200-ohm, 20-watt.
R_{18} — 10,000-ohm, 1-watt.
RFC_1, RFC_2 — 2.5 mh. r.f. choke, 125 ma.
RFC_3 — 2.5 mh. r.f. choke, 500 ma.
SW_1 — S.p.s.t. toggle.
SW_2, SW_3 — D.p.s.t. toggle.
SW_4 — On volume control.
SW_5 — 11-position rotary switch.
T_1 — Plate-filament transformer; 525 volts at 250 ma. (S-39).
T_2 — Filament transformer, 2½-volt, 10-ampere (S-57).
T_3 — Plate transformer, 990-volt, 200-ma. (S-45).
T_4 — 7.5-volt filament transformer, 8-ampere (S-61).
T_5 — Interstage audio transformer, plate to p.p. grids (S-30).
T_6 — Cathode modulation transformer, 6F6 plates to 300–2000-ohm load (CM-15).

Figures in parentheses refer to UTC type number.



H. R. Rietzke
Pres. CREI

Here is HOW—

You can train for a better job and more money in

Radio & Television

Insure your future in this expanding field

Why should you let new men come in and get the good jobs in Radio and Television? Your own valuable experience coupled with the modern technical training made available by CREI — will equip you to step into the big jobs that demand trained men. There's a real future for those who plan their future right now!

Men with Technical Training
Get better jobs — more money

Right now is the time for you to start training for more money and a better job. CREI offers you a practical, thorough home-study course in Radio and Television Engineering. Write today for our interesting booklet — you'll thank us many times after reading its 48 pages.

More than 300 Broadcasting Stations Employ CREI Men

TEAR OUT COUPON AND MAIL FOR FREE BOOK

FREE! *Please send me your new illustrated book, "A Tested Plan for a Future in Radio"*

Name .....

Address .....

City .....



Capitol Radio Engineering Institute
Dept. Q-11, 3224 16th St., N.W., Washington, D. C.

SUPER ACTIVE

HIPOWER

LOW DRIFT
CRYSTAL UNITS
HIPOWER
"RUBIES"

Highest degree accuracy, precision cut, finest Brazilian Quartz—Hipower "Rubies" deliver max. performance.

Complete Crystal Units

160-80-40 meter bands $4.50
20 meter bands 7.25
Temp. coefficient 4 cycles or less per M C per °C.

HIPOWER
"EMERALDS"

Not "X" cuts—not "Y" cuts—but high quality low drift crystals at "X" and "Y" cut prices. Large production facilities and an exclusive Hipower method of grinding brings you these units at the sensational low prices shown here.

Complete Crystal Units

160-80-40 meter bands $3.35
20 meter bands 5.50
Temp. coefficient 10 cycles or less per M C per °C.

At your parts distributor. Catalog sent on request.
Newark Electric Co., Chicago, now has full line.

HIPOWER CRYSTAL COMPANY
2035 CHARLESTON ST. CHICAGO, ILL.

Hints and Kinks

(Continued from page 64)

the measurement cell of our watt meter. Part has been dissipated in the associated tuned circuit and connecting wires. Assuming that the power consumed by each of several loads on a transmitter is proportional to the increase in final plate current which the connection of each load produces, we can set up this proportion. $\frac{W_t}{W_a} = \frac{I_f - I_u}{I_f - I_t}$, where W_t is the true power output, W_a is the apparent power output, I_f is the average final plate current under full load, I_u is the final plate current under no load, and I_t is the final plate current with only the tuned circuit and connectors as load, that is, with the cell disconnected. In the case we have been following, I_f is 151 ma., I_u is 34 ma., and I_t is 53 ma. Substituting and solving we get 87.4 watts for the true power output of the transmitter.

A second and third trial of the experiment gave us values of 89.0 watts and 89.2 watts respectively. On the basis of these measurements, we accepted 89 watts as the power output of our transmitter on 20 meters. All three measurements and calculations were made in a space of two hours one evening.

In summary, the calorimeter type radio-frequency watt meter is simple and inexpensive to construct. The observations and calculations are not difficult to make. And the results obtained are of satisfying accuracy.

— Robert L. Ebel, W8RSC

Cathode Modulation

(Continued from page 25)

used since its grid comes out below the chassis where all the a.f. circuits are kept, to shield them from r.f. fields.

All r.f. circuits, except the final grid tank and neutralizing condensers, are kept above the chassis. There is no evidence of r.f. feedback even though the entire audio system is mounted next to the Class C stage. It will be noted that the negative returns of the audio circuits are insulated from the chassis and returned to switch SW_4, mounted on the volume control, so that the modulator and speech amplifier may be turned off for c.w. operation. The secondary of the CM-15 modulation transformer was connected for an impedance of 1500 ohms, which in conjunction with a Class C grid leak of 20,000 ohms, gave a proper balance between grid and plate modulation for the T20's being used.

The filament by-pass condensers used in the cathode-modulated Class C stage should not exceed a value of 0.002 μfd., and no other stages should be supplied from this transformer. Resistor R_{17} in the cathode return of the Class C stage may be bypassed for audio frequencies, if desired, with an 8-μfd. condenser. This will not add to the quality of the modulation, but will result in a slight saving of audio power.

A 40-Watt Modulator with Cathode-Coupled Driver

Four Stages in a Compact Unit

BY WILLIAM J. LATTIN,* W4JRW

TYPE 6L6G tubes in push-pull Class AB_2 operation require a driver of low impedance and good regulation, because the tubes draw grid current on the positive signal peaks. When a transformer-coupled driver is employed, a fixed-bias source is needed which must have such excellent regulation that battery bias often is used. An excellent coupling transformer having fairly high inductance and low-resistance windings is required. Since it was desired to build a 40-watt modulator as compactly as possible, the use of a cathode-follower driver was investigated and found to be quite practical.[1]

The circuit shown in Fig. 1 was set up in the laboratory and measurements of power output and distortion were made. The results are shown by the curves plotted in Fig. 2. It will be seen that an output of 40 watts was obtained with about 3-per-cent total distortion. The total "B" current drawn by the sections of the 6SN7GT cathode followers remains constant at about 13 milliamperes for all signal voltages applied, which indicates that the regulation of the negative supply voltage is unimportant. This was verified by using a negative-voltage source applied through a 10,000-ohm resistor without by-passing to obtain −67.5 volts at the cathode return of the 6SN7GT. The power output and distortion readings were the same as shown in Fig. 2.

A graphical analysis of the cathode follower which was made in order to estimate the values of cathode resistors and operating voltages may be of interest. This is shown in Fig. 3. The solid-line curves are plate-current *vs.* grid-cathode voltage (E_g) characteristics obtained from a tube handbook. An axis of R_kI_p, which shows the cathode-follower output voltage, is shown for $R_k = 5000$ ohms. The operating characteristic of the cathode follower is shown by the dash-line curve (only for $R_k = 5000$ ohms). This operating curve may be drawn easily because when $I_p = 0$, $E_k = 0$ and $E_{pk} = 300$; when $I_p = 10$ ma., $E_k = 50$ and $E_{pk} = 250$, etc.

A line having a slope of 5000 ohms (for R_k) is drawn from $I_p = 0$ and $E_g = 0$ through the point at −10 volts E_g and 2 milliamperes, since −10 volts divided by 2 milliamperes is 5000 ohms. Now with no signal, E_k will be about 13.5 volts as shown by the arrow drawn horizontally from the intersection of the 5000-ohm solid line with the operating characteristic to the E_k axis. Since E_k cannot be made negative but can go only to zero on the negative swing of a sine-wave signal applied to the grid, about 13.5 volts peak is the largest sinusoidal output that can be obtained before clipping on the negative half-cycle starts. It may be seen that clipping on the positive side will not start until the peak grid voltage is much higher. This may be determined by sliding a ruler parallel to the 5000-ohm line along the E_g and E_k axes and extending the line to the right until it again crosses the E_g axis. To obtain higher voltage from the cathode follower the grid may be returned to a positive point. For instance if the grid-to-ground voltage is + 20 and E_k = + 30, a peak output of about 30 volts can be obtained without clipping on the negative side.

This driver circuit was used in the 40-watt modulator shown in Fig. 4. The negative supply voltage was obtained by means of a half-wave rectifier using the same transformer as the main "B" supply. It was found that the 10-μfd. by-pass on the screen supply for the 6L6Gs, C_{11}, was quite worth while since it resulted in about 10

*1304 Locust St., Owensboro, Ky.

[1] Greenwood, "Cathode-Follower Circuits," *QST*, June, 1945, p. 11; Henry, "Improved Driver Stages for Class-B Amplifiers," *QST*, Nov., 1945, p. 45.

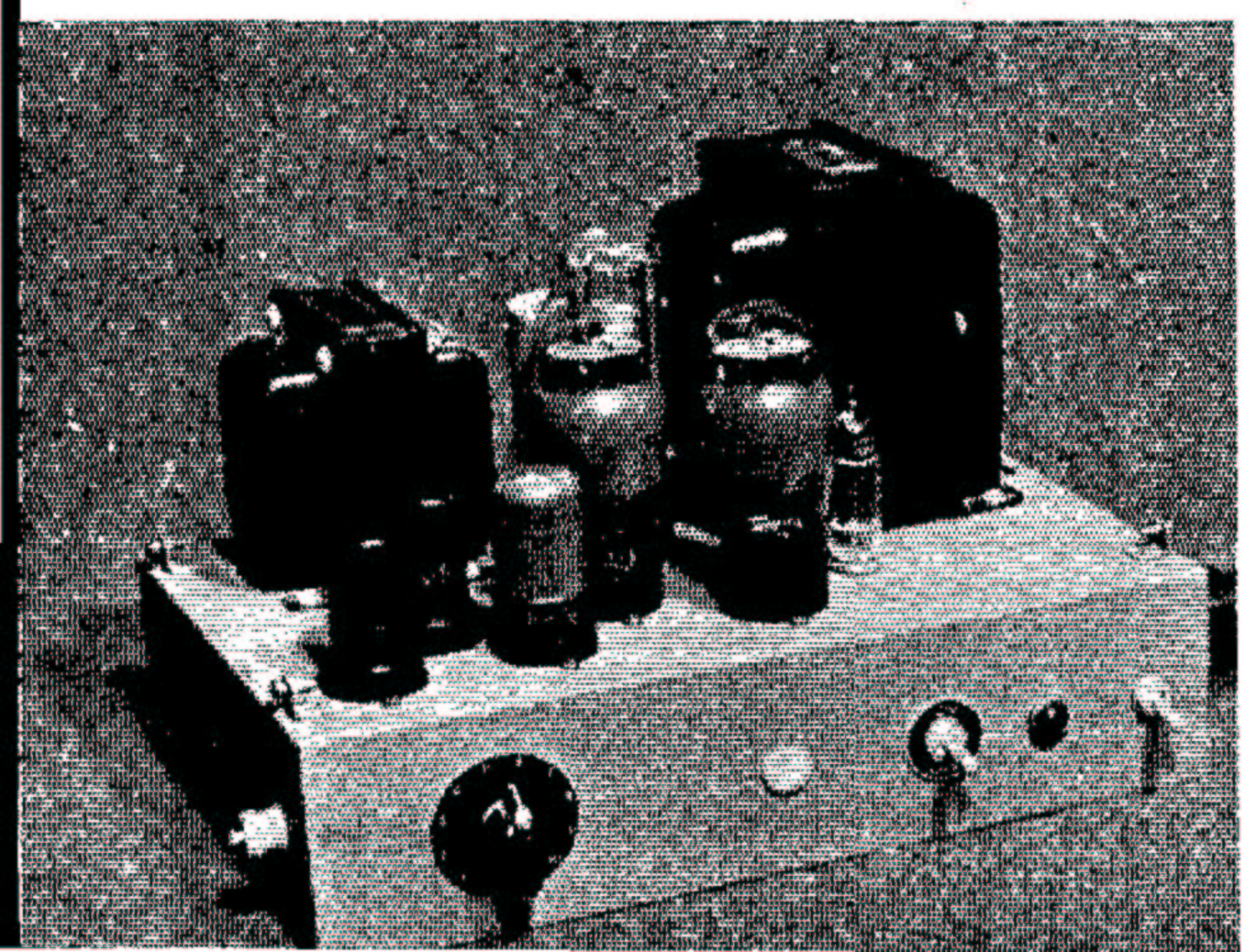

♦

The cathode-coupled modulator is built into a compact unit which includes power supply. The output transformer is mounted externally in the r.f. unit.

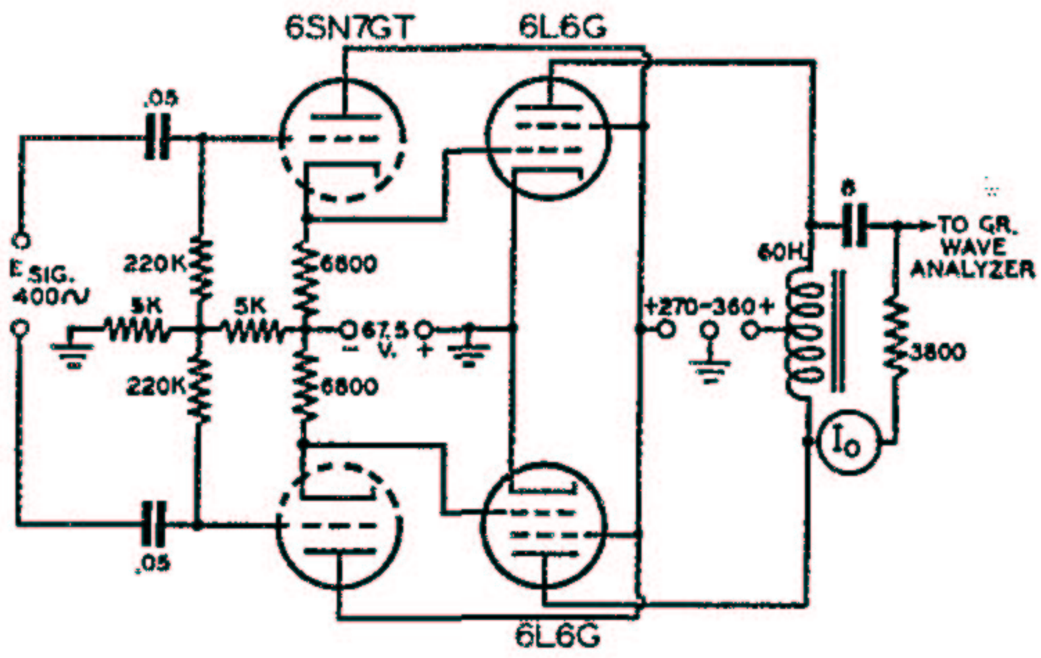

Fig. 1 — Circuit used for measuring power output and distortion in the cathode-coupled Class AB_2 modulator.

per cent more power output than is normally obtained with an unby-passed screen-voltage divider.

The possibility of returning the cathode-follower resistors to ground and using self-bias on the 6L6Gs with a VR-75 voltage regulator across the self-bias resistor was considered. However, this would have required a "B" supply 75 volts higher, and also several VR-75 tubes in parallel would probably have been necessary, because the plate-and-screen current of the 6L6Gs rises to over 200 ma. under full drive. Since the negative voltage supply was so readily obtained, it was used in preference. If a selenium rectifier with a high-enough peak-inverse-voltage rating were available, it would further simplify the negative-voltage supply, since the use of a separate filament winding is advisable with the 6X4 because

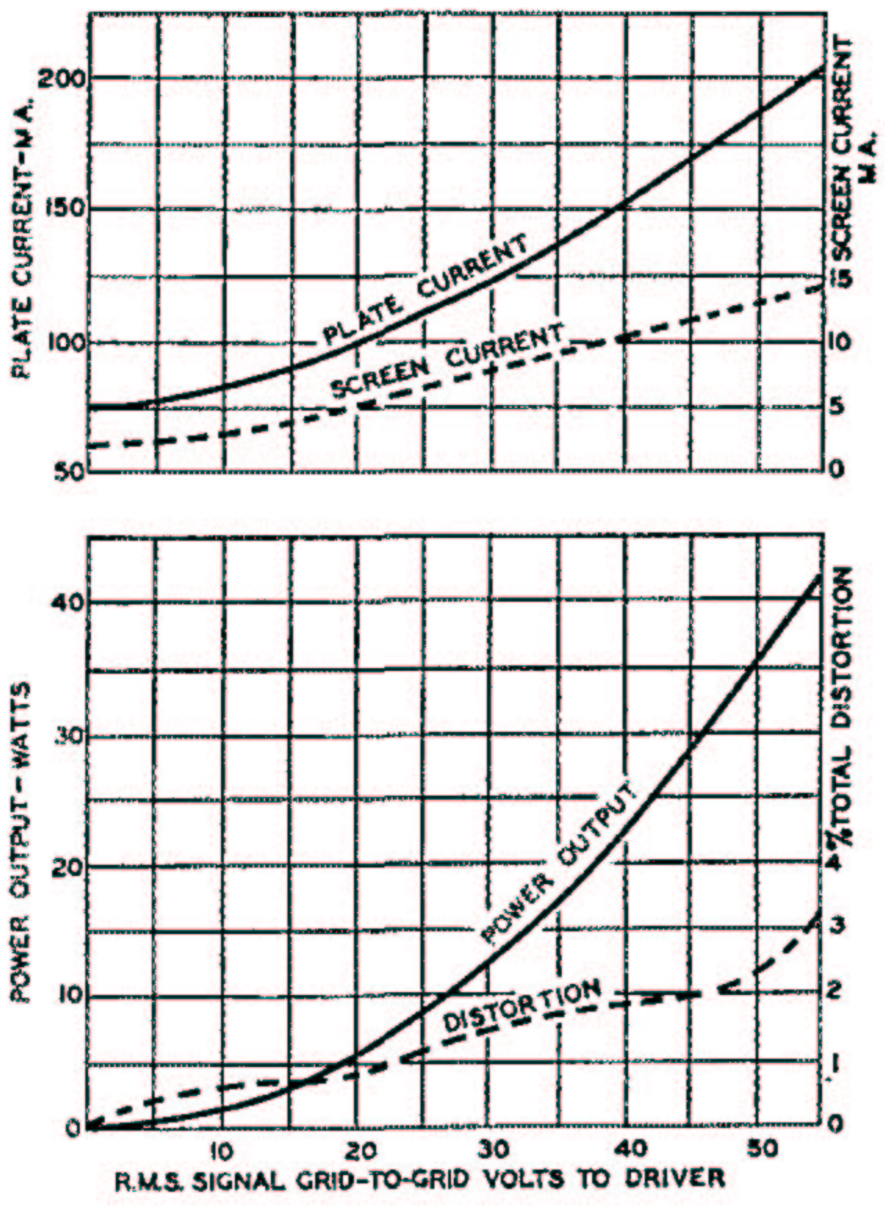

Fig. 2 — Curves showing power output and distortion from a 6L6 Class AB_2 amplifier with cathode-coupled driver.

of the high a.c. voltage from cathode to ground.

In the cathode-follower driver, the grid return was made to a point 34 volts positive with respect to the cathode return, resulting in a value of E_k of about 45 volts. Since the return for R_k is made to −68 volts, the potential at the cathodes of the 6SN7GT, which is applied to the grids of the output tubes, is −23 volts with respect to ground. This provides the correct bias on the output tubes as well as a large

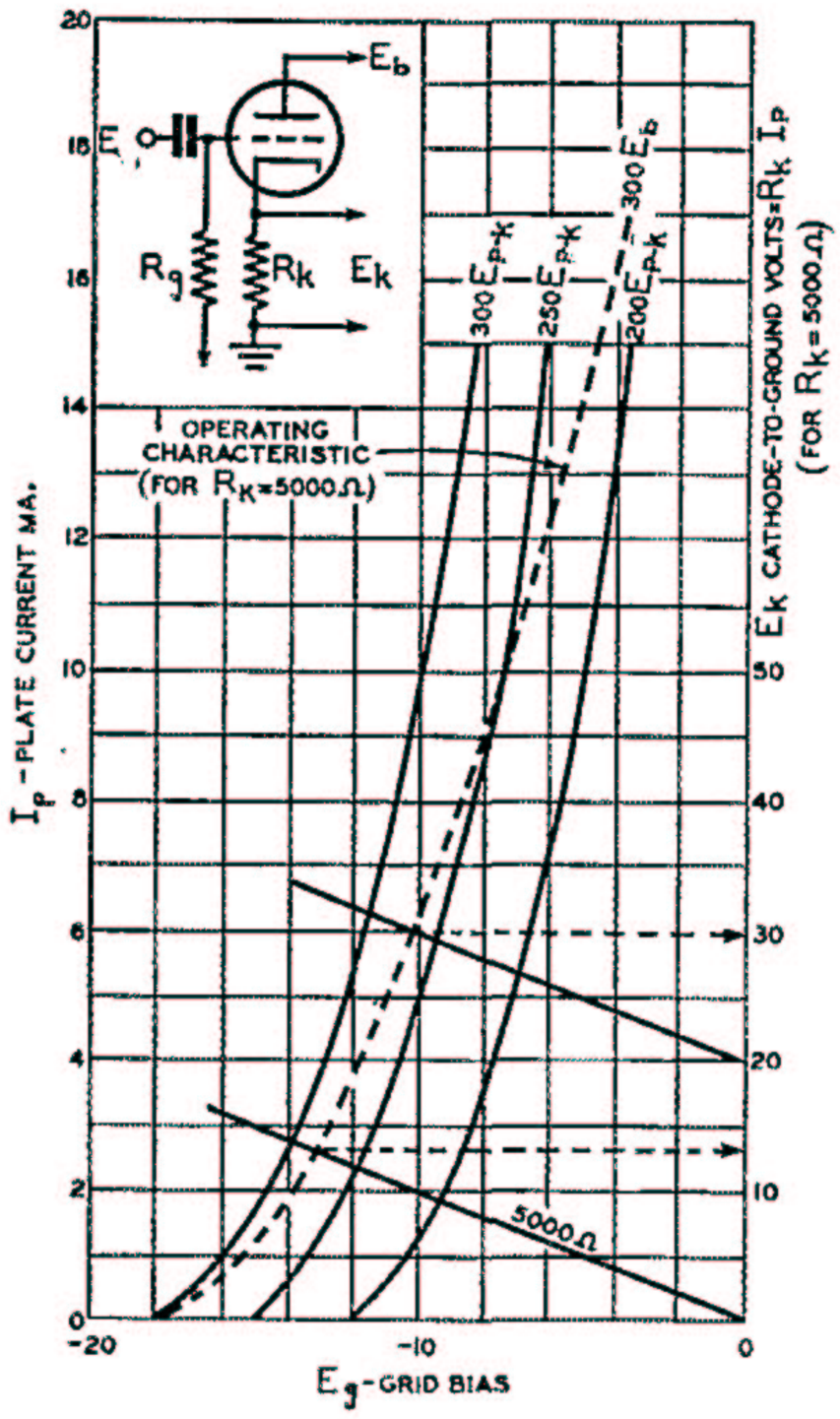

Fig. 3 — Curves used in 6SN7GT analysis. Grid-cathode voltage is shown across bottom. When upper 5000-ohm line is extended, it crosses the E_g axis at +20 volts.

margin of safety in the signal voltage which may be applied to the cathode-follower grids before clipping can occur.

A Type 6SJ7 is used in the first amplifier stage which is followed by a 6SC7 phase inverter. The only requirement for these two stages is that they provide sufficient gain to obtain about 55 volts r.m.s., from grid to grid, at the 6SN7GT.

Construction

The photographs show most of the constructional details of the modulator unit. One small chassis contains all of the components except the modulation transformer, T_1, which is mounted in the unit containing the r.f. amplifier, and is not shown.

The power supply occupies the rear half of the chassis with the filter choke, L_1, to the left, the power transformer, T_2, to the right and the 5U4G rectifier tube and filter condenser in be-

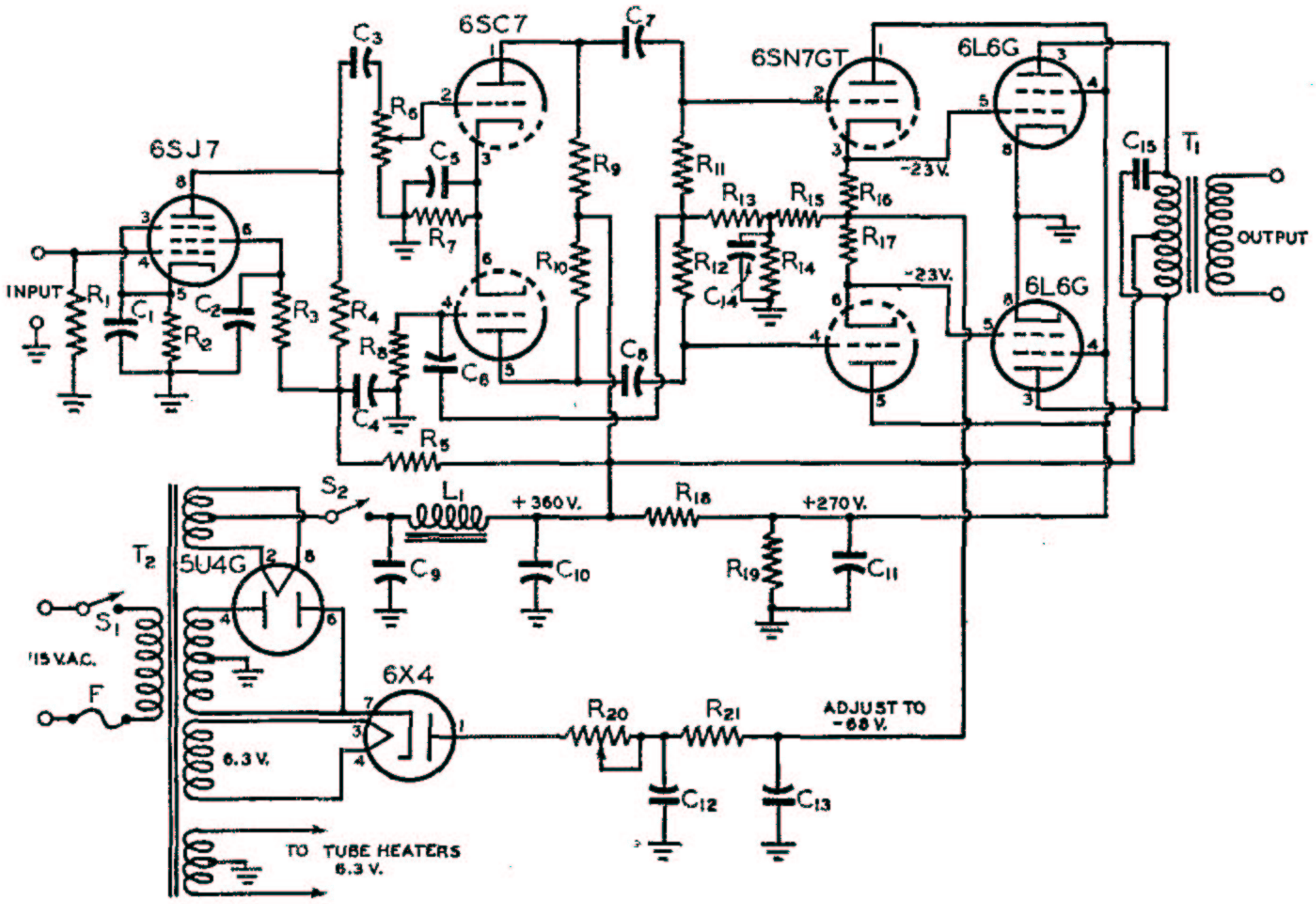

Fig. 4 — Circuit diagram of the 40-watt modulator using a cathode-coupled driver.

C_1, C_5 — 25-μfd. 50-volt electrolytic.
C_2 — 0.1-μfd. paper.
C_3 — 0.02-μfd. paper.
C_4 — 8-μfd. 450-volt electrolytic.
C_6, C_7, C_8 — 0.05-μfd. paper.
C_9, C_{10}, C_{11}, C_{12}, C_{13} — 10-μfd. 450-volt electrolytic.
C_{14} — 20-μfd. 150-volt electrolytic.
C_{15} — 0.01-μfd. mica, 1000 volts.
R_1, R_3, R_8 — 1 megohm, ½ watt.
R_2 — 680 ohms, ½ watt.
R_4, R_9, R_{10} — 0.22 megohm, 1 watt.
R_5 — 47,000 ohms, 1 watt.
R_6 — 1-megohm variable.
R_7 — 1500 ohms, 1 watt.
R_{11}, R_{12} — 0.33 megohm, ½ watt.
R_{13} — 0.1 megohm, ½ watt.
R_{14}, R_{15} — 22,000 ohms, 1 watt.
R_{16}, R_{17} — 6800 ohms, 1 watt.
R_{18} — 2500 ohms, 10 watts.
R_{19} — 25,000 ohms, 10 watts.
R_{20} — 5000-ohm variable.
R_{21} — 2000 ohms, 10 watts.
L_1 — 10-hy. 200-ma. filter choke.
F — 3-amp. fuse.
S_1, S_2 — S.p.s.t. toggle switch.
T_1 — Modulation output transformer.
T_2 — Power transformer — 375-0-375 volts r.m.s., 200 ma.; 6.3 volts, 4 amp.; 6.3 volts, 0.5 amp.; 5 volts, 3 amp.

tween. Grouped along the front edge of the chassis, from left to right, are the 6SJ7, the 6SC7, the 6SN7GT, the pair of 6L6Gs and the 6X4 rectifier. The microphone input connector is set in the left-hand edge of the chassis and along the front edge are the gain control, R_6, and the two toggle switches, S_1 and S_2.

Underneath, the various by-pass condensers are grouped around the tube sockets close to the points to be by-passed. The short lead between the microphone connector and the grid terminal of the 6SJ7 is covered with shield braid to prevent hum pick-up and instability.

This modulator has been in use for several months and has proved to be capable of modulating one hundred per cent an 829 running at about 80 watts input, as checked on an oscilloscope.

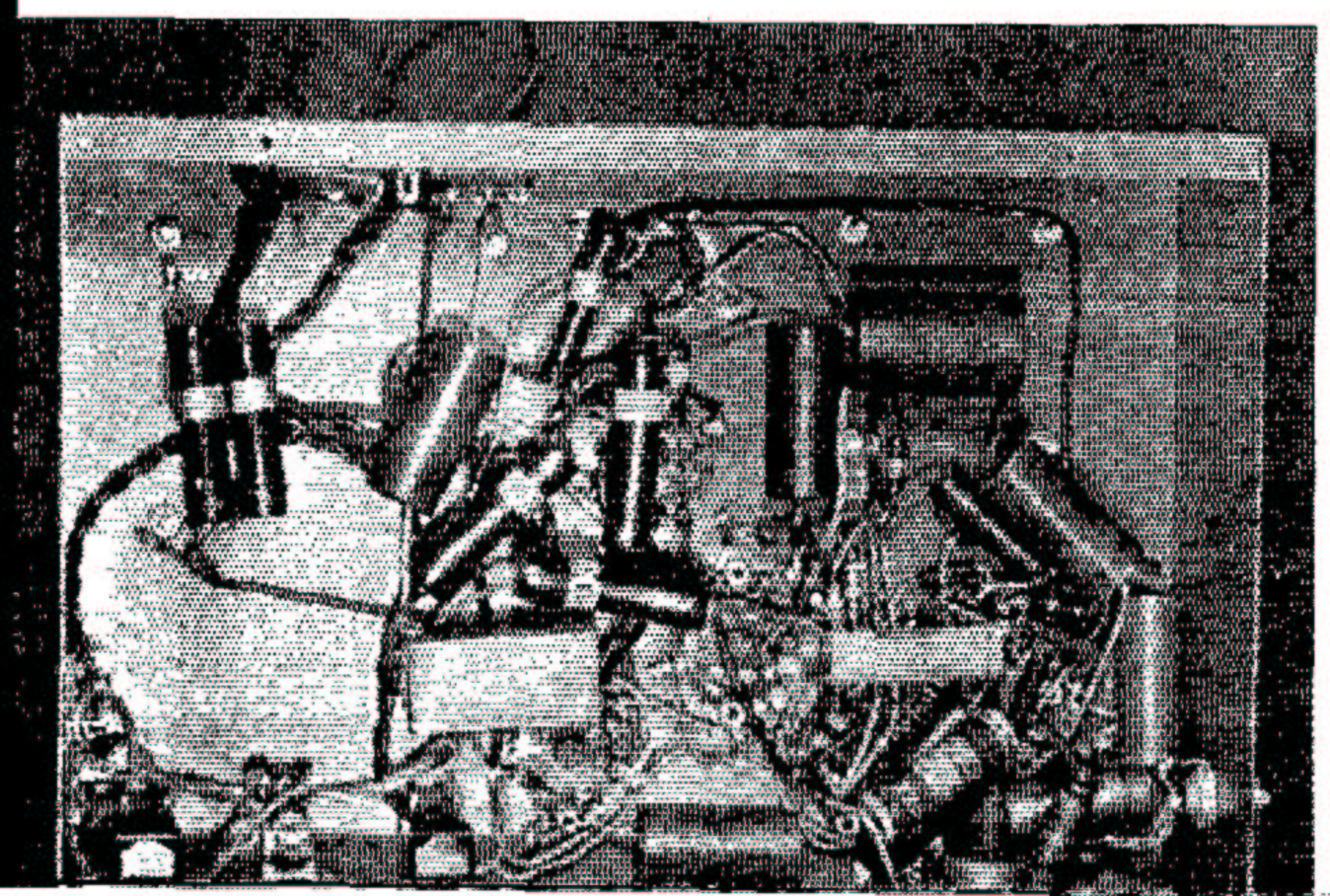

Bottom view of the cathode-coupled modulator showing the general location of small parts.

mitter, what the relative effects of the second, third and higher-order harmonics will be. Work along these lines already is under way and will be reported in *QST* as results become available. From what has been done so far it seems indicated that keeping harmonics out of the antenna is relatively a minor problem (the methods outlined in *QST* last November are effective); direct radiation from the transmitter, power wiring, and stray feed to transmission lines are far more serious in the immediate locality. It is safe to say that the number of amateur transmitters in which attention has been paid to reducing direct radiation of harmonics is completely negligible. We just haven't done it, for the quite good reason that until now there has been no real necessity.

Preventing direct radiation is likely to require a complete change in our philosophy of transmitter construction. A basic requirement is really good shielding of that part of the transmitter in which the offending harmonics are generated. But shielding alone is not enough; the best shielding in the world will be rendered useless if there is coupling, either through ordinary induction or through stray voltage drops in chassis or shield, to any of the conductors that necessarily enter the shielded enclosure. This calls for filtering, intelligent design, and patient experimentation on each individual rig. Much as we may long for the good old days of one-tube transmitters on open breadboards, it is in the cards that the increasing use of the frequency spectrum *above* our long-distance bands is going to force real engineering into ham transmitting gear.

At that, there is no guarantee that the best possible job of reducing harmonic radiation will be good enough to solve the house-next-door problem. There are plenty of competent engineers who sincerely believe that it can't be done. There are also, frankly, hams who don't want to take the trouble. Both groups are plumping for a reallocation that will let us absorb our second harmonics. But reallocation is a last-ditch device; it seems fundamental to us that before we can advance it as the only solution we must be in a position to demonstrate conclusively that there is no possible way by which transmitter harmonics can be reduced to a level that will permit reasonably interference-free reception of v.h.f. broadcasting within the service area of the station on whose channel the harmonics fall.

Interference to f.m. broadcasting can be minimized by avoiding frequencies having harmonics that fall on the local stations. But there is no dodging a television channel; the channels in that service are so wide that a single one will swallow all the harmonics from an amateur band. To make matters worse, it does not take much harmonic strength to cause ruinous interference, particularly in view of the relatively low powers used in television broadcasting. When the receiver is next door an equivalent power in the harmonic of a few hundredths of a watt will completely spoil the received picture. Our job is thus one of no small magnitude. On the other hand, it has been demonstrated that a high-power ten-meter amateur transmitter can be treated so that at distances measured in feet it will interfere on no channel except the one in harmonic relation, and it has also been demonstrated that *general* interference — over distances of the order of a mile or more — can be eliminated even on the harmonic channel. There is obviously much we can do to relieve the situation with the means now at our command.

Whether or not a complete cure is feasible — and that is yet to be determined — the potentialities of those harmonics that we do not absorb in our own bands are such that we are going to have to give their reduction a good deal of serious attention. Not only broadcasting but the many safety services now in the v.h.f. region are going to demand protection from our harmonic excrescences — just as we ourselves demand that we be relieved from paying any penalty for the shortcomings of b.c. receivers. — G. G.

OUR COVER

With all the talk going on about generators, portables, batteries, sunburn lotion and citronella, you can't help knowing Field Day is only weeks away. To set the stage for this year's bigger-than-ever outdoor event, we give you this action shot of the 2- and 6-meter positions of the Inglewood Amateur Radio Club entry of last season, as set up in the Palos Verdes (Calif.) hills. Fraternizing with Old Sol — and kibitzing on W6UXN — is W6UXB. W6QIR is holding down the tent position.

FEED-BACK

In W4JRW's April *QST* article, "A 40-Watt Modulator with Cathode-Coupled Driver," the alternative of using several VR-75 tubes in parallel for biasing the 6L6Gs is suggested. This method will not always work, W1PAD reminds us, because the striking voltages are not identical in all tubes. To make the system "sure-fire," it is recommended that a 47-ohm resistor be connected in series with each of the tubes, to insure that they will strike independently and share the load equally.

An additional caution: In Fig. 4 of this article, the pins of the 6SC7 and 6SN7 are misnumbered. The constructor is referred to the *Handbook* for the correct designations.

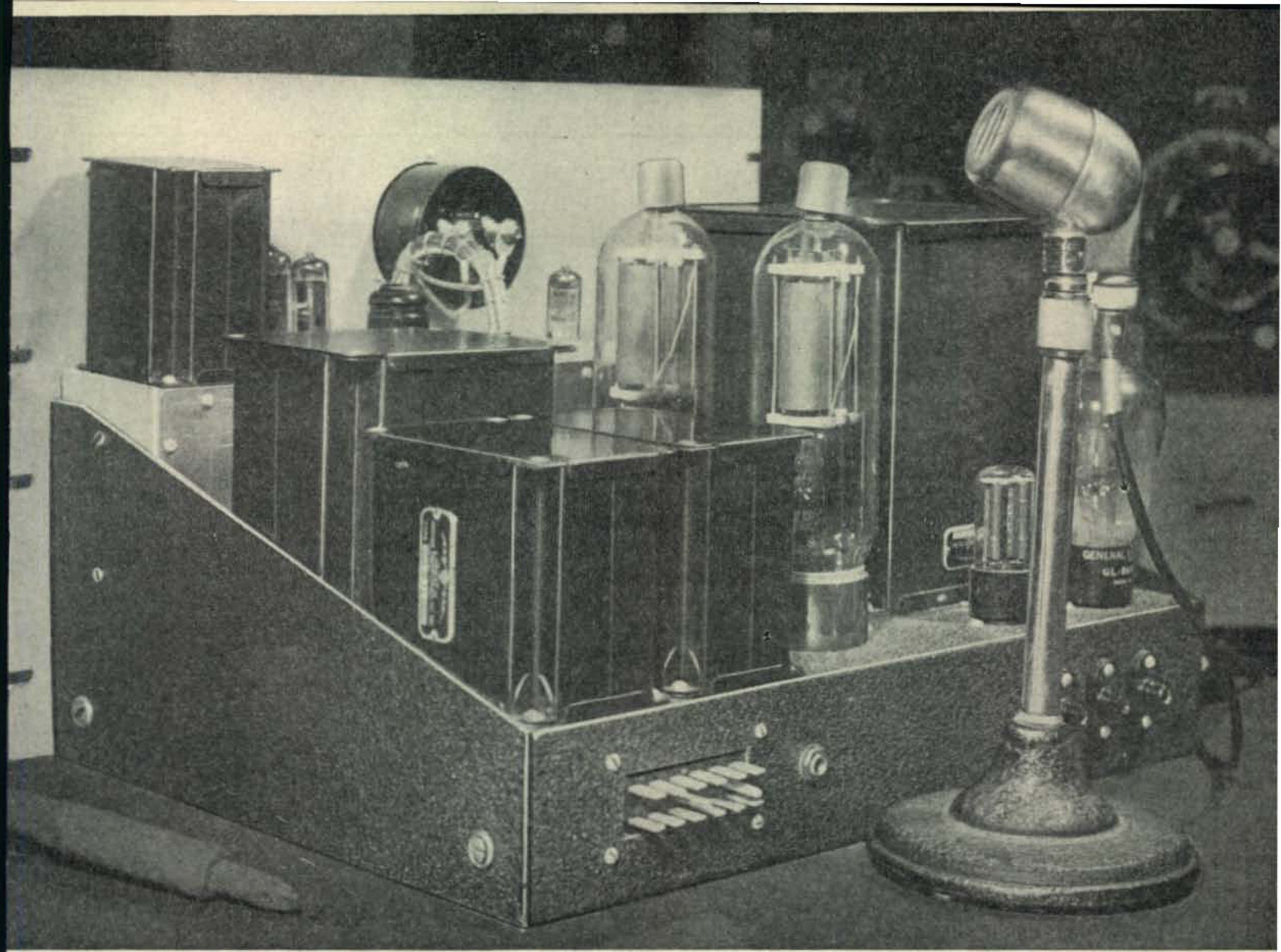

A Phone Man's Modulator

GEORGE H. FLOYD, W2RYT*

THERE IS NOTHING new under the sun as far as Class B modulator circuits are concerned—or is there? In a sense there isn't, as any new circuit idea seems to have only special uses, or perhaps is so revolutionary that no one cares to try it. After all, an input transformer, a pair of tubes, and an output transformer are the essentials of a Class B modulator circuit.

If a new modulator circuit hasn't been invented, how about an up-to-date mechanical arrangement of the parts, with just enough conveniences thrown in to make the whole thing practical and usable? Here then, is a phone man's idea of a modern Class B modulator.

Photograph A gives the panel view of the modulator. The extra switches and pilot lights are present because this unit acts as the master control for the rig, with filament ON-OFF and plate ON-OFF switches, as well as the PHONE-C.W. switch. The two knobs in the center control the speech amplifier, and the meter reads the plate current to the modulator tubes.

Including the speech amplifier on the same chassis as the modulator was something that the author had wanted to try for a long time. There are several disadvantages, usually, resulting from such an arrangement. For one thing, in order to work on the speech amplifier, it would be necessary to wrestle around at least a hundred pounds of modulation equipment. Also, if the speech amplifier were needed for some other job, it would not be available, at least in the portable category. Lastly, when the speech amplifier was rewired, as it usually is every year or so, there would be either a chopped-up chassis which would detract from the appearance of the modulator, or it would be necessary to completely rewire speech amplifier and modulator.

All of these points of objection were eliminated

*Tube Division, G. E. Co., Schenectady. N. Y.

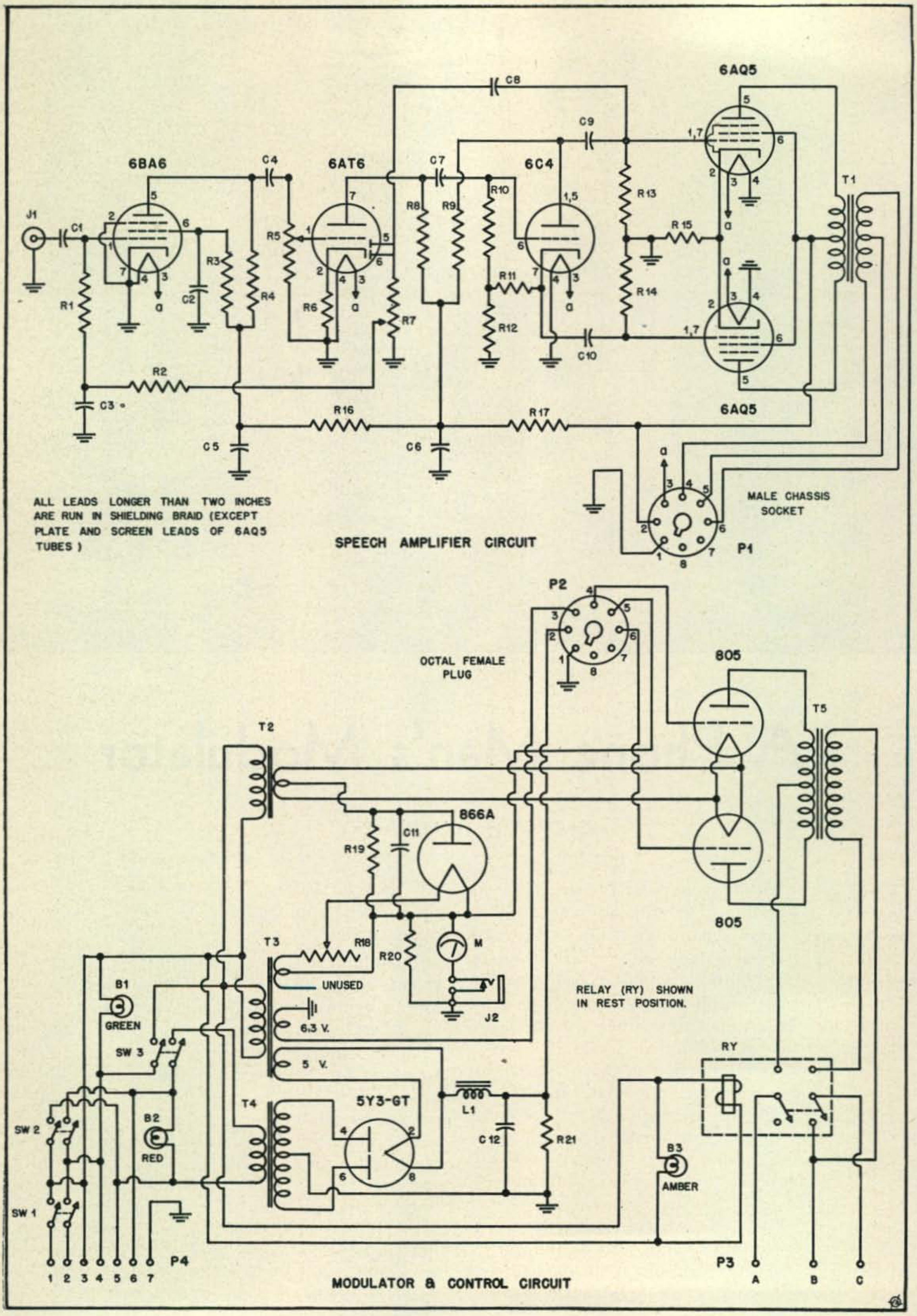

Fig. 1. Complete schematic diagram of the speech amplifier and modulator unit.

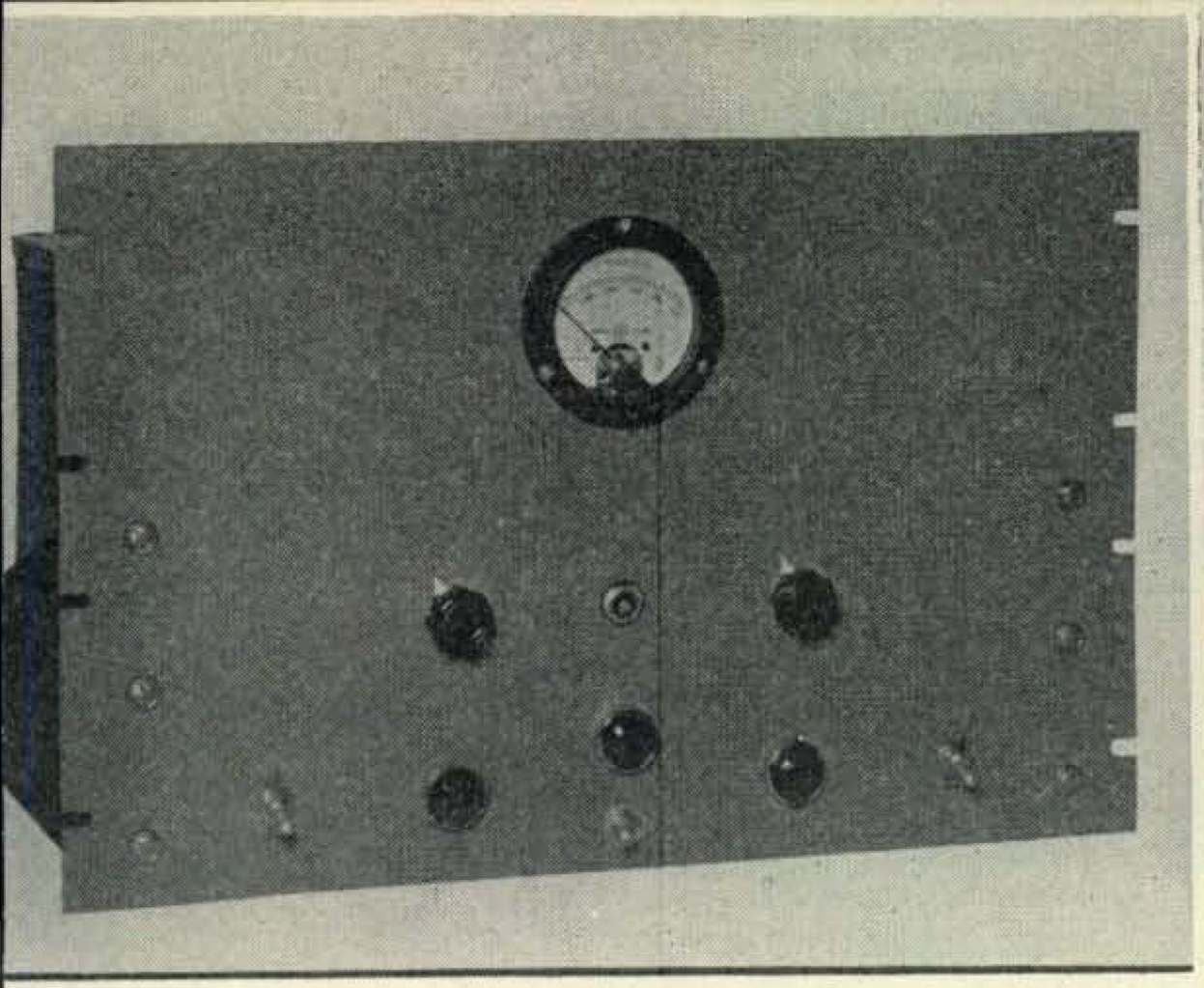

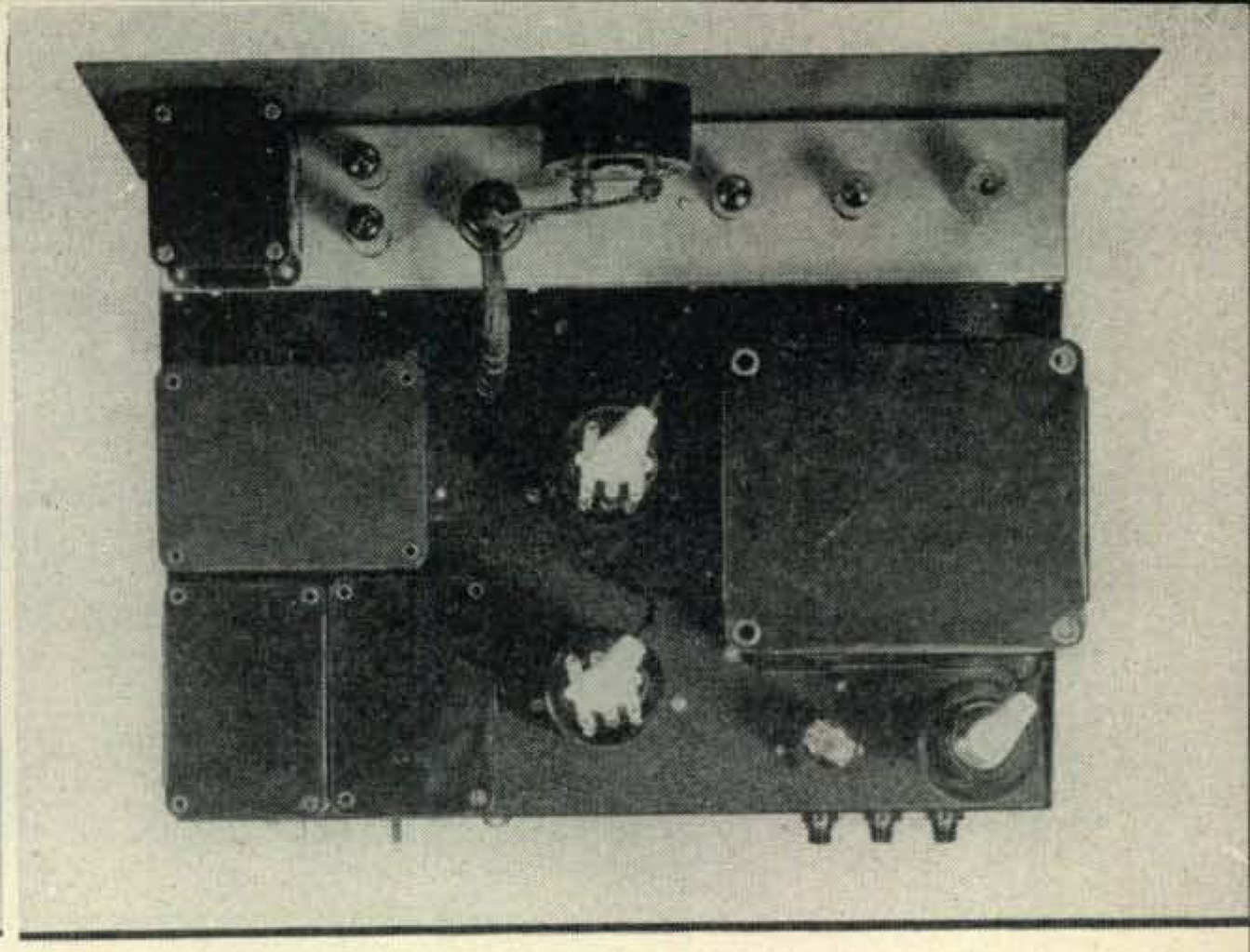

Photograph A (left). Front view of the modulator and speech amplifier. The filament switch and pilot light are on the left, and the plate switch and pilot light on the right. The center switch is the PHONE-C.W. switch, with the pilot light directly above. The knob on the left of the microphone jack is the gain control, while the control on the right is for A.M.C. The 0-500 milliampere meter reads modulator plate current. Photograph B (right). Top view of the modulator chassis and the separate speech amplifier chassis. The two 805 tubes are in the center, while the 866A and 5Y3-GT are located behind the modulation transformer.

Circuit Constants

B1, B2, B3—110-v. pilot lights.
C1, C4, C7—0.02 μf, paper.
C2, C3, C8—0.1 μf, paper.
C5, C6—8 μf, 450 volts, electrolytic.
C9, C10—0.01 μf, paper.
C11—100 μf, 50 volts, electrolytic (two 50-μf 50-v. condensers in parallel).
C12—20 μf, 450 volts, electrolytic (16-μf and-4μf in parallel).
J1—Microphone connector.
J2—Closed circuit jack.
L1—Smoothing choke, 10 h, 150 ma (Kenyon T-165).
M—0-500 ma meter.
P1—Octal male chassis socket.
P2—Octal female plug.
P3—Millen high-voltage terminals.
P4—Twelve point Jones plug.
R1, R2, R3—1 megohm, ½ watt.
R4—250,000 ohms, ½ watt.
R5, R7—500,000-ohm potentiometer.
R6—2,000 ohms, ½ watt.
R8—50,000 ohms, ½ watt.
R9—20,000 ohms, 1 watt.
R10—2 megohms, ½ watt.
R11—2,500 ohms, ½ watt.
R12—17,500 ohms, ½ watt.
R13, R14—470,000 ohms, ½ watt.
R15—250 ohms, 1 watt.
R16—5,000 ohms, ½ watt.
R17—2,000 ohms, 1 watt.
R18—1 ohm, 20 watts, semi-adjustable.
R19—100 ohms, 25 watts.
R20—10 ohms, 10 watts.
R21—9,000 ohms, 20 watts.
RY—High-voltage relay, DPDT, 110-v. coil (Leach 1557 MX).
SW1, SW2, SW3—Heavy duty DPST toggle switch.
T1—Driver transformer with primary to ½ secondary ratio of 3.7:1 (Kenyon T271).
T2—Filament transformer, 10 v. at 8 amps (Kenyon T361).
T3—Filament transformer, 5 v. at 3 amps; 6.3 v. at 4 amps; 6.3 v. at 4 amps. (Kenyon T376).
T4—Power transformer, 360-0-360 v. at 150 ma (Kenyon T215).
T5—Modulation transformer, variable match (Kenyon T496).

by designing the speech amplifier so that it fits on a small chassis, which may either be an integral part of the modulator unit, or removed and used as a separate amplifier. A standard 3" x 4" x 17" chassis mounted on its side is used. The photographs give the general layout. What is normally the top of the chassis becomes the side of the chassis upon which the controls are mounted. The bottom now becomes the back, and is covered by a piece of galvanized iron or aluminum. This back is not shown in the picture.

The speech amplifier chassis is large enough to accommodate enough tubes to drive a 500-watt modulator, unless transformer coupling is employed. The amplifier shown is designed around the new miniature tubes, although metal tubes could be used equally well, with a minor rearrangement of components. The entire speech amplifier fits quite nicely onto the modulator chassis, as may be seen in *Photograph B*. The angle brackets which fasten the modulator chassis to the front panel serve as the supports for the sub-chassis. To remove the speech amplifier, it is necessary only to remove the four self-tapping screws which go through the angle brackets, and remove the two knobs from the controls on the front panel.

The rest of the modulator is located behind the speech amplifier. The input transformer isn't present, as it is included on the sub-chassis. However, there are enough transformers to go around, as the power supply for the speech tubes is also included on the modulator chassis.

Circuit Details

The speech amplifier consists of two amplifier stages, a phase inverter, and a push-pull Class A driver stage. The input stage is designed around the 6BA6 miniature tube, a semi-remote cutoff tube which provides high gain as a voltage amplifier. A semi-remote cutoff tube was selected

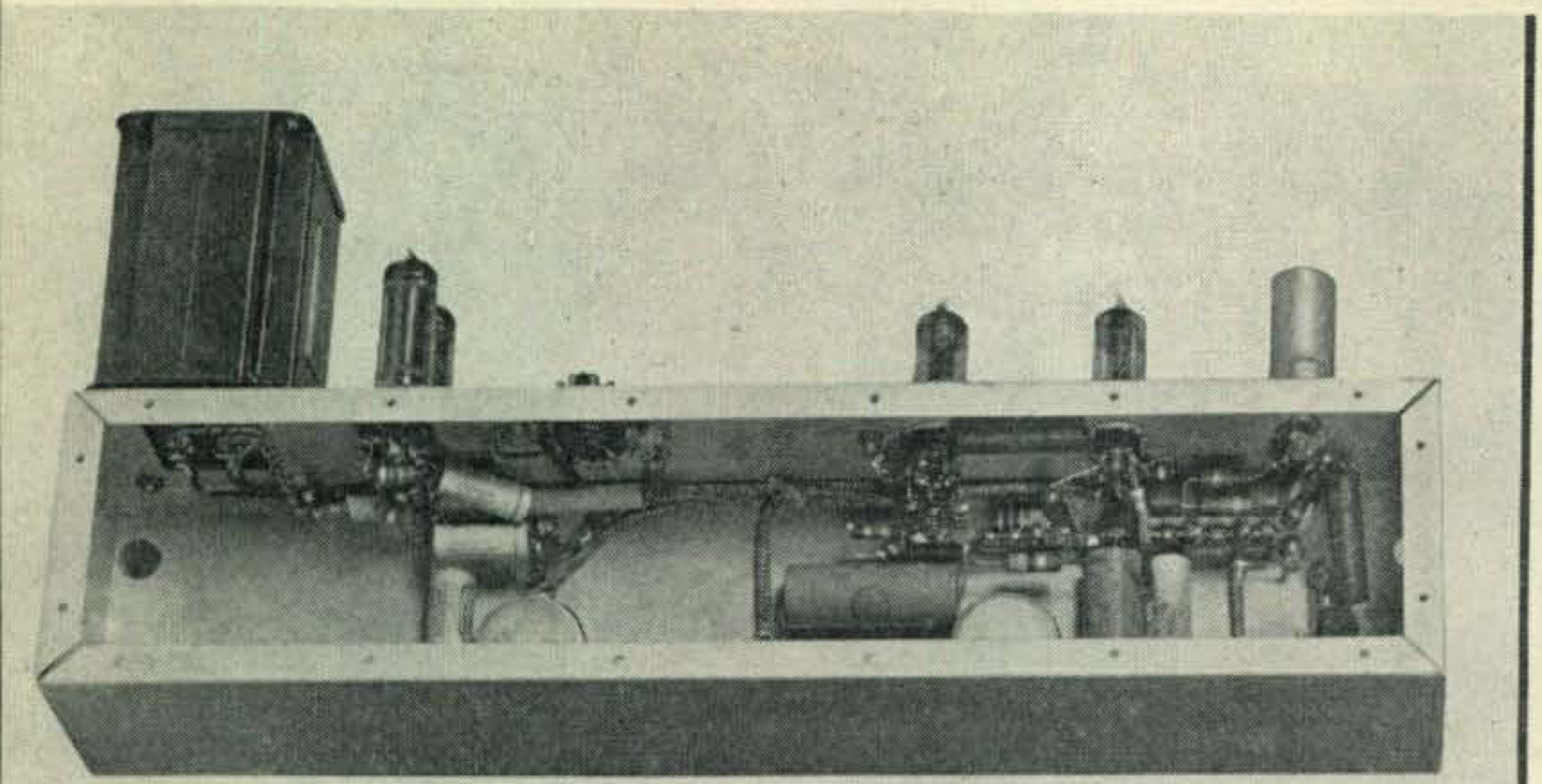

Photograph C. Rear view of the speech amplifier chassis, giving mounting details for the components. Terminal strips are generously used to hold the components in place.

in order to achieve distortionless a-m-c action. The second stage, a 6AT6, acts as both the second amplifier stage and as a diode rectifier to supply the a-m-c bias for the grid of the 6BA6. A.M.C. (automatic modulation control) is incorporated because many hams insist on some automatic type of modulation control. For the old-timers that can't get used to the "new-fangled" stuff, a twist of the wrist is recommended—on potentiometer *R7*. When the arm of this resistor is grounded, there is no a.m.c.

Figure 2 gives an idea of how the voice compression system works. This a-m-c system is not complicated, but it will do a lot of compressing. Further, the amount of compression is easily adjusted by *R7*. If you have an urge to do a lot of whistling while testing, run *R7* all the way over and then see how much harder it is to make that antenna ammeter push up-scale!

Phase inversion for the push-pull drivers is furnished by a 6C4 cathode follower. This stage has excellent frequency response, and yet uses a minimum of parts. The output stage uses the new 6AQ5 miniature tube. This tube is the miniature equivalent of the 6V6 tube. A pair of 6AQ5 tubes in Class A provides 9 watts of power output, with a total harmonic distortion of less than eight percent. The entire tube lineup is modern in every sense. Yet, if it gets out of date, the small chassis can come out, and another take its place.

The selection of tubes to use as the Class B modulators was not a difficult one. The GL-805 tubes fit into the picture naturally, requiring zero bias at most voltages, and only a small amount of bias if they are to be pushed to their maximum input. In addition, full output can be obtained with only 7 watts of driving power. For smaller modulators, the GL-811 tube would have been chosen as it is a zero bias tube regardless of the voltage applied, and takes only 4.2 watts of driving power. Inasmuch as a high power modulator was required by the author, the 805 tubes have been used. With a plate voltage of 1500 volts, they have a rated power output of 370 watts, more than enough to modulate a full kilowatt where voice modulation is considered.

The circuit is standard in every respect, except for the bias scheme. Cathode bias, employing a GL-866A, furnishes a convenient and simple means of obtaining the bias voltage needed if the 805 tubes are to be pushed to full output.* The peak voltage drop in a typical 866A is 15 volts, which gives us enough voltage to keep the 805

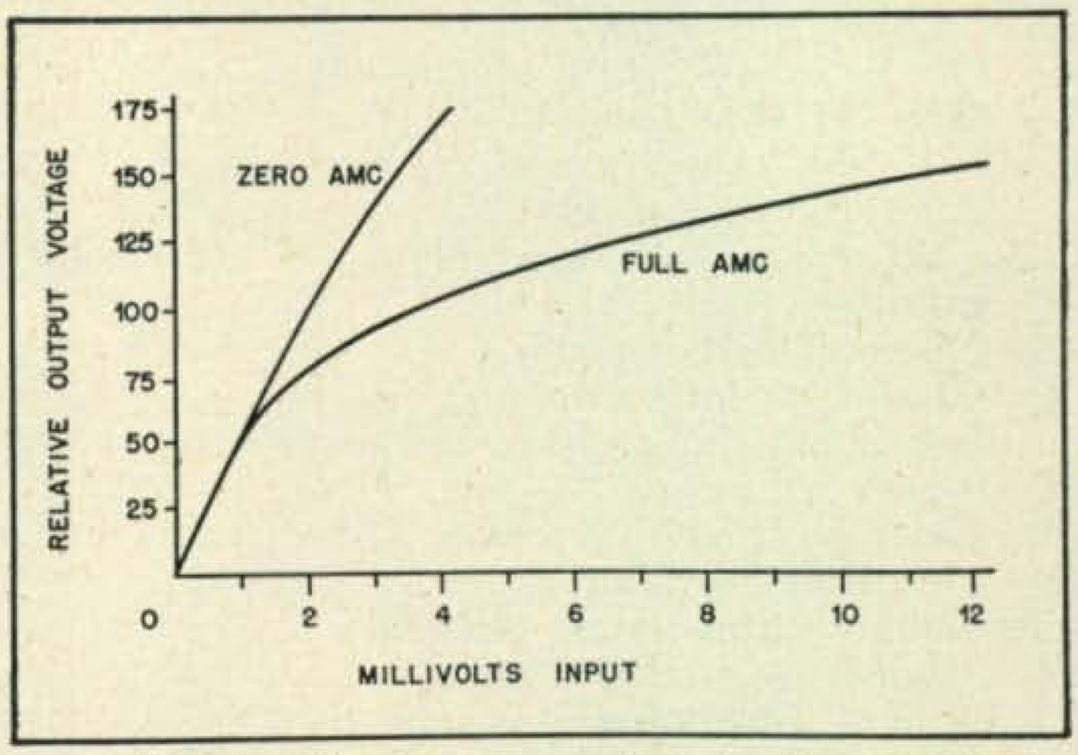

Fig. 2. Automatic modulation control characteristic curve.

tubes under control. In the event that only 300 watts of audio is required, the 805 tubes can be run at 1250 volts and zero bias. The 866A would not be required, and the center-tap of the filament transformer (*T2*) could be connected directly to the meter and its shunting resistor. Resistors *R18*, *R19* and condenser *C11* could be omitted.

A 5Y3-GT tube is used as rectifier tube to supply plate voltage to the speech amplifier tubes. A single choke, *L1*, feeds a resistor-condenser filter network consisting of *C12* and *R21* on the modulator chassis, and *R17*, *C6* and *R16*, *C5* on the speech amplifier chassis.

A twelve-point Jones plug (*P4*) serves as the input plug and output plug for a.c. Terminals 1 and 2 are the main a-c input. Filament a-c leads for use in the rest of the rig come out on terminals 3 and 4, while terminals 5 and 6 serve the same purpose for the plate a.c. Terminal 7

CQ Magazine, March 1947, *"Electronic Bias for Class B Modulators."*

is a ground point, and also may be used as the negative connection for the high voltage leads.

Switch SW 3 acts as a PHONE-C.W. switch, applying voltage to all transformers on the modulator chassis only when it is in the "Phone" position. This switch also controls the high voltage relay (*RY*) which removes the modulation transformer from the circuit for c-w operation. The high voltage terminals, A, B and C (*P3*) are used as follows. Voltage for the 805 tubes connects to terminal A. The Class C final plate voltage from the power supply connects to B and terminal C carries the modulated voltage back to the Class C stage.

Octal plugs are used to connect the modulator chassis to the small chassis. This six-wire line carries the plate voltage to the speech amplifier tubes, as well as the output of the driver transformer. The center tap of *T1* is carried into the modulator chassis so that the meter in the cathode circuit of the 805 tubes will read plate current only, which would not be the case if the transformer center-tap were grounded in the speech amplifier chassis. The filament power for the speech amplifier tubes similarly comes from the modulator chassis.

Jack *J2* is a remote takeoff to read modulator plate current. This makes it convenient to mount another 0-500 milliameter on the operating table to monitor your modulation. When a meter is connected to *J2*, both meters are in series. Resistor *R20* provides a cathode return to ground for the modulator tubes if the meter circuit is accidentally opened.

It will be noted that the filament transformer, *T3*, does not have a 2.5-volt winding. It was therefore necessary to use a 6.3-volt winding to supply filament power to the 866A. Using one-half of that winding, it is necessary to drop the 3.15 volts down to 2.5 volts. This drop of .65 volts requires a resistance of 0.13 ohms, so a 1-ohm 20-watt semi-adjustable resistor (R18) was used. This seems like a very high wattage, but the actual resistance in use is very small, and it is necessary to dissipate 3.25 watts in the .13 ohms of resistance used.

Mechanical Considerations

This modulator is no harder to build than any metal-chassis unit, and no special work of any kind need be done, with the exception of the flat piece of metal which covers the back of the small chassis. *Photograph C* gives the essential wiring information for the speech amplifier. The shielded tube is the 6BA6, and the other tubes in line are the 6AT6 and the 6C4. An octal male chassis socket is placed next so that it will be convenient for unplugging. The 6AQ5 tubes are mounted next to the driver output transformer. Placement of parts is not critical but it is advisable to shield all leads which are more than an inch or two long, with the exception of the plate and screen leads of the 6AQ5 tubes. The tube socket diagrams in *Fig. 1* indicate that for several of the tubes one element connects to two pins. In each case where this occurs the two pins were tied together. For example, the plate of the 6C4 tube ties to pins 1 and 5. The plate connection to this tube was therefore made to both pins.

In *Photograph C* may be seen a large hole in the front face of the chassis. There are four of these holes, placed so that they clear the large screws which hold the front panel to the two angle brackets. In this way, the small chassis may be brought flush to the front panel. Although not shown in the photograph, ventilation holes near the 6AQ5 tubes would help in keeping the chassis cool. Two holes in the top and two in the removable back should do the job.

(*Continued on page 85*)

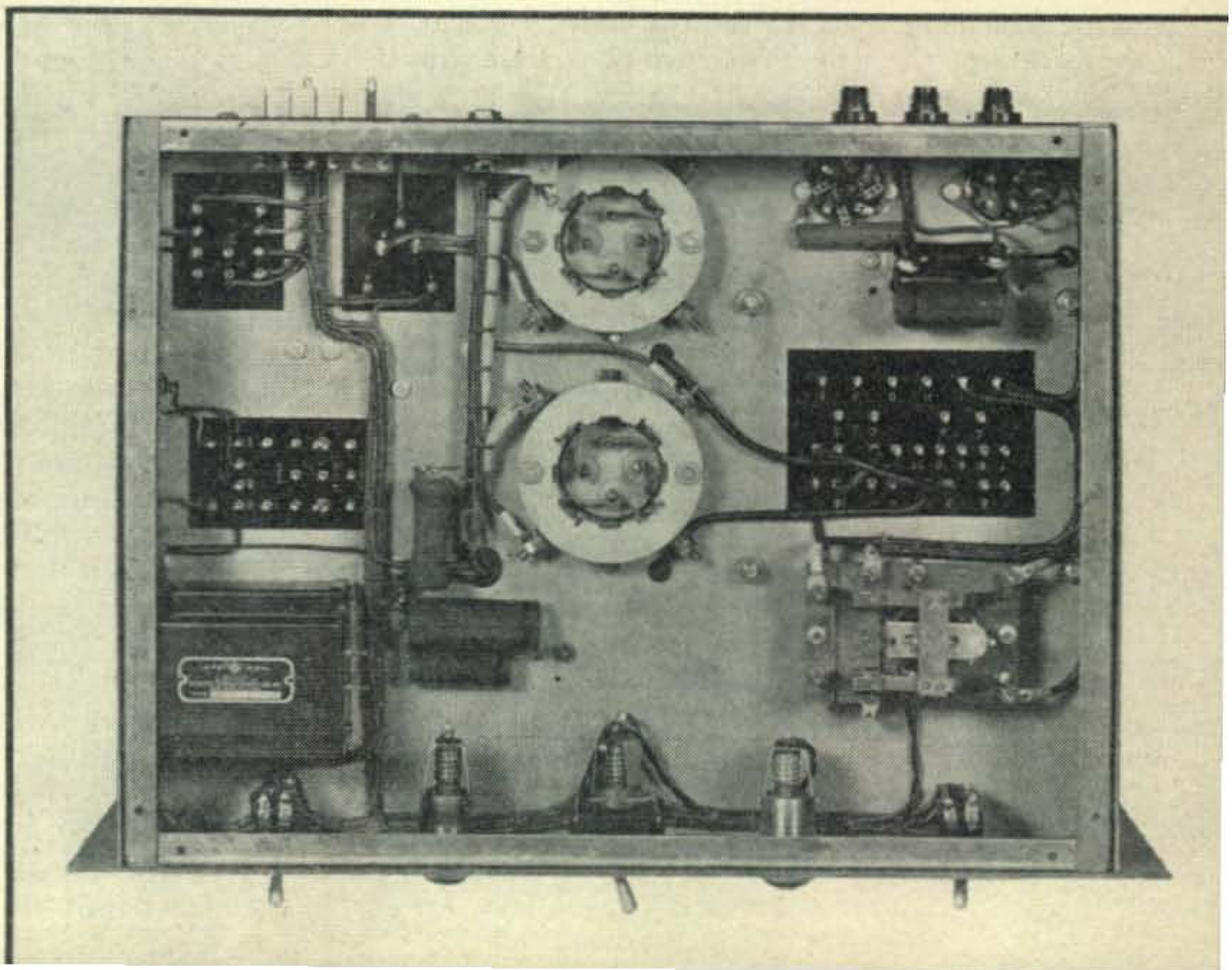

Photograph D. Under-chassis view of the modulator chassis. Neat wiring is made possible by the proper placement of parts.

the bug and its cord may radiate, and you may have to do some filtering at the bug itself, even though you have a filter at the straight key.

Left Handed Bugs

What about left-handers? Most southpaws learn to use a right-handed bug, although at least one manufacturer makes a reversed model. Of course, you can make a left-handed job out of a right-handed one, though it may not look like a thing of joy, by simply disassembling it, drilling a few holes here and there, and reassembling it on the under side of the base.

Now that you realize the work involved to get a bug adjusted, you'll know why it is one of the cardinal sins of radio to monkey with another fellow's bug. There are radio men sailing the seven seas who wouldn't mind if you used their toothbrushes, but who would shove you right across the high voltage if you made a wrong move around their pet bug. Don't say we didn't warn you.

PHONE MAN'S MODULATOR

(*from page 19*)

The microphone jack which is in the exact center of the speech amplifier is mounted so that it extends through the front panel. A large clearance hole is made in the front panel to provide for this. The shafts of potentiometers *R5* and *R7* are cut relatively short so that there is no difficulty in removing the small chassis from the modulator unit.

Photograph B also shows the space behind the speech amplifier chassis. This is necessary so that the small chassis may be moved back to remove the control shafts from the front panel. An inch and a half will allow plenty of room for this.

Under chassis details of the modulator proper are clearly shown in *Photograph D*. The two 805 sockets are mounted under the 3″ x 13″ x 17″ chassis. This was done in order to keep the overall height of the unit small, and as a result, a 12¼″ relay rack panel is used. The filament transformer, *T2*, mounts next to the rear 805 tube, and next to it is *T3*. The large transformer with the extra taps is the plate transformer for the speech amplifier tubes. The extra filament taps can be used in series with the primary, either bucking or aiding, in order to adjust output voltage, especially if a different tube lineup were to be used in the speech amplifier. With the circuit shown this was not necessary, as the right voltage was obtained directly from the secondary high-voltage winding.

The unit mounted on its side is the choke, *L1*. Resistor *R21* and the parallel condenser combination making up *C12* lie between *L1* and the center 805. The high voltage relay is mounted

STANDARDIZED METAL EQUIPMENT FOR ELECTRONICS

BUILD BETTER ELECTRONIC EQUIPMENT with STANDARDIZED READY-TO-USE CABINETS • CHASSIS • PANELS • RACKS

PAR-METAL ELECTRONIC HOUSINGS

for ALL P. A. NEEDS

Par-Metal Equipment is preferred by Service Men, Amateurs, and Manufacturers because they're *adaptable, easy-to-assemble, economical.* Beautifully designed, ruggedly constructed by specialists. Famous for quality and economy.

Write for Catalog.

PAR-METAL PRODUCTS CORPORATION
32-62—49th ST., LONG ISLAND CITY 3, N.Y.
Export Dept.: Rocke International Corp.
13 East 40 Street, New York 16

STANDARDIZED METAL EQUIPMENT FOR ELECTRONICS

In Northern California it's
SAN FRANCISCO RADIO & SUPPLY CO.
Public Address Equipment
Short-Wave Receivers & Transmitters
•
Headquarters For Amateur Radio Supplies
20 Years Dependable Service.
1280-1284 Market St., San Francisco 2, Calif.

Tubes		Tubes		Tubes		Tubes	
804	$ 6.50	6AK5	$ .90	6C6	$ .45	6ST7	$1.00
807	1.00	2051	.85	6A6	.90	6V6GT	.60
811	1.90	UH50	5.50	6C8G	.95	7C5	.80
884	.70	HY65	2.75	6F8G	.75	7F7	.95
866A	.70	VR/150	.70	6J7	.80	7N7	1.20
2X2A	.80	5Z4	.85	6K7	.70	12SH7	.70

Send for our special Bulletin No. 48
ALLIED RADIO WHOLESALERS
2471—18th St., N. W. Washington 9, D. C.

Specials: National RAS-3 (compl. cov. 190Kc/30Mc.)—A/C pwr. suppl., speaker, coilbox, mounted in 40″ H rack—Used but in good operating condition..... **$99.50**
Same as above but separate coilbox—27½″ H..... **$94.50**
DB-20—Practically new—Looks like new..... **$49.50**

RADELCO, INC., 268 West First Street, Mount Vernon, N. Y.
Distributors of amateur radio equipment and parts.

on the chassis with the stand-offs furnished with the relay. The layout as shown allows clean wiring, and in addition, even leaves enough room under the chassis for any other small parts that you might want to add at some time.

Operating Adjustments

When the unit is all set to go, the speech amplifier may be turned on alone with switches *SW1*, *SW2*, and *SW3* if the high voltage is not connected to the rear terminals. The first step would be to adjust *R7* so that the center arm is grounded. This removes the a.m.c. With a signal generator, or just a microphone, apply an input to the input jack. This point takes either a dynamic or a crystal microphone. The gain control (*R5*) should then be turned up and the output checked into whatever load you are using. A 3000-ohm, 10 or 20-watt resistor may be connected across pins 4 and 6 of the octal socket, and will serve nicely as a load. (Remove the 805 tubes from their sockets if you do this.)

If a signal generator is available, a frequency response curve can easily be made, by holding the input voltage constant and measuring the output with an output meter across the 3000-ohm resistor. After this check has been made, the a.m.c. may be turned on by control *R7* and the curve of *Fig. 2* verified. If the a.m.c. does not seem to be working correctly, check to make sure that your connections are all made properly, as this type of compression is not at all tricky, and no trouble should be experienced.

If a scope is available, the output may also be checked by this means. It is always advisable to be able to look at the output wave. In some cases this wave may not be symmetrical. If this happens to be the case, the first point to look at is the phase inverter circuit. Resistors *R9*, *R10*, *R11* and *R12* should be changed in value, one at a time, until this condition corrects itself.

Voltages on the speech amplifier tubes are not too critical, but should be approximately the following values:

Tube	Plate voltage (Measured at plate pin)
6BA6	70-75
6AT6	135-150
6C4	125-130
6AQ5s	250 (maximum)

With the 250 volts on the plate and screen of the two 6AQ5 tubes, the current should be approximately 90 milliamperes in the plate circuit and 9 milliamperes in the screen circuit (both tubes).

The modulator circuit should need no adjustments, but it might be wise to measure the bias voltage across the 866A tube. Any value from 9 to 15 volts is acceptable. Feed the high voltage into terminals A, B and C, and you are on the air.

LEEDS The house you have known for 25 years

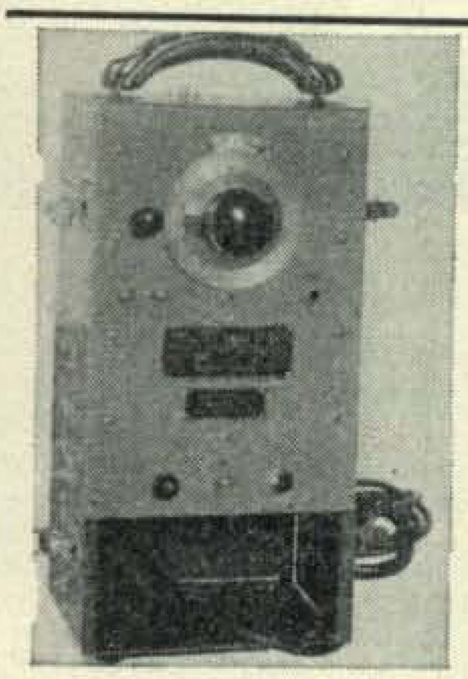

BC—438 FREQUENCY METER

110 volt AC operated, range 195 to 215 megacycles; complete with tubes, crystal, calibration curves and schematic; only..... $9.95

SELSYNS: Type 5 Syncro Transmitter, used in pairs as transmitter & Follower: 110v AC, 60 cycle. Pair.....$5.00

CIRCUIT BREAKERS: 110v AC; Heineman 5 amp magnetic..... .95

CRYSTAL DIODES: 1N21-B; swell for field strength meters or rectifiers. .35 each,.....3 for$1.00

METERS: G.E. 3″—0-1 Ma DC..... 3.50
G.E. 2″—0-1 amp RF..... 2.45
50 microvolt 3″ with arbitrary scale..... 1.95

WIRE WOUND POTENTIOMETER

100,000 ohm, precision made, G.R. type; 25 watt, 6″ diameter. Brand new $1.95

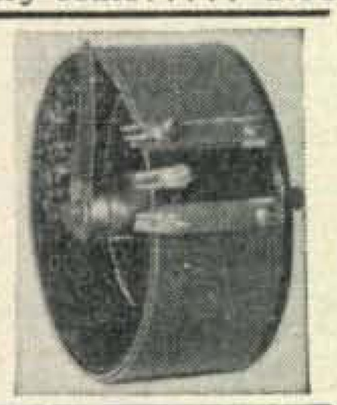

RG/8U co-axial 52 ohm outdoor cable; 100 ft..... 4.50

300 ohm Twin Lead cable, indoor or outdoor 100 ft..... 2.95

NATIONAL HIGH Q PERMEABILITY TUNED R. F. COILS

AR-2 Tunes from 75 Mc to 220 Mc.....$1.71
AR-5 Tunes from 37 Mc to 110 Mc..... 1.46
XR-5 Slug coil forms 11/16″ winding length ½″ diameter, slug 3/8″ dia.x½″ long..... 1.01
Complete stock of NATIONAL CO. products on hand

RADIO TRANSMITTER & RECEIVER APS 13

tunes 410-420 megacycles; light weight air-borne Radar. 17 tubes, including 5-6J6; 9-6AG5; 2-ZDZ1; 1-VR-105 and 30 Mc. I.F. strips with schematic. All for.... $11.95



AMERTRAN TRANSFORMERS

K-243 Universal single or push pull tubes; 20 watt primary; 3000/5000/6600/7000/8000/10000 C.T. secondary adjustable 1 to 30..... 2.94
K-290 P.P. 6L6 class AB primary 4300 ohm; secondary 4/8/15/250/500; 25 watt.....$4.82
K-354 Universal Modulation, 100 watt primary, 175 Ma; secondary 175 Ma series, 350 Ma parallel.....$16.50
K-416 10 volt C.T. @ 8 amps, 7500v test..... 3.72

OIL FILLED CONDENSERS

1 Mfd 5000v DC Spec	$2.95	2 Mfd 600v DC	.49
2 Mfd 10000v DC	17.50	10 Mfd 600v DC	.98
16 Mfd 400v DC	.98	.02 Mfd 8000v DC	.98
2x.1 Mfd C-D type DYR 600	.25	7 Mfd 330v AC	1.25

THIS MONTH'S SUPER SPECIAL

24 conductor stranded, rubber covered cable; 25 foot length with Jones plugs..... .75
Sigma Sensitive RELAY, 2000 ohms, 4 Ma. hermetically sealed. Mounts in 5 prong socket..... .95

If not rated 25% with order, balance C.O.D.
All prices F.O.B. our warehouse New York
No order under $2.00
We ship to any part of the globe

LEEDS RADIO CO.

75 Vesey St., Dept. CQ10
COrtlandt 7-2612 New York City 7

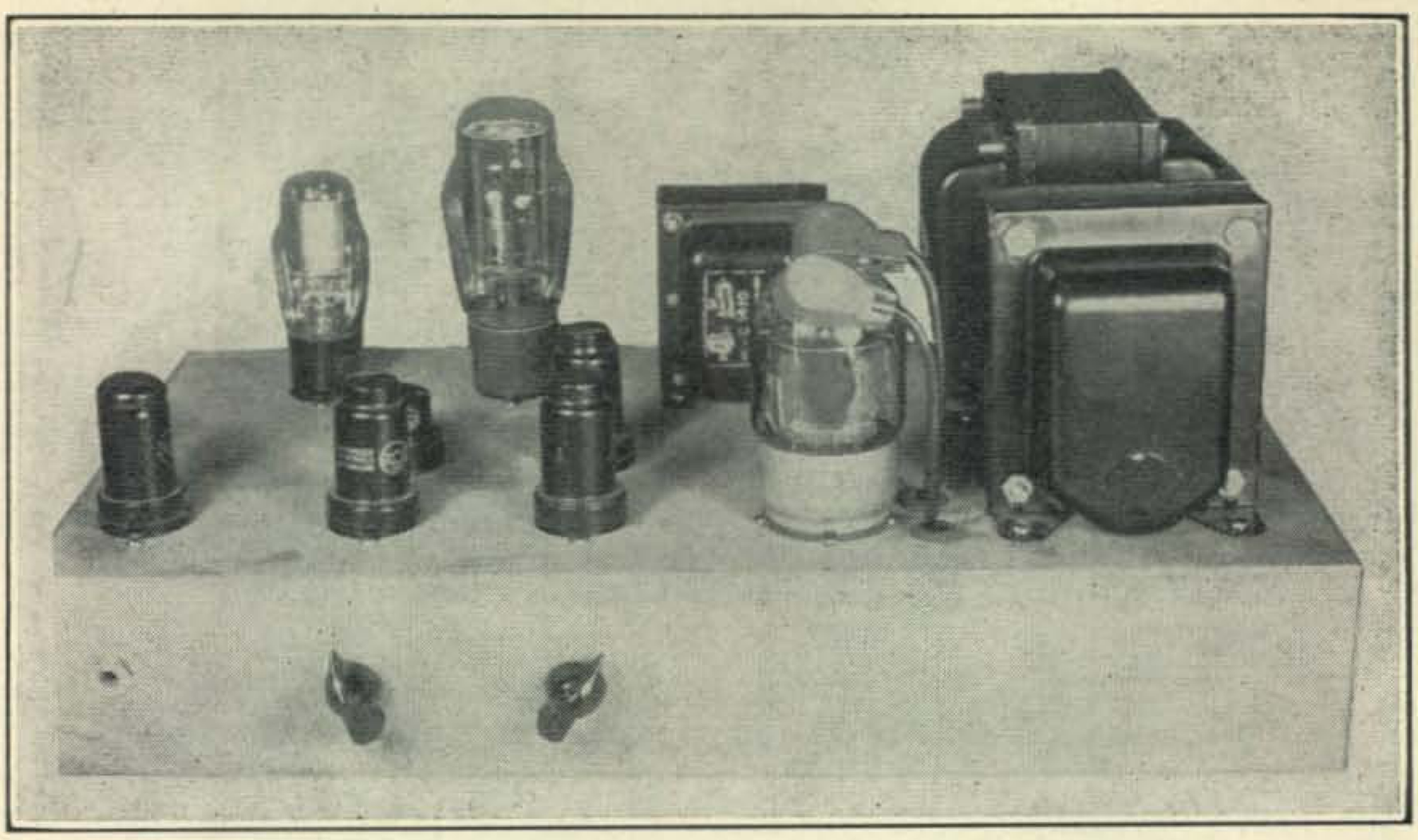

Fig. 1. Over-all view of the modulator, with cover removed.

An Economical 50-Watt Modulator

RUFUS P. TURNER, W1AY*

THE TYPE 815 dual beam tube, now an old hand in amateur radio, makes possible a small, self-contained, low-cost 50-watt modulator. The audio possibilities of this small-sized tube in Class AB_2 service are overlooked by many transmitter builders.

The 8-tube modulator unit described in this article employs an 815 in the output stage to give a measured power output of 50 watts. Full a-m-c operation is provided, and the entire unit, including the power supply, is built on a single 17" x 10" x 3" metal chassis. The author's model employs a single "foundation-type" dust cover of perforated steel, 17" x 10" x 10" in size, but panel-and-chassis construction and "dishpan" mounting are equally feasible. Sufficient over-all gain is provided to accommodate any of the crystal microphones commonly employed in amateur work, and the modulator will be suitable for use with any plate-modulated Class C amplifier having 100 watts input.

Circuit Description

The first stage employs a 6SK7 running wide open and with constants for high gain. The suppressor of this tube receives the a-m-c bias. The intermediate stage containing manual gain control *R6*, comprises a single 6J5 section transformer coupled to the succeeding 6J5 push-pull driver stage. The 815 output stage is operated at −15 volts fixed bias obtained from a tap on the power supply voltage divider, *R21*. A multimatch type output transformer permits coupling to any one of a variety of Class C plate impedances.

Automatic modulation control bias is obtained by rectifying a portion of the audio voltage presented to the 815 grids. The plates of the 6H6 a-m-c rectifier are connected to opposite ends of the secondary winding of the 815 input transformer through the resistor-capacitor combinations, *C11-R9* and *C12 R10*. Potentiometer *R16* permits adjustment of the a-m-c threshhold.

Screen voltage to the 815 tube is regulated by means of the OD3/VR150 tube in the power supply section. Regulation of this voltage is very important to full power output.

The various separate voltages required by the low-level and output stages are obtained from taps on the power supply voltage divider, *R21*.

The power supply section comprises power transformer *T4*, filter chokes *CH1* and *CH2*, filter capacitors *C16* to *C19*, and the voltage divider. The rectifier tube is a 5R4-GY and the screen voltage regulator an OD3/VR150. The electrolytic filter capacitors are series connected for higher working voltage and each is shunted with a 0.5-megohm resistor (*R17* to *R20*) to equalize voltages across these capacitors. Resistor *R22* limits the current through the regulator tube.

Rear-chassis terminals are provided for the output leads from modulation transformer *T3* and for an external 0-200 d-c milliammeter. Capacitor *C13* bypasses the meter for r.f.

It is recommended that the reader planning to duplicate this modulator use the identical component values specified in *Fig. 2*. Substitutions may be made in the case of the chokes and transformers specified,

*P.O. Box 345, New Bedford, Mass.

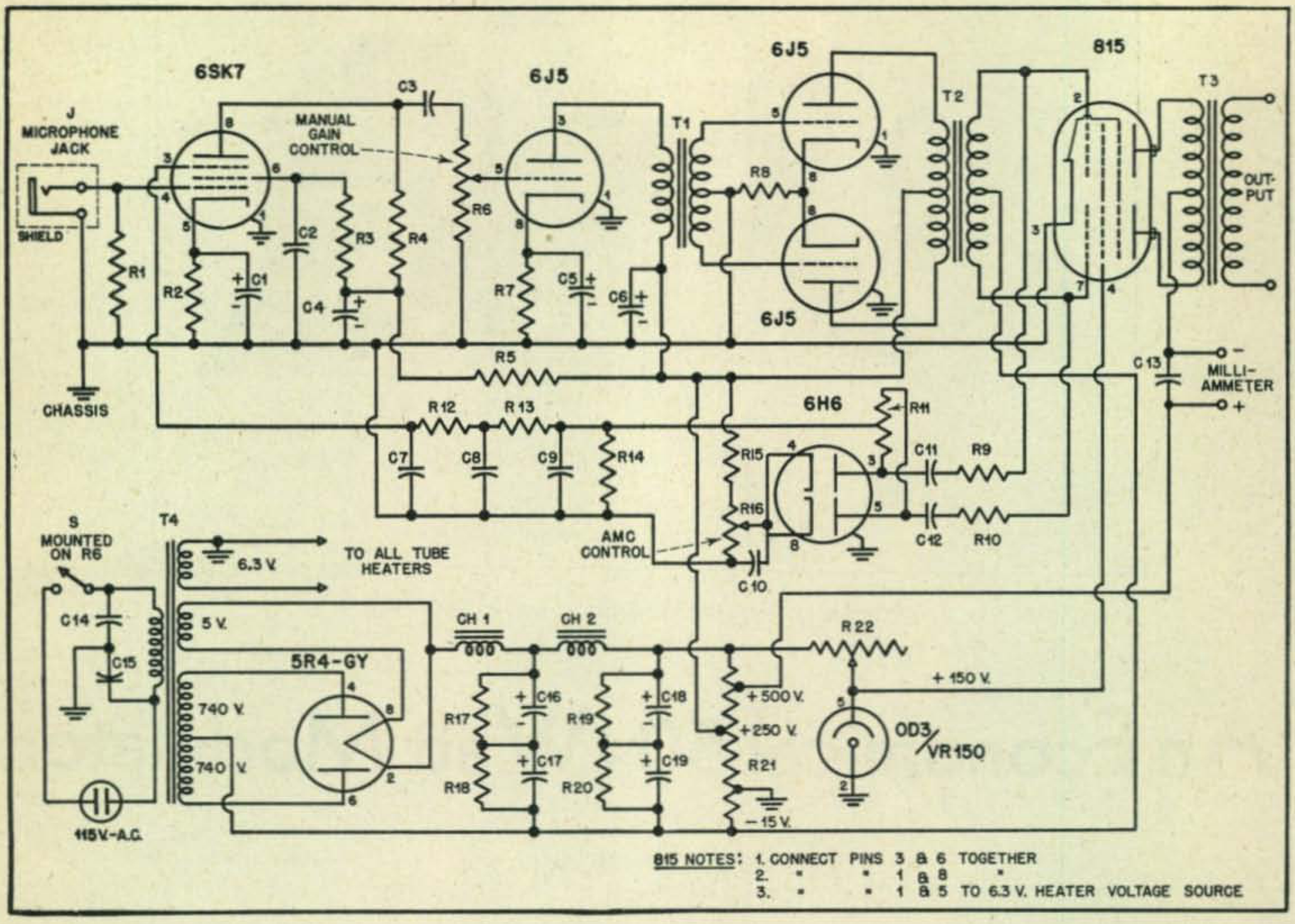

815 NOTES: 1. CONNECT PINS 3 & 6 TOGETHER
2. " " 1 & 8 "
3. " " 1 & 5 TO 6.3 V. HEATER VOLTAGE SOURCE

C1—20 μf, 50 volts, electrolytic.
C2, C7, C8, C11, C12-0.1 μf, 400 volts.
C3—0.01 μf, 400 volts.
C4, C6—8 μf, 450 volts, electrolytic.
C5—20 μf, 50 volts, electrolytic.
C9—0.25 μf, 400 volts.
C13—0.005 μf, mica.
C14, C15—0.1 μf, 200 volts.
C16, C17, C18, C19—20 μf, 450 volts, electrolytic.
J—Midget open-circuit phone jack with shield can.
R1—5 megohms, ½ watt.
R2—2000 ohms, 1 watt.
R3—2 megohms, ½ watt.
R4—500,000 ohms, 1 watt.
R5—50,000 ohms, 1 watt.
R6—1-megohm potentiometer.
R7—1500 ohms, 1 watt.
R8—750 ohms, 1 watt.
R9, R10—1½ megohms, 1 watt.
R11—200,000 ohms, ½ watt, center tapped (two 100,000-ohm units in series).
R12, R13—250,000 ohms, ½ watt.
R14—100,000 ohms, ½ watt.
R15—100,000 ohms, 1 watt.
R16—50,000-ohm wirewound potentiometer.
R17, R18, R19, R20—500,000 ohms, ½ watt.
R21—100,000-ohm 100-watt wirewound resistor with 3 sliders.
R22—25,000-ohm 100-watt wire wound resistor, 1 slider.
S—SPST toggle switch, mounted on gain control R6.
CH1, CH2—15 h., 200-250 ma. (Stancor C-1410).
T1—Interstage audio transformer 2:1 ratio (Stancor A-62C).
T2—Driver transformer (Stancor A-4712).
T3—Multimatch output transformer (60 watts) 200 ohms plate-to-plate to Class C load (Stancor A-3893).
T4—Power transformer: 740-0-740 v., 275 ma; 5 v., 3 amp. 6.3 v., 7 amp. (Stancor P-6315).

provided the components used have the same electrical characteristics as those listed.

Mechanical Construction

The modulator is not a complex piece of apparatus. Its assembly therefore is quite simple. In building this equipment, it is necessary only to follow the usual rules of good electrical construction—that is, mount components in such a way as to prevent undesired electrical coupling, and keep all leads as short and direct as practicable. Extensive shielding of leads will not be necessary, although it is advisable to enclose the microphone jack, *J*, in a small tight-fitting shield can and to cover the lead from the jack to the No. 4 contact of the 6SK7 tube socket with shield braid throughout its entire length. This braid also must be bonded to chassis at both ends of the lead.

Magnetic fields from transformers and chokes usually cause much trouble in ham-built modulators. With this in mind, the author oriented these components on the chassis to obtain the best electrical positioning. The best core directions are indicated in the photo. Transformers *T3* and *T4* and filter choke *CH2* are mounted on top of the chassis. Transformers *T1* and *T2* and filter choke *CH1*, all being smaller-sized units, are mounted under the chassis with their cores at right angles with respect to each other.

The microphone jack and the two potentiometers are mounted through the front lip of the chassis. For simplicity, the ON-OFF line switch has been

attached to the manual gain control. If the reader desires, he may include a separate toggle switch.

For safety to the operator, the top caps of the 815 are provided with insulated grips, and heavy insulated leads from these connectors pass through grommet-lined holes in the chassis to the output transformer terminals.

Adjustment and Operation

After completing the wiring, the first adjustments must be made in the power supply section. The three sliders on resistor *R21* must be set with the aid of a high-resistance d-c voltmeter to the voltage values (measured between slider and chassis) indicated on *Fig. 2*. When making this adjustment, keep gain control *R6* at minimum and set *R22* to maximum. The 500-volt slider must be set finally under load; that is, with the 815 drawing full load under excitation. This will be explained later.

After the three sliders on *R21* have been set preliminarily, connect a 100-watt wirewound resistor, having the same value in resistance as the intended Class C final amplifier plate impedance, to the modulator output terminals. Set a-m-c control *R16* to minimum, plug in a microphone and (with power off!) connect a 0-200 d-c milliameter to the meter terminals on the back of the chassis. Advance gain control *R6* and whistle a constant tone slowly into the microphone, noting the amount of upswing of the milliammeter. (This should not exceed 150 ma on peak.) Temporarily open the lead between pin 2 and ground on the OD/VR150 regulator tube and connect a 0-50 or higher d-c milliammeter from pin 2 to ground. Adjust the position of the slider on *R22* so there is less than 30 ma flowing with the r-f gain control turned to minimum setting. With the gain control fully advanced and maximum speech level fed through the amplifier, the current through the VR150 should not drop below 8 ma. Note whether the voltages change at the taps on *R21* when the modulator is in actual operation. It is very likely that these voltages, especially the 500-volt value, will fluctuate during operation, and the sliders must be reset for exact voltages under these operating conditions.

When all adjustments have been made properly, the three voltages delivered by *R21* will be reasonably constant under load; that is, when speaking into the microphone. The 815 screen voltage will hold to 150 and the 815 plate current will kick up to 150 milliamperes.

The modulator should be connected to the r-f portion of the transmitter, and an oscilloscope, if available, set up for trapezoidal patterns, provided for adjustment of the a-m-c section of the modulator. Advance gain control *R6* to about half maximum and whistle or hum a sustained tone into the microphone, noting the modulation percentage as indicated by the oscilloscope pattern. Find the setting of *R6* for slightly more than 100% modulation. Now, advance the a-m-c control, while continuing to whistle into the microphone. At the proper setting of *R16*, especially in relation to the setting of *R6*, a-m-c action will maintain a level modulation percentage (as observed on the oscilloscope screen), although the operator may whistle or speak loudly or softly. It is best not to adjust for exact 100% average modulation, but rather to set gain control *R6* for a slightly lower value, giving best freedom from distortion as evidenced by listening tests with a simple phone monitor.

M. V. A. R. C. Fire Net

WANTED: One person in the Merrimack Valley section of Massachusetts who will make a fuss because hams are interfering with reception on broadcast sets . . .

Seriously, since members of the Merrimack Valley Amateur Radio Club performed such fine work during the recent forest fire emergency, residents are no longer disposed to argue about faulty reception that might be caused by amateur radio activities. Fire department authorities, conservation officials and the general public were loud in their praise of the results accomplished by club members in spotting fires and directing the flow of fire-fighting equipment via their ham stations during the emergency.

Using a Stinson 150, club members flew over the fire area twice daily and performed heroic service for the communities affected. Mobile cars also were used to speed to fire scenes with information received from the plane above. Approximately 100 emergency messages were handled and relayed to forest wardens. Club members also reported ten fires which had not been spotted previously, and as a result, equipment sent to these locations averted further conflagration.

The club is now on top listing of units to be commandeered by officials in the event of future emergencies.

Members of MVARC who participated in the Massachusetts fire net. Left to right: Witkiewicz, W1KNU; McAndrew, W1BLO; Wilkinson, W1CRW; Simone, W1QIT; Loeffler, W1PFA (ground control station); Hart, W1LBM; Sharkey, no call; Waldo Holcombe (owner and pilot of plane); Nilus, W1NZS (worked aircraft portable); Bembe, W1QGH; Cookson, W1MQN; Sevigny, W1IGO; Ingalls, W1JDK; Lesure, no call; Arnfield, W1NNG; Krukonis, W1CBY.

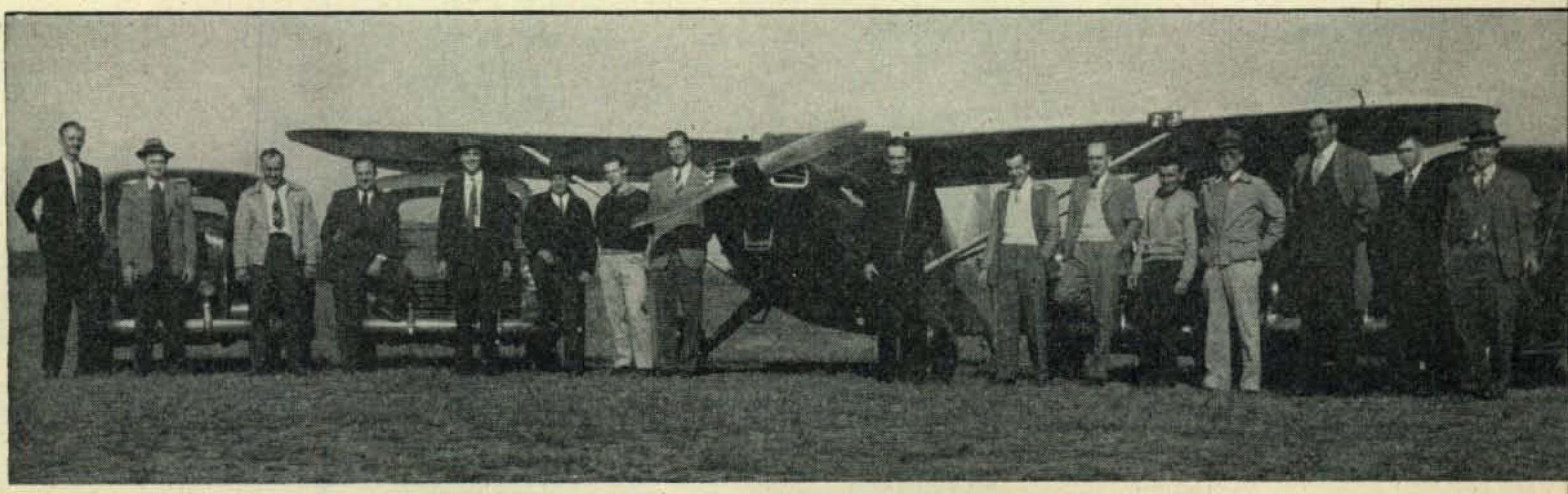

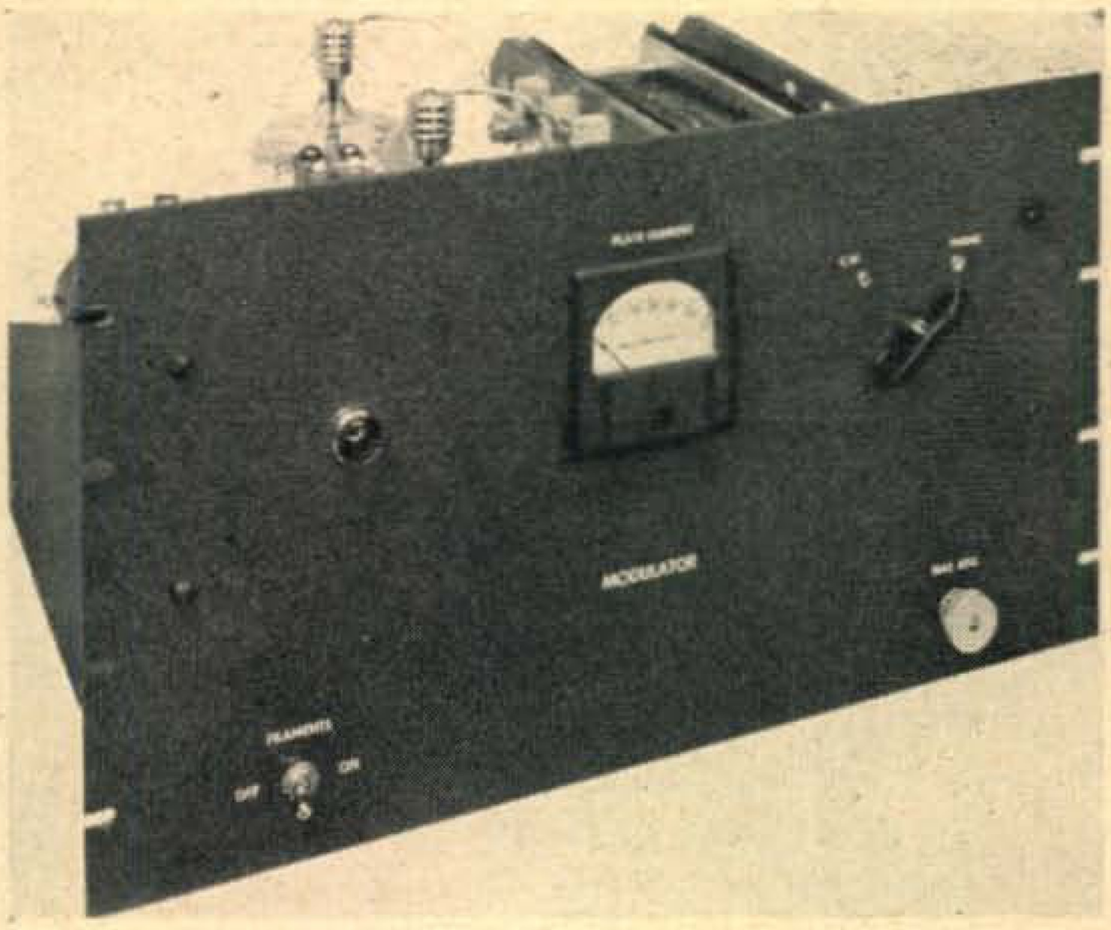

MODULATING A KILOWATT

ROBERT C. CHEEK, W3LOE*

Zero driving power and inherently distortion-free operation are only two of the advantages of Class AB_1 operation of a modulator. Here's a way to attain it with a minimum of expense.

SINCE CLASS B MODULATORS were pioneered by amateurs nearly twenty years ago, Class B has been practically the only system even considered for high-level amplitude modulation in medium- and high-powered amateur transmitters. Prior to the advent of the surplus market, this practice was probably justified by the fact that tubes capable of producing a given amount of audio power in Class A or Class AB_1 were considerably more expensive than tubes capable of similar output in Class B, and the additional difficulties of the latter method of operation were more than offset by economic considerations.

However, the present-day amateur who contemplates running high power on phone should consider the advantages of Class AB_1 modulator operation. The well-known 304TLs, so plentiful on the surplus market, make Class AB_1 operation possible at a tube cost much lower then that for tubes that would normally be used in a Class B modulator for similar power.

But tube cost is only the beginning of the story, for Class AB_1 operation has many other attractive features, most of them contributing further to the economies that can be effected by using 304TLs.

Class AB_1 operation, by definition, implies that no driving power is required, because grid current does not flow during any part of the excitation cycle. This means that a voltage amplifier can be used to excite the grids of a Class AB_1 modulator. Problems of driver regulation, so important with Class B, are eliminated, and, with them, the need for expensive driver transformers and low-impedance driver tubes. If the exciting voltage required for a Class AB_1 modulator is higher than that available by resistance coupling from a voltage amplifier with conventional 300-volt plate supply, a small interstage audio transformer can be used to step the voltage up to the required value. This is done in the modulator to be described here.

The fact that no grid current is drawn by the modulator tubes also means that bias supply regulation is inconsequential, provided only that the d.c. resistance of the modulator grid return path is within recommended limits. In the modulator shown, bias for the 304TLs is obtained at practically negligible additional cost from the plate winding of the power transformer used to supply the speech amplifier.

Another advantage of zero-grid-current operation is that the plate milliammeter can be placed in the modulator filament return path and there will indicate true plate current, unobscured by grid current changes.

A really major advantage of Class AB_1, however, is one that cannot be evaluated in terms of dollars or ease of construction. This is the relative freedom from distortion that Class AB_1 operation affords as compared with the usual Class B modulator without inverse feedback. The reason for this characteristic is again the fact that no grid current is drawn. This means that there is no sharp discontinuity in the grid characteristic. Also, the operating point is in the linear region of the grid-voltage/plate-current characteristic, with the plate current well above cut-off, and practically Class A operation is obtained except on speech peaks. Although the ultimate in freedom from distortion is not necessary for entirely satisfactory intelligibility for communication purposes, reduction in distortion means a corresponding reduction in higher-order sidebands in the transmitted signal, an important consideration in the light of the present-day congestion of bands.

There is one feature of Class AB_1 operation that is in some respects a disadvantage. This is the relatively high static plate current that Class AB_1

*R.F.D. 4, Irwin, Pa.

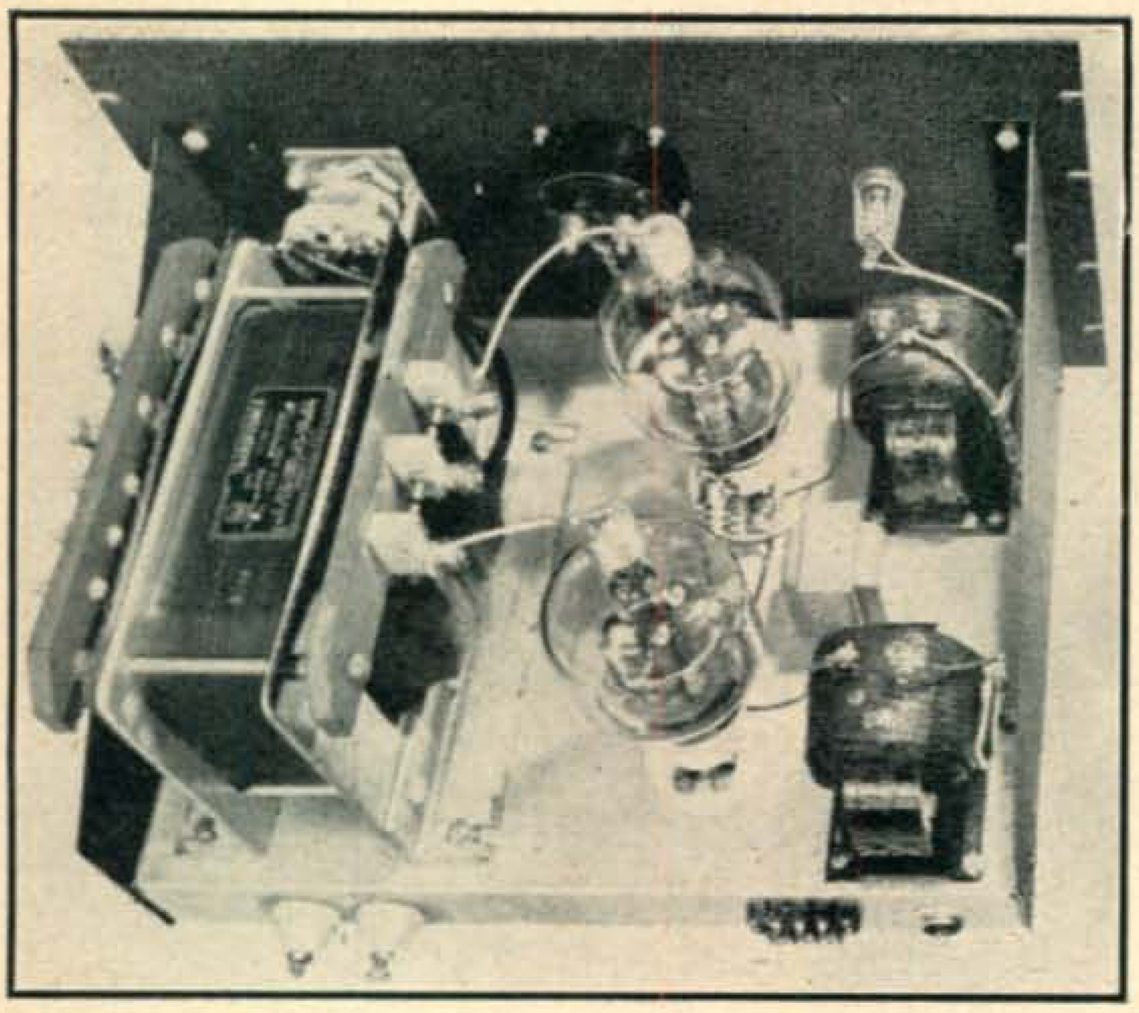

Top view of chassis. A 17" x 13" x 2" heavy-duty chassis is used. The exciting transformer is the small unit at the center to the left of the tubes. The two large transformers at the extreme left are the filament transformers.

operation inherently requires. For continuous commercial operation at high power, this consideration would be an important one from the standpoint of the power bill, but it is not a major factor in the intermittent type of service involved in amateur operation, and, furthermore, this characteristic has an offsetting advantage—it materially eases plate supply regulation requirements as compared with Class B.

Characteristics of 304TLs in Class AB_1

The curves of *Fig. 1* show recommended operating limits for type 304TL tubes in Class AB_1 at plate voltages from 1500 to 3000 volts. The small circles on these curves are the typical operating conditions given by manufacturers' data sheets. Experiments with different operating conditions have shown that considerable departure from the recommended load impedance curve is permissible without the introduction of appreciable distortion. For example, with 2500 volts on the modulator and the Class C plates, and with a unity-ratio modulation transformer, the Class C input can be varied from about 500 watts to a full kilowatt without noticeable distortion at 100 percent modulation. This is a variation in modulator load from 6250 to 12,500 ohms, representing considerable departure from the recommended value of 8300 ohms with 2500-volt plate supply. Distortion was checked in these tests by applying sine-wave audio input to the speech amplifier and observing the modulation envelope on an oscilloscope. Some increase in grid bias, with resultant reduction in standing plate current, is also permissible under certain conditions. Distortion begins to show up at high modulation percentages if this is carried too far, however. This is particularly true with full-kilowatt input to the Class C stage, and it is recommended that the bias be adjusted so that the standing plate current has the value shown in the curves for the particular plate voltage used if an input in excess of 750 watts is to be modulated. If the Class C input is less than 750 watts, the standing plate current can be reduced by about one percent for each 10 watts below 750, or a total reduction of 25 percent for 500-watt Class C input.

A Practical Modulator Using 304TLs in Class AB_1

Figure 2 is a schematic diagram of a practical 304TL Class AB_1 modulator. The layout of the unit is obvious from the photographs. The modulation transformer is the familiar RCA 1-kw surplus job, but, of course, any modulation transformer capable of handling the required output and of providing an approximate impedance match can be used. Because of the weight of the unit, a heavy-duty chassis is recommended. The filament transformers are rated at 5 volts at 30 amperes, and are also surplus. They are used in series to provide 10 volts for series operation of the 304TL filaments.

The phone-c.w. switch is a high-voltage ceramic switch from a TU-10B tuning unit. The switch clearances should be increased somewhat by mounting both the fixed and movable contacts on ½-inch porcelain standoffs.

The input transformer, which is also the output transformer of the preceding 6SN7 speech amplifier, is mounted in the modulator unit rather than on the speech amplifier chassis. This is done

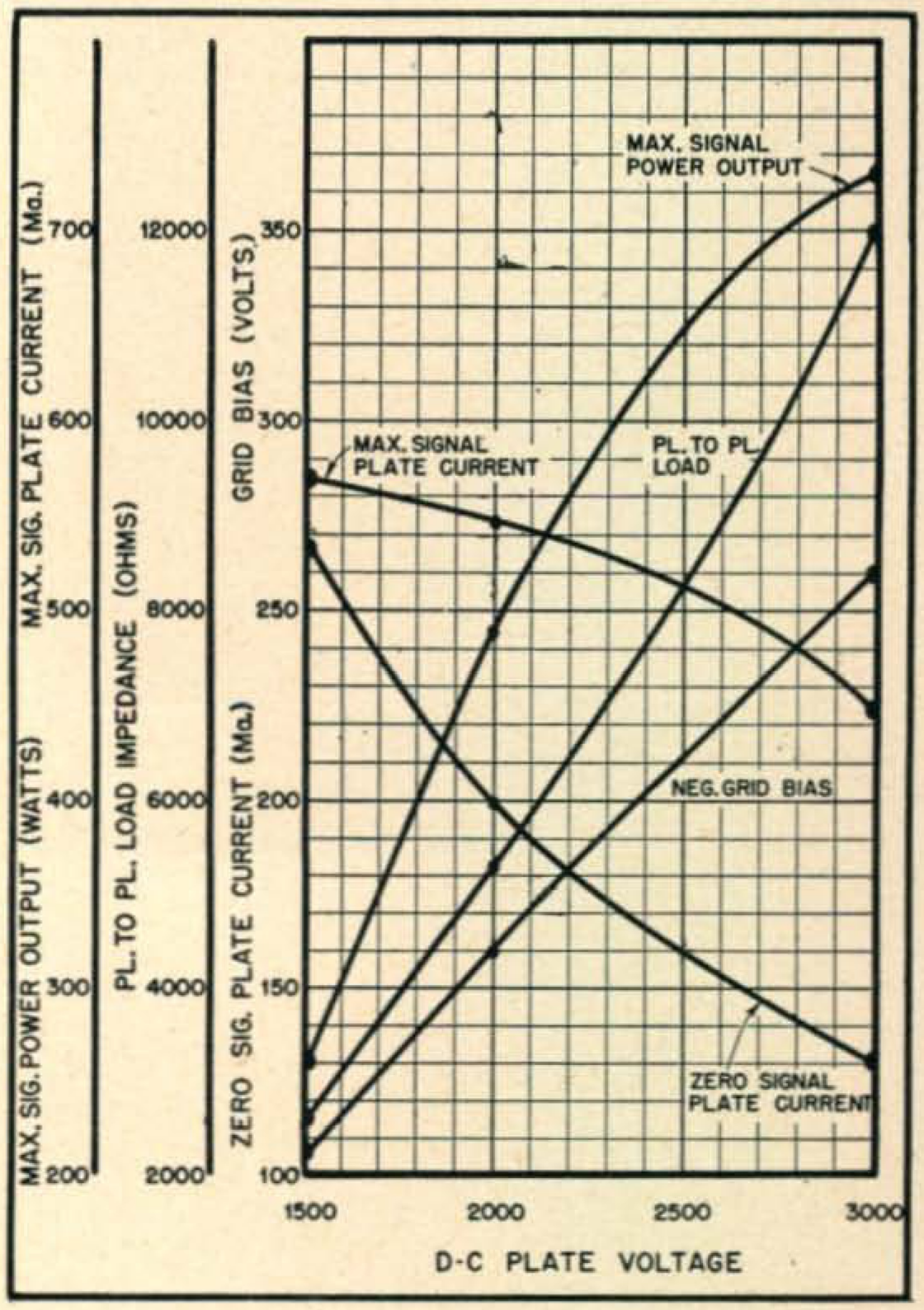

Fig. 1. Typical operating characteristics of 304TLs in Class AB_1. Values are for two tubes. Peak exciting voltage, grid to grid, is twice the operating bias shown.

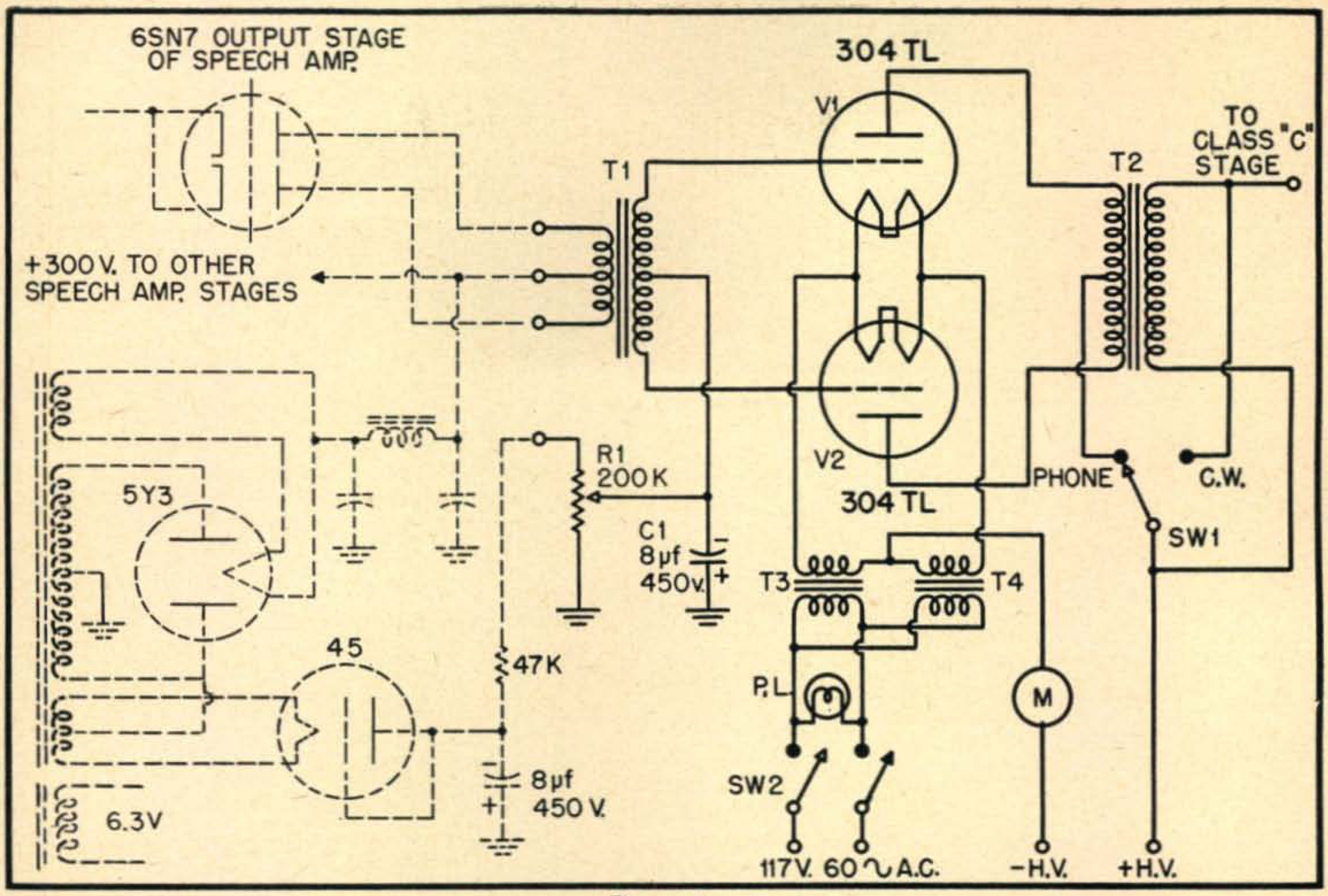

Figure 2

C1——8-mfd, 450 volts electrolytic.
R1——200,000-ohm carbon potentiometer.
T1——Interstage Audio Transformer, p.p. plates to p.p grids 1:3 ratio (Thordarson 20A23).
T2——Modulation transformer (RCA 1-kw surplus transformer or approximate equivalent. See text.).
T3, T4——Filament transformers, 5 volts, 25 amperes minimum current rating (Surplus, 5 volt 30 amp.).
SW1——High-voltage selector switch (from TU10-B tuning unit. See text.).
SW2——D.p.s.t. Toggle switch.
M——0-600 ma d.c. meter.
P.L.——115-volt pilot light.

to avoid having to run the high-impedance grid leads of the modulator all the way back to the speech amplifier. A shielded cable is used between the speech amplifier and the modulator. This cable should not be over 20 feet long, otherwise its capacitance will cause some loss of the high speech frequencies. A 4-conductor cable is used with the unit shown, one conductor carrying the 6SN7 plate voltage and one carrying the modulator bias voltage, in addition to the two 6SN7 plate leads. The cable shield is used as a common ground return. A 4-prong microphone connector is used to connect the speech amplifier and the modulator.

Bias voltage for the modulator is obtained as shown in the dotted portion of *Fig. 2*. The speech amplifier power transformer has a separate 2.5-volt filament winding which supplies filament current to a diode-connected type 45, which rectifies the voltage between one side of the high-voltage winding and ground. A simple R-C filter supplies bias voltage to the modulator, which contains additional filter capacitance across the bias-adjusting potentiometer. The maximum recommended grid-return resistance for 304TLs in Class AB_1 is 250,000 ohms, and a potentiometer no larger than the size shown should be used in order not to exceed this value. The bias adjustment is available from the front of the panel, and is provided with a shaft lock so that the setting cannot accidentally be disturbed.

Operation of the Modulator

The process of putting the modulator into operation is quite simple. Before applying plate voltage, check the bias voltage directly between each 304TL grid and ground with the bias potentiometer set for maximum. Having ascertained that adequate bias voltage is available for the plate voltage to be used, set the phone-c.w. switch to the c.w. position, fire up the transmitter, and adjust the Class C amplifier loading to the desired value. Place the phone-c.w. switch in the phone position and carefully set the bias adjustment so that the modulator draws the proper static plate current for the voltage obtained under operating conditions. Both modulator tubes will show approximately the same color if they are well matched. Since there is considerable variation among some 304TLs, it is well to have a spare on hand that can be substituted if necessary for a better match between tubes.

MOBILE MODULATOR

GENERAL CONSIDERATIONS

Mention was made, in the E-P Rig description, that both the r-f and audio system would operate from a single 300 volt 100 ma vibrator power supply. Inasmuch as the E-P Rig B plus current drain totaled approximately 60 ma, the *average* current available for the modulator design is 40 ma.

In typical amateur practice, where push-pull class AB6V6 tubes are used as modulators, this figure of 40 ma would barely provide *static* current for *one* of the modulator tubes. Also, considering, normal output transformer efficiencies, this 6V6 type of setup would be hard pressed to provide 10 watts of audio *output*.

Other experimenters, striving for a low-drain modulator design, have gone to Class B modulators, realizing that this type of operation gives the lowest static current possible. (For a given peak audio power output the peak d-c plate current to the modulator stage is relatively fixed, regardless of the type of operation. However, when considering speech waveforms, this peak value of plate current is of secondary importance; the average value of d-c plate current is relatively low compared to the peak value.)

For example, the 6N7 in class B service is rated at about ten watts output, and the average plate current required is in the order of 35 to 40 ma. The driver required for this 6N7 would usually consume another 10 or 15 ma. This arrangement is a considerable improvement over the class AB6V6 approach, but falls seriously short of our 40 ma average current objective.

The problem was, therefore, to achieve further economy in both the modulator stage and the driver. The ideal class B tube for this service was found where it was least likely to be suspected—in the miniature tube line.

Strange as it seems, the 12AU7 will give a peak speech output of well over ten watts and, stranger still, at a distortion level well under that accomplished by a class-B operated 6N7, despite the fact that the 6N7 was originally designed for zero-bias class-B operation.

The static (resting) current of the 12AU7 in class B with 300 volts on the plate is approximately 15 ma!

Further economies in both current and weight can be realized in the driver stage by employing a device already well-known to readers of the *Ham News*. By using a cathode-coupled driver (see *Ham News* Vol. 4, No. 5) operated class B no driver transformer is required and the driver itself adds only another 5 ma drain to the power supply.

The net effect of this design is a high-quality modulator (including a voltage amplifier stage drawing less than a ma) that has a static drain of approximately 20 ma.

ELECTRICAL DETAILS

With reference to the circuit diagram, Fig. 2, it will be noted that the entire modulator is push-pull throughout. Inasmuch as the class B stage and driver must be push-pull, it was deemed desirable to carry this through to the input circuit in the same fashion, to avoid a phase inverter and to simplify construction. Note that only three condensers and eight resistors are used in the entire unit.

A bias battery is specified in order to provide the proper grid bias voltage for the 12AU7 modulator and the 12AT7 driver. Under zero-signal conditions the bias voltage from either pin 2 or 7 of the 12AU7 to ground will be 15 volts, and the voltage measured across either R_7 or R_8 (the bias for the 12AT7 driver) will be 7 to 8 volts, when a 22.5 volt bias battery is used.

ELECTRICAL CIRCUIT

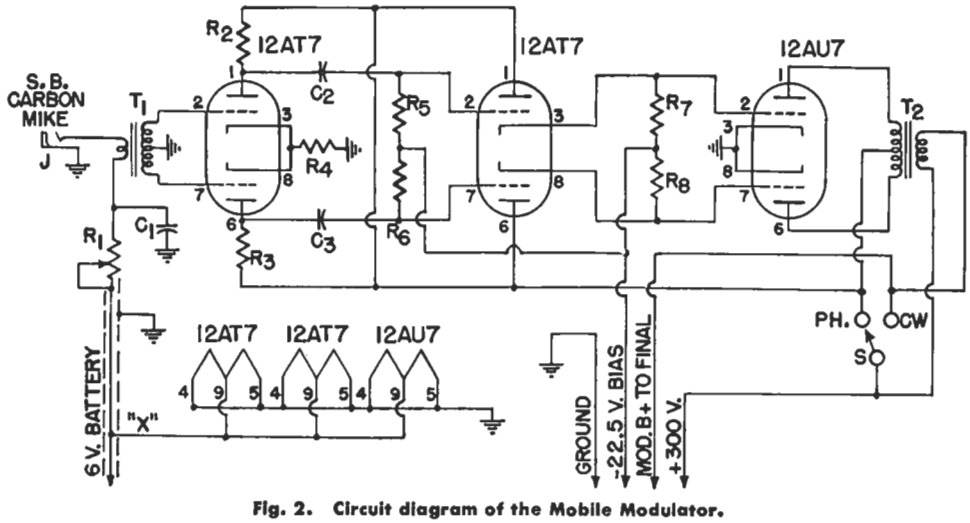

Fig. 2. Circuit diagram of the Mobile Modulator.

CIRCUIT CONSTANTS

(All resistors and capacitors ±20% tolerance unless specified otherwise)

C_1 . . . . . 500 mf 15 volt electrolytic
C_2, C_3 . . . . . 1000 mmf 500 volt ceramic or mica
J . . . . . Open-circuit jack
R_1 . . . . . 250 ohm potentiometer
R_2, R_3 . . . . . 0.1 megohm, ½ watt
R_4 . . . . . 2200 ohm, ½ watt
R_5, R_6 . . . . . 0.47 megohm, ½ watt
R_7, R_8 . . . . . 10,000 ohm, ½ watt
S . . . . . SPDT toggle switch
T_1 . . . . . S.B. mike to push-pull grids
T_2 . . . . . Output transformer (see text)

Note that the cathode current for the 12AT7 driver flows through the bias battery, and therefore this battery actually supplies a current in the order of a few milliamperes. In other words, the current does not tend to charge the battery, as in the usual bias case, but instead, tends to discharge it. However, this current is so slight that normal shelf life may be expected from the battery. This battery has no drain on it during stand-by or complete off periods, as current is drawn from it only when high voltage is applied to the modulator.

The first 12AT7 tube acts as a push-pull voltage amplifier. Because carbon microphones have a wide variation in output voltage, this first stage was added so that adequate gain would be available regardless of the microphone used.

Voltage for the microphone is obtained from the car battery, and a single shielded lead is used to provide filament voltage and microphone voltage. This lead should be made of heavy wire to avoid ohmic loss due to the filament current, and it should be shielded to prevent undue noise pickup.

Potentiometer R_1 (actually connected as a rheostat) serves as a gain control. Because it can only change the microphone current a small amount, it does not have a wide range of control, but it is useful for adjusting the level when different people use the microphone.

If the microphone has too much gain, it will be necessary to increase the value of R_1, or add a fixed resistance in series.

A phone-cw switch is provided which removes all high voltage from the modulator and shorts the secondary of the output transformer when the switch is in the c-w position.

An external switch must be provided to turn the filament circuit on and off. With the circuit shown this switch will also shut off the mike current. Some microphones incorporate switch contacts which may be used to control a relay for power switching. There are many possible control schemes and the refinements of the control system are left to the individual.

CONSTRUCTIONAL DETAILS

The general nature of the mechanical work is shown in Figs. 3, 4, and 5. All of the parts, with the exception of the switch, are mounted on a piece of flat metal measuring 4⅛ by 5⅛ inches. The spacers which support this piece are 1¼ inches long.

Fig. 5 indicates how the parts are mounted on the flat chassis and Fig. 3 shows the wiring on the underside of the chassis.

The shaft on resistor R_1 is left long enough so that it projects through the front panel. The input jack is mounted on the chassis and a large hole cut in the front panel so that a mike plug can pass through. The switch is mounted on the front panel and the leads going to it are left a little long, as shown in Fig. 3, so that the chassis can be removed easily from the front panel.

The front panel is one of the removable 5 by 6 inch sides of a standard 4 by 5 by 6 inch cabinet. This is the same size cabinet used with the E-P Rig described in the March-April 1950 *Ham News*.

Referring to Fig. 3, the input 12AT7 is the bottom tube, the 12AT7 driver is the middle tube, and the top tube is the 12AU7 output tube. These same tubes can be seen in Fig. 5, and the order of the tubes is the same, looking from right to left. Note that the input 12AT7 uses a shield. Also in Fig. 5 transformer T_1 is on the right and transformer T_2 is on the left.

COMPONENTS PARTS

There are no critical components used in the mobile modulator and all parts may be plus or minus 20%, as indicated under circuit constants.

One part is worth discussing in more detail, however, and that is the output (modulation) transformer. Fundamentally, all that is required is a transformer with a primary plate to plate impedance of approximately 12,000 ohms and a secondary impedance of approximately 6000 ohms. This latter figure assumes that the modulator will be used with the E-P Rig, where the plate voltage on the final is 300 volts and the final plate current is about 50 ma.

The prime considerations in choosing an output transformer for the Mobile Modulator are size, weight, efficiency and cost. A designer's concern over size, weight and cost is obvious, although concern over efficiency might not be.

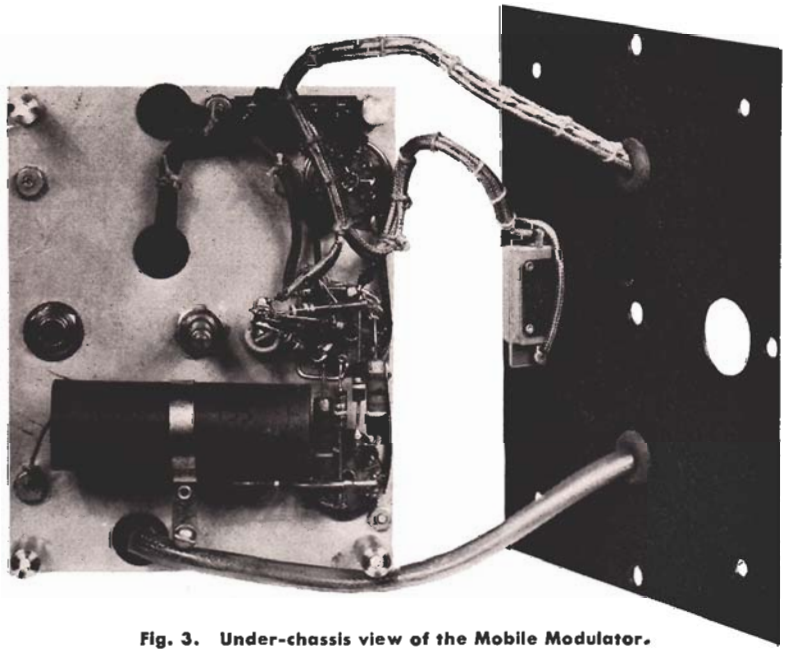

Fig. 3. Under-chassis view of the Mobile Modulator.

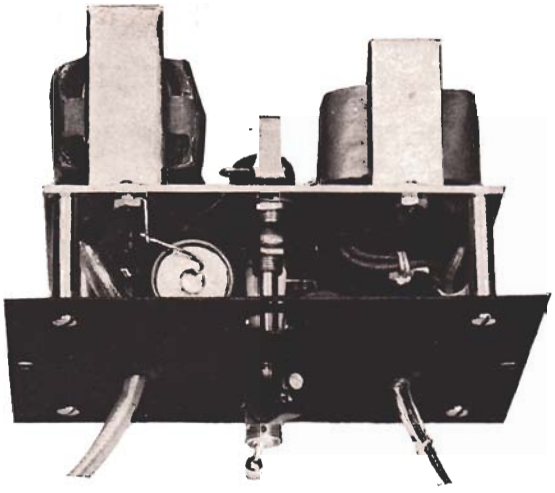

Fig. 4. Top view of the uncased Mobile Modulator.

If a transformer has a loss of 3 db (and this is not unusual) then one-half of the audio power is lost in the transformer. In other words, if 12 watts could be gotten out of the tubes in a modulator stage, then only six watts would be available out of the transformer. This means you have only a six, not a twelve watt modulator.

In class B systems another important but frequently overlooked consideration is that of the design of the transformer itself. An improperly designed transformer can contribute a large amount of distortion to the output signal. While the efficiency depends upon the primary to secondary coupling, the distortion is controlled largely by the tightness of the coupling between the two halves of the primary winding.

Obviously, any transformer of the proper impedance and power rating will serve, within the limitations mentioned, as T_2. Among the possible choices are Stancor A-3891, Thordarson T-21M52 and UTC S-18. (The transformer pictured is one which happened to be handy.) Some mechanical rearrangement may have to be made, depending on the size of the transformer selected.

TESTING

There is very little that need be done when the unit is finished. As mentioned previously, it would be wise to check the bias values, and a meter reading of the resting current would also be advisable.

Do not attempt to test the modulator with signal input unless it is connected to the final, or unless a dummy load is used. A 5000 ohm, 10 watt resistor across the secondary of the output transformer will serve as a dummy load.

OTHER USES

Even though the Mobile Modulator has been designed for mobile service primarily, it will make an ideal modulator for emergency work. The power drain is small and the unit is compact and reliable.

This modulator may also be used in the home station if a change is made. Wire "X" should be disconnected from the hot lead so that the filaments may be energized by a 6.3 volt transformer. The hot lead can then go to a small 4.5 or 6 volt battery which will supply mike current.

Regardless of the use for which it is built, this high quality little modulator should find many uses around the shack.

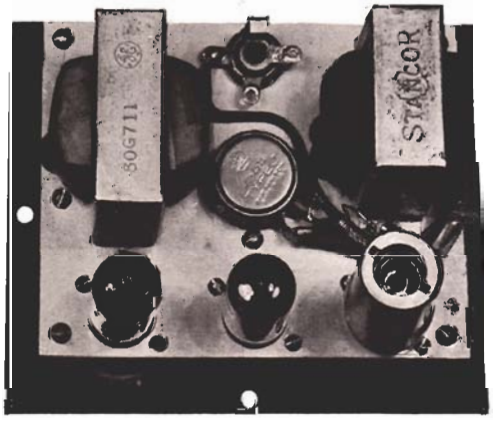

Fig. 5. Rear view of the uncased Mobile Modulator.

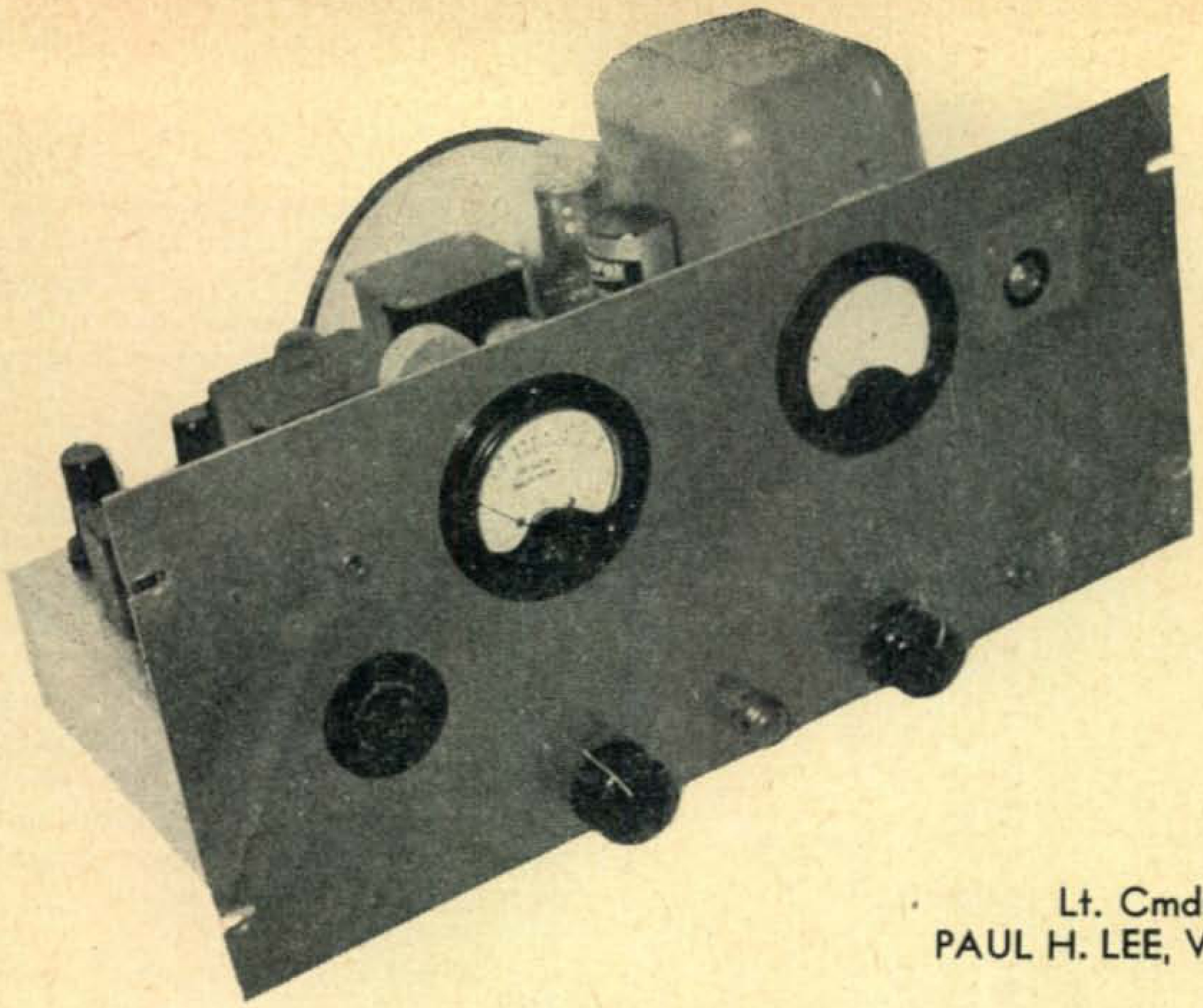

Lt. Cmdr.
PAUL H. LEE, W4RXO*

More Modulation $ per Dollar $

Generally when someone starts talking about putting more wallop into their modulation the conversation drifts to speech clippers and other murderers of a good waveform. Actually there are a number of different methods that effectively accomplish the same purpose. At least one of them, the "limiter or compression" amplifier, has a natural sounding output. For a "signal of distinction", try this in your modulator. —Editor.

Some time ago we decided to build a limiting audio amplifier for use with our 800 watt phone transmitter. The advantages in the use of this piece of gear are such that we feel than many of our brother amateurs will be interested in it. Limiters have been used by broadcasters for quite a few years, but for those who may not be familiar with broadcast station practice, let us define a "limiting amplifier", or "compressor". It is nothing more nor less than an audio amplifier with an a.v.c. circuit built in, to limit the peak audio output to some predetermined level.

Figure 1 shows the limiting effect which is performed by the amplifier described herein. A glance at the curve will show that after the start of limiting action at the knee of the curve, a 20 db increase in input produces only a 12 db increase in output, a 30 db increase in input produces only 16 db increased output, and so on. It is obvious then, that one of these limiters, used ahead of a properly designed modulator in a phone transmitter, will produce a signal with a higher average value of modulation, without danger of overmodulation.

At this point, someone is sure to raise his voice and say, "Why, I can do that with a peak clipper!" Well, sure you can! You can take a perfect audio waveform, and chop off the peaks, and you will have a high average value of modulation, without overmodulation. But look a little further and see what else you have done by this chopping process. You

* *4 Oak Street, Isle of Palms, S.C.*

have ruined the original waveform, and have brought that ugly word "distortion" into the picture. Chopping off the peaks creates various high-order audio harmonics and undesired frequencies, which cause the signal to be broad. One must then go to the trouble of including a low-pass filter in the output circuit of the modulator, to remove these undesirable components from the signal. Such a filter involves high voltage components, which add cost to the transmitter. Furthermore, the modulator may easily be overdriven, causing further spurious signal generation. The intelligibility of the voice signal suffers, because of the distortion of the waveform, and if the thing is carried to the extreme, the speaker's voice becomes unrecognizable and unintelligible.

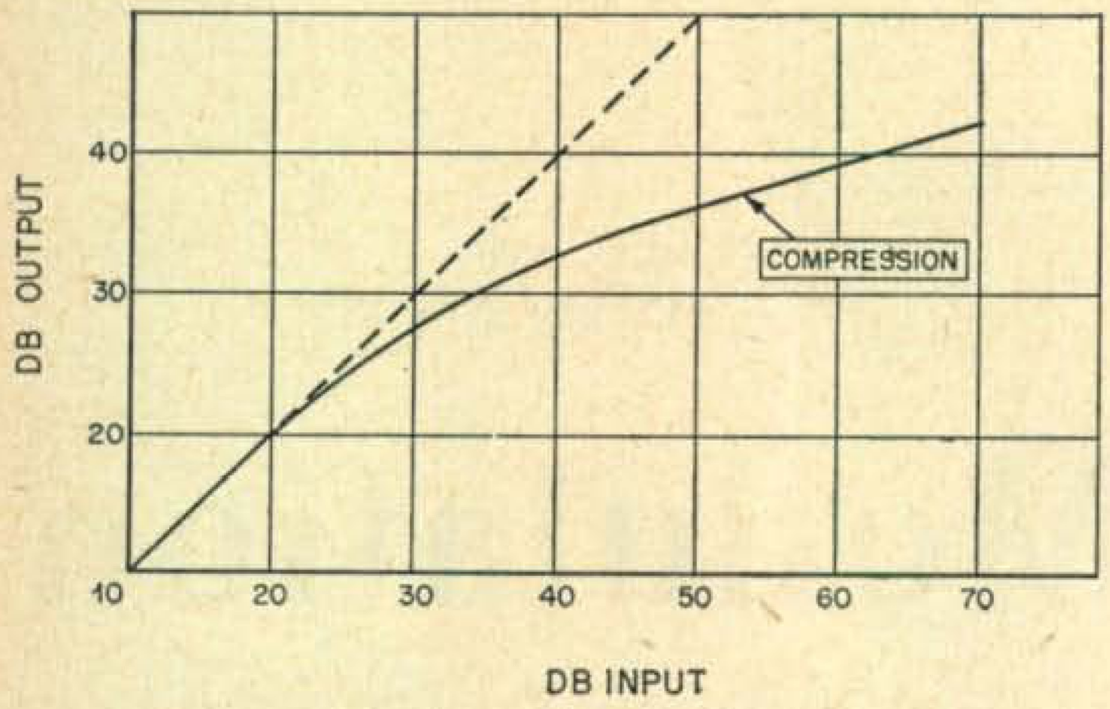

Fig. 1. This graph shows the limiting or compression effect of the audio system described by the author. When used on the air it results in a higher average value of modulation without overmodulation, or destruction of voice quality.

The author is one of those people who believe that once a good audio signal is created, at the microphone, it should not be distorted or destroyed. The phone signal on the air should be *clean,* and by "clean" we mean not only free from spurious r.f. emissions, but also from audio distortion. The signal on the air should *sound like the speaker's natural voice,* and have "personality" and "presence". There are some signals on the air in our phone bands which sound rough, distorted, and overdriven. Roughness caused by distortion due to clipping or overdriving does not increase intelligibility thru QRM—on the contrary, such a signal is harder to read under poor conditions. The clean, undistorted signal will always get through better. This fact is well recognized by commercial and military communications people, who make good use of such limiters as this on voice circuits to insure a high average level of modulation without over-modulation.

Now let's stop the preaching, and get down to business. Here we have a limiting amplifier, which when used ahead of your modulator, will enable you to raise your average audio voice level 8 to 10 db without over-modulation. It has a reasonably good frequency response, and very low distortion, even under severe compression conditions. The frequency response, and distortion-versus-frequency curves, made with *General Radio* audio measuring equipment, are shown in *Figures 2 and 3.* Take a look at these curves and see how *clean* an audio signal this gadget puts out, yet how packed with audio wallop it is. For anyone who desires to roll off the high frequency response a bit more, it is easily done by the use of fixed condensers from grids to ground on the 6N7 stage, or by the use of a large plate bypass condenser in the final r.f. amplifier.

The Design

The unit shown in the photographs is built to mount in a standard 19" rack, with an 8¾" panel, and on a 17" x 10" x 3" aluminum chassis. The circuit, shown in *Fig. 4,* is simple enough. It consists of a pre-amplifier stage permitting the use of crystal, or high or low impedance dynamic microphones. Anyone who is interested only in a high impedance input may omit the input transformer. The triode-connected 6AC7 gives a bit more gain than a triode-connected 6SJ7—either one will be satisfactory. The 6SK7's operate as a variable-gain stage, with their bias controlled by the a.v.c. voltage from the rectifier section of the 6SQ7. The 6SQ7 derives its excitation from the 6N7 grid circuit, with the threshold of compression being determined by the setting of the 1-megohm potentiometer in the 6SQ7 grid circuit.

The output level of the amplifier is determined by the setting of the dual potentiometer in the 6N7

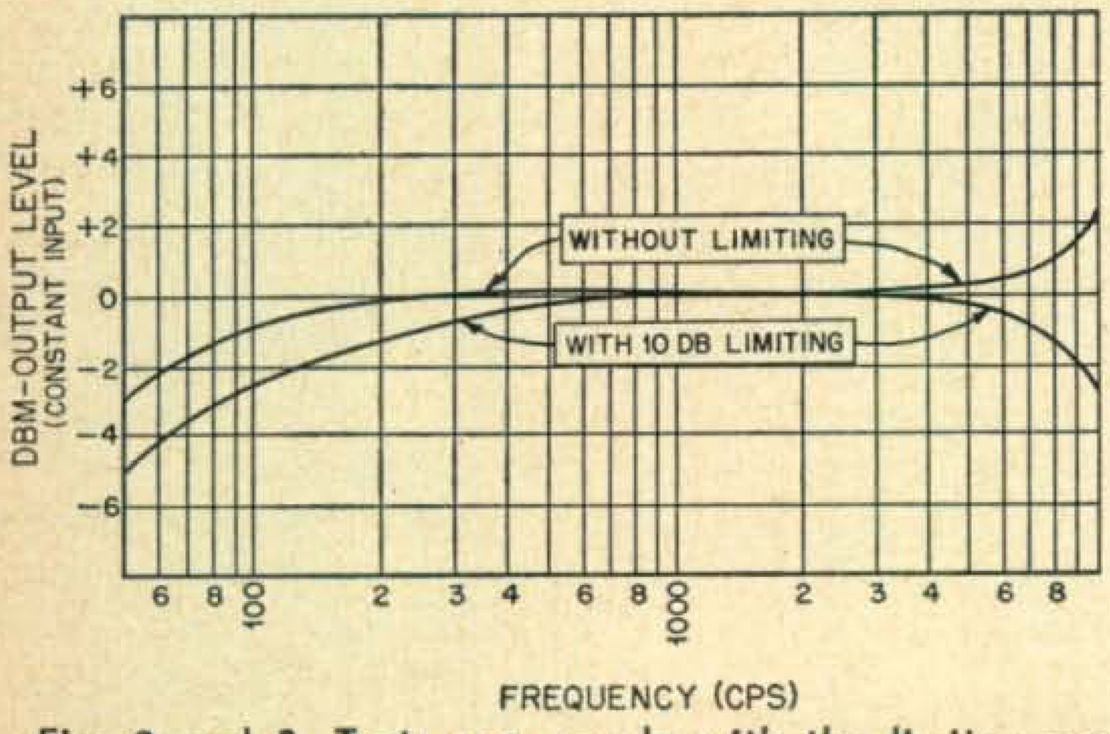

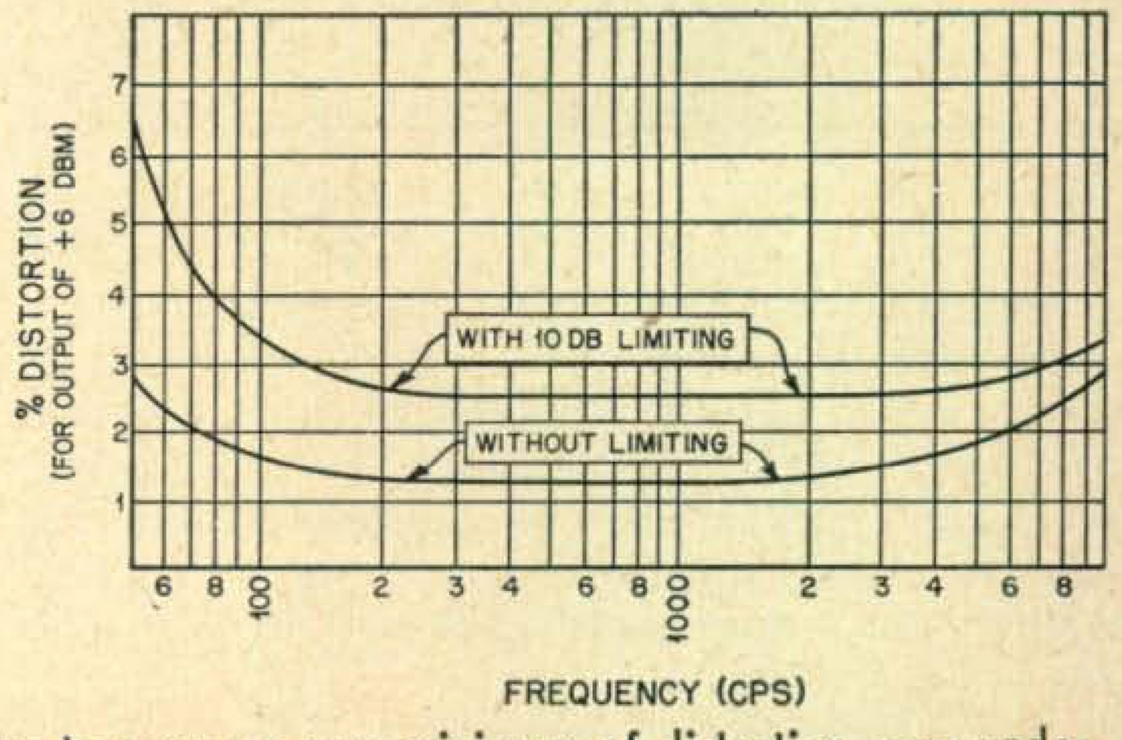

Fig. 2 and 3. Tests were made with the limiter amplifier to ensure a very minimum of distortion even under severe compression. The frequency response, with and without compression, is shown graphically at the left. See text for comments on the high frequency "roll-off." At the right is the graph of distortion versus frequency. Over most of the speech range the distortion increase with 10 db compression is only slightly over 1%.

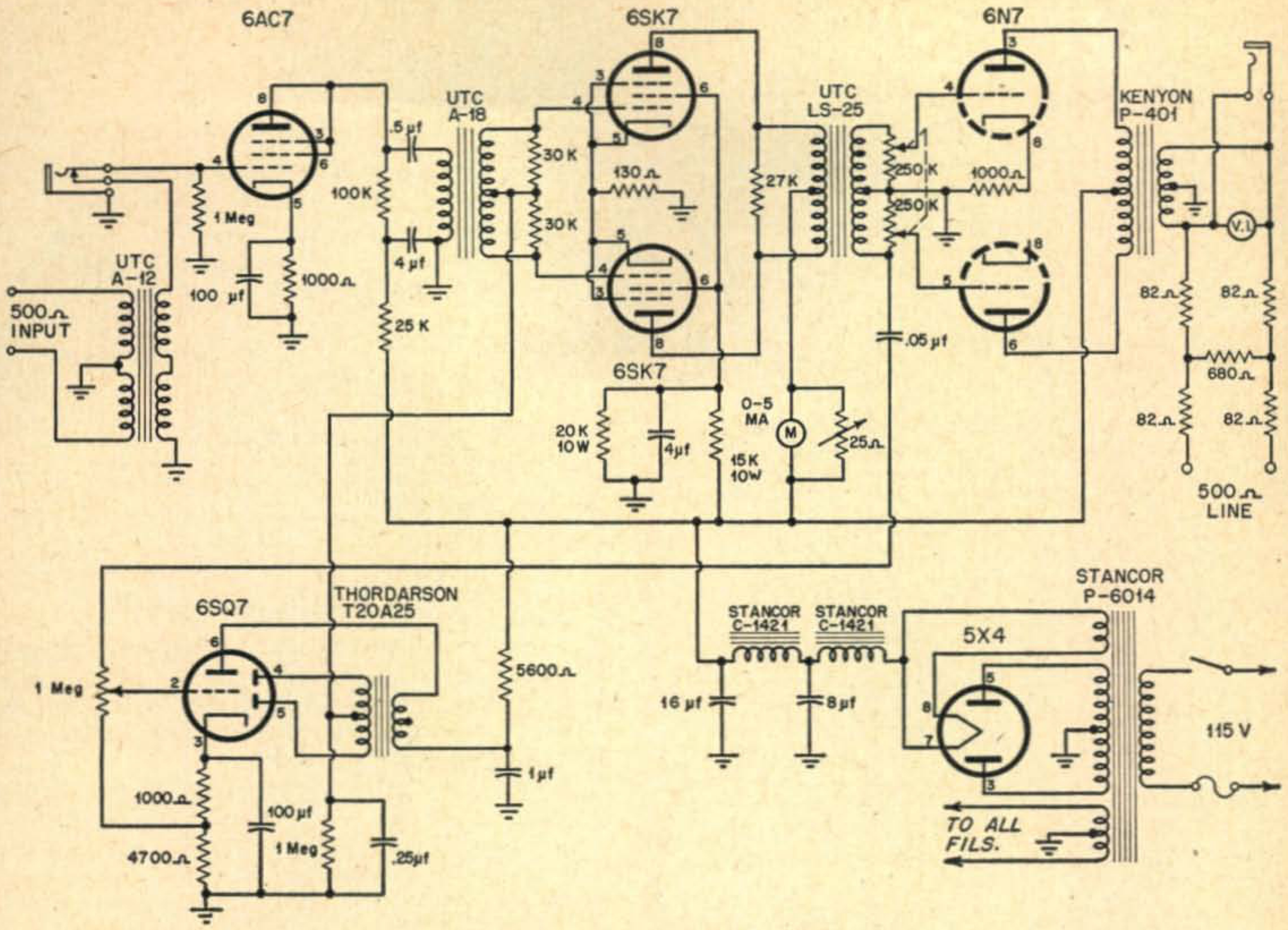

Fig. 4. Schematic of the limiter amplifier. All parts values are shown in the diagram.

stage. The 6N7 is operated "Class A". The use of a volume indicator meter on the output is recommended, so that you can actually see the effects of compression on the average output level. A 6 db pad is inserted in the output circuit to give the output stage a resistive load to work into. If this is not done, the volume indicator will read incorrectly and will appear to "float" at certain audio frequencies.

You may wonder why we use two 6SK7's in push-pull. The answer is very simple. The use of push-pull permits us to do without the usual filters which are necessary in an a.v.c. circuit to prevent unwanted feedback and oscillation. Elimination of the filters enables us to accurately control the gain recovery time by means of the time-constant circuit described below. If we had to use a filter in the a.v.c. voltage circuit, our recovery time duration would be determined by the minimum amount of filter which we could get away with, and this is one disadvantage of limiters which use a single variable-gain tube whose gain is controlled by a dual-diode rectifier fed from the amplifier output.

The plate current meter in the 6SK7 stage, corresponding to your receiver "S" meter, actually shows the amount of compression. As compression occurs, the plate current drops from its full-scale steady state. The scale of the meter may be calibrated directly in "db compression". A full-size sample scale is shown in *Fig. 5.*

The "attack time" of the limiter circuit is on the order of .001 seconds for full gain reduction. The "recovery time", required for the unit to return to 90% of full gain, is determined by the time constant of the parallel resistor and condenser in the ground return of the 6SQ7 rectifier circuit.*

Experience has shown a 1-megohm resistor shunted by a 0.25 µf condenser to be well-suited for voice operation. The recovery time is sufficiently long to prevent the amplifier gain from varying at the syllabic rate of normal speech, and yet it is short enough to prevent loss of low level passages due to a prolonged reduction of gain. In operation at W4RXO, the "gain reduction" meter hovers around 6 db during normal speech, and the output level is set to give 95% modulation with about 10 db limiting. This may sound excessive to the broadcast boys, but remember that in amateur work we are dealing only with voice transmission and not with high quality program material.

Construction

Two-watt fixed resistors are used throughout, except for the 15,000 and 20,000 ohm resistors in the voltage divider circuit for the 6SK7 screens, which are 10-watt wire wound resistors. Note the use of good quality transformers. This contributes

(Continued on page 62)

***If you would like to experiment with the "recovery time," the following table will be of interest.**

R	R x C	90% gain recovery
10 megs	2.5	5.2 seconds
5 "	1.25	2.6 "
2.5 "	.625	1.3 "
1.25 "	.313	.65 "
.5 "	.125	.26 "

MODULATION

(from page 21)

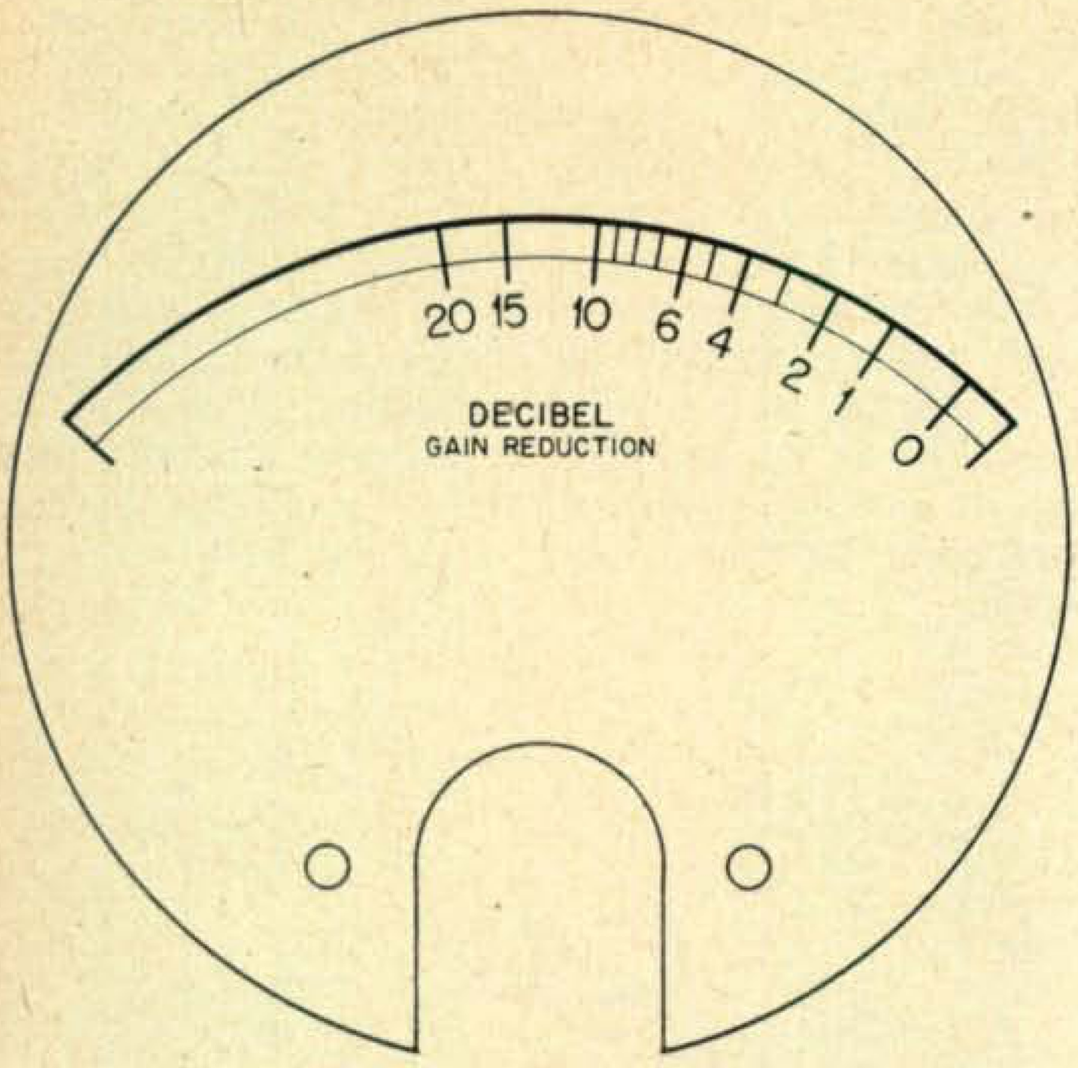

Fig. 5. This is a full size scale calibrated directly in db compression.

further towards the low distortion and good frequency response of the unit. The load resistors on the grid and plate circuits of the 6SK7's are necessary to prevent a sharp peak in response from occurring at about 4500 cycles, and to flatten out the overall response curve. The transmitter used in connection with the 6SQ7 is a 1:1.41 push-pull interstage transformer.

The unit should be built in accordance with good audio construction practice. Filament leads should be isolated and twisted, to minimize hum radiation. The physical layout should permit short grid and plate leads, and short ground returns direct to the metal chassis on all bypass condensers. The leads associateed with the input transformer and 6AC7 grid circuit should be shielded, to prevent hum and r.f. pickup in the input circuit. It is also well to shield the leads to the 0.25 megohm dual potentiometer, as the physical layout may not permit these to be short. The power transformer should be located in a corner of the chassis as far away from the input circuit as possible, to minimize hum pickup. After the unit is completed and tested, a bottom cover should be installed on the bottom of the chassis, to shield all components from possible r.f. pickup.

Here at W4RXO, we use this unit to drive a single 6V6, which in turn drives push-pull 813's in our 500 watt modulator. The limiter amplifier has more than enough gain, when operated from a dynamic or ribbon microphone, and we run with the gain control about 60% open. The unit may be heard on the low end of the 20 meter phone band, by anyone who is interested in hearing it before building it, but we guarantee that if you built it, you'll be more than pleased with the results, and justly proud of the "punch" and quality of your phone signal.

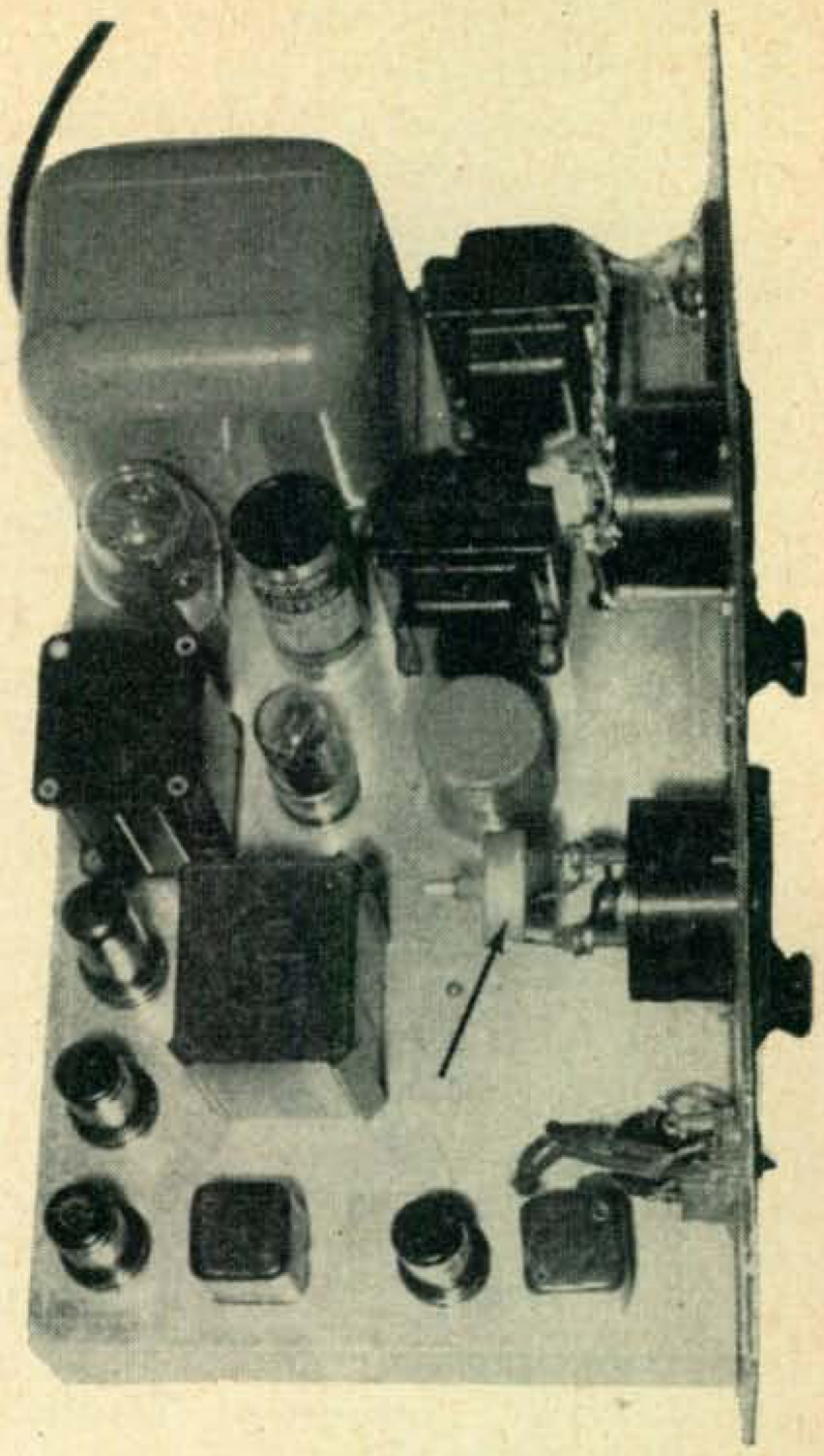

Above the deck the limiter amplifier is straightforward in layout. The arrow indicates the 25 ohm potentiometer across the "gain reduction" meter.

TELETYPE

(from page 32)

which has now weathered a year of life in this cruel world. Let me tell you just a bit about it.

Last July I decided that it was way past time for someone to take on his shoulders the task of setting up a communications link between the various interested teletypers, so I sent out a two page mimeo paper to the sixty or so amateurs that I knew were active to some degree. John (W2BFD) sent me a list of over 400 amateurs that had either written him for information or had purchased printers. I had figured that the maximum call I would have for a bulletin would probably be about a hundred so I tried to weed down the list by sending them all a copy of bulletin #2 and making them write in order to get more. They did and I had to send out over 200 of the next issue. By October it was 250 and the bulletin was seven pages long. Whew, what a folding and addressing job that was, it took an entire week-end. The start of this column in CQ and the interest spawned by the FCC proposed regulations has brought the demand to well over 500 a month.

The above paragraph is for historical purposes only so please don't write for copies of the monthly bulletin for they are dull, boring, and filled with exceedingly complex technical discussions. You wouldn't like my style of writing anyway.



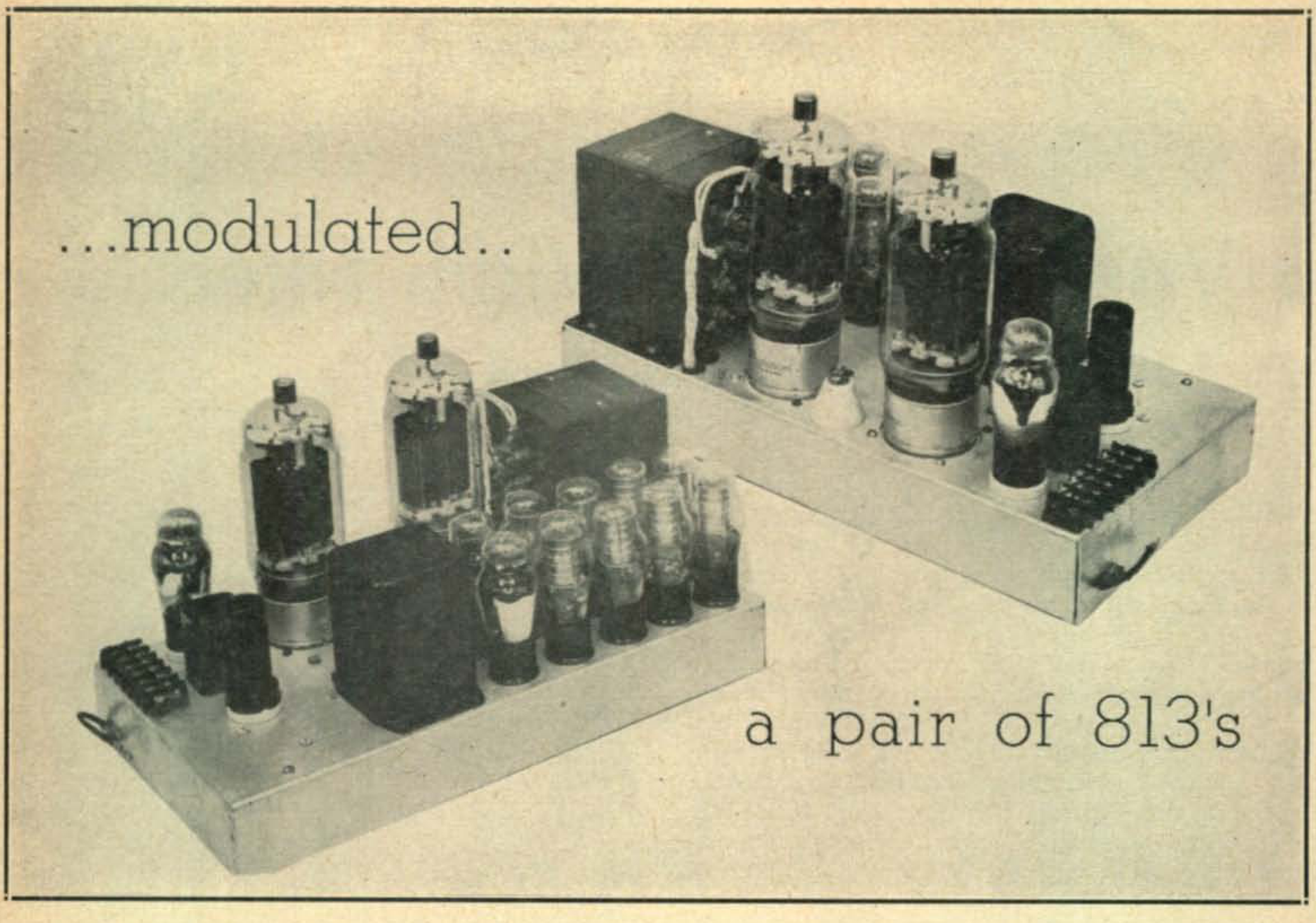

Paul H. Lee, W2EWP/YV
Asst. Ch. Engr., Intelec S. A.
Caracas, Venezuela

This unit was built to fit an available space in the cabinet rack which houses our 800-watt transmitter. The modulation transformer is a surplus *RCA Type 900777*, from a 500-watt (output) broadcast transmitter. It is designed for a 15,000-ohm plate-to-plate modulator tube impedance, and a 5000-ohm power amplifier load.* Because of its size and weight, it is not mounted on the modulator chassis, but rests on the bottom of our cabinet rack and this modulator unit fits in the space beside it.

The unit is built on a sheet aluminum chassis, 8″ x 15″ x 2″ in size. Inspection of the photographs will show the physical arrangement of parts. The layout is neat, and leads are kept as short as possible. Grounds are short and direct to the chassis. The unit contains a minimum of parts, and can easily be assembled and wired in one evening.

The individual cathode current meters are mounted on the front panel of the transmitter, at eye-level height, and are not shown in the photographs.

Design

813's were the logical choice for modulator tubes, because of their high power output, extremely low driving power, and low cost. Their one disadvantage, to us at least, was the requirement for a well-regulated 750-volt screen supply. In our existing transmitter, the exciter stages were powered by a 400-volt supply. We finally solved the screen voltage problem by use of a dropping resistor of the same size as is usually employed when 813's are used in an r-f power amplifier, together with a bank of voltage regulator tubes. The screen current of a pair of 813's operated under class AB2 conditions varies from about 5 to 60 ma., with application of audio grid voltage. Therefore it was necessary to use ten VR-150's in a series-parallel arrangement, inasmuch as a single string of them in series would handle only about 35 ma. current variation.

The use of the ten VR-150's results in a very stable screen voltage and is much cheaper than a separate 750-volt supply. Even if you build this unit and have a 750-volt supply available, we recommend that said supply have good regulation, so that you can realize the full undistorted power output of the 813's. This applies not only to 813's but also to any other beam pentodes used in audio work.

* The following transformers are available and may be substituted:

Chicago Transformer #CMS-3
Thordarson #T21M65
U.T.C. #CVM-5
S.N.C. #5P363 or 5P364
Kenyon #T-442

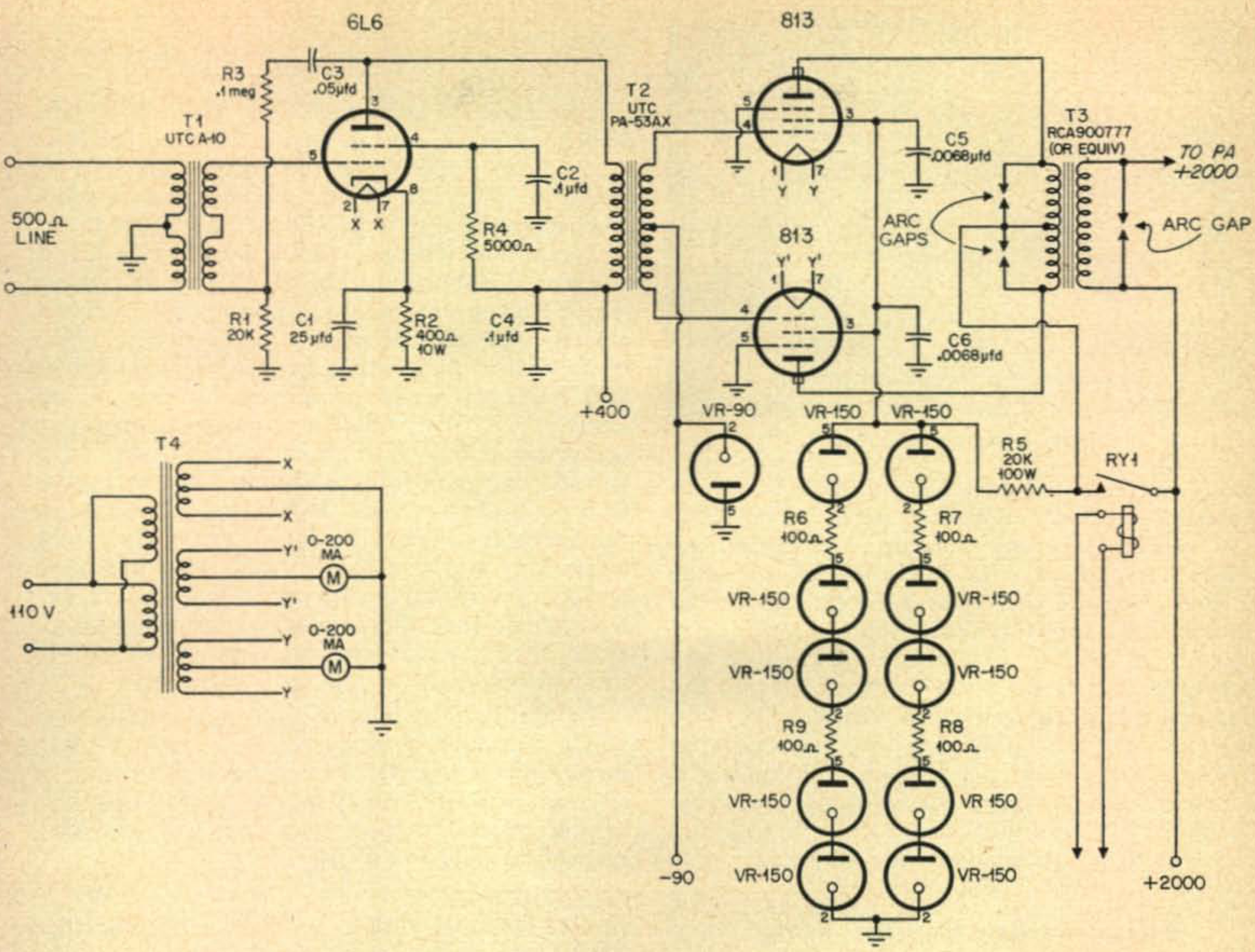

Schematic of 500 Watt Modulator.

We also recommend the use of the VR-90 to hold the bias voltage at 90 volts. Even though the driving power required by the 813's is very low, *some* power is required when operating under class AB2 conditions, and this results in a slight grid current flow on peaks. Grid current flow invariably results in a change in bias voltage, unless the bias supply is regulated. A change in bias voltage means that you will have some peak distortion. A VR-90 costs very little, and it requires no filament power, so let's not "cut corners" by saying that we don't need it because it's only voice operation—let's put it in and make the unit a *good* one.

6L6 Stage

The use of a 6L6 in the input stage may be questioned. Let us state here, for the record, that a 6F6 or 6V6, with lower plate voltage, will provide ample drive for the 813's. We happened to have plenty of 6L6's on hand, so we used one. It does *not* overdrive the 813's; first, because we have included a large amount of negative feedback to reduce distortion, improve frequency response, and to hold the load impedance of the 6L6 fairly constant with changes in load due to grid current peaks in the driven stage, and second, because we use a limiter or compressor amplifier ahead of this unit, to prevent over-driving. The interstage transformer should be one with a low resistance secondary winding.

Control Relays

Relay *Ry1* is a *Leach Type 1601-MX* high voltage relay, with a 115-volt coil connected in series with the contacts of an underload relay in the cathode return of the class C stage. This system protects the modulation transformer and tubes from damage by removing modulator plate and screen voltage whenever the power amplifier cathode current falls below 300 ma. The relay is actually mounted on the modulation transformer itself, at the primary center-tap. It could be mounted on this chassis, however, next to the 6L6, using properly insulated mountings. The modulation transformer also has arcing gaps installed across both primary and secondary windings for overload protection.

Construction

The dual-winding, 10-volt filament transformer is mounted at one corner of the chassis, with the 6.3-volt transformer mounted below it on the underside of the chassis. The voltage regulator tubes are mounted as close together as possible, in a group, on the same end of the chassis. The 813 sockets are mounted flush,

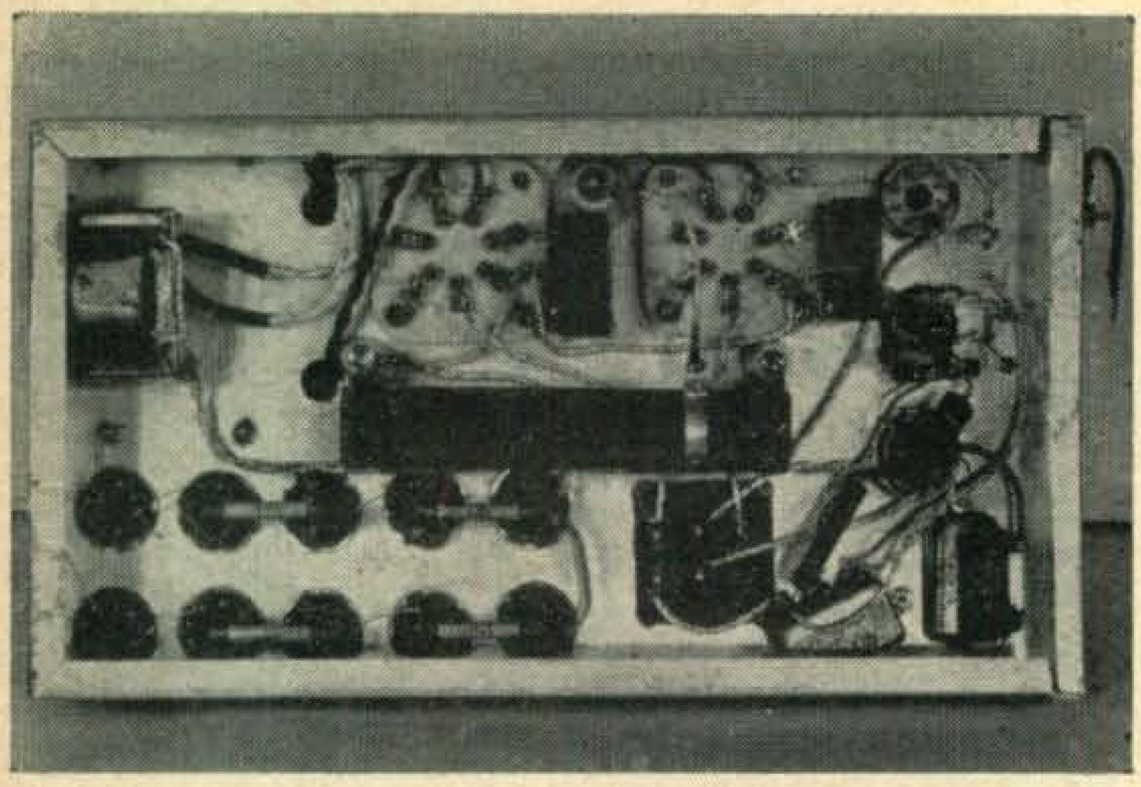

Bottom View of Modulator.

under the chassis, with the positive 2000-volt terminal insulator between them. The 100-watt screen dropping resistor is mounted securely on small ceramic pillar insulators, so as to clear both the chassis *and* the bottom of the cabinet rack on which the chassis rests. The input transformer, *T1*, is located close to the 6L6 tube, and as far away as possible from the filament transformer(s) and wiring. The wire shown in the photographs, which is fastened to the outside of the chassis near the terminal strip, is a direct ground from chassis to cabinet rack. The 813 plate terminals connect to the modulation transformer with short flexible leads.

Operation

There are no tricks in this circuit. It is very straightforward, and easy to build and operate. Any good modulation transformer capable of handling 500 watts of audio power can be used. You may drive it with almost any speech amplifier which will provide a level of 0 DBM across a 500-ohm output. Or, if you like, use a single button carbon microphone and incorporate a gain control in the input circuit. This unit, with a plate voltage of 2000, will deliver 450 watts of audio power to the modulation transformer, with measured peak distortion in the order of 6%, and allowing for losses in the transformer, will fully modulate 800 watts input to a class C r.f. stage. Individual cathode currents average about 130 ma. per tube for voice operation, and rise to 190 ma. per tube upon application of audio tone for 100% modulation. Remember that these meters read the sum of plate, screen, and grid currents. They are in the cathode leads to reduce HV hazards.

In closing, we believe that this unit is well worth building if you are interested in high-power operation. However, remember that it *is* "high-power," and it should not be operated in the open, without shielding and interlock protection. *SAFETY* first!

Variable Bandwidth Filter

[*from page 39*]

factory performance as fixed-width selectivity devices will give equally satisfactory results in the variable-selectivity assembly.

Example

Let's have an example showing how we could employ this principle to our advantage in a receiver. Suppose we have two mechanical filters, both having 6 kc band width but each having a different mid-frequency. The full 6 kc band width can be realized by adjusting the heterodyning frequency so that a signal passing through at the mid-frequency of the first filter will enter the second filter at its mid-frequency. Varying the oscillator plus or minus 2 kc will result in a 4 kc band width since portions of the spectrum passed by one filter will not be accepted by the other. Tuning the oscillator 5 kc from the full-width position will allow only a 1 kc "slice" of spectrum to be passed. Continuing with this example, let us assume that the first selective network passes a range from 500 to 506 kc and that the second passes all frequencies from 100 to 106 kc. Thus the mid-frequency of the first is 503 kc and that of the second is 103 kc. The converting frequency to secure the full 6 kc bandpass will be 503−103 or 400 kc. The oscillator could also be tuned to 503+103 or 606 kc with the same results (this, of course, assumes a symmetrical pass band with similar slopes on upper and lower edges). If, now, the oscillator is set to 602 kc it will convert anything coming out of the first filter to a new range of 96 to 102 kc. As we have previously assumed that the second filter accepts signals only in the range of 100 to 106 kc it is obvious that the only frequencies reaching the output will be those in the range 100 to 102 kc. Sideband inversion may be obtained by changing the conversion oscillator to the other of the two frequencies (400 and 606 kc in the above example).

Filter Requirements

As previously mentioned, we are not restricted to mechanical filters. The same benefits may be obtained by using crystals to chop one side of the response curve of the conventional transformer coupling used in i-f amplifiers with the addition of absorption wave traps to reduce the response of frequencies farther removed if required. The slope of the critical edge of the passband should be made as steep as possible. Several crystals may be used in the familiar shunt arrangement in order to secure a sufficiently rapid cutoff.

Naturally the formulas to use will be dependent upon the crystals available as well as which edge we select to be the steep-slope edge. The four formulas given here take care of all possible cases of two filter combinations with the steep slope at the upper or lower frequency limits of the pass bands.

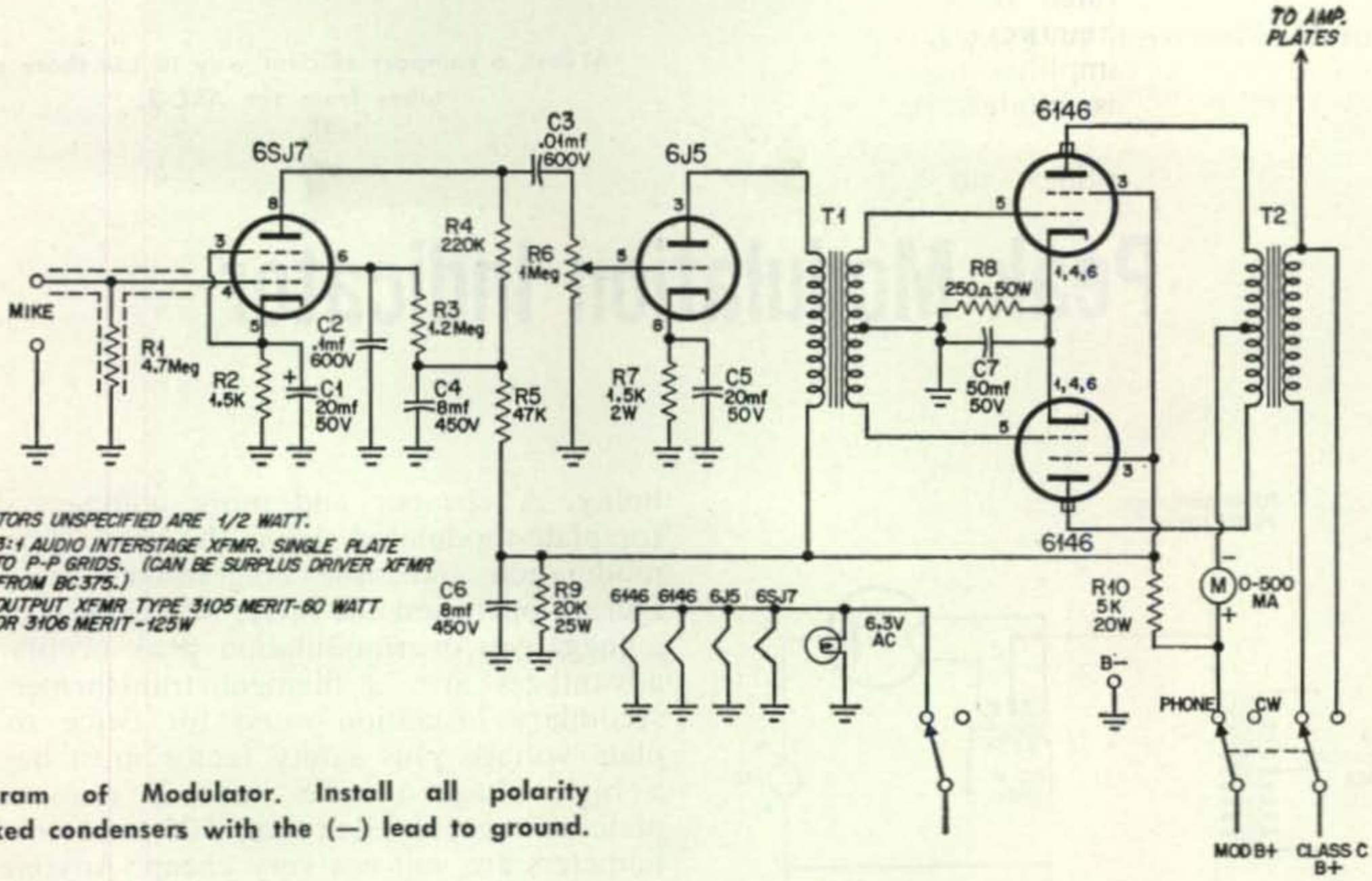

RESISTORS UNSPECIFIED ARE 1/2 WATT.
T1--3:1 AUDIO INTERSTAGE XFMR. SINGLE PLATE TO P-P GRIDS. (CAN BE SURPLUS DRIVER XFMR FROM BC375.)
T2--OUTPUT XFMR TYPE 3105 MERIT-80 WATT OR 3106 MERIT-125W

Diagram of Modulator. Install all polarity marked condensers with the (—) lead to ground.

bargain 125 watt modulator

Jack Taylor, W4CWB
2025 N. Madison St.
Arlington 5, Virginia

Curt Wilson, W4TEF
5814 Brook Drive
Falls Church, Virginia

If you need a good modulator for that 100 to 250 watt rig then you will be interested in how we'uns got the mostest for the leastest and get continual raves on quality besides. It took a lot of head scratching to come up with a circuit which would leave us plenty of beer money and still put out all the modulation we ask for.

The performance of the 6146 tube is the gimmik. A quick look at the data sheet for the 6146 shows us that it is an excellent tube for use in class AB_1 audio applications; it also shows that two of these tubes are capable of producing 120 watts of audio without driving power—yes we said without driving power! Thus the need for a husky power amplifier stage in the speech amplifier section is eliminated. Also eliminated are the multiple distortion problems arising from the high grid currents required to drive class "B" modulator tubes in this power range. Since no grid current is drawn, a small inexpensive driver transformer functions well in this circuit as T_1.

The modulator meets the requirement of good speech reproduction with an audio output of 60-80 or 100-125 watts, depending on the modulation transformer selected, or in other words enough output to handle rigs from 100 to 250 watts of carrier. It is also of simple design, easy to assemble and it has more than ample gain to operate with a crystal mike plus plenty of extra "oomph" for those occasional weak fone-patch inputs.

The heat dissipated by this unit is negligible for the amount of space it occupies and you should experience no difficulty in the adjustment or operation of the modulator. No special precautions beyond the usual basic rules of audio amplifiers need be observed.

Now for some discussion about the power supply. A separate power supply may be used as is done by W4TEF or it may even be taken from the class "C" r-f amplifier supply as is done by W4CWB; however, good dynamic regulation is desirable in any plate power to a modulator. If your present supply is used, it should deliver 500 to 700 volts and be husky enough to supply the combined current load.

We have experimentally varied the plate supply from 400 to 750 volts with no change in bias and with no noticeable detrimental effects on the modulator or modulation quality. Nat-

[*Continued on page 102*]

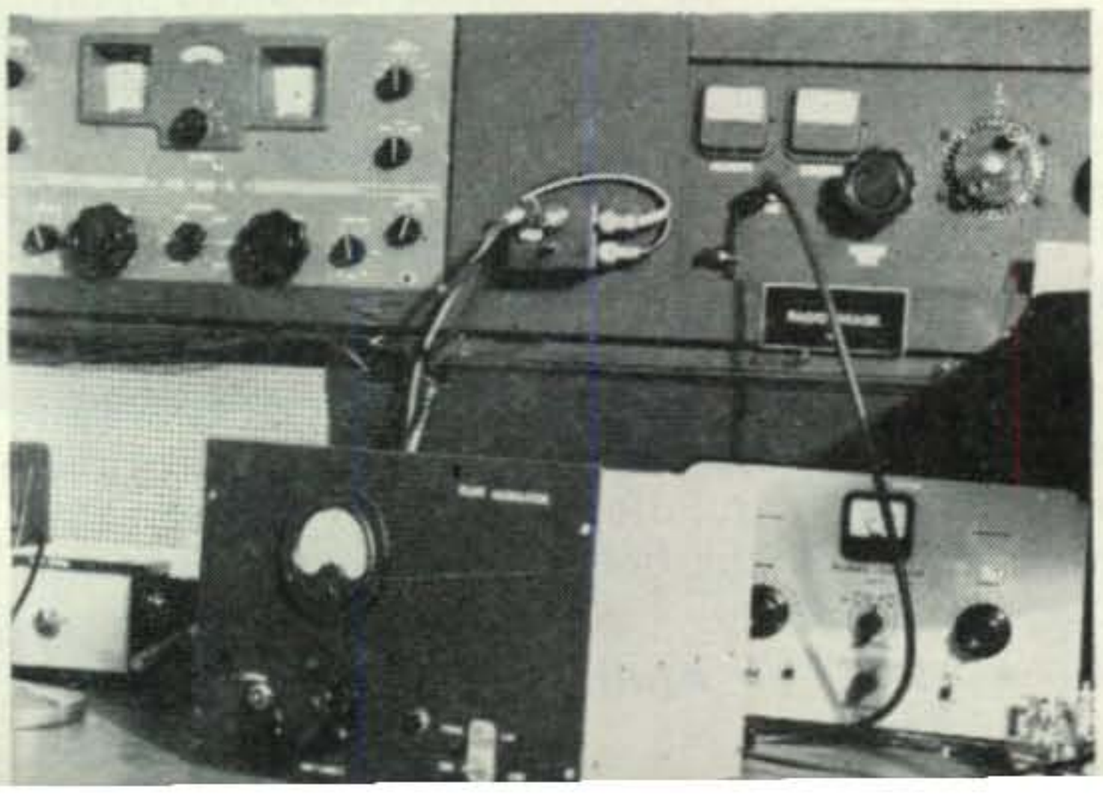

Order this "E-Z as TT" Globe Scout 680A Kit



ONLY
$99.95

6-80 Meters
65W CW
50W FONE

with the new FORWARD LOOK!

Here's a compact, self-contained bandswitching transmitter for 65W CW, 50W Fone, plate modulated. Has built-in power supply. High level modulation maintained. Now improved for TVI suppression. Pi-Net output on 10-80M; link-coupled on 6M, matching into low impedance beams. New type, shielded meter. Size: 8x14x8" Kit comes complete with all necessary tubes and parts and step-by-step instruction manual, making assembly as "easy as pi".

Scout 680A, wired & Tested: only $119.95

Inquire about the new
WRL 6M VFO for use with Scout, $49.95

WRITE OR STOP IN AT

GIL SEVERNS — W6QR
AMATEUR DISTRIBUTORS
1340 East Florida • Helmet, Calif.
Phone: Olive 8-5115

For further information, check number 36 on page 126.

LM Freq. Meter, heterodyne crystal calibrated, modulated, 125KC to 20MC. Exc. less calibration book $24.95

J38 High Speed Telegraph Key with on and off switch, adjustable spring tension and adjustable spacing, mounted on bakelite base. Brand New $1.69

BC-659 FM Receiver-transmitter, xtal controlled, two channels, freq. range 27-38.9, 9 Mc, 13 tubes, built-in speaker, dual meter for testing filament and plate circuits. Exc. **$6.95**

BC 620—Same as above except less speaker and 20 to 27 Mc. **$4.95**

BC 683. Ten Channel Push-button or continuous tuning FM RECEIVER 27 to 39 Mc complete w/tubes, speaker, squelch circuit. Exc. **$19.95**

BC 603. Same as above except to 20 to 27 Mc. $6.95
12 Volt Dynamotor for above receivers. Exc. ..... $2.95 ea.

BC 604—10 Channel, 30 Watt Crystal Controlled 20 to 27 Mc Transmitter. Complete with tubes. Ship. wt. 30 lbs. Exc. **$3.95**

I-208 SIGNAL GENERATOR. A standard of voltage freq. and freq. deviation for the testing, alignment, calibration and sensitivity measurement of FM receivers. Freq. range 1.9 to 4.5 Mc. and 19 to 45 Mc. Operates from either 12 VDC or 110 VAC. Govt. acq. cost, $1800.00. Exc. $59.50

HS-30 HEADSETS

Low impedance hearing aid size, w/headband, rubber insert and Y cord.

Like New ..... Only $ .89
10 for $8.00

MODULATOR . . . with tubes . . . 2 ea. 813; 1 ea. 807; 1 ea. 5R4; 2 ea. 6AG7; 1 ea. 6D4, EXC. Ship. wt. 60 lbs. $14.95

WRITE FOR NEW BULLETIN
25% Deposit required with orders

R W ELECTRONICS

2430 So. Michigan Ave., Chicago 16, Ill. Dept. CQ

For further information, check number 37 on page 126.

MODULATOR [*from page 37*]

urally, the turns ratio of the modulation transformer should be changed to match the class "C" load any time the high voltage is changed greatly. The match sheet furnished with the recommended universal modulation transformer makes the match "duck soap."

We are currently running –45 volts on the grids and 600 volts on the plates of the 6146 tubes. *A word of caution:* Never operate any modulator without a class "C" load on the secondary of the modulation transformer, to do so could cause internal arc-over due to excessive voltages developed within the modulation transformer.

The schematic diagram plus the photos and captions make construction clear.

With the modulator on the air, what results can be expected? Well . . . W4TEF has been

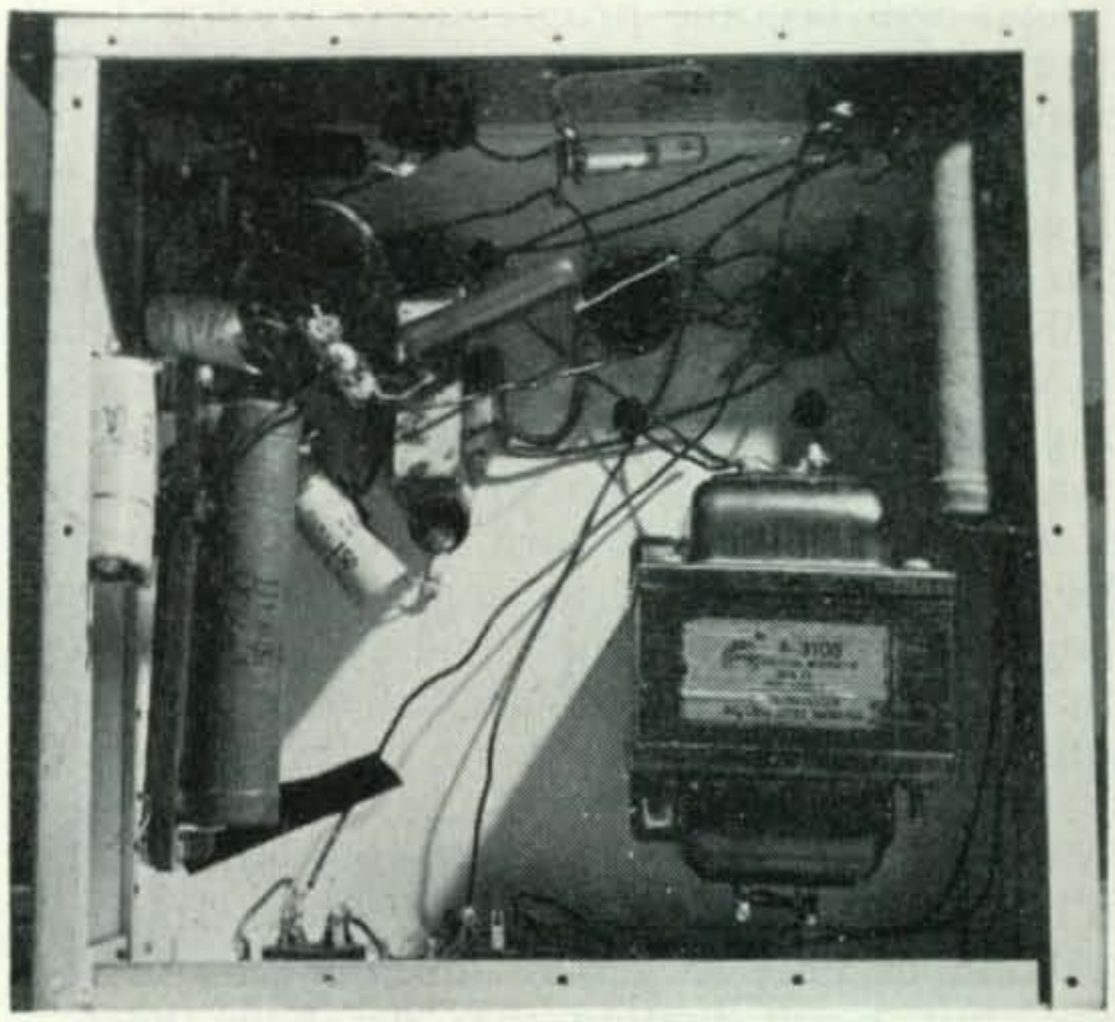

Bottom view of modulator.

using the 6146 tube in modulation service since the tube was first available and the modulator described in this article has been on the air tested for over two years in the shack of W4CWB with no derogatory report; quite the contrary, however, for the following are typical of comments received:

a Florida ham:

> "The band is changing and you're down to zero "S" units, but still readable."

a DL4:

> "Plenty of strong sigs in there OM but yours is the most intelligible."

a VE:

> ". . . terrific modulation . . . surprised it's home brew . . . appreciate schematic."

It is worthy of note also that hams with Panadaptors have told us that our modulation quality is equally as good as the *finest* commercial equipment.

Now . . . let's have a look at that old parts list. . . . ■

Class B Modulators

Larry Levy WA2INM

NOT many hams realize that the power supply for a plate modulator on an AM rig usually has to be larger, or as big as, the power supply powering the final.

In Class A applications, the power supply has to be able to deliver twice as much power as the final input. A Class A modulator has the maximum theoritical efficiency of approximately 30%. Practical efficiencies average about 20-25%. In an application where a transmitter of 100 watts input is being modulated by a Class A modulator, the modulator input will be between 200 and 250 watts. It could be more, as these figures are not counting transformer losses or mismatch.

Class AB modulators draw lower standby currents and therefore require a smaller power supply than Class A. The size usually is about equal to the one used to power the final. The efficiency runs about 40-50%.

The most efficient form of modulator is Class B. Class B differs from Class A and AB in that driving power is required, whereas in Classes A and AB no driving power is required, only voltage. Considering the cost per watt, it cost far less to get an additional 5-10 watts of drive than to build the additional capacity in the power supply. Most Class B circuits require a fairly stiff bias supply capable of giving a few mils of current. Several other circuits use triodes and require a large amount of drive. The most practical (and the simplest, therefore the cheapest) circuit is one using zero bias and tetrodes. The efficiency runs between 70 and 75% and the power supply can be about ½ (or even less) the size of the power supply used to power the final. It must be capable of large current peaks and well-regulated.

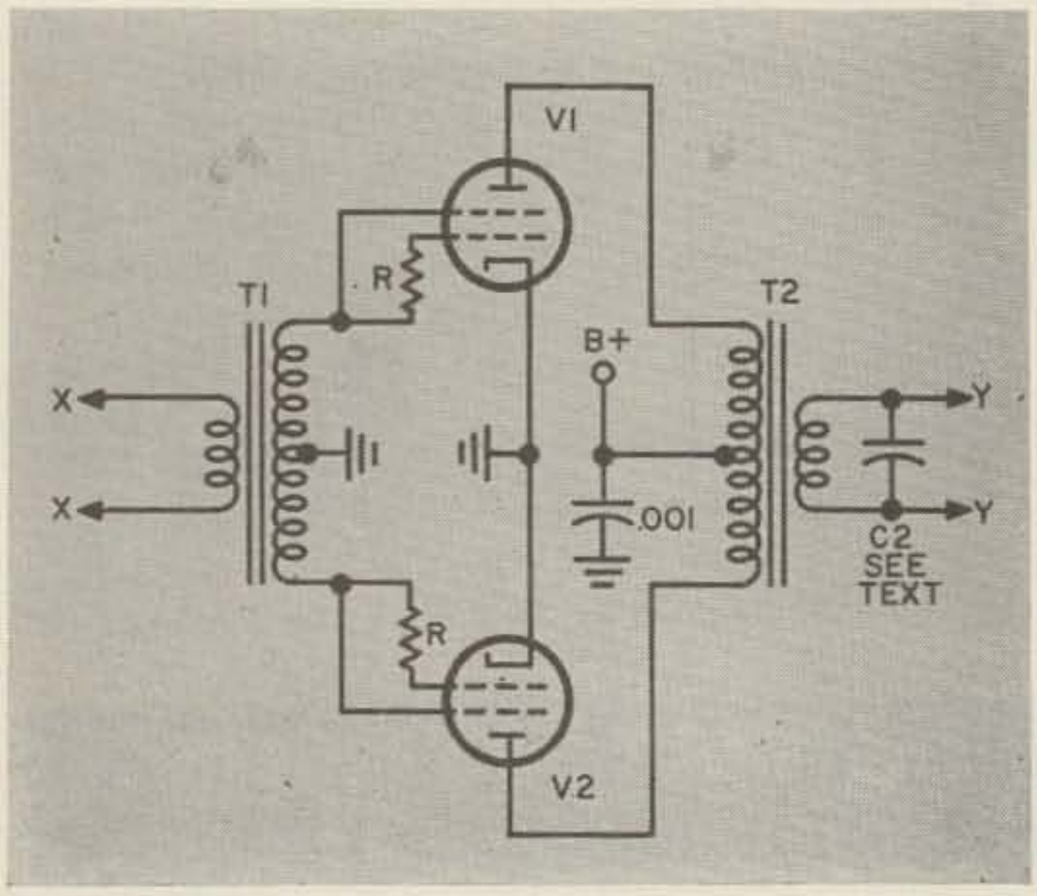

In a tetrode, the screen voltage as well as the grid voltage, has a lot to do with the plate current. In a case where the screen as well as the control grid are at ground potential, the plate current is extremely low, usually in the order of a few mils. When the screen starts to become positive, the plate current starts to increase greatly, as long as the grid is not negative. In the circuit shown, a very high audio voltage is applied between the screens. Resistor "R" lowers the voltage on the grid in the proper ratio. Otherwise, the grid dissipation of the control grid would probably be exceeded, as well as the fact that so much positive voltage would drive the tube into saturation and cause severe distortion.

In a typical cycle, with no signal, the screens and control grids of both tubes are at ground potential and the plate current is extremely low (5 mils per tube with 807's). When an audio signal is applied, on the first half of the cycle, one of the tubes (call it V1 for convenience) starts to conduct because of a positive voltage on the screen and control grids. At the same time, Va is driven beyond cutoff by the negative voltage on both grids. At the end of the first half of the cycle, both grids are at ground potential, and on the second half of the cycle the same thing happens with V2 conducting and V1 cut off. About 100 to 400 volts of audio are required between the screens, or 50 to 200 volts from each screen to ground. This varies with the tubes and power level at which the tubes are run.

T1 is an input transformer, the impedance matching the driver and the modulators. One possibility is to use a small hi-fi or PA amplifier to drive the modulators with T1 being a PP plate to voice coil transformer wired in reverse. Usually one delivering about 5 watts will do fine. T2 should match the modulator plates to the final. Sometimes connecting a small capacitor across the secondary of the modulation transformer will improve the quality of the modulation. If you desire to experiment, C2, which is optional, can be between 500 mmfd and .01. Usually one about .005 works well. The voltage rating should be at least two or three times the plate voltage on the final. The purpose of this condenser is to reduce some of the higher order harmonics of the audio signal. This will help reduce the

bandwidth of the signal. These harmonics, as well as higher frequency fundamental signals, may be present at the input of the modulator. There is also a possibility of the modulator itself generating some harmonics.

Using this basic circuit, modulators in almost any power class can be built. The one I am using uses 807's to modulate a 100 watt transmitter. The plate voltage is about 350 volts. The value of R is 27K. Approximately 3½ watts of drive are required. The standby current for two tubes is 8 ma. On modulation peaks this increases to about 220 mils. Using 750 volts and a little more drive, this same modulator can fully modulate a transmitter in the 200-250 watt power class. At 750 volts on the plate, the standby current is only about 15 or 20 mils. For lower power rigs, 6V6's will give about 18 or 20 watts output and will nicely modulate a 40 or 50 watt transmitter. 6L6's have more than enough modulation for a 6146, 807 or any transmitter up to about 80 or 90 watts.

The power transformer used in these modulators can be one taken from an old TV or radio. There is not mucn load on the power transformer as the peak currents are drawn for relatively short periods of time. Most of the time the standby current is only a few mils and this gives the transformer a chance to recover.

One possibility for a modulator tube is the 1625. The characteristics are identical to an 807 except that it has a 12 volt heater and a different socket. They are available for about 25¢ surplus and a pair of them are capable of modulating a 200 to 250 watt transmitter. They can be run at lower power levels, run quite cool, and are efficient. For lower power levels it is more practical to use lower plate voltages, as the efficiency (practical) increases when the tube draws lower standby current.

This modulator has been in use for over a year without any failures in tubes or components. The reason I mention this is that most of the parts come from the junkbox and some of them (especially in the power supply) are being subjected to overloads of 300-500 percent (on peaks). The results have been excellent and this modulator combined with speech-clipping in the driver completely modulates the transmiter at a cost lost lower than the power supply alone of a Class A modulator.

. . . WA2INM

Letter

Dear Sir:

This will acknowledge your letter of recent date regarding amateur radio call letters on registration plates. You are advised that no call letter plates are to be issued under the present plans for 1962.

William S. Hults
Commissioner of Motor Vehicles
State of New York

New York is a rotten state.

Swan Engineering Co.

SSB Transceiver



130 watts PEP input to 6DQ5 Power Amplifier.
High frequency crystal lattice filter; 3 Kc. nominal bandwidth, used for both transmit and receive.
Unwanted sideband down approximately 40 db. Carrier suppression approximately 50 db.
Transmits automatically on receiving frequency.
Exceptional mechanical, electrical and thermal stability. Frequency is practically unaffected by voltage or temperature variations, or by vibration when driving over rough roads.
Receiver sensitivity better than 1 microvolt at 50 ohm input.
Smooth audio response from 300 to 3,000 cycles provides excellent voice quality for both transmitting and receiving.
Control system designed for greatest ease of mobile operation. Front panel controls include: Main Tuning, Volume, Carrier Balance, Microphone Gain, Exciter Tune, P. A. Tune, P. A. Load, T-R Switch, Supply On-Off Switch, and Tune Switch.
Main Tuning control is firm and smooth, with 16:1 tuning ratio. Calibrated in 2 Kc. increments.
Transceiver produces approximately 25 watts carrier output on AM by simply adjusting the Carrier Balance control. Receives AM signals very satisfactorily.
3-Circuit microphone jack provides for Push-to-Talk operation.

POWER SUPPLY REQUIREMENTS:

275 volts DC, nominal, at 90 ma., receive and transmit.
650 volts DC, nominal, at 25-200 ma., transmit only.
80 volts DC, negative bias, at 6 ma., receive and transmit.
12.6 volts AC or DC at 3.45 amperes, for filaments.

A revolutionary new design by Swan Engineering provides single sideband communication at a surprisingly low cost. The one-band design gives exceptional high quality performance in all respects on the chosen band. The following models are available—

Freq. Range	Sideband
SW-175 3.8—4.0 mc.	Lower
SW-140 7.2—7.3 mc.	Lower
SW-120 14.2—14.35 mc.	Upper
SW-115 21.25—21.45 mc.	Upper

$275
NET PRICE

ELLIOTT
ELECTRONICS, INC.
418 N. 4TH AVE.
TUCSON, ARIZ.

MD-7

A Cheap, simple plate modulator

Gary Stock WA2PGX
115-77 224 Street
Cambria Hts. 11, New York

AS the title implies, this modulator is an inexpensive unit requiring a minimum of construction time and chassis butchery. It is just the thing for modulating most Novice or CW carrier controlled phone rigs having anywhere from 50-to 120 watts input. These include the DX 20-60 series transmitters, HT-40, Globe Chief, Navigator, and especially ARC-5 rigs converted for ham use, because these were originally used with this modulator. Using carrier control I found that I could barely get through the first layer of QRM, but now I can push through almost anything. Even more important, the all too familiar report "You're 40db over S-9, but can't you bring up the audio just a little?" isn't heard in my shack any more.

The heart of this modulator is a surplus MD-7, ARC-5 plate modulator which is available locally for about eight or nine dollars, depending on your patience and ability to argue price. One word of caution though, make sure you get an MD-7 and not a BC-456 screen modulator. It is possible to mistake one for the other because of the similarity in their chassis. The MD-7 has two 1625's which are visible when you remove the unit's top plate, the BC-456 has only one. Also, their positions are marked on the unit's cover.

The main part of the conversion consists of adding a speech amplifier to the modulator to make possible the use of a crystal mike or other low output type. A dual triode, a 6SN7, is mounted in the socket originally occupied by the 12J5, while the 12J5 driver tube is placed in the VR-150's socket. This is done to facilitate the parts layout. I had both a 6SN7 and a 6 volt supply available, so I used them. It would probably be wise to use the 12 volt equivalent of the 6SN7, the 12SN7, and the existing 12 volt supply. Also, you can build the unit on a regular chassis. I didn't for two reasons: the tube sockets and transformer were already mounted, and the chassis looked pretty good as it was.

To begin construction, remove the cover plate and remove the tubes to prevent their breakage, then remove the bottom plate. Unscrew all components from the side of the chassis except for one 1.2 mfd condenser, and the dual 5 mfd and 20 mfd condenser; the tube sockets and the two 620 ohm resistors soldered to the 1625 sockets also remain. Remove all wires connected to the plugs at the rear of the chassis and all others necessary to free the components you just released. Leave the wires connected to the output transformer and also leave the wires connecting pins 3, 5, 6, and 7 of the two 1625 sockets together.

Next, remove the mike and key jacks from the rear panel and replace the mike jack with an Amphonol type 75-PC-1M mike connector or its equivalent. (the connector fits right into the original hole.) Remove both fuseholders and their covers, and fit the driver transformer in two of the holes left by the fuseholder on the left of the chassis. My pot fit in one of the holes left towards the front of the driver transformer, right in the corner, and I mounted the dual 20 mfd can on the right of the chassis. All directions referred to are looking at the underside of the chassis with the 1625 sockets to the rear. Mount the AM-CW switch on the front panel to the left of the square condenser, and mount your output socket in the space previously occupied by the three-prong dynamotor

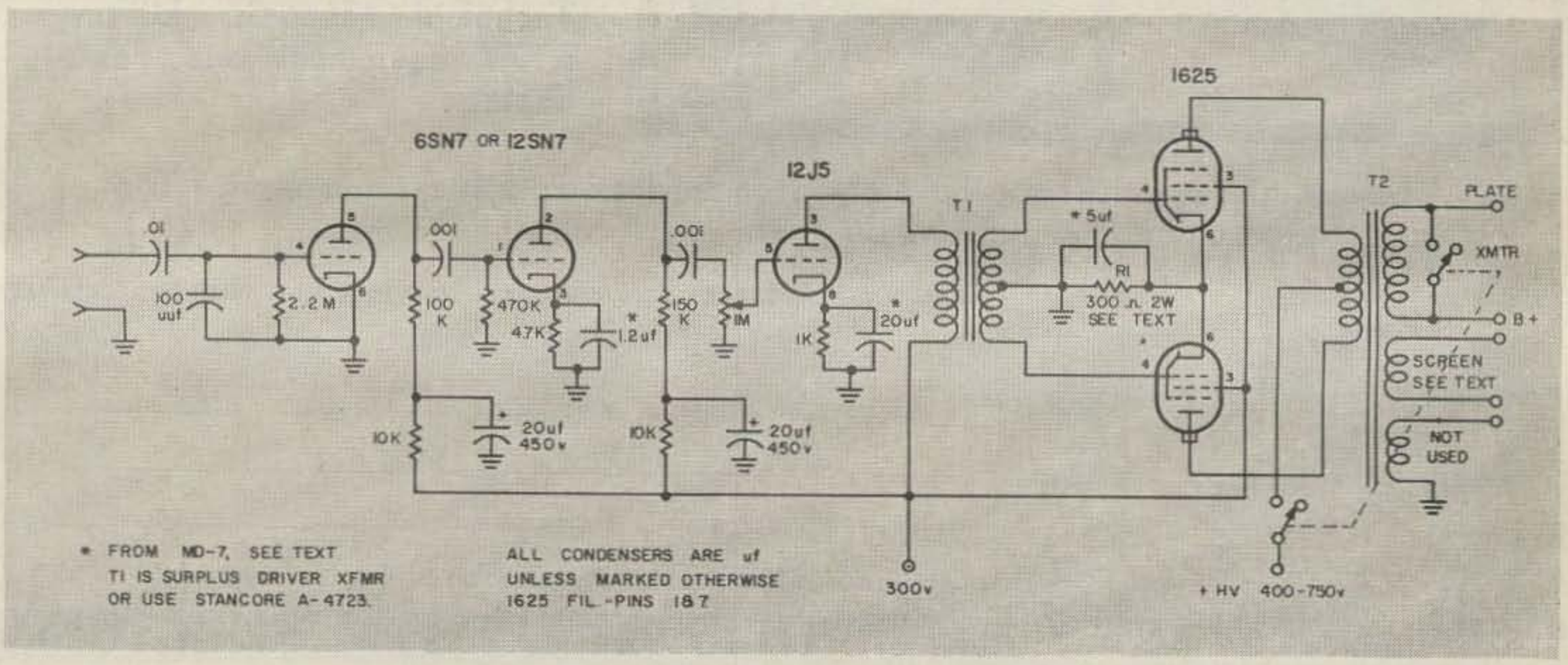

connector. This connector is easily removed by prying it up with a screwdriver. The actual wiring of the unit is straightforward; follow the usual wiring procedures and run the long lead from the 6- or 12SN7 to the gain control with shielded wire. The wires can be laid out for convenience in lacing if you wish, but this is not necessary.

As a final note I would like to say that the switching arrangement I have shown is most suited for my rig; however, all that is required is that the AM-CW switch shorts out the secondary of the modulation transformer during C.W. operation and that there is provision for removing the high voltage from the plates of the tubes at the same time.

There are two outputs available on the transformer; one is roughly 6000 ohms and is a close enough match for most tubes operating in the vicinity of 600 volts at 150 mils such as the 807, 6146, 1625, and 6DQ5. This is only a partial list. The reason that you can match quite a few tubes is that the 1625's are running at about half their rated output and as such are very non-critical as to loading. The second output is a screen winding and this can also be used for most tubes with no ill effects. I used this winding when modulating my HT-40 because it has the screen tied to its own supply, and I came up with excellent results.

This ends the list of gory details associated with building the modulator; so, if you have dispensed with the proverbial smoke test, connect the rig, modulator and power supply and let everything warm up. Tune the rig in the CW position into a dummy load and turn the modulator on, making sure that the unit is in the AM position and that the transformer is not shorted out. When you talk into the mike, the lamp's brilliance should vary with your voice intensity. Adjust the gain control until it just brightens on voice peaks. The best way to properly adjust the unit is with a scope, but since most of us don't have one, here is an alternate method. Have someone with a crystal filter in his receiver listen to your signal as you bring the gain up. When you just begin splattering, reduce the gain a trifle and you're in business.

In general, you should have no trouble building the unit or getting it into operation, and you will find that the modulator has plenty of reserve punch, even when delivering a full 60 watts of audio. Also it will make an excellent driver for any high level modulator, so the unit really will be a good, long term investment.

...WA2PGX

CANDEE

COMMAND SET SPECIALS!

Famous Q-5'er. 190-550 kc. The receiver you've been looking for at only	$9.95
BC-454/R-26: 3-6 Mc.	7.95
BC-455/R-27: 6-9.1 Mc.	7.95
MD-7 MODULATOR: Special	3.95
T-18/ARC-5 XMTR. 2.1-3 MC excellent condition	4.95
T-19/ARC-5 XMTR. 3-4 MC excellent condition.	6.95
T-20/ARC-5 XMTR. 4-5.3 MC excellent condition	4.95
T-21/ARC-5 XMTR. 5.3-7 MC excellent condition	4.95

HEADSET BARGAINS!

HS-23: Hi impedance. Leather covered headband. Brand new. Great buy. Only	$5.95
HS-33: Low impedance. Leather covered headband. Brand new. A J. J. Candee Special	6.95
Hi Fi Headset: 15,000 cycles! Brand new with chamois cushions. Terrific! Only	9.95
CD-307A Headset Extension Cord: Brand new. Approximately 5 ft. length. Only	.98

APX-6 TRANSPONDER

A midget warehouse of parts! Blowers, three Veeder-Root counters, I. F. strips, cavity, over 30 tubes, etc. Includes **3E29 tube.** Good cond.

A STEAL AT ONLY	$14.95
APX-6 Manual	$1.49

WALK-IN BARGAINS GALORE!

J. J. Candee has purchased the lion's share at a closing auction of one of the world's largest surplus warehouses. Our opportunity is yours. Come see all the goodies! We'll list some next month for mail order.

YOU GOT IT! WE WANT IT! LET'S DEAL!
We're paying top $$$ for GRC-9; PRC-6, -8, -9, -10. All electronic test equipment and lab eqpt.

All items FOB Burbank, Calif., subject to prior sale.
In Calif. add 4%. Min. order $4.95.

J. J. CANDEE CO.

509 No. Victory Blvd., Burbank, Calif.
DDD area 213 — VI 9-2411

244 S. Park Avenue, Tucson, Arizona
DDD area 602 — 624-2014



HAM-TV

Complete instructions for getting on TV for under $50.00. Join the Fun. **$3.00**

73 MAG, 1379 E 15, Bklyn 30, N.Y.

BARRY

SELLS | FAST & FAIR

HAM GEAR | SWAPS

BUYS TUBES & EQUIPMENT

Barry Electronics

512 Broadway
New York 12
WA 5-7000

Send for Catalog

Plate Modulate Your DX-40

Fred Blechman K6UGT
14512 Daubert St.
San Fernando, Calif.

THE advantages of plate modulation over screen or cathode modulation are considered to be worth the extra cost of the relatively higher powered modulator required. This article describes a simple modification of the DX-40 to allow its use with an external plate modulator, yet allows the operator to return the DX-40 to its original circuitry at the flick of a panel switch for built-in controlled carrier modulation, or for CW operation. The only parts required are a simple DPDT switch, a resistor, a small terminal strip, two banana jacks, a double banana plug, a couple of feet of hook-up wire—and the modulator.

The UM-1 Universal Modulator (Globe Electronics, $34.95 in kit form) is ideal for plate modulating the DX-40. It furnishes 25 watts of audio, so running the DX-40 at slightly over 50 watts input results in almost 100% modulation. Signal reports verify the improvement with plate modulation, especially under poor band conditions or QRM.

The schematic showing the changes (Fig. 1) is almost self explanatory, especially when compared to the DX-40 schematic in the Heath manual. However, for those that prefer to make the changes step-by-step, here are the details:

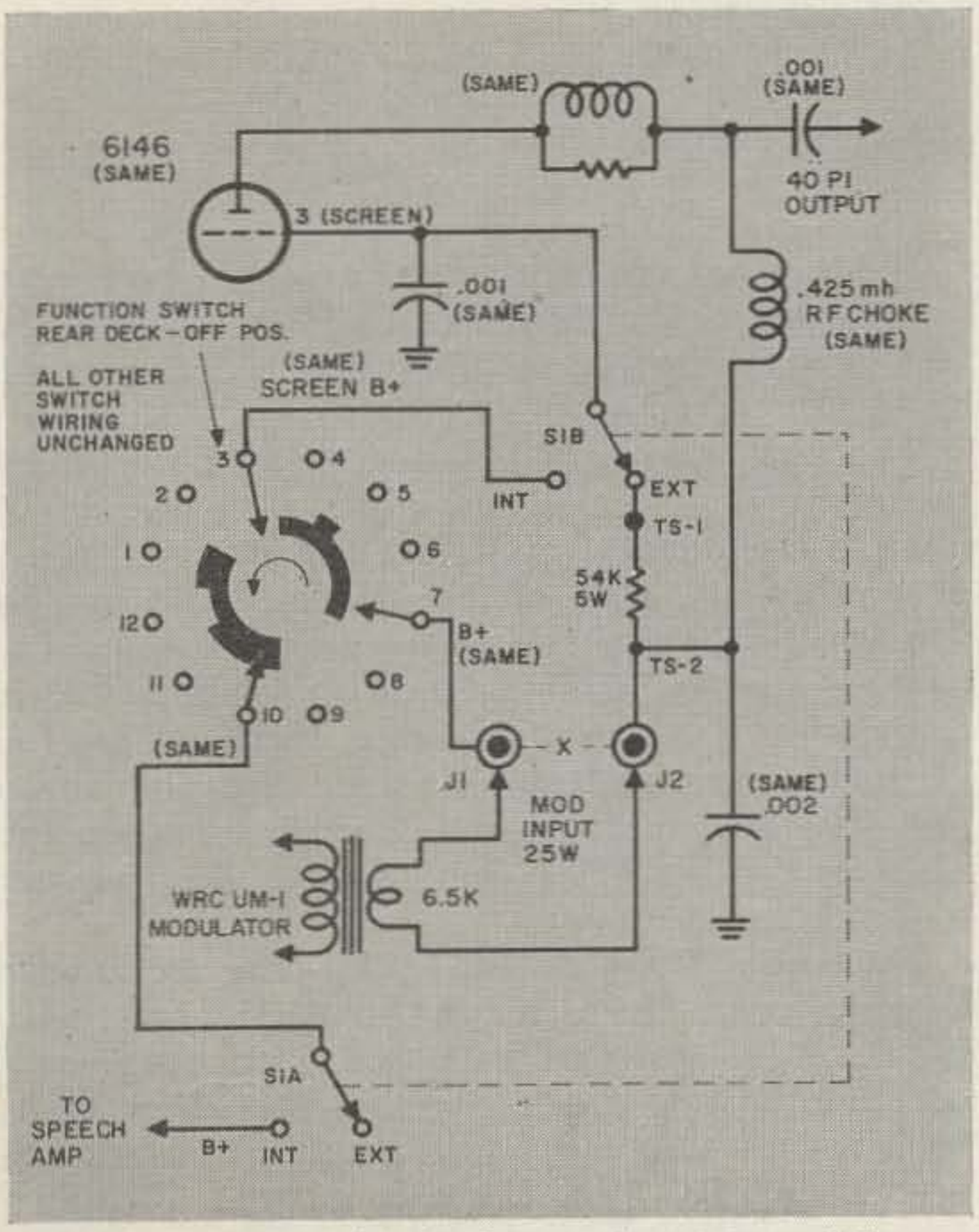

Figure 1. DX-40 circuit changes for plate modulation.

(Refer to Fig. 1 and Photo 1)

(1) Install a DPDT switch, toggle or slide type, between the key jack and the function switch on the front panel of the DX-40. This switch will be called S1A and S1B.
(2) Install two *insulated* banana jacks (J1 and J2) on the rear apron between the mike input and the antenna output connectors. Space these banana jacks so that the centers are three-quarters of an inch apart, to allow mating with a double banana plug from the modulator.
(3) Remove the wire from function switch lug #3 and solder this wire to S1B center lug.
(4) Solder a jumper wire between S1B "internal" lug and function switch lug #3.
(5) Install a two-lug terminal strip (TS1 and TS2) to the underside of the chassis in a convenient spot (see Photo).
(6) Connect (do not solder yet) a 54K 5 watt resistor (or one 10K 2 W and two 22K 2W in series) between the two terminal strip lugs TS1 and TS2.
(7) Solder a wire from S1B "external" lug to lug TS1 of the new terminal strip. (Note: Either lug may be considered TS1. The other lug will then be TS2.)
(8) Remove the wire from function switch lug #7 and connect (but do not solder yet) to terminal strip lug TS2.
(9) Twist two 14-inch long insulated wires together to make a twisted pair. Strip ¼-inch of insulation from each end of both wires.
(10) At one end of the twisted pair of wires, solder one wire to banana jack J1 and the other wire to banana jack J2. Route the twisted pair along the existing cabling on the underside of the chassis to the front panel.
(11) Solder one of the twisted pair wires to function switch lug #7.
(12) Solder the other twisted pair wire to terminal lug TS2.
(13) Remove the wire from function switch lug #10 and solder it to S1A "internal" lug.
(14) Solder a jumper wire between center lug of S1A and function switch lug #10.

This completes the wiring. Now here's the way to use the DX-40 now that it's modified:

Plate Modulation Operation

(1) Put the new switch S1 in the "external" position.
(2) Plug the modulator output (pins 1 and 8 of the UM-1 accessory socket) into J1-J2 banana jacks just installed on the back of the DX-40. A double banana plug is very convenient for this connection. The modulator output tap should be about 6000 ohms. If you are using the UM-1 the 6500 ohm output tap will match the DX-40 very nicely.
(3) Connect your microphone to the modulator input.
(4) Put the DX-40 function switch in the "Tune" position and adjust the grid drive to about 2-3 ma.
(5) Put the function switch in the "Phone" position, dip the final and load to 100 ma. plate current. Operation above 100 ma. is not recommended in this mode.
(6) Advance the gain control on the modulator as you speak into the mike. You will probably hear the modulator talking back to you a little and the plate current needle on the DX-40 may flicker. Adjust the grid drive control to stop the flickering during modulation. With the UM-1 and a crystal mike the modulator gain control may be run "wide open". Don't eat up the mike, however. Adjust your voice power and mike distance from on-the-air checks or with an oscilloscope.
(7) When using the UM-1 Modulator, it may be switched on and off with the DX-40 automatically. Just connect the coil of a 115 volt 60 cycle relay to pins 5 and 6 of the DX-40 accessory socket and connect the contacts of the relay (the normally open contacts) to pins 4 and 5 of the UM-1 accessory socket. (If there is a jumper between pins 4 and 5 of the UM-1 socket, remove it, of course).

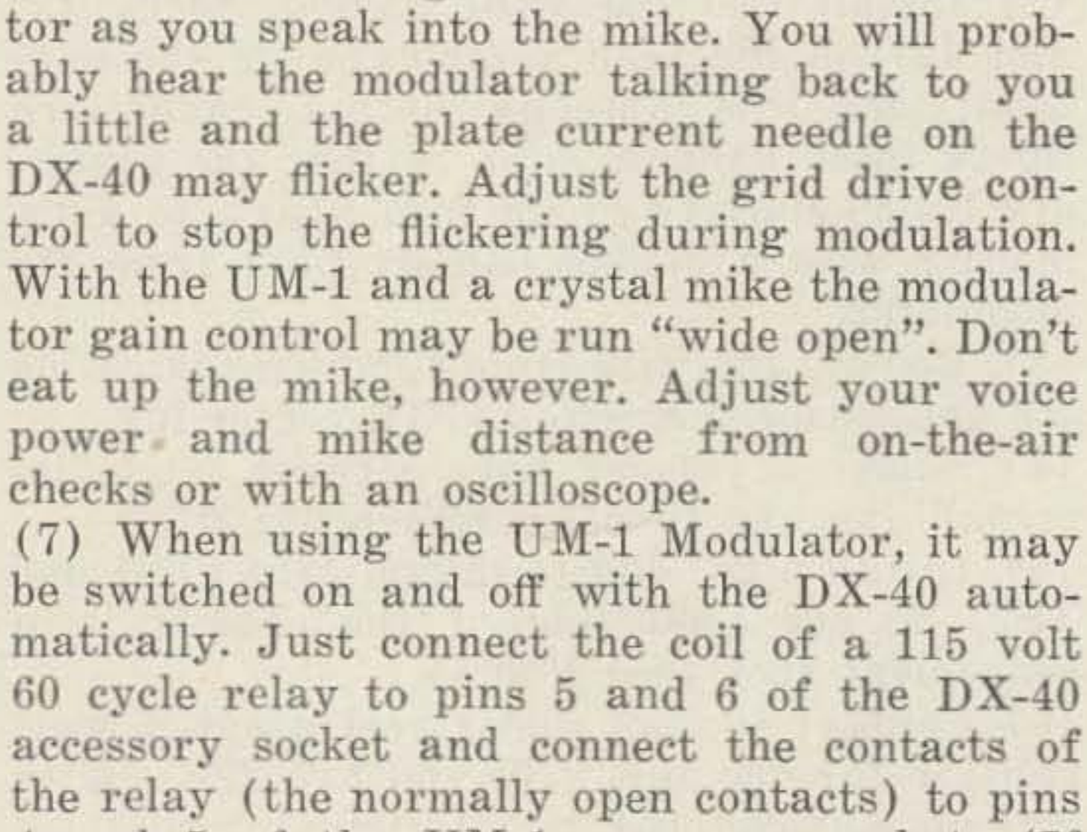

Controlled Carrier (Internal) Modulation

(1) Remove modulator input plug at J1-J2.
(2) Put a jumper across J1-J2. (A double banana plug with a wire jumper makes a quick change even quicker).
(3) Put the new switch S1 in the "internal" position.
(4) Connect your microphone to the DX-40 mike input connector.
(5) Since all internal wiring is now electrically identical with the original wiring, the DX-40 should now be operated just as if you never saw this article in the first place.

CW Operation

Follow steps (1), (2), and (3) described above for Controlled Carrier Operation. Then follow step (5).

That's all there is to it. Whew!

. . . K6UGT

Note 1: Use 10K 2W and two 22K 2W (or similar) in series. Screen current is approximately 8 ma. **Note 2:** When controlled carrier operation is desired short out J1-J2 and switch S1 to "Internal." Don't forget to change the mike from the modulator to the DX-40. **Note 3:** Switch S1 mounts nicely on the front panel. J1-J2 are banana jacks which mount on rear apron of the DX-40, near the mike input. **Note 4:** When using the external modulator load to 100 ma plate and 2-3 ma grid with the function switch on "Phone." Adjust the grid drive for a steady meter when modulating.

Minimizing Test-Lead Requirements

When you're using several types of test gear in the shack, the number of different types of test leads required rapidly reaches the point of total confusion.

The usual snarl of test leads can be reduced to only two or three sets simply by standardizing the connectors used on the various items of equipment. One of the best connectors to use for this purpose is the ordinary mike fitting (Amphenol Series 75 or equivalent). This connector is a modified coax termination for rf gear, a completely shielded joint for audio and low-level meters, and it isn't so expensive that conversion of all your gear will drive you to bankruptcy court.

Typically, three 3-foot leads—one made with flexible coax such as RG-58A/U, one with mike cable, and one with test-lead wire—will be enough. Use gator clips on the other ends, or a set of universal test prods. A 3-foot extension of RG-58A/U with a type 75-MC1F connector at each end adds to the versatility.

. . . K5JKX/6

Transistor Modulator

Forty Watts

Monroe McDonald KL7DLC

THE unit I am going to describe in this article is a very efficient audio amplifier suitable for use as a plate modulator for a mobile or portable medium power (sixty to ninety watts rf) transmitter. The audio output is rated at forty watts, but the unit has delivered in excess of sixty watts to a dummy load. No audio quality tests were made at this power level, though. With no filaments to heat, the unit need not be energized during standby (receive) periods, so there is no standby drain. When the unit is energized during transmit periods, the idle drain is less than half an ampere at twelve volts, and the drain at full rated output (forty watts) with a sustained tone is less than eight amperes.

The unit as I use it is built into a power-supply-modulator unit, with a 600 volt 200 mil transistor power supply, so that plenty of "punch" may be supplied to a single 6146 rf section without straining. The power supply uses a *Triad* toroid and the circuit supplied by the manufacturer, so I won't concern myself with it in this article, except to state that the power supply puts two kilocycle noise onto the twelve volt line that takes several thousand microforads of filter capacity to keep out of the modulator.

Although the modulator was designed with efficiency and power out as the main goals, I was pleasantly surprised to find that the audio quality is quite good, and compares with fixed stations in "naturalness." I use a carbon microphone, converted to use a Western Electric F1 telephone button.

The modulator and power supply, plus all the associated relays, filters, etc., are mounted in a box about ten by five by four inches, with the modulation transformer sticking out on top. The driver transistor and microphone transformer are included in the rf section of my rig, however, because that is where the mike plugs in, and I wanted to reduce mike lead line pickup.

The modulation circuit is very simple, and therein lies one of its virtues. The construction is nearly all mechanical, with not much wiring to do once the transformers and transistors are mounted. I did mount a terminal strip near the driver transistor to provide tie points for the components in that part of the circuit.

One unfortunate aspect of this unit, or any using recently developed components, is that the parts must nearly always be purchased new. Few people have transistors or transistor transformers in the high power category in their junk box. Using all new parts this unit will cost around forty dollars, and this might discourage those after economy.

The most important part of this modulator is the output stage, which may be used with any speech amplifier capable of delivering a watt or so. This way, microphones other than carbon may be used, or screen-modulated transmitters, such as the Heathkit mobile,

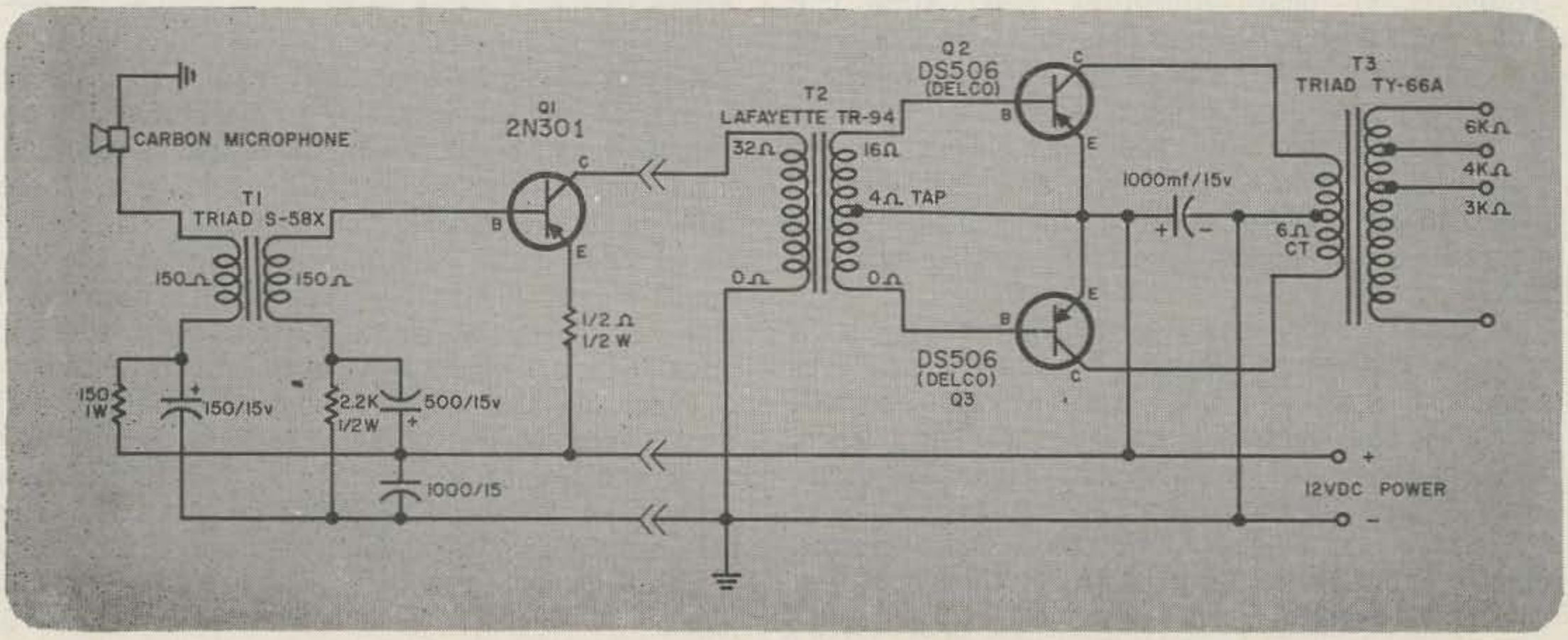

could be converted to plate-modulation, effectively increasing the power output four times. A driving transformer should be used to match the driver tube or transistor to sixteen ohms center-tapped (due to the impedance-match square law, the center tap for sixteen ohms is four ohms.)

Confused by all the complicated bias networks I saw in transistor amplifier circuits, I experimentally determined the characteristics of the transistors I had decided upon, and designed the circuit over two years ago. I have since seen similar circuits in lower-power application with the name zero-bias class-B amplifiers. The output transistors are biased slightly below cut-off by returning the base circuit to the emitters, making full class B operation. This is supposed to introduce some distortion, but it is not noticeable in my unit. The driving impedances of the transistors were also determined experimentally, as Delco would supply no information on the use of their transistors in such applications.

The driver circuit was designed as a class A amplifier using RCA characteristics, and input and output impedances. Since the input impedance of the driver and the output impedance of the carbon mic are about the same, I first tried capacity coupling between the two, but found the stage tended to oscillate because of collector—base coupling through the twelve volt line, even though that line was well-filtered. With a mic. transformer, the phase may be reversed to cancel this feedback. The mic. transformer by-pass filter capacitor must be returned to the emitter supply line, and not ground, to prevent oscillation. The base resistor was selected to give approximately 375 mils idle collector current, and turned out to be 2200 ohms in my unit.

No gain controls have been provided in this circuit, as I believe none are necessary in mobile operation, where the same operator uses the rig all the time. The overall gain may be initially set up by juggling the value of the mic. bleeder resistor, so long as the mic. button current does not exceed about fifty mils. I use about forty mils button current, to get full modulation with my normal speaking, and the 150 ohm resistor was selected for that purpose.

Very heavy filtering is required across the power input to the audio output stage because the current drain varies greatly with modulation, and unless the modulator is connected to a battery with very short, heavy leads, an unfiltered modulator can modulate the twelve volt power line, causing serious circuit interactions. Heavy filtering across the driver is required to reduce receiver and transmitter power supply noise fed into the audio from the twelve volt line. At power transistor impedance levels, heavy filtering means capacity in the thousands of microfarads.

In construction of this modulator unit the transformers should be located according to good audio practice to minimize magnetic coupling. In my unit, the mic transformer is in the rf unit with the driver transistor, the driver and output transformers are at opposite ends of the modulator unit and at right angles to each other, and the power supply toroid is near the output end, as far as possible from the lower level transformer. The output transistors are mounted through the outside of the box using the mica insulators and hardware supplied with them. The driver transistor is mounted on the back sheet of the rf section's metal shell with a mica insulator I made from material kept by hardware stores for stove windows. The transistors must be insulated electrically, but not thermally, from ground, as the transistor shell is the collector connection, and the heat-dissipating element.

I use an F1 telephone carbon button for a microphone, and any other mic. might have different gain or other circuit considerations. This telephone button has very good gain and fidelity, but has the disadvantage that it tends to pick up traffic noise. The "communications" carbon mics. pick up less noise, and require louder talking.

I got the driver transformer on a special sale, and it might be difficult to duplicate exactly. It is much larger than necessary, however, so a smaller substitute might be an improvement. The requirements for the driver transformer are a couple of watts power capability, a sixteen ohm secondary with a tap at four ohms, and a primary to match the driver used, in my case thirty-two ohms, with a half-ampere rating.

The input impedance of the driver transistor is about seventy-five ohms, and as the carbon mic. output impedance is nearly that, a one-to-one transformer with as near to that impedance level as possible is used to couple them. The primary must handle fifty mils mic. current.

It should be borne in mind that the output stage of this modulator draws fairly heavy current, and the power leads, relay contacts, ground connections, etc. should be of sufficient size.

I hope that this modulator will work for other builders as well as it does for me.

. . . KL7DLC

Very Short Article

Toroid Tip

A wafer octal socket makes a nice tie point strip if you are building a toroid core transformer for transistor power supplies. Just bend the solder lugs down and attach the leads from the windings. VE6WT

drawback the filter should be placed on the operating desk right at the key, where it will have an appreciable effect on the transmitter adjustment. Also, the C_2 capacity can be increased on certain transmitters with marked improvement — all the way from .006 μfd. up to 1 and even 2 μfd. Considerable arcing at the key contacts will result from the larger condenser, but this arcing will have no effect in a BCL receiver because it is blocked by the r.f. chokes. In some cases the larger type condenser works much better.

A Novel Class B Modulator

A Class B modulator using an ordinary power transformer for coupling between the modulator and Class C amplifier is being used successfully by W5ANB. The primary of the transformer is connected in series with the secondary, as shown in Fig. 3, thereby becoming an auto-transformer. This gives about the right impedance match,

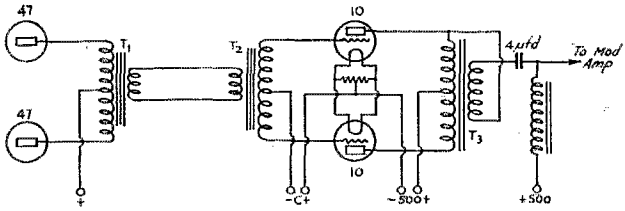

FIG. 3 — CLASS B MODULATOR WITH AUTO-TRANSFORMER COUPLING

T1 — Transformer designed for coupling a pair of Type 47 tubes to a 15-ohm load.
T2 — Transformer designed for coupling a pair of Type 45 tubes to a 15-ohm load.
T3 — Power transformer with center-tapped 1200-volt winding and 110-volt winding.

provided the transformer primary is poled correctly with respect to the secondary. The connections should be reversed when giving the system a trial to see which way gives the better audio power transfer. It is advisable to feed the modulated amplifier through a choke as shown in preference to running the Class C plate current through the coupling transformer because otherwise one side of the transformer will carry all the d.c. for the modulated amplifier and the system is likely to be thrown off balance.

The coupling between the driver stage and the modulator also is of interest because it utilizes transformers originally designed for a different use and offers the opportunity of using a transmission line between the driver and modulator.

A Neutralizing Kink

By H. B. Churchill, W2ZC

GENERALLY the greatest trouble experienced in high-power amplifiers after neutralization is from continual breakdown of the neutralizing condenser unless it is rated at twice the plate voltage or so. The following trick was hit upon at W2ZC and saved expensive neutralization condensers for the 500-watt stage and works beautifully.

The neutralizing condenser is connected to *preceding amplifier side* of the grid condenser, as shown in Fig. 4, instead of the old method of going directly to the grid. It is often common practice to run the last two stages from the same supply or at approximately the same voltage, and with this method the neutralizing condenser has no d.c. difference in potential across it. With the 852-204-A combination it is possible to use a neutralizing condenser of low breakdown voltage rating. With the old method such a combination required a 6000-volt neutralizing condenser at W2ZC to hold down the voltage.

As applied to smaller transmitters, for instance with a Type '10 feeding a 50-watter, this method is also a great saver. The 50-watter has 1000 volts on its neutralizing lead, while the '10 has perhaps 500 on its plate and the other side of the neutralizing condenser. Both these voltages are positive with respect to a common ground; hence the difference in potential across the neutralizing condenser is 1000–500, or 500 volts. A midget receiving condenser will do now instead of that big double-spaced affair.

Only one further consideration enters, and that can be quickly discounted. The grid coupling condenser is in series with the neutralizing condenser and therefore becomes part of the neutralizing capacity. If the grid condenser is the usual .002 or so, however, there will be very little effect on the setting of the neutralizing condenser (reciprocal sums, with large condenser in one fraction).

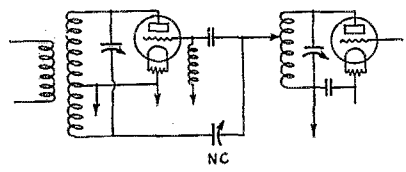

FIG. 4 — A NEUTRALIZING CIRCUIT WHICH MINIMIZES VOLTAGE BREAKDOWN

This has been a life-saver at W2ZC. For very high power as much as a 12,000-volt breakdown neutralizing condenser was needed at certain times. Now a very insignificant condenser sits serenely in the final stage and doesn't turn a hair.

'Phone Transmission With Voice-Controlled Carrier Power

A New Constant-Percentage System Using the Class-B Plate Modulator to Control Carrier Level

By G. W. Fyler, W2HLM*

Numerous schemes have been proposed, and some tried experimentally, for a system of 'phone transmission in which the carrier level is automatically maintained just sufficient to carry the modulation. Of the methods submitted previous to this time, however, none has combined simplicity, positiveness of action and sufficient tolerance to insure against improper modulation to the extent that they are combined in the system described by the author of this article. We have worked W2DC, who uses it, and vouch for its performance. Even this system is not one to be attempted slap-dash in any Class-B modulated 'phone transmitter, however. Close adherence to the design outlined and careful observance of the adjustment procedure specified are prime essentials. And of course no transmitter using the system should be put on the air by any experimenter until it has been thoroughly tested on a non-radiating dummy antenna. Properly used, this system of "squirt" modulation should be beneficial to amateur 'phone. But give it a fair trial.—EDITOR.

A VARIABLE r.f. carrier wave which would rise and fall according to the level of the audio modulation was first tried about five years ago in a 50-kw. broadcast transmitter. The carrier wave in a modulated transmitter usually has a constant average value (Fig. 1A) although it may increase (shift upward) with overmodulation or decrease slightly at high audio levels in a Class-B audio modulation system because of poor regulation of the high voltage plate supply.

Since the intelligibility is transmitted only by the side bands resulting from audio amplitude variations of the carrier wave, it should be possible to reduce the carrier wave to nearly zero when there is no modulation (Fig. 1B), and then let it rise and fall in accordance with the signal amplitude without changing the quantity or quality of the side bands transmitted. The received signal also should be theoretically unchanged with linear detector circuits.

The original circuit for obtaining the voice-controlled carrier was quite complicated in the way it was first applied experimentally to the WGY 50-kw. transmitter. One of the Class-B linear r.f. amplifiers, designated in Fig. 2 as the "Control Amplifier," was biased beyond the cut-off value for the tubes so as to reduce the carrier from the normal 50-kw. value to about 3 kw. for zero audio signal. The bias potential of this amplifier stage was then varied in accordance with the average value of the audio signal. The variable bias potential was obtained from a separate audio amplifier, rectifier and filter connected to the audio system. The rectifier supplied a pulsating voltage proportional to the audio signal, and the filter cut off all frequencies above 20 cycles, leaving only the syllabic variations of the audio signal—"syllabic variations" meaning the rise and fall of the audio signal at the rate of the occurrence of syllables in speech.

The first system, as described, was fairly successful; but there was question whether the controlled carrier system would introduce objectionable distortion in commercial practice.

THE CLASS-B CIRCUIT

Recently a new circuit has been developed which is much simpler in operation and which has little distortion. This circuit may be applied easily to many modern amateur 'phone transmitters using Class-B audio modulation in arrangements such as that shown in Fig. 3A. It will save one-half of the plate power to the modulator and p.a. and about one-quarter to one-third of the total input power, while reducing the heating in the final r.f. amplifier tubes and circuit and possibly permitting an increase of the output signal. By its use duplex operation should be made possible or at least be aided considerably, and less interference should be caused with other stations.

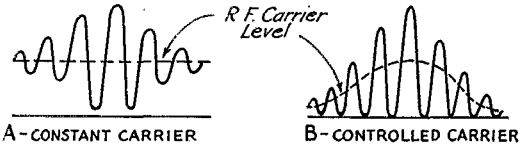

FIG. 1—CONTRASTING MODULATED WAVES OF THE CONSTANT-CARRIER TYPE (A) AND CONTROLLED-CARRIER TYPE (B)

* Radio Engineering Dept., General Electric Company, Schenectady, N. Y.

The transmitter circuit is shown in Fig. 3B. A Class-B audio modulator and a Class-C modulated amplifier have their plate circuits in series. The d.c. current in both plate circuits must then be the same and the rectifier must supply twice the voltage normally used.

The voltage applied to the p.a. depends upon the plate current drawn by the modulator and this, in turn, depends upon the amplitude of the audio signal. Another way of looking at it is to consider the total rectifier voltage dividing according to the resistance of the two circuits, the modulator and the p.a., with the p.a. plate circuit representing a constant resistance of E_p/I_p while the modulator plate circuit resistance is high with no signal and decreases when the audio signal increases. Hence, the p.a. plate voltage and the r.f. carrier output are low for no audio signal and both automatically increase with the audio signal. This is an improvement over the original circuit since no separate amplifier and rectifier are required for control.

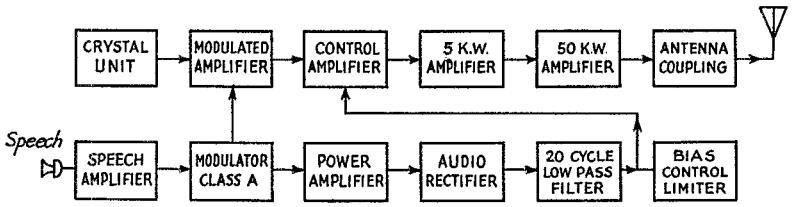

FIG. 2—BLOCK DIAGRAM OF THE EARLY CONTROLLED-CARRIER TRANSMITTER USED IN WGY EXPERIMENTS

Separate stages were used for the voice-operated control circuit.

Several basic requirements must be observed. The rectifier must have reasonably good regulation. High-mu or zero-bias tubes are necessary in the Class-B modulator for a low carrier with no audio signal. The modulator tube peak plate voltage under any degree of modulation will not be higher than in the usual system of modulation, although the d.c. voltage is increased above the normal operating point. A capacitor C_1 of between 4 and 10 μfd., rated for the full rectifier output voltage, is required connected as shown to by-pass the audio currents. This capacitance value may vary somewhat with different transmitters, although 4 μfd. will be generally satisfactory. If it is too small, audio distortion and spurious sidebands will result; and if too large, the rate of rise of the carrier will be limited so that overmodulation takes place before the r.f. carrier voltage becomes adequate.

The rectifier voltage can usually be doubled by changing the usual full-wave to a bridge-type rectifier (if one is not already used) requiring two more rectifier tubes and two additional filament windings; or the plate transformer can be changed. Two rectifiers of similar current rating might also be connected in series. Since the total d.c. load current to the modulator and p.a. is about half its former value, the filter reactor will be more effective and the filter capacity for the higher voltage need not be so large. It should be noted that the rectifier tubes have to supply only half the current and, therefore, smaller tubes might be used. However, since the load fluctuations are even greater than with ordinary Class-B modulators, it is essential that a bleeder or other fixed load be placed on the rectifier to hold down the voltage. It is also essential that choke input be used in the rectifier filter for good regulation.

The separate p.a. filament transformer must be insulated for the full d.c. plate voltage. The modulation transformer secondary is connected in the positive potential lead from the rectifier. Alternatively, this secondary might be connected into the series circuit at the point marked X (in the negative side) to minimize the voltage between windings in the modulation transformer. The results are the same either way as far as modulation is concerned, since the circuit is a series one.

Grid-leak bias is shown for the p.a., and this is a necessity unless battery or some other highly insulated bias voltage supply is available. The whole p.a. circuit is "above ground" for d.c. However, if the excitation should fail, the modulator tubes tend to limit the r.f. amplifier plate current to a safe value with grid-leak bias. The

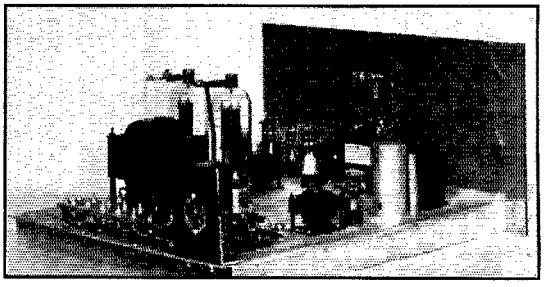

CLASS-B MODULATOR OF THE TYPE USED FOR CONTROLLED-CARRIER 'PHONE OPERATION AT W2DC

Either zero-bias G.E. FP-146's (shown) or 203-A's can be used in the Class-B stage. The speech amplifier (in the foreground) uses a 57 and a 56 resistance-coupled, exciting push-pull 2A3's in the driver stage. The small tube behind the 2A3's is another 56 used as an audio oscillator for test adjustments. The capacitor below the meter is the all-important audio-frequency filter condenser C_1 of Fig. 3B.

grid excitation circuit may be either inductively or capacitively coupled, but sufficient insulation must be provided for bias and plate voltage.

ADJUSTMENT PROCEDURE

In the practical operation of the circuit it is a good plan to start with the normal transmitter (connected as in Fig. 3A) adjusted as follows: The r.f. load coupling should be such that the p.a. plate current approximately equals the modulator plate current under 100% modulation conditions with a common plate power supply. This indicates about 50% overall plate efficiency in the modulator, which is reasonable considering losses in most modulation transformers. When the circuit is changed for controlled carrier operation (Fig. 3B) the normal carrier will then be correct for 100% modulation. For example, if the input to the p.a. is 1000 volts and 300 ma. (300 watts), 150 watts of audio power are required for 100% modulation. If the modulator plate voltage is 1000 volts, the d.c. plate current to the modulator will depend upon the efficiency of the tubes and the modulation transformer. If this efficiency is 50% for 100% modulation, the input power to the modulator will be equal to that of the p.a. and the plate current will be the same.

If the modulator plate current is normally appreciably less than the p.a. plate current for 100% modulation, a resistor R_1 should be added in parallel with the modulator audio filter capacitor C_1 to balance the currents at 100% modulation, so that overmodulation will not result. As a further aid to prevent overmodulation, a resistor R_2, of some such value as 10,000 ohms, can be connected across the primary of the Class-B output transformer. The residual plate current through the Class-B modulator allows a certain amount of carrier which will prevent overmodulation on the first part of a spoken syllable. Oscillograms taken with ordinary voice and music show that practically no overmodulation will take place if the set is properly adjusted and that the carrier wave will be fully modulated at all audio signal levels except the very lowest.

The circuit as described is particularly adaptable immediately when 46 or similar high-mu modulator tubes are used with 801 r.f. amplifier tubes. In the 50-watt class, the modulators should be 203-A or higher-mu tubes.

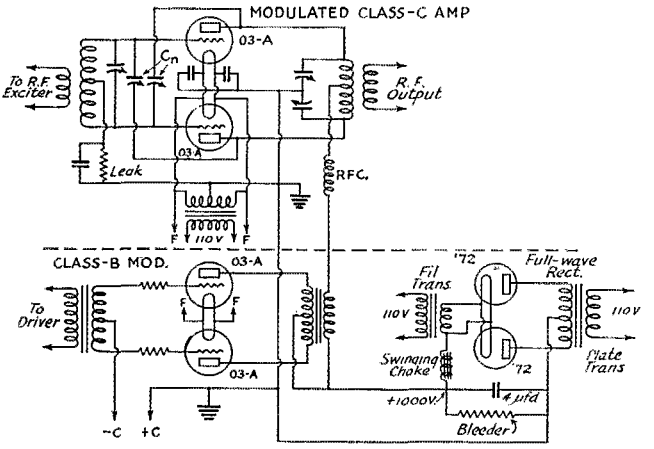

FIG. 3A—CIRCUIT OF THE CLASS-B MODULATION SYSTEM FOR NORMAL CONSTANT-CARRIER TRANSMISSION
Circuit values are usual.

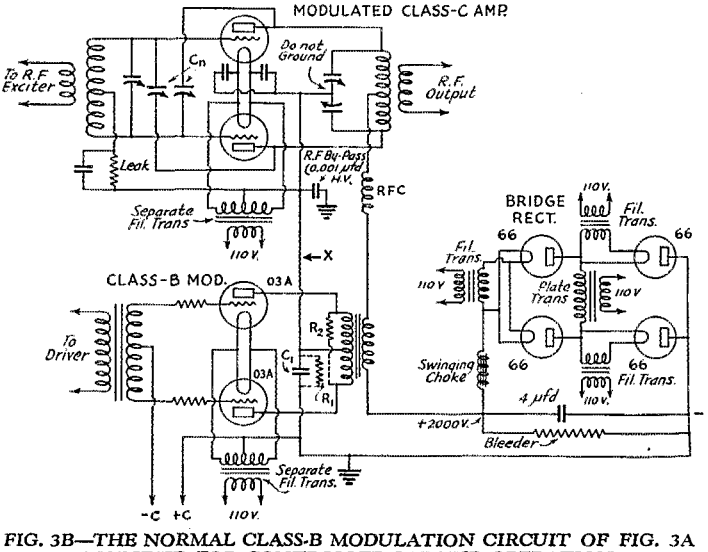

FIG. 3B—THE NORMAL CLASS-B MODULATION CIRCUIT OF FIG. 3A MODIFIED FOR CONTROLLED-CARRIER OPERATION
Details are given in the text.

PRACTICAL AMATEUR 'PHONE TESTS

W2DC, owned by Mr. E. H. Fritschel at Scotia, N. Y., near Schenectady, has been changed over to use this controlled carrier system. Of some twenty stations worked on 20 and 80 meters, only

two questioned why the carrier increased with modulation. Both of these stations apparently had tuning meters in their receivers. All stations worked reported the quality to be excellent. There are two high-mu 50-watt tubes in the modulator and two 211's in the p.a. The rectifier supplies about 1800 volts to the modulator and p.a.

Critical listening tests were also made on W2DC in Schenectady with a GE-K80 all-wave receiver having automatic gain control and with an FBXA receiver with manual volume control. The quality appeared satisfactory on both.

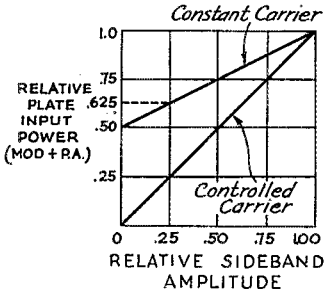

FIG. 4—POWER CONSIDERATIONS COMPARED FOR CONSTANT-CARRIER AND CONTROLLED-CARRIER-SYSTEMS

The ratio of maximum to minimum carrier has been made as high as 200/1 at W2DC by adding a small amount of extra negative bias to the modulators to reduce further the plate current and therefore the carrier level. With a 200-watt normal carrier, the carrier was reduced to one watt or less when unmodulated. With this ratio, however, there was some distortion, the modulation sounding slightly accented on the start of a spoken word, particularly with a receiver using automatic gain control. At this low unmodulated carrier level, it was found that a neon lamp could not be lighted on the transmission line, and it was necessary to whistle into the microphone to check the p.a. tuning.

POWER SAVING AND OTHER FEATURES

The voice-controlled carrier with Class-B plate modulation offers many advantages for amateur work. About half of the plate input power to the modulator and modulated amplifier can be saved, as shown by Fig. 4.

It is assumed that the modulator draws as much power as the p.a. under 100% modulation conditions in either system for the same carrier power output. With constant carrier the input power then reduces to about half at zero modulation. With the ultimate case of controlled carrier the input power is zero and the carrier output is zero at zero modulation. The power input then varies nearly linearly with modulation. If we assume an average relative modulation of 25% during the time the power is on, the power used in the first case is 62.5% of the maximum and in the second case it is 25%. The controlled carrier then saves 60% of the power. Considering the various assumptions made, it seems reasonable to conclude that at least 50% or half of the plate power is saved. It should be noticed that for average modulation of less than 25%, an even greater amount of power is saved.

The system as described will reduce QRM to other stations on nearly the same frequency because the beat note between carriers is greatly reduced in amplitude for a large part of the time. Also, if a nearby station is being worked, *the operator has a very convenient means of reducing r.f. output (as required by law) by simply talking farther away from the microphone or by reducing the volume control setting.*

The possibilities of duplex operation are good with the voice-controlled carrier circuit. If the excitation stages of the transmitter are well shielded and the power leads are by-passed at the shields, the signal in the receiver from the transmitter can be reduced considerably. This will cause little interference to the receiver if the latter is carefully installed with a remote antenna and transposed or shielded feeders. A wave trap or a highly selective input circuit may be added to the receiver; and if some real experimenting is enjoyed, a neutralizing voltage of the proper phase and amplitude can be applied to the receiver.[1] All of these factors should help in perfecting duplex operation with controlled carrier transmitters on the 160-, 80- and, possibly, the 20-meter 'phone bands.

While the description covers briefly a few of the technical angles of voice-controlled carrier, this does not mean that the circuit requires complicated adjustments for good results. An effort has been made to describe the general features of the circuit so that it may be applied to the most common types of transmitters using Class-B audio modulation.

EDITOR'S NOTE: *Constructional details of the controlled-carrier 'phone system applied to the smaller amateur transmitter will appear in an early issue.*

[1] See W8ZC's article in this issue.—EDITOR.

Strays

Hr news: Irving Vermilya, "Amateur No. 1," VN of 1HAA and 1ZE, has been bitten by that little bug again. Yessir, old 1ZE is coming back. (That is, if he has succeeded in passing his amateur exam!) Hundred watts of push-pull xtal, plus 5-meter gear on a 120-ft. tower. Wrote us the other day wanting to know how long the feeders can be for 56 mc., and lots of easy little questions like that. Welcome back home, VN.

HAM NEWS

Copyright, 1960, by General Electric Company

JANUARY-FEBRUARY, 1960

OPERATING G-E HI-FI TUBES AS MODULATORS

By P. E. Hatfield, W9GFS, and R. E. Moe*

The High Fidelity audio equipment boom has spurred development of several new tube types—and improvements in existing types—for audio power amplifier service. Thus, amateurs now have a broad choice of highly efficient tubes for plate modulator service in their transmitters.

The new audio tubes shown at the right are the G-E Receiving Tube Department's new family of high-performance power pentodes designed for both monophonic and stereo high fidelity audio equipment. Keeping pace with the trend to the "pancake" shape in audio equipment, these tubes pack more power capability into compact envelopes than ever before.

A newly developed five-ply bonded plate material (see cross-sectional drawing, Fig. 1), permitted upping the plate dissipation in the 6L6-GC to 30 watts, as compared to 24 watts in the 6L6-GB and older versions. A dramatic demonstration of this new plate material's capability can be seen in the photo showing a 6L6-GB and a 6L6-GC, running side-by-side with each plate dissipating 80 watts! Note the "hot spots" — actually a bright orange in color — on the 6L6-GB plate at left. The new five-ply plate in the 6L6-GC at right is uniformly heated to a dull red color (although it appears black).

The new 7581 beam pentode — electrically similar to the 6L6-GC, but with a low-loss mica-filled base — has the five-ply plate too. Another new pentode with the five-ply plate, the 7355 for audio amplifiers in the 20-30 watt power range, packs 18 watts of plate dissipation into an envelope having a seated height of only 3 inches. The 7189A miniature pentode also has a plate made of the five-ply material.

The 6BQ5 and 7189A pentodes — plus the new 6DZ7 twin pentode, which is equivalent to two 6BQ5's in one envelope — round out

(continued on page 7)



COMPARISON of plate size in the new 7355 octal beam pentode (left), and the 7189A miniature beam pentode (right). The tubes have design maximum plate dissipation ratings of 18 and 13.2 watts, respectively.

Also in this issue—

Scanning the Spectrum.....page 2
All-Band Balun Coil.....page 3
Simplified Coil Design.....page 4
Feedline Test for Transmitter Parasitics.....page 8

—Lighthouse Larry

NEW G-E 7581 beam pentode with low-loss base, and the 6DZ7 twin beam pentode (right). Both the 7581 and the 6DZ7 are only $3\frac{5}{16}$ inches in height when seated in sockets.

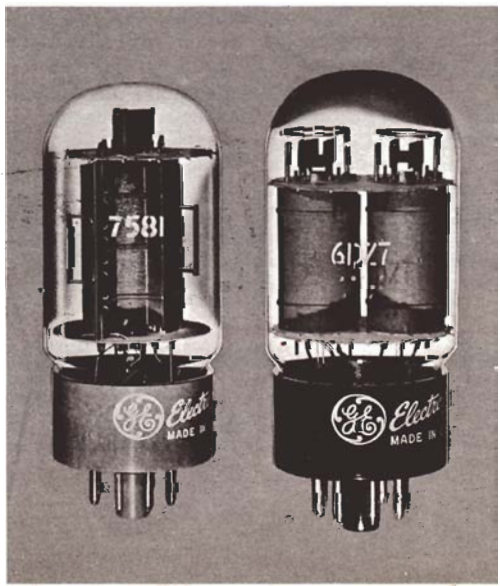

OPERATING G-E HI-FI TUBES AS MODULATORS

(continued from page 1)

this hi-fi tube family. These tubes normally are rated in the technical data for push-pull class AB_1 operation at low harmonic distortion — about 2 percent — in high fidelity amplifier service. These ratings are given in the "Hi-Fi Service" columns in Table I.

Plate modulator service in amateur transmitters, however, usually permits the audio power tubes to be operated with higher distortion — up to about 10 percent — in the output. This allows the modulator tubes to be driven harder — up to the maximum ratings — with a resultant 25 to 90-percent increase in power output, depending on tube type.

A session with the "OPERATION CHARACTERISTICS" curves on the *DESCRIPTION AND RATING* sheets for these tubes resulted in the figures listed in the "Modulator Service" columns in Table I. These operating conditions are all within the "MAXIMUM RATINGS" listings for each tube type. A typical class AB_1 amplifier circuit is used to obtain this data.

A 24-watt modulator with a single tube output stage can be built around a 6DZ7 twin pentode, operated with 400 volts on the plates. Or, a pair of 6BQ5's can be substituted if desired. For high power output at a moderate 400 plate volts, a pair of 7355's will deliver 54 watts of audio power. These figures do not include output transformer losses.

Plan your new plate modulator around the above tubes. As makers of high fidelity equipment can verify, they really deliver the watts, and with low distortion too.

*W9GFS is an engineer in the Technical Data Unit, and R. E. Moe is the Manager of Engineering in General Electric's Receiving Tube Department, Owensboro, Ky.

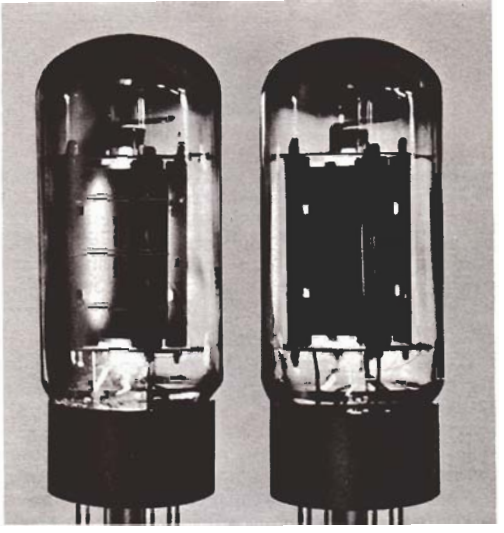

UNRETOUCHED PHOTO showing a 6L6-GB (left) and a new 6L6-GC (right) with five-ply bonded plate material, each operating at a plate dissipation of 80 watts. The 6L6-GB has "hot spots" on the plate, bright orange in color, while the plate of the 6L6-GC shows only a uniform dull red, due to the superior heat dissipating characteristics of the new material.

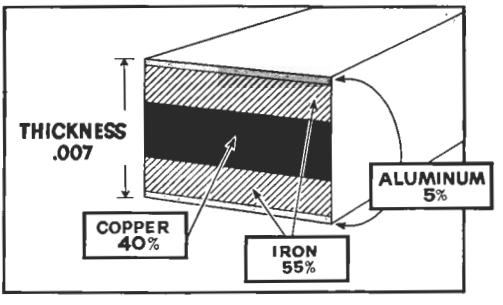

FIG. 1. CROSS-SECTIONAL VIEW of G. E.'s new five-ply bonded plate material. The metal "sandwich" gives better heat conduction and radiation than conventional single-layer anode materials.

TABLE I — COMPARISON OF HI-FI AND MODULATOR SERVICE

PUSH-PULL CLASS AB_1 AMPLIFIER, VALUES FOR TWO TUBES

TUBE TYPE	1 — 6DZ7 2 — 6BQ5 2 — 7189A		2 — 6L6-GC 2 — 7581		2 — 7355		
	Hi-Fi Rating	Mod. Rating	Hi-Fi Rating	Mod. Rating	Hi-Fi Rating	Mod. Rating	
Plate Voltage	400	400	450	450	300	400	Volts
Screen Voltage	250	250	400	400	250	300	Volts
Grid-Number 1 Voltage	—11	—11	—37	—37	—21	—32	Volts
Peak AF Grid-Number 1 Voltage	22	26.4	70	85	42	70	Volts
Zero-Signal Plate Current	80	80	116	116	100	72	Milliamperes
Maximum-Signal Plate Current	100	110	210	240	185	244	Milliamperes
Zero-Signal Screen Current	4.0	4.0	5.6	5.6	5.5	4.6	Milliamperes
Maximum-Signal Screen Current	13	16	22	30	24	30.4	Milliamperes
Effective Load Resistance, Plate-to-Plate	9000	9000	5600	5600	4000	3500	Ohms
Total Harmonic Distortion[1]	2.5	5	1.8	7	2.0	5.8	Percent
Maximum-Signal Power Output[2]	18	24	55	70	28.5	54	Watts

[1]Without feedback.
[2]Power output figures quoted do not include losses in output transformers usually encountered in practical circuits.

MODULATOR FOR RAYTHEON RA-250 BROADCAST TRANSMITTER (250W CARRIER)

self bias resistor for 6B4's filament CT to GND = 390 Ohms 20W

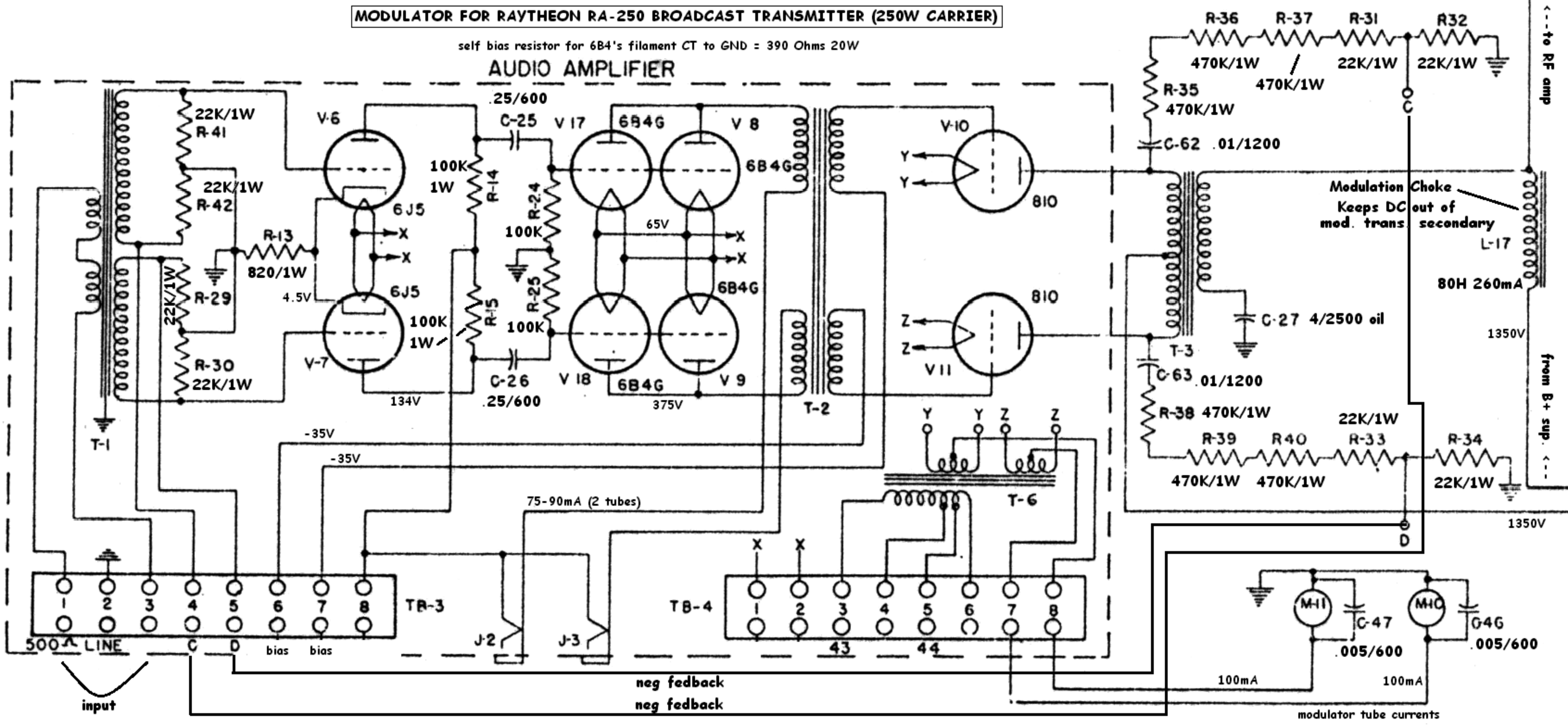

Modulator Drivers and Speech Amplifiers

This section concers the equipment that may be used to drive powerful modulators and includes information on the circuitry between the microphone connector and the modulator grids. For small transmitters, these can also be used as the modulator.

If the modulator is Class AB1, no grid current or drive power is necessary other than to make up for small circuit losses. Any sort of driver can be used that makes enough peak to peak grid voltage. If the modulator is never going to draw grid current, RC coupling from the driver can be used. Typical modulator tubes for AB1 may be 6L6, 813, 4-250, 4-400, depending on circuit power and voltage.

If the modulator tubes are capable of being operated in Class AB2, it is wise, to have the speech amp be able to deliver more than necessary power so that occasional peaks do not cause clipping of the grid voltage when driver above zero volts. A non-inductive resistor can be placed across the driver transformer secondary to give the speech amp a suitable load while grid current is not being drawn. For AB2 capability, size the speech amp to deliver at least twice the amount of power necessary for the modulator tubes. The same tubes apply.

Many people prefer to use triodes for the drivers of Class-B modulators because they present a lower impedance source from which to drive low impedance, current-hungry modulator grids. The same can go for AB2 operation, determined by checking the modulator tube data.

It is possible to use tetrodes and beam power tubes as drivers for class B modulators provided the circuit provides a low impedance (audio folks call it a high damping factor).

Zero-bias modulator tubes like the 811A, 572B, and 3-500Z need a very well regulated low impedance drive source. For any of the modulators, it is worthwhile to consider a cathode follower as the modulator grid driver where widely variable grid current is indicated.

Negative feedback applied to a speech amplifier is one way to be sure its output voltage to the modulator grids faithfully follows the amp's input voltage. Obviously any deviation from this relationship is distortion that will be further amplified by the modulator and put on your carrier and therefore should be reduced as much as possible.

In order that there should be good regulation of the drive, the speech amplifier ought to be rated for two to three times the power required, plus whatever amount may be lost in the driver transformer, plus losses caused by any mismatches between the driver plates and modulator grids.

More is better. The wisdom of using excess speech amp power capability to overcome possible mismatches comes into play as the amateur experiments with different modulator tubes, and is illustrated by the fact that some modulator tube grids may present a 4000-5000 Ohm grid to grid (tubes that require bias) load while others may present a 2000-2500 Ohm load (tubes that run zero bias), perhaps taking half the voltage but twice the grid current. A comparison of this is the old 304 tube vs. the newer 3-500Z. Furthermore, the "special class B connection" (G2 used as grids and G1 being connected to same via 20K resistor) popular with certain tetrode or beam tubes is a high voltage drive circuit and gives a grid to grid impedance of as much as 12000 Ohms.

There are as many combinations of tubes and transformers for this as can be imagined. A good thing for the experimenter. These words aside, you can't go wrong with the articles in this section as long as power and fidelity requirements are observed. The speech amplifier power stage, like the modulator, is not the place to limit the performance. That is best done by the equalization and speech processing in low-level stages.

for the EXPERIMENTER



Driver for Class-B 203-A's

Although the design of a speech amplifier suitable for driving successfully a pair of 203-A's as Class-B modulators would seem simple using Type 50 tubes, the complexities of the job multiply with the use of the newer and far superior (when used properly) 2A3 tubes. At W9JHY a satisfactory solution was achieved as outlined below.

In laying out the tube lineup a 57 was decided upon as the input stage tube, since it has high gain and good audio properties. This is fed into a 56 by means of any good screen-grid coupling transformer. I used an Amertran No. 641 choke with a 0.1-μfd. coupling condenser. In the grid circuit of the 57, as the main volume control, I used a 100,000-ohm potentiometer, and isolated the grid circuit with resistances, as shown in July, 1932, *QST*.

The output of the 57 is entirely too much for the grid of a 56 tube. However, no very satisfactory way of feeding the output of a single-ended stage using a 57 to push-pull grids is available, since ordinary transformers don't "perk," and coupling transformers of that type are costly. So I used another potentiometer in the grid circuit of the 56 to control the amount of excitation to the point just below distortion.

The third stage is a pair of 56's coupled to the first 56 by a low-gain transformer (Thordarson No. 2408). The output inter-stage push-pull transformer is a type 5870 Thordarson job of low ratio, capable of transferring the power necessary to drive the grids of the 2A3's. This is more of an essential than most of the boys think, for the 2A3 tubes are operated Class AB and the grids swing positive, much as in a Class-B rig, but the plate current doesn't change as much.

The 2A3 tubes may be operated with automatic bias, but there just isn't any way to keep the bias from fluctuating with the plate current. For this reason, I decided upon battery bias, by-passing the battery with a 24-μfd. electrolytic condenser.

I have tried just about every kind of Class-B input transformer made, but was unable to find one with a low enough plate-to-plate impedance for the 2A3 tubes. Hence, I asked Thordarson to make up one with a 3000-ohm primary impedance, and with two separate windings on the secondary, instead of the usual single, center-tapped grid

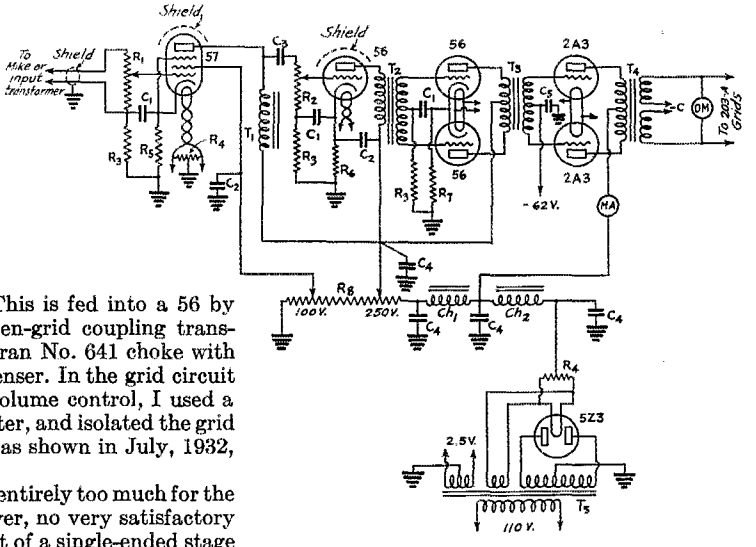

FIG. 1—SPEECH AMPLIFIER AND DRIVER FOR CLASS-B 203-A'S

T_1—300- to 500-henry audio choke.
T_2—Push-pull input transformer.
T_3—Push-pull interstage transformer (see text).
T_4—Class-B input transformer, 3000-ohm primary, push-pull 2A3's to 203-A grids.
T_5—Plate-filament transformer, approx. 350 volts each side center tap; 5-volt and 2.5-volt filament windings (Thordarson T-5822).
R_1—100,000-ohm potentiometer.
R_2—50,000-ohm potentiometer.
R_3—50,000 ohms, 1 watt.
R_4—40-ohm center-tapped resistor.
R_5—1500 ohms, 2 watt.
R_6—2000 ohms, 2 watt.
R_7—1000 ohms, 2 watt.
R_8—20,000-ohm voltage divider, 20 watts.
C_1—4 μfd.
C_2—2 μfd.
C_3—0.1 μfd., 500-volt rating.
C_4—8-μfd. electrolytic.
C_5—24-μfd. electrolytic.
Ch_1—30-henry, 85-ma. choke.
Ch_2—30-henry, 200-ma. choke.
MA—0-200 d.c. milliammeter.
OM—Output meter, 0-200 rectifier-type a.c. voltmeter 1000 ohms per volt.

winding.[1] Average 203-A's just don't have similar characteristics, but with separate transformer secondaries the bias on each tube can be adjusted

[1] Type number T6140.

to make the distortion percentage as low as possible. Usually it takes about 3 or 4 volts more or less for one of the 203-A's than for the other, and a single "C" bias battery can be used instead of the two, one in each grid leak, required by a single center-tapped winding.

This unit is quiet in operation. The hum level is 1/30 volt, which you can't find with the average ear. In order to accomplish this, it was necessary to move the microphone transformer and microphone circuits to another unit, about 3 feet away from the chassis, since inductive pick-up upset the apple-cart with the high gain available.

If the speech amplifier is used near a 400-watt transmitter, it is necessary to shield both the 57 and the first 56. However, if the r.f. is not too near, it can sometimes be operated successfully without a shield on the 56.

The shield can is No. 16 gauge galvanized iron. This is heavy enough to be of some value in shielding the amplifier from an a.c. receiver left running while transmitting. Considerable trouble was experienced with the first chassis used, of 26 gauge iron. Magnetic hum was picked up from the power transformer in the receiver, and the iron wasn't so hot as r.f. shielding. The galvanizing helps a lot in keeping out stray r.f., having a much lower resistance than iron.

A 5Z3 rectifier was chosen because of its much quieter operation as compared with a Type 83 tube. An 83 was tried, but there was some tunable hum in the receiver, when the speech amplifier was left on while receiving, and in order to save the trouble of rigging up a tunable hum filter, the 5Z3 seemed the best answer. It is a great tube for such a rig.

A choke of good proportions should be used as the first filter choke. The same rules that are in vogue for Class-B circuits hold true, and without a choke capable of handling about 150 mils without dropping below 30 healthy henrys, the quality will not be so very hot.

As to frequency response, the output dropped off 3 db below 60 cycles, and increased about 3 or 4 db about 8000 cycles. So, for the ham transmitter, it gives uniform output at any frequency encountered by ham 'phones. As a thought there, the average ham mike won't give any better response, if as good, so it won't hurt if the response isn't any better. By spending a week or two on it, the response curve can be made to go as high as 10,000 and as low as 30 cycles, utilizing various schemes, but this is a lot of expense for nothing, in my estimation.

The adjustment of the potentiometer in the grid of the first 56 is rather critical, but once set may be left alone. In my amplifier, it is "below deck," out of sight.

The output meter shown in the circuit is not essential, but is useful in indicating the level at which the rig is being modulated. It need not be calibrated, but if it can be calibrated in either volts or db, so much the better. The plate meter in the 2A3 plate circuit is necessary for setting the bias properly. The tubes should draw about 78 or 80 mils, no signal, and the current should swing up to about 140 to 150 on the peaks. The plate voltage is 300 and the bias—62 volts.

I believe that this is one of the easiest to build, least costly—considering the gain available—and most fool-proof amplifiers suitable for driving 203-A's as Class-B modulators.

—*M. C. Bartlett, W9JHY*

A Novel Regenerative Receiver

The 2A7 tube has been put to work in a somewhat different way by Rudolph C. Couppez, of 187-A Rue de la Victorie, Brussels, Belgium, in the circuit of Fig. 2. Although resembling in some respects the usual pentagrid converter circuit, actually the tube is used as a combined regenera-

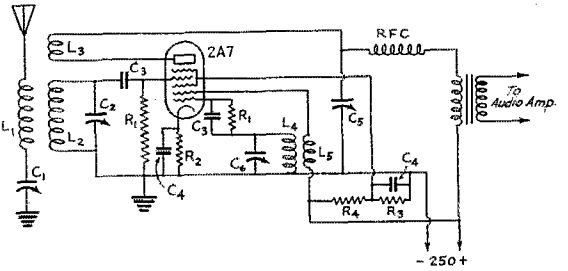

FIG. 2—HETERODYNE REGENERATIVE CIRCUIT USING A 2A7 TUBE

L_1, L_2, L_3, L_4, L_5—See text for details. L_1, L_2 and L_4 are identical for any given frequency range; ditto L_3 and L_5. Coupling between L_1 and L_2 should be variable.
C_1—500-μμfd. variable condenser.
C_2—See text. May be ordinary midget for short-wave reception only.
C_3—250 μμfd.
C_4—0.1 μfd.
C_5—500-μμfd. variable condenser.
C_6—Same as C_2.
R_1—5 megohms.
R_2—300 ohms.
R_3, R_4—50,000 ohms.
RFC—Depends upon frequency band to be covered. For short-wave reception only, any good short-wave choke will be satisfactory. For all-wave work, two or three chokes in series, each designed to cover a part of the spectrum, should be used.

tive detector and beat oscillator, using the screen-grid section of the tube as the detector. It is said to work well on all frequencies between 10 and 28,000 kc., using coils and condensers of suitable constants.

The tuned circuits in the oscillator and detector portions are made exactly similar since they have to cover the same frequency ranges. Constants here will not differ from those characteristic of other short-wave regenerative receivers. To cover

Considerations in Speech-Amplifier Design

Practical Pointers on Building High-Gain Amplifiers

By R. O. Lund,* W9SGA, and W. C. Howe,** W9UVP

THE requirements for a speech amplifier for the amateur transmitter are changing rapidly as new equipment is perfected. The modern speech amplifier must operate entirely from the power lines. To accommodate the justly popular crystal microphone, it must have high gain but the hum level must be low. It should be possible to realize the rated power output with a negligible amount of distortion.

In the design of any speech amplifier, before determining tube types and circuits, it is necessary to set down the performance to be obtained and the mechanical characteristics desired. In the amplifier herein described, it was decided the output power should be 18 watts, since experience had proven that this amount of power was sufficient for driving any Class-B stage up to and including 203A's. At the input circuit, we wanted provision for crystal or carbon microphone, phone pickup and output of a receiver. Speaker field current seemed desirable for occasional public address work. Since one of us required rack and panel mounting and the other table mounting, we compromised on a mechanical design suitable

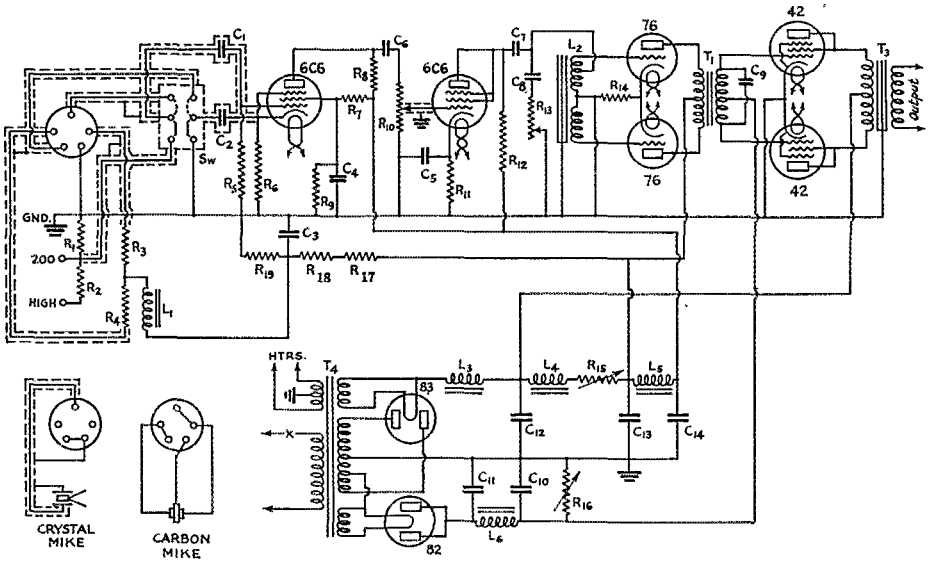

FIG. 1—COMPLETE CIRCUIT OF THE AMPLIFIER DISCUSSED IN THE TEXT

This general-purpose unit, with its audio output of 18 watts and high overall gain, is capable of driving a high-power Class-B modulator or can be used for public-address work.

C_1—0.1-μfd. 400-volt metal-cased.
C_2, C_3—25-μfd. 25-volt electrolytic.
C_4—8-μfd. 200-volt electrolytic.
C_5—25-μfd. 25-volt electrolytic.
C_6, C_7—0.1-μfd. 400-volt tubular.
C_8—.003-μfd. 400-volt tubular.
C_9—.001-μfd. 600-volt tubular.
C_{10}, C_{11}—8-μfd. 200-volt electrolytic.
C_{12}, C_{13}, C_{14}—8-μfd. 450-volt electrolytic.
R_1—200 ohms, 1-watt.
R_2—10,000 ohms, 1-watt.
R_3, R_4—200 ohms, 1-watt.
R_5—5 megohms, 1-watt.
R_6—2200 ohms, 1-watt.
R_7—0.1 megohm, 1-watt.
R_8—0.25 megohm, 1-watt.
R_9—20,000 ohms, 1-watt.
R_{10}—0.25-megohm volume control.
R_{11}—2200 ohms, 1-watt.
R_{12}—50,000 ohms, 1-watt.
R_{13}—0.25-megohm variable (tone control).
Important—The power supply components shown in this list will furnish 25 watts of field power for dynamic speakers. In case no speakers are used, a 5000-ohm, 50-watt resistor must be connected across the high-voltage output.
R_{14}—1500 ohms, 1-watt.
R_{15}—10,000-ohm semi-variable, 30-watt.
R_{16}—1500-ohm semi-variable, 30-watt.
R_{17}, R_{18}—5000 ohms, 10-watt.
R_{19}—1250 ohms, 1-watt.
L_1—7.2 henrys, 120 ma. (Thordarson T-5319).
L_2—Push-pull input transformer connected as described in text (Thordarson T-7431).
L_3—10-30 henry swinging choke, 150 ma. (Thordarson T-7429).
L_4—22 henrys, 35 ma. (Thordarson T-1892).
L_5—42 henrys, 15 ma. (Thordarson T-7430).
L_6—7.2 henrys, 120 ma. (Thordarson T-7549).
T_1—Push-pull input transformer, 800-ohm secondary, ratio 1.5 to 1, total primary to total secondary (Thordarson T-7432).
T_2—Power transformer, 450 volts at 150 ma. with tap at 75 volts, 6.3-volt, 5-volt and 2.5-volt filament windings (Thordarson T-7428).
T_3—Output transformer, depending on load to which amplifier is to be coupled.

*2517 Thayer St., Evanston, Ill.
**6639 Kenwood Ave., Chicago, Ill.

for either use. Our financial status was no different than that of 99.44% of all hams, so cost was a prime consideration.

OUTPUT STAGE—GRID REQUIREMENTS

It was first determined to use 42's in Class-AB in the output stage. These tubes are capable of the required output, and since the current is low, filament wiring would be simplified. Six-volt tubes could also be used in the voltage amplifying stages, resulting in quieter operation and lower hum level than for the lower voltage tubes. As an additional feature, the amplifier could be switched to battery operation if desirable. Class-AB operation makes possible high efficiency with low plate voltage, which is very desirable from a cost standpoint.

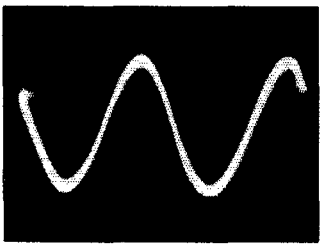

FIG. 2—OSCILLOGRAM OF OUTPUT WAVE-SHAPE WITH AMPLIFIER DELIVERING FIVE WATTS

The operation is purely Class A, no grid current being drawn.

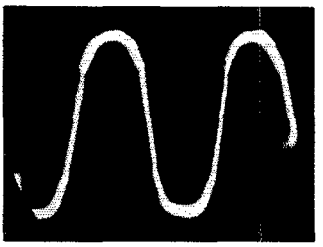

FIG. 3—WAVE-SHAPE AT EIGHTEEN WATTS OUTPUT

The slight irregularity near the peak of the wave marks the beginning of grid current flow. The distortion is not apparent to the ear.

A breadboard setup of the final stage was made, and the grid voltage required for 18 watts output measured by applying a voltage from the power line. This was found to be 55 volts r.m.s. per grid, or 110 volts total. With this figure established, we next went to the driver stage.

Most tube manuals recommend the use of a single 42, triode connected, to drive two more of the same type tube. With the 42-tube triode connected, the μ is 6.2 and the power output is given as 0.65 watt. However, the Type 76 tube has a μ of 13.8 and computation showed that a pair of them in push-pull would deliver better than a watt. In addition, the plate current for the 76's is 21 ma. less than for the single 42. The fact that a push-pull circuit practically eliminates the even-order harmonics made the vote unanimous. The wisdom of this choice is clearly demonstrated by oscillograms given later in this article.

Best performance of a Class-B or AB push-pull driver stage is obtained with a plate-to-plate load approximately eight times the plate resistance of one of the tubes. In the case of the 76, the load would be 8 × 9500 ohms, or 76,000 ohms. The grid impedance of a 42 working Class-AB at maximum output is approximately 8550 ohms. The turns ratio of primary to one-half secondary of the driver transformer for this impedance ratio would then be

$$\sqrt{\frac{76{,}000}{8{,}550}} = 3$$

or the overall ratio would be 1½ to 1 stepdown. With this step-down ratio, 165 volts must be generated across the primary to drive each of the grids to 55 volts r.m.s. The actual gain of a 76 tube in this type of circuit is about 9, so that 18.4 volts r.m.s. are required from grid to grid of the 76's to reach this level, or 9.2 volts per tube. In accordance with the tube charts, the 76's should be biased to 13.5 volts. The *peak* voltage of a sine wave having an amplitude of 9.2 volts r.m.s. would be 1.4 times this, or 13 volts. This is less than the bias voltage, so the 76 stage will operate purely Class-A under these conditions. If the peak voltage were higher than the bias, it would be necessary to decrease the step-down ratio of the driver transformer, so the required voltage on the grids of 42's could be obtained with a peak voltage on the driver tubes of less than the bias voltage. The reflected load on the driver stage would then be lower, causing an increase in distortion.

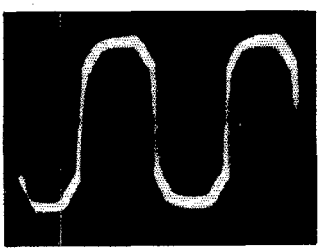

FIG. 4—EFFECT OF EXCESSIVE INPUT TRANSFORMER RESISTANCE

Power output and operating conditions same as in Fig. 3 except that an input transformer having a secondary resistance of 3655 ohms per side was used. To the ear the quality is "fuzzy."

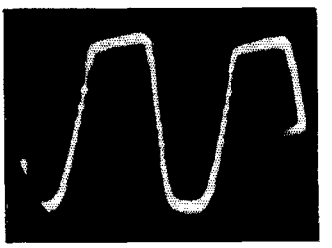

FIG. 5—A SINGLE-ENDED DRIVER STAGE GAVE THIS OSCILLOGRAM

The non-symmetrical shape of the wave results from core saturation effects, as explained in the text. Quality harsh and unpleasant.

To check the calculations, the driver and power stages were set up and the grids of the 76's excited to just below the grid current point, at which the output of the power stage was 18

watts, showing that the driver tubes and transformer were operating under optimum conditions.

VOLTAGE AMPLIFIERS

From this point we are interested only in voltage amplification since all tubes up to the output stage are operated Class-A. Since the crystal microphone has the lowest output of any of the devices intended to be used, the gain had to be made high enough for the crystal microphone and the signal from other devices attenuated to approximately the same level. One crystal microphone manufacturer specifies an output voltage of 0.008 across a 5-megohm resistor. This measurement was taken with a single frequency tone source close to the microphone, so we decided to use just half this value so the amplifier would have sufficient sensitivity for a low speaking voice. To amplify the 0.004 volts out of the microphone to the 18.4 volts required across the grids of the 76's would mean a voltage gain of 4600. It was almost imperative to secure this gain from two audio stages, since more stages usually introduce almost insolvable problems of oscillation, hum, tube noise and other kindred ailments.

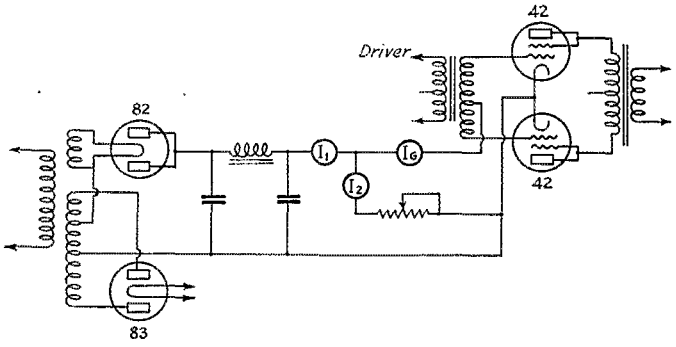

FIG. 7—IMPROVED CIRCUIT FOR GRID-BIAS SUPPLY

Utilizing a tap giving the proper bias voltage permits the use of a low-resistance bleeder to improve voltage regulation, without causing transformer overload. Data given in Table II.

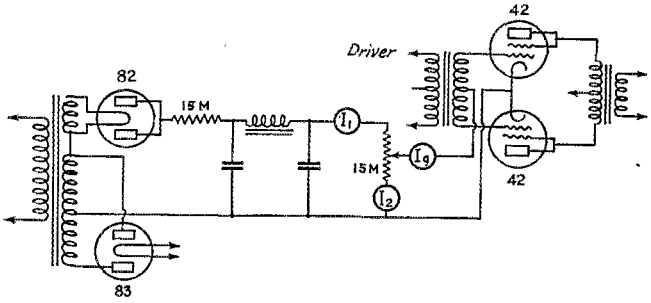

FIG. 6—THE CONVENTIONAL FIXED-BIAS CIRCUIT, UTILIZING A SEPARATE RECTIFIER-FILTER WORKING FROM ONE SIDE OF THE HIGH-VOLTAGE WINDING OF THE POWER TRANSFORMER

See Table I for data on bias voltage regulation resulting from grid-current flow.

A Type 6C6 was chosen for the first voltage amplifier tube, since it is possible to realize a gain of 90 with this tube pentode-connected. Because of the high plate impedance, resistance coupling is the most economical method for good frequency response. The gain of 90 would give us a signal voltage of 0.36 at the grid of the second amplifier stage, which still had to be amplified 51 times fully to excite the 76 drivers. Since the drivers are in push-pull it is logical to use transformer coupling into that stage. For good frequency response the plate impedance of the tube working into the primary of the push-pull input transformer should be reasonably low. A 76 would be satisfactory if the gain were higher, but the input transformer ratio would have to be 6 to 1 step-up to secure the gain of 51 required in the tube and transformer, and the frequency response of such a transformer would be poor. However, a 6C6 triode-connected (screen and suppressor tied to plate) has a μ of 22.5 and a plate resistance of 10,000 ohms. A gain of 14 is relatively easy to secure from the tube, and with a 4 to 1 step-up ratio in the input transformer the drivers can be excited with some to spare.

To secure the best frequency response, the plate of the 6C6 triode was parallel fed through a 50,000-ohm resistor, with a condenser blocking the d.c. out of the primary. By using an auto-transformer connection of a high-quality 1 to 1 overall ratio push-pull input transformer (connecting the finish of the primary to the start of the secondary) and using the inside half of the secondary as a primary winding, the good frequency characteristic of a 2 to 1 transformer is secured along with a voltage gain of 4 to 1. This can be done, of course, only when the plate of the tube is parallel fed. The circuit comprised by the primary winding and the coupling condenser was resonated at 60 cycles to give a 2 db rise at the low-frequency end of the response curve.

The next step was to measure the overall gain of the amplifier. A voltage of 0.0036 r.m.s. at 400 c.p.s. applied to the grid of the first tube gave an output of 18 watts. Since our estimate of the output of a crystal mike was .004 volts, we had gain enough with a nice factor of safety.

CIRCUIT DETAILS

Since the amplifier is a general-purpose unit, some of the circuit details will be of interest. Likewise, there are some important precautions to be observed in the construction of this and similar high-gain amplifiers of relatively high audio output which are worthy of discussion. The complete circuit diagram is given in Fig. 1.

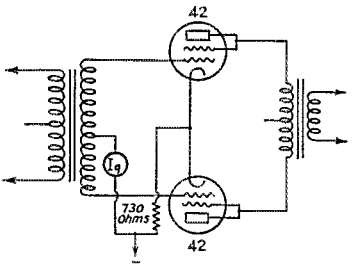

FIG. 8—ORDINARY SELF-BIAS CIRCUIT

Self-bias limits the output because of poor regulation, as explained in the text, although under the conditions discussed it proved to be better than the so-called fixed-bias circuit of Fig. 6. See Table III for data.

The input circuit for the crystal microphone is entirely conventional. Too much emphasis cannot be placed on the shielding of leads in the input circuits. The shielding must all be connected to a common ground. Do not depend on the metal chassis for ground returns, but run a lead through the amplifier to which all grounds are made. It is important that the by-pass condenser C_2, which is across the biasing resistor R_6 in the first stage, have large capacity (25 μfd.) or hum trouble is certain. It was found that even the coupling condenser C_1 would pick up stray magnetic fields unless the metal cased "bath tub" type was used and the case grounded. As shown in the diagram, shielded wiring was employed on all circuits up to the grid of the first 6C6.

The circuit used to couple the carbon microphone is not widely known and has seldom been used because of the low output of the microphone with this type of coupling. The audio voltage is developed across a center-tapped resistance, the microphone voltage being fed in the center tap. The two ends of this resistance are then coupled to the grid-cathode circuit of the first tube through condensers. The advantage of this type of coupling arises from the fact that the resistances are non-inductive and consequently are not affected by magnetic fields and currents in the chassis. The amplifier is so sensitive that even triple shielded transformers in high permeability cases would pick up a considerable amount of hum with the power unit removed several feet from the amplifier proper. The microphone connections were terminated in a socket so that either carbon or crystal microphone could be connected to the same socket by using different connections to their respective plugs. Microphone current for the carbon mike is supplied by means of a small voltage divider and a separate filter. Another filter isolates the plate supply to the voltage amplifier tubes. If this filter is not used there is a likelihood of interaction between the microphone and the amplifier stages resulting in a form of "motorboating."

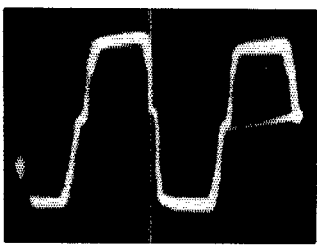

FIG. 9—THE EFFECT OF POOR BIAS VOLTAGE REGULATION IS CLEARLY SHOWN IN THIS OSCILLOGRAM

The bias circuit was that of Fig. 6. Drastic flattening of the peaks, together with discontinuities at the point of transfer from one tube to the other, result from poor bias voltage regulation. Except for the bias circuit, the amplifier was otherwise as given in Fig. 1. Quality very mushy, almost unintelligible.

The double-pole double-throw switch, *Sw*, connects an alternate input circuit for 200 or 10,000 ohms if it is desired to feed a pre-amplifier or high-impedance pickup into the speech amplifier. The gain control is placed in the grid of the second tube, where it has the least effect on the frequency response of the amplifier.

A tone control, C_8R_{13}, is connected across the output of the second 6C6. This will reduce the normal high-frequency response of the amplifier by about 8 db at 5000 cycles, and is useful when the amplifier is used in public address work to compensate to some extent for local acoustic conditions. For speech amplification in a transmitter it should not be required.

The output transformer shown in the circuit couples to a 500-ohm line, which is very convenient when the speech amplifier is any distance from the modulators or the modulated r.f. stage. A 500-ohm to Class-B grids, or 500 ohms to r.f. load transformer is required at the other end of the audio line. If it is desired to drive the Class-B grids directly, a transformer designed to couple an 8000-ohm plate-to-plate load to Class-B grids may be substituted for the output transformer.

EFFECT OF DRIVING STAGE

Reams have been written in the discussion of driver transformers about secondary resistance, leakage reactance, etc., all of which is mainly of academic interest to the average ham. The oscilloscope was set up, and photos taken showing different effects in the driver and output stages.

Fig. 2 is the output wave of the amplifier with 400-cycle input at an output level of 5 watts. The amplifier was operating strictly Class-A, since grid current does not begin to flow until the output is about 6 watts.

Fig. 3 is the same amplifier at 18 watts output.

(Continued on page 78)

GROSS RADIO, INC.

IS HAPPY TO OFFER

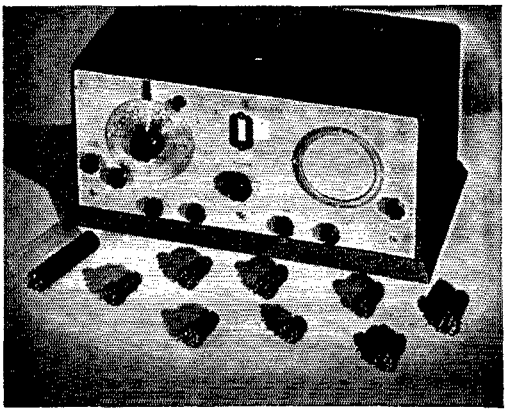

THE HALLICRAFTER

SUPER-SKYRIDER

An Outstanding Receiver

Immediate shipment from stock on this and other high grade amateur equipment

GROSS RADIO, INC., 51 Vesey St., New York City



30-15,000 CYCLES ± 1 D. B.

MULTIPLE COIL — Each Net:

Hum Free Construction

Audio Transformers $3.75

In Hum-Proof Cases

Single or Push-Pull High and Low Equalizers in Alloy Case..... $1.50

Hum Proof Alloy Case..... .75

Aalloy Transformer Co. Inc., 135Q Liberty St., N. Y. C.



sentative from A.R.R.L. Headquarters, gave a demonstration of transmitter adjustment by use of the cathode-ray oscilloscope with his portable transmitter. Followed an inspection of exhibits by jobbers and a Dutch lunch at 12:30.

In the afternoon the program began with a technical session presided over by Mr. De Soto, who gave a talk on and a demonstration of "The Mechanics of Modulation." J. P. Veatch, W9CJJ, Denver, discussed peak modulation indicators using the mercury vapor tube, and other devices. Viewing the equipment displays and a general get-together followed the talks.

At 6:15 p.m. a convention photo was taken. The banquet at 6:30 was presided over by Leo Anderson, W9OUI, Denver, a genial and amusing toastmaster. Clint De Soto, the officers of the Greeley Radio Amateurs, and the Greeley Chief of Police Billy Boggs, an interested prospective amateur, were introduced by D. L. Clark, W9NEY, secretary of the Greeley Amateurs, under whose direction the convention was given. Prizes worth $500 were awarded in the big drawing after the banquet. Everyone present received a prize and every prize was well worth winning. At midnight nineteen amateurs were initiated into the Royal Order of the Wouff Hong.

Sunday morning, September 1st an Army and Navy meeting was held, followed at 10 a.m. by a political session. Denver delegates prevailed and Denver will be the locale of the Tenth Annual Rocky Mountain Convention. It was decided that prizes would no longer be solicited except for A.R.R.L. divisional conventions. After a picnic lunch there was another prize drawing in which those present took part, and with this the convention came to a successful close.

This convention was put on under considerable handicap as both assistance and finances were limited. However, it turned out to be a financial success, a result which is seldom accomplished. Those who aided Dave Clark in putting over this convention were Glen Johnson, W9FQK, president of the Greeley Radio Amateurs; N. W. Sutphin, W9OQL, vice-president; Earl Leonard, W9SWM, treasurer; and Vernon Strait, W9ODS.

—*W9NEY*

Considerations in Speech-Amplifier Design

(Continued from page 18)

There is a slight deformation of the wave at the point where grid current starts, but the general shape is unchanged. The d.c. resistance of the secondary of the T-7432 transformer is 800 ohms.

Fig. 4 shows the effect of inserting a driver transformer having a 7300-ohm secondary. It should be noted that there is no discontinuity in the straight sides of the wave, which indicates that the transfer of the load from one tube to the other as the cycle reverses is nearly perfect.

Fig. 5 shows the effect of using a single-ended driver tube in place of the push-pull stage. A Type 42 tube, triode connected, replaced the two 76's, and a high-grade transformer designed for the service was used to couple it to the power

28 Mc.

Ten Meter Amateur-Band-Spread coils, utilizing the design principles developed for the HRO, are now available for both the FB and AGS receivers. The serial number of the receiver should be given when ordering the AGS or AGSX coils. Purchases should be made through your regular National distributor.

NATIONAL COMPANY, INC.
MALDEN, MASS.



New Multiple 5 in 1 Sheet Metal Punch —
Radio, Tinsmith and Sheet Metal Workers
Cut those holes quickly and efficiently with this patented Punch and a hammer — nothing else needed. Holes sizes 8/16, 12/16, 15/16, 1 3/16, 1 7/16. Price $3.95. Shipping weight 3 lbs.
LIVERMORE 5 IN 1 PUNCH CO.
119 So. Broon Street Madison, Wisconsin

T. R. McELROY

World's Champion Radio Telegrapher

23 BAYSIDE STREET, BOSTON, MASS.

CLOSING 1935 — OPENING 1936

I'm sincerely grateful to the nearly 2,000 operators who've purchased **MAC KEYS** this year. I'm grateful to the nearly 200 distributors who display and stock **MAC KEYS**, thereby helping both the operators and myself. I promise faithfully to continue, during 1936, making the finest code equipment I can. What more can I say? Thanks & 73, Mac.

(See my full page ad in new A.R.R.L. Handbook)

"The Passing of the Old Time Telegrapher," honey of a story in *Boston Sunday Herald*, December 1st. Every amateur and professional operator will like this article. Get one yourself and tell all operators about it. This is emphatically NOT advertising and I have prepared reprints simply because I know the ops will like it. Send me a dime for postage and handling. **BUT SEND *NOW.*** This is *swell!*

stage. The output level was 18 watts. On the lower side, the magnetic flux in the core due to the grid current of the power stage was opposing the flux due to the plate current of the driver tube, so that the two were at least partially neutralized. On the upper half of the wave, however, the two were aiding, resulting in the flattening of the top of the wave.

GRID-BIAS REGULATION

Tubes in Class AB do not operate on the linear portion of their plate current-grid voltage curves as they do in the ordinary Class-A system; as the signal on the grids increases, the *average* value of the plate current increases. This increase of average plate current with signal is the reason why the ordinary self-biasing system cannot be used in this type of amplifier. The bias voltage would increase directly with the plate current (since it depends on the voltage drop caused by the plate current through a fixed resistor) and the amplifier would be operating under much higher bias voltages at high output levels than at low ones, hence the maximum undistorted output would be greatly reduced. The bias voltage should therefore be independent of changes in the average value of the plate current.

There are several types of circuits used in commercial amplifiers to secure "fixed bias" for Class-AB amplifiers—some that result in a bias that is "fixed" only in name. The most common circuit—common because it is the most expedient—is one which employs one side of the plate-transformer high-voltage winding to supply a.c. to a half-wave rectifier fixed-bias circuit. This is shown in Fig. 6. It is simple because all that is required of the amplifier power transformer is an extra filament winding for the rectifier tube. This means, however, that an a.c. voltage of approximately 450 volts, in the case of a 42 Class-AB amplifier, is applied to a rectifier system from which a d.c. voltage of much less than 100 volts is required.

Provision is usually made for reducing the d.c. voltage by means of a voltage divider in the filter circuit. This usually takes the form of a high resistance of the order of 15,000 or 20,000 ohms between the plates of the rectifier and the filter choke, and then a potentiometer-type divider on the load side of the choke to allow for adjustment of the voltage. This type of "fixed-bias" supply will operate fairly satisfactorily where grid current does not flow at any output level within rating, as is the case with 2A3's. But in amplifiers employing 42's or 45's in Class-AB, where grid current is a big factor, this type of circuit is not at all satisfactory.

The path for grid current is through the secondary winding of the driver transformer, out the center tap of the winding to the bias circuit, and through that to the cathode. That part of the fixed-bias circuit which is common to the grid-current return path has on the order of 5000 to 15,000 ohms in it, and since the grid current under conditions of high output may be as high as 8 to 12 ma. it is readily apparent that there will

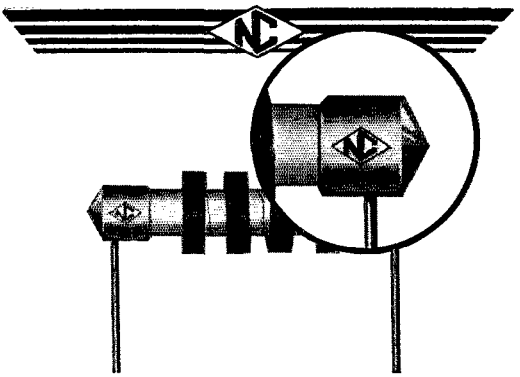

Appearance is much easier
to imitate than performance

PATENTED

NATIONAL COMPANY, INC.
MALDEN, MASS.

BUILD YOUR TRANSMITTER!

Amateurs! Build a real high power transmitter with "PROGRESSIVE" UNITS — step by easy step. Genuine "Push-Pull" Moisture-proofed transformers. ● Send 25c for sensational new "PROGRESSIVE TRANSMITTER GUIDE" — 12 circuit diagrams, 12 illustrations, 28 pages. Shows you clearly how to complete each simple step. ● Or send for Free Bulletin, Form 20, "Progressive Transmitter," listing complete supplies for quality Amateur transmitters.

GENERAL TRANSFORMER CORP., 518 S. Throop, Chicago ●

PRECISION CRYSTALS

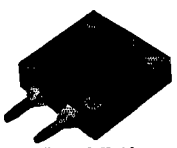

Crystal Holder

'X' and 'AT' cut crystals one inch square carefully ground for frequency stability and maximum output. Be sure of your transmitter frequency — use PRECISION CRYSTALS. Guaranteed to be the highest quality obtainable.

'X' cut PRECISION Crystals carefully ground for maximum power supplied to your specified frequency accurate to 0.1% and calibrated to within 0.03% are priced as follows: 1750 and 3500 kc. bands — $3.00 each. 7000 kc. band — $3.50. Add $1.00 to above prices if plugin, dustproof holder is desired. (Holder as illustrated to fit G. R. type jacks or round holder to plug into tube socket can be furnished) G. R. jacks to plug illustrated holder into — $.15 pair.

The 'AT' cut crystal recently developed has a temperature coefficient of practically zero and will handle more power than ordinary crystals. 'AT' cut crystals ground to your specified frequency accurate to 0.1% and calibrated to within 0.03% are priced as follows: 1750 and 3500 kc. bands — $6.00 each. Crystal holder — $1.00. Jacks for holder $.15 pair.

Crystals and ovens for commercial use quoted on at your request. When ordering our product you are assured of the finest obtainable. Now in our sixth year of business.

PRECISION PIEZO SERVICE

427 Asia Street **Baton Rouge, La.**

be a very definite increase in bias voltage between the no-signal condition and that of maximum output. In addition, the driver transformer and Class-AB tubes in rectifying the audio voltage act as a power supply in parallel with the bias supply, and tend to relieve the load on the bias supply at high outputs. Thus any resistance in series with the bias supply makes the regulation

TABLE I
Bias Voltage *vs.* Output Watts
Bias Circuit Fig. 6

Watts Output	*Grid Volts*	I_1 *ma.*	I_2 *ma.*	I_g *ma.*
0	38.0	8.0	8.0	0
3	38.0	8.0	8.0	0
5	38.5	8.0	8.0	0
7	43.1	8.0	9.0	1.0
10	50.5	8.0	10.3	3.0
13	61.0	7.7	13.0	5.4
16	73.5	7.5	15.0	8.3
18	79.5	7.1	16.5	9.6
21.8 (Max)	96.5	7.0	20.0	12.5

TABLE II
Bias Voltage *vs.* Output Watts
Bias Circuit Fig. 7

Watts Output	*Grid Volts*	I_1 *ma.*	I_2 *ma.*	I_g *ma.*
0	38.0	47.0	47.0	0
3	38.0	47.0	47.0	0
5	38.0	47.0	47.0	0
7	38.2	46.0	47.0	1.0
10	38.5	45.8	47.8	2.5
13	39.8	45.2	49.0	4.5
16	41.0	44.5	50.0	6.5
18	42.0	42.0	51.0	8.2
26 (Max.)	46.0	40.0	54.0	15.5

TABLE III
Bias Voltage *vs.* Output Watts
Self-Bias, 730 ohms—Circuit Fig. 8

Output Watts	*Grid Volts*	*Ig ma.*
0	36.5	0
3	39.0	0
5	41.0	0
7	43.5	0.5
10	51.0	2.6
13	59.0	5.7
16	67.0	8.2
18	72.5	10.0

worse, and the bias voltage increases in almost direct ratio to the power output. Tables I, II, and III show the variation in bias voltage with power output for the three biasing methods given in Figs. 6, 7 and 8. It is interesting to note that the self-biased system has less voltage increase than that of Fig. 8.

It is evident that the bias circuit must afford a low-resistance path for grid current and it might be noted in passing that a low-resistance path through the secondary winding of the driver transformer is just as important, for the same reasons. If the value of this bias supply resistance is to be made smaller and the no-signal bias voltage remain the same a larger current must be taken from the filter circuit. As the circuit in Fig. stands, there is a bleeder current of about 8 or

If there were a **BETTER WAY** of Acquiring CODE SPEED the Champions Would Know It



TED McELROY, World's Official Champion Radiotelegraph Operator. Speed 69 words per minute

CHAMPION McELROY says: "If there were a better way to acquire code speed and technique, I should know it. CANDLER SYSTEM gave me the *Speed, Accuracy* and *Skill* to win the championship. Those who want real speed will save themselves much time, expense and discouragement by following my example."

FREE — BOOK OF FACTS for those who want to learn code RIGHT or to acquire speed quickly, also copy of McELROY's story. Send for it. No obligation. *Your License Guaranteed.*

CANDLER SYSTEM CO.

Dept. Q-12 Box 331 Asheville, N. C.

GULF RADIO SCHOOL

Radiotelegraphy Radiotelephony

Radio Servicing

SECOND PORT U. S. A. 1007 Carondelet Street NEW ORLEANS, LA.

HIPOWER CRYSTALS

THE NEW and IMPROVED Completely shielded I. F. Crystal Unit. Designed especially for the S.S. RECEIVER.

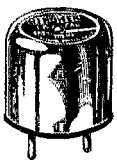

Incorporated in new receivers by leading set manufacturers.

Supplied in 3 freq. 525 Kc. 500 Kc. and 465 Kc. See it at your dealer's or write for descriptive Literature.

TYPE IFS. Price $5.45

LOW DRIFT TRANSMITTING CRYSTALS

Thick cut, low drift "AH" cut crystals are from 2 to 40 times as stable as the X or Y cuts. Supplied within 10 Kc. of specified frequency or choice of dealer's stock.

	1700-3500 Kc.	7000-7300 Kc.
"AH" 10	$2.35	$3.90
"AH" 5	3.90	5.90
"AH" 2	8.90	12.90

The number following "AH" is the drift in cycles per °C. per 1000 Kc.

ORDER FROM YOUR DEALER — *or direct*

Send for Descriptive Literature

HIPOWER CRYSTAL CO., 2035 W. Charleston St., Chicago, Ill.

10 ma. To reduce the value of the resistance the current should be of the order of 50 ma. Now 8 or 10 ma. additional from one side of a high-voltage winding designed to give 150-ma. d.c. will not cause any serious damage, but 50 ma. would mean a much greater power drain, consequent overheating of transformer, and a serious unbalance in the high voltage supply to the main filter. For these reasons such a bias circuit cannot be readily adapted to give satisfactory performance.

The bias supply of Fig. 7 was therefore developed. The high-voltage winding on the power transformer has a tap which gives the right a.c. voltage for the bias rectifier-filter so that a low value of bleeder resistance can be used. The actual value of resistance in use is only about 800 ohms when the bias tap is adjusted on the amplifier—quite different from the thousands of ohms used in the circuit of Fig. 6. Instead of an a.c. voltage of 450 (at 50 ma.) applied to the bias rectifier, the voltage is only about 75 (also at 50 ma.). This means much less wasted power, less heating in the power transformer, and incidentally filter condensers of much lower voltage ratings.

Besides its degenerative effect, varying bias is a source of distortion because of its effect on the driver tubes. The flattening of the peaks of the wave in Fig. 9 results from a combination of these two effects.

While the data discussed apply directly to the amplifier described, the same principles apply to amplifiers using tubes of similar characteristics and should be considered in the design of amplifiers of this type. Undoubtedly those who may have had unsatisfactory results with Class-AB or Class-B amplifiers could trace their troubles to some of the inherent defects pointed out in this article.

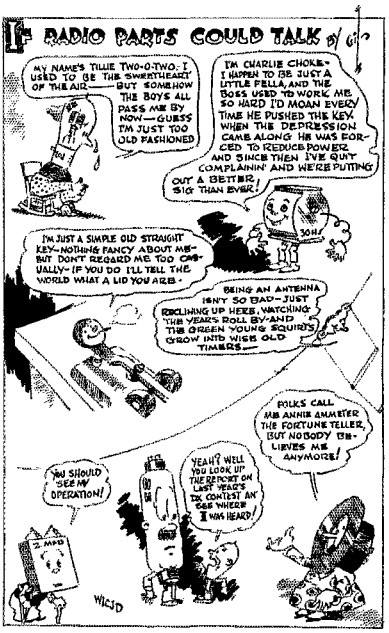

Pentodes as Class-AB Amplifiers

IN OPERATING pentode-type tubes in high-power audio stages of the Class-AB type it has been customary to use the tubes not as pentodes but as triodes, the screen being connected directly to the plate in each tube. This method of connection does not retain the characteristic high power-sensitivity of the pentode-connected tube, however. On the other hand the regular pentode connections, with screen at the same d.c. potential as the plate but grounded for audio, cannot be used in Class-AB amplifiers because the plate potentials required for high power outputs (of the order of 350 volts) would cause the power dissipated in the screen to be far beyond the safe value. If, however, the screen voltage is kept down to its normal value for Class-A service—about 250 volts—the plate potential may be increased without damage to the tube.

The advantages of using the pentode connection in Class-AB service are greater power sensitivity—less grid voltage swing required and less power taken from the driver—than for triode operation, generally greater output, especially with self-biased circuits, and lower total distortion at maximum output. The following information on operating 6F6 tubes as pentode Class-AB amplifiers is taken from an *Application Note* published by RCA Manufacturing Company, Inc.

A typical circuit for 6F6 pentodes as Class-AB amplifiers driven by a single 6F6 triode-connected is given in Fig. 1. Recommended values of cathode resistor for both stages are given in the diagram; these should be by-passed by large-capacity condensers in the usual way. It will be noted that this circuit differs from the regular push-pull amplifier circuit only in that the screens are operated at a lower potential than the plates. If fixed bias is to be used on the power stage, the negative high-voltage return should be made to the cathodes, a source of fixed bias being inserted in place of the cathode resistor indicated.

Tests have shown that the optimum plate-to-plate load is substantially independent of the voltage regulation of the power supply (this factor must be considered, since the current varies with the signal) and likewise of the voltage regulation in the screen circuit. It is also independent of the bias system used, being a function of the power output desired, the permissible distortion, and the allowable plate and screen dissipation. Plate and screen voltage regulation is a factor in the determination of the optimum input transformer ratio, however, and the biasing method also is found to influence the input transformer design. Optimum operating data are given in the following table for both fixed and self bias.

TABLE I

Driver—6F6	*Fixed Bias**	*Self Bias*
Input signal, r.m.s.	10.1	10.3 volts
Plate load resistance	21,800	33,100 ohms
Max. power output	288	261 mw.
Interstage transformer		
Turns ratio, pri. to ½ sec.	1.54:1	1.74:1
Peak power efficiency	73.5	64.4%
Output stage—two 6F6's		
Peak grid input power	210	168 mw.
Peak grid input voltage (per tube)	47.4	50.5 volts
D.c. grid current (per tube)	1.2	1.0 ma.
Zero-signal plate current (per tube)	17	27 ma.
Max. signal plate current (per tube)	39.5	37.5 ma.
Zero-signal screen current (per tube)	2.5	4.0 ma.
Max.-signal screen current (per tube)	8.0	7.5 ma.
Plate-to-plate load	10,000	10,000 ohms
Power output (two tubes)	18.5	17.1 watts
Total harmonic distortion, percent	5.1	5.0

* Fixed bias, −26 volts.

In the above table, the voltage regulation of the plate supply is assumed to be equivalent to 1000 ohms in series with the plate and an additional 2000 ohms in series with the screen from a plate supply with perfect regulation, on the assumption

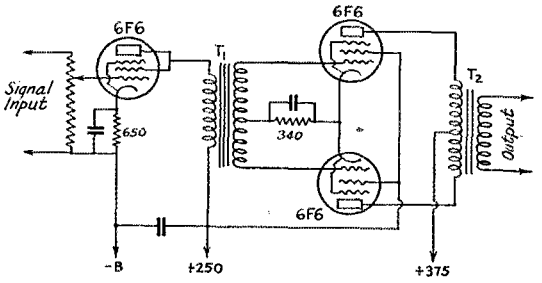

FIG. 1

that in an actual receiver or amplifier the plate voltage would be obtained directly from the first filter condenser while the screen voltage would be secured from a point on the voltage divider or through the drop in a speaker field coil. These figures probably represent average conditions.

(Continued on page 52)

New Receiving Tubes

A NEW duplex-diode triode, to be known as the 6R7, has been added to the metal tube series, according to announcements from Raytheon and RCA-Radiotron. The triode section of the 6R7 is a medium-μ affair, designed to give

(Continued on page 70)

EVEREADY

PLUG-IN

RADIO BATTERIES



Simplifies Battery Connections. Socket firmly embedded in the battery seal. Can't come loose.

Adapter furnished with each battery. Connect up once to adapter. When replacing batteries, remove adapter from old battery and place in socket of new battery. Prevents mistakes in connecting up.

"Sealed Socket" construction now available on all popular types of Eveready "B" and "C" batteries.

Headquarters for Battery Information

NATIONAL CARBON COMPANY, INC.

General Offices: New York, N. Y.
Branches: Chicago, San Francisco

UCC

Unit of Union Carbide and Carbon Corporation

friends in radio have been made in this way. From my letter you may get the idea that I am a newcomer in radio. This is far from the facts. I have been interested in radio since 1912 when I had my first receiver, one of the old Navy tuners with a loading coil that was quite long. I forget just how long, but it was plenty big. Then in 1920 I became interested in radio from a broadcasting angle, as a lot of other experimenters did. I was content to listen and experiment until 1932, when I obtained my transmitting license, and have been on the air ever since. I know it sounds sophisticated to grumble about SWL cards, etc., but I don't think it reflects the spirit of ham radio and wish to take this opportunity to express my disapproval. . . .

—*Chas. W. Cover, W8KVJ*

EDITOR'S NOTE.—The editorial in question objected not to acknowledging SWL cards by means of QSL cards or letters, but to their acknowledgment *over the air, à la* early broadcasting stations and their fan mail. Discouragement of short-wave listeners is certainly not *QST's* policy; preservation of amateur radiotelephone as a two-way communicating medium, as opposed to illegal and unethical private broadcasting, most assuredly is.

207 N. Arden Drive, Beverly Hills, Calif.

Editor, *QST:*

I certainly agree with the editorial in this month's *QST* about 'phone procedure, especially the entertainment part. After hearing a certain W6 last night I am so mad I can't see straight! His transmission was something like this:

He talked for a minute or so to the fellow he had the QSO with, and then began strumming on a guitar and singing slightly off key. After a few songs he said, "W6— has just completed a modulation test and is not broadcasting for entertainment purposes." There was a little more talk and then he said, "And here's a modulation test for so-and-so," and again burst into song. He made several "modulation tests" for various friends, in the meantime cluttering up the air while someone with a message may have been QRM'ed and many persons were undoubtedly annoyed.

The ham bands are overcrowded with good operators and we don't need these fakes who not only break the F.C.C. rules but destroy the amateur spirit.

I wish that the League would start a drive against these fellows. With all the fine hams on the air we could get rid of the offenders easily if we got down to business. How about it?

—*Irene Kahn*

Pentodes as Class-AB Amplifiers

(*Continued from page 29*)

The type of distortion present depends upon the signal level. At low levels only the second and third harmonics are present, the second harmonic being attributable to the driver stage. Higher-order harmonics do not appear until the output is about eight watts (at this level the total distortion is approximately 2%) after which the fifth, seventh, ninth, and eleventh harmonics appear. There harmonics represent an appreciable part of the distortion at maximum output.

The input transformer efficiencies given above are average for the type of transformer. The leakage inductance should be small. Any serious deviation from the ratios specified will result in either lower power output or increased distortion.

Experimenters' Section

(*Continued from page 34*)

across them. Screw down the adjustment screw on the buzzer so that it clicks instead of buzzing.

The clicks will stay in the buzzer and out of BCL sets. At W3EEK all interference with the family b.c. set is stopped although the transmitting aerial runs not five feet from the b.c.

Some Practical Inverse Feedback Circuits for Audio Power Amplifiers*

Improved Output Voltage Regulation With Reduced Harmonic Distortion

WHEN power output and distortion characteristics of the final stage of an a.f. amplifier are to be determined, it is customary to replace the loudspeaker by a fixed resistance of suitable value. Actually, a loudspeaker does not present the same impedance to an output tube at all audio frequencies. At the resonant frequency of the speaker, which is usually less than 100 cycles, the impedance of the speaker is high and resistive. At higher frequencies, the impedance of the speaker increases with frequency, because the voice coil has inductive reactance. Unless the variable effects of such a

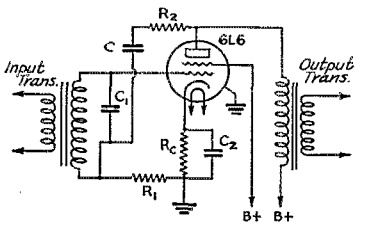

FIG. 1—SINGLE-TUBE INVERSE FEEDBACK CIRCUIT

C—0.1 μfd. or larger.
C_1—0.001 to 0.002 μfd.
C_2—Cathode-resistor by-pass condenser.
R_c—Cathode resistor.
R_1—5000 ohms for 10% inverse feedback.
8330 ohms for 16.6% inverse feedback.
R_2—45,000 ohms for 10% inverse feedback.
41,670 ohms for 16.6% inverse feedback.

load are reduced by a low-resistance output tube, low frequencies "hang-over" and are accentuated by resonance effects in the speaker; high frequencies are accentuated by the rising impedance characteristic of the speaker.

The internal resistance r_p of an output tube shunts the plate load Z_1. When r_p is appreciably less than Z_1, large variations in load impedance do not appreciably affect the output voltage, because the variable load impedance is shunted by the comparatively low resistance of the output tube. Hence, when a low-impedance triode is used in the output stage, the effects of the variable speaker impedance are reduced. When the internal resistance of the output tube is high compared to the load impedance, the effects of variable speaker impedance may seriously impair quality. This latter condition exists when tetrode- or pentode-type output tubes are used without compensating circuits.

*From Application Note No. 64, RCA Radiotron Division, RCA Mfg. Co., Inc. (Aug. 26, 1936).

Inverse feedback circuits can be used in a.f. power amplifiers to decrease distortion and to lower the plate impedance (improve the output voltage regulation). The circuits of a practical single-tube and of a push-pull amplifier using partial inverse feedback are shown in Figs. 1 and 2, respectively. Resistors R_1 and R_2, and condenser C are connected in series; the combination is connected from the plate of each tube to ground. Nearly all the a.c. voltage developed across the load appears across R_1 and R_2 when the capacitance of C is high. Of this voltage, that due to $R_1/(R_1 + R_2)$ is applied in series with the input-signal voltage; this ratio is defined as the per cent degeneration, n. With any per cent degeneration, the tube acts as though its normal internal resistance r_p were shunted by a resistance $1/(n\ g_m)$, where g_m is the transconductance of the tube. The input signal required for rated output is approximately

$$E_d = E_o \left(1 + \frac{n\ g_m\ R_l}{1 + R_l/r_p}\right),$$

where E_o is the input signal required for rated output without inverse feedback. The distortion with inverse feedback is approximately

$$D_d = \frac{D_o}{1 + \dfrac{n\ g_m\ R_l}{1 + R_l/r_p}},$$

where D_o is the distortion without inverse feedback. The transconductance of the tube is not changed by the addition of this type of degeneration.

The cathode resistor, R_c, has the same value with and without inverse feedback, because electrode voltages are not changed when this circuit is used. Also, the load impedance into which the tube operates should not be changed when inverse feedback is added. The load resistance that is optimum without degeneration is also optimum with degeneration. Therefore, in order to use inverse feedback in some receivers, it may be necessary only to install R_1, R_2, and C.

CIRCUIT PRECAUTIONS

Although the inverse-feedback circuits of Figs. 1 and 2 offer certain advantages, the following precautions should be observed in the design and use of these circuits in order to avoid the possibility of instability, oscillation, or a marked divergence from expected results.

1. A conventional resistance-coupled input circuit cannot be used with this type of degenerative circuit, because the input-signal voltage must be in series with the feedback voltage for proper operation.

2. It may be desirable to connect small fixed condensers, C_1, across each secondary of the input transformer in order to avoid the possibility of oscillation due to leakage inductance and shunt capacitance in the input-transformer circuit. It is advisable to determine by test whether or not these condensers are necessary.

3. The blocking condensers (C in Figs. 1 and 2) should be placed between R_1 and R_2, as shown. When placed between R_2 and plate, the circuit may oscillate because of the capacitance of C to grid.

4. It might appear that the primary of the output transformer could be tapped at the proper point or that a tertiary winding could be used to obtain the necessary feedback voltage. Attempts to use such schemes may be unsuccessful because of phase shifts due to leakage inductance.

5. This type of circuit is not suitable for use in amplifiers that are designed for grid-current operation, because the relatively high values of R_1 cause appreciable grid-circuit distortion.

RESULTS OF OPERATING TESTS

Inverse feedback reduces the power sensitivity of an amplifier. In circuits having this feature it is, therefore, desirable to use an output tube that has high power sensitivity in order to obtain normal power output with reasonable signal voltage. For this reason, the 6L6 tube is well suited for use in this type of circuit. Preliminary tests indicate that the shunting effect on a speaker load by two type 6L6 tubes with 10 per cent degeneration is comparable to that which can be obtained by two low-resistance triodes in a similar circuit without degeneration. At the same time, the power sensitivity of the 6L6 amplifier is approximately twice that of the triode amplifier and the inherently high efficiency of the Type 6L6 tube is retained. In one test, a push-pull amplifier using two Type 6L6 tubes without degeneration was set up under the following typical operating conditions:

Plate voltage, 400 volts; screen voltage, 300 volts; grid bias, — 25 volts; plate-to-plate load, 6600 ohms.

With a peak grid-to-grid signal of 50 volts, the power output was approximately 34 watts at 2 per cent distortion. When 10 per cent degeneration was added, using the circuit of Fig. 2, an output of 34 watts was obtained from the tubes at the grid-current point with approximately 1 per cent distortion; grid current flowed with a peak grid-to-grid signal of 130 volts. No changes were made in electrode voltages or circuit constants.

The frequency characteristics of a typical amplifier with and without inverse feedback and with several values of shunt condensers for the same signal input indicate that the rise in power output at the resonant frequency of the speaker decreases and the high-frequency response flattens considerably when this form of degeneration is used. The effect of the shunt condensers, C_1, on frequency response is small, as the secondaries of the input transformer have low impedance.

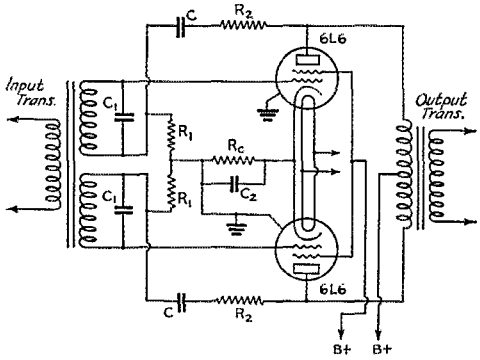

FIG. 2—PUSH-PULL STAGE WITH INVERSE FEEDBACK

Capacitance and resistance values are the same as in Fig. 1.

Oscillograms indicate the damping action of an inverse-feedback circuit when a short-impulse signal is fed to the grids of a push-pull amplifier and the output tubes are connected to a loudspeaker through an output transformer; the voice coil of the speaker is connected to a cathode-ray oscilloscope in order to observe the wave form of the voice-coil voltage. A slowly decaying output voltage results without degeneration while a more rapid decay is obtained with 10 per cent degeneration. A slight further improvement is obtained by using 16.6 per cent degeneration.

These studies show that nearly the same amount of damping of a speaker load can be obtained from Type 6L6 tubes with 10 per cent degeneration as from good low-impedance triodes without degeneration. However, for approximately the same input-signal voltage and B-supply power, about twice the power output can be obtained from two 6L6 tubes as from two good triodes.

Strays

Corrections

In the diagram of the NC-100 receiver, Fig. 1, page 31, December *QST*, condenser C_{22}, the heater by-pass on the high-frequency oscillator, should be returned to ground instead of to the cathode.

In Part II of W2BRO's article on the 6E5, November *QST*, the formula on page 26 should be

$$R_s = \frac{E_s R_k}{E_k}$$

Dual-Triode Phase Inverters as Push-Pull Audio Drivers

Characteristics and Practical Operating Data for Typical Amplifier Combinations

By Curtis R. Hammond*

THE new beam-power tubes have created the demand for a simple push-pull driver having the desirable characteristics of low distortion, high gain, and wide frequency response. The phase inverter type of driver incorporating two triodes fills the above requirements with the additional advantage of low cost as a result of the reduction in the number of component parts necessary. In applications where a minimum amount of space is available, the double triode is of special advantage.

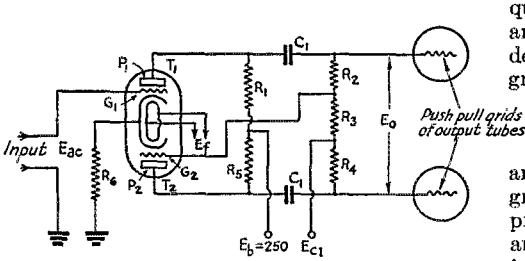

FIG. 1—THE DUAL-TRIODE PHASE-INVERTER CIRCUIT

Circuit values and operating conditions for different types of tubes are given in the table.

The theory of the phase inverter is not difficult and can be explained simply as follows: In the circuit of Fig. 1, E_{ac} develops a voltage across R_1 that also appears across R_2 and R_3. The voltage across R_1 is 180° out of phase with E_{ac}, and if a portion of this voltage is fed to G_2 the resulting voltage output of P_2 in R_5 is in such phase relation that the grids of the output tubes, driven by P_1 and P_2, are in the proper phase relation for push-pull operation.

To drive the output tubes properly the grid swing to each tube must be equal. To obtain this condition the voltage output of T_1 and T_2 must be equal. This is accomplished by dividing the output of T_1 with the resistors R_2 and R_3 so that the ratio of the voltage across R_3 to the total voltage across $R_2 + R_3$ is equal to the reciprocal of the amplification of the triode T_2. Although T_2 and T_1 do not have to be similar triodes, for any combination the above ratio must hold true. In many applications it is desirable to use a high-gain triode for T_1 and a low-gain tube for T_2. The circuit of Fig. 2 shows the two-tube phase inverter.

The tube complement for the inverter stage is usually chosen to give the particular gain required with the limitations imposed by the plate and grid resistor values. For example, a driver is desired with medium gain to drive push-pull grids that can tolerate a maximum grid-return resistance of 50,000 ohms. This value is then that of R_4 and also the sum of the resistances R_2 and R_3. Conventional resistance-coupled amplifier theory for the calculation of plate and grid resistors would limit the plate resistor to approximately one-half the value of the grid resistor, and R_1 and R_5 would therefore have to be approximately 25,000 ohms. The parallel impedance of these two resistors is 16,700 ohms and the plate resistance of a tube to operate satisfactorily with this load should be less than 8,000 ohms (approximately). The types 6C5, 56, 76, 6R7, 6A6, 53, 6N7, would be satisfactory if the voltage output need not be too large. For low distortion and a high-voltage output the 6E6 would be better. The choice in any case depends upon the results desired.

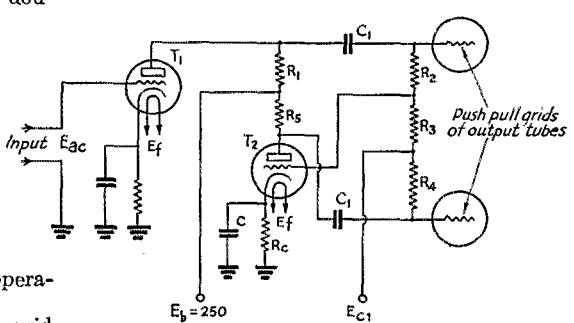

FIG. 2—PHASE-INVERTER CIRCUIT USING TWO SEPARATE TRIODES

T_1 is usually a high-gain triode and T_2 a low-gain triode, although T_1 may be a pentode in cases where high amplification is desired. The gain of T_2 is kept low so that the ratio $R_3/(R_2+R_3)$ can be maintained at some fixed value.

*Ken-Rad Tube and Lamp Corporation, Inc., Owensboro, Ky.

Having selected a tube for the inverter, the gain can be calculated and R_2 and R_3 evaluated from the relation,

$$\frac{R_3}{R_2 + R_3} = \frac{1}{\text{Gain}}.$$

The stage gain can be calculated by graphical methods with the aid of a plate current family or by using the equation

$$\text{Gain} = \mu' = \frac{\mu R_L}{R_p + R_L}.$$

R_L is the parallel resistance of the plate resistor and the grid resistor of the following tube, while R_p and μ are plate resistance and amplification factor at the operating point. Published values of μ and R_p can be used with fair accuracy, provided that the plate load is not more than three times the plate resistance of the tube and the bias low enough that the operating point is not in the region of crowded plate current curves.

Typical operating conditions have been chosen and the various circuit components evaluated for several typical phase inverter tubes. The data are assembled in the table and show, in addition to circuit component values, the approximate gain per triode, maximum output volts, operating bias, and plate current for each system.

TWO-TUBE COMBINATIONS

The component values for single tubes listed in the chart may be used to determine operating conditions for the inverter tube of a circuit similar to that of Fig. 2. In such a circuit, T_1 can be a high-gain triode or pentode and T_2 can be one of the low-gain triodes of the chart. The high-gain values of R_5, R_2, R_3, R_4 and C_1 should be used. The value of R_c should be twice that listed for R_6 in the chart.

As a typical example, a type 75 high-mu triode may be used for T_1 and a Type 76 used for T_2. The high-mu tube could use a 0.25-megohm plate resistor with the sum of R_2 and R_3 equal to 0.5 megohm. The 0.5-megohm grid return resistance is especially desirable because the inverter tube high-gain values in the chart give 0.5 megohm as the grid resistor. The values of R_5, R_2, R_3, R_4 and C_1 can then be taken directly from the chart. The plate current, gain, and other characteristics are also applicable.

If two dissimilar triodes are used, individual bias resistors and by-pass condensers are not

OPERATING CONDITIONS FOR SIMILAR TRIODES

Tube Type	R_6	R_1 R_5	R_2	R_3	R_4	C_1	*Gain Per Triode*	***Peak Output Volts E_o Approx.*	*Grid Bias Volts*	*Plate Current Per Triode*
*6A6 53 6N7 6N7G	3,000	250,000	481,500	18,500	500,000	0.1 μfd.	27.0	128	− 3.2	0.53 Ma.
6A6 53 6N7 6N7G	670	25,000	46,700	3,230	50,000	1.0 μfd.	15.5	95	− 3.5	2.6 Ma.
6E6	1,500	25,000	40,000	10,000	50,000	1.0 μfd.	5.0	125	− 15.0	5.0 Ma.
2–76 2–56	2,250	50,000	455,000	45,000	500,000	0.1 μfd.	11.0	169	− 9.0	2.0 Ma.
79	3,000	250,000	489,000	11,000	500,000	0.1 μfd.	47.0	124	− 2.0	0.33 Ma.
*2–6C5 2–6C5G	1,710	50,000	464,300	35,700	500,000	0.1 μfd.	14.0	146	− 6.5	1.9 Ma.
2–6C5 2–6C5G	980	25,000	45,000	5,000	50,000	1.0 μfd.	10.0	114	− 6.5	3.3 Ma.
*2–6R7 2–6R7G	1,600	50,000	458,000	41,600	500,000	0.1 μfd.	12.0	143	− 7.0	2.2 Ma.
2–6R7 2–6R7G	750	25,000	44,750	5,250	50,000	1.0 μfd.	9.5	95	− 6.0	4.0 Ma.

*High gain values.
** Maximum output obtained with a nominal amount of distortion. The output for 5% total harmonics is somewhat less than this value.

necessary. The cathode of the tube T_1, which is normally a high-gain tube using a low value of bias, may be connected to a tap on the cathode resistor of T_2. The resistance from the tap to ground would normally be low and the only by-pass condenser necessary would be that across the total resistance.

For several types, two operating conditions are shown. For these types a high-gain condition is given and low-gain constants are shown that allow a grid resistor of only 50,000 ohms to be used. Although this condition results in a much lower gain than is normally obtained, it makes possible the use of the phase inverter to drive fixed-bias Class-A and Class-AB output systems that use 50,000-ohm grid return resistors. The 6L6, for example, can be operated push-pull Class-AB with fixed bias to give 34 watts of undistorted output. This condition limits the grid return resistor to 50,000 ohms and any one of the drivers listed for operation with $R_4 = 50{,}000$ may be used.

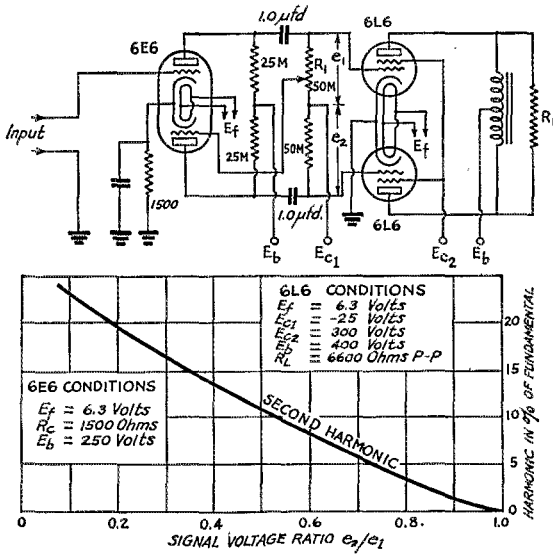

FIG. 3—SHOWING THE CHANGE IN DISTORTION FOR UNBALANCED SIGNAL TO GRIDS OF PUSH-PULL CLASS-AB 6L6 STAGE; e_1 AND e_2 BEING THE SIGNAL VOLTS TO THE 6L6 GRIDS

The signal voltage ratio e_2/e_1 is varied by the volume control R_1. Each 6L6 develops a second harmonic that is cancelled because of the push-pull connection. If e_1 and e_2 are unbalanced, the second harmonics in the load are not equal and are not cancelled.

BALANCE IMPORTANT

Experience with phase inverters has shown that the high-gain types using tubes such as the 79 or 6N7 are not always satisfactory because of unbalance of the two triodes. On production lines the high-gain inverter is difficult to balance because resistors R_3 and R_2 must be held to a very close tolerance. Also, at high frequencies the tube and circuit capacitances in shunt with resistors disrupt the balance that may exist at low frequencies.

The degree of unbalance that may be tolerated depends upon the type of output tubes used. Output tubes that are over-biased usually develop a high second harmonic in each tube that is canceled because of the push-pull connection. Class-AB systems whose operation is restricted to negative grid regions come in this class. But phase-inverter drivers must be balanced at all frequencies if undistorted output is desired. The curve of Fig. 3 shows the distortion that results from an unbalanced signal to the grids of Class-AB 6L6's. The distortion is second harmonic and results from the fact that one tube is driven to a greater output than the other. The Class-AB 6L6 system is typical of push-pull output tubes that develop a high second harmonic in each tube. Amplifiers of this type must be balanced or the second harmonic generated in each tube will not be canceled.

The 807 as a Crystal Oscillator

(Continued from page 19)

ever the center-tap arrangement probably allows more latitude in key click filters and has the advantage of being electrically behind the entire filter system.

As to results and operation, very little more could seem to be desired. Power inputs varied from 24 watts to 40 watts with varying values of plate voltage and plate-grid condenser C_2. In comparison with the 6L6, the 807 appears to offer a greater stability and efficiency. It does not want to draw as much power as the 6L6 but does give more stable power output in the antenna. It offers definitely greater advantages at the higher frequencies. In other words, the results completely fulfilled the desires and exceeded the expectations. Later additions of power in this shack will certainly see the 807 in operation as oscillator or amplifier or both. Beam power means economy and results to the ham. In the short time in operation, the RST reports have all been of the 599X or 589 variety. Sufficient signal strength and stability have been shown to work through a surprising lot of QRM.

Strays

In the description of the 6L6 Tri-tet in November *QST*, mention of C_5 in the diagram on page 36 was inadvertently omitted. It is a 100-$\mu\mu$fd. midget, the condenser itself being a Cardwell Type ZU-100-AS.

A Modulator for the Low-Power Five-Band Transmitter

A Metal-Tube Audio Unit Using Class-A 6L6 Output

By George Grammer*

IN DISCUSSING the low-power transmitter described in December 1936 *QST*[1] it was pointed out that one of the design features was that of providing for plate modulation for radiotelephony. The present article is concerned with the description of a modulator primarily intended for working with that transmitter, although it can also be used for modulating other 30-watt input rigs or, with slight modification, as a driver for a higher-power modulator.

In recent years it has become natural to think of Class-B whenever plate modulation is under consideration. This is understandable enough, because Class-B audio amplification offers the opportunity for getting large amounts of audio power at less expense than other systems. For low power levels, however, recent developments in beam tubes have again brought Class-A amplification within the economical price range, partly because it is now possible to get more power at low plate voltages and partly because fewer coupling transformers are required. The smaller variations in plate current with voice input also simplify the power-supply requirements because poor voltage regulation is less serious.

These various factors of cost, power output and simplicity of design were given due consideration in planning the modulator unit pictured herewith. The audio power output necessary for modulating the 30 watts input to the final stage in the transmitter is 15 watts; a pair of 6L6's can deliver this output readily when operating purely Class-A. An important factor is that no driving power for the grids is needed to obtain this output; this eliminates one cause of distortion, permits dispensing with a special coupling transformer, and avoids the necessity for using a driving stage having considerable power output.

The number of tubes required in the speech amplifier naturally enough is a function of the gain needed for the particular microphone used. It seemed reasonable to us to assume that the owner of a low-power transmitter—since low power is used chiefly because it is inexpensive—naturally would think first of economy when considering a modulation system. Fortunately the less expensive types of microphones also are the ones which give the highest output, so that fewer speech amplifier stages are necessary. Carbon microphones, because they are obtainable at lower cost than any other types, therefore seemed the logical choice, and on looking into the microphone situation it was found that a double-button model could be purchased practically as cheaply as the single-button type. The double-button type is preferable because the push-pull arrangement reduces distortion.

The output level of the low-priced double-button microphones is such that two speech stages before the modulator give more than ample gain. It might even be possible to use only one, but the extra stage adds little to the cost of the audio section and provides a conservative factor of safety. The tube line-up used in the practical modulator consists of a 6C5 first stage, a 6N7 second stage, and a pair of 6L6's in the third and final stage. The circuit diagram is given in Fig. 1.

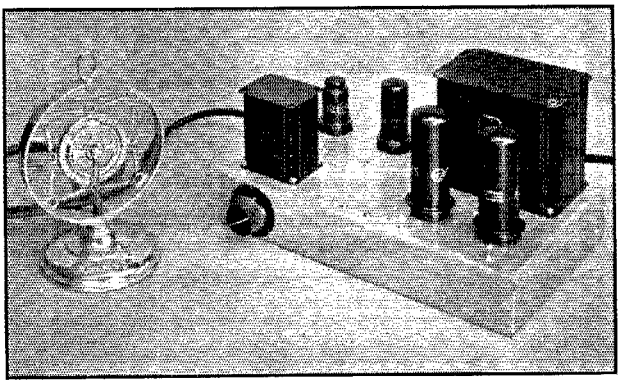

THE SPEECH-AMPLIFIER AND MODULATOR UNIT FOR THE LOW-POWER TRANSMITTER

Using metal tubes throughout, the output stage is a pair of 6L6 beam tubes. The microphone is a double-button carbon type, Shure No. 3-A.

CIRCUIT DETAILS

Referring to Fig. 1, the microphone works into the conventional input transformer. The small numbers on the input connections refer to the

*Assistant Technical Editor.

1—"An Inexpensive Five-Band Low-Power Transmitter," *QST*, December, 1936.

terminal numbers on the type of transformer specified in Fig. 1. Terminals 3 and 4 are joined together and grounded; Nos. 2 and 5 are the microphone button connections. The gain control, R_1, is connected across the secondary of the microphone transformer. Its rotor connection goes to the grid of the 6C5.

In the 6C5 stage, R_2 is the cathode bias resistor and C_1 the cathode by-pass condenser. R_3 is the plate load resistor and C_2 the plate by-pass condenser. R_{12} is a plate decoupling resistor.

To get push-pull output for the 6L6's in the final stage, the second tube, the 6N7 double triode, is used as a phase inverter as well as voltage amplifier. The output of the 6C5 is fed through C_6 to the grid of the first triode section of the 6N7; the plate of the same section is coupled through C_8 to one 6L6 grid and part of the voltage developed also is fed to the grid of the second triode section of the 6N7 through C_7. Not all of the audio voltage is used for this purpose; C_7 is tapped down on the first-section plate load resistor so that the actual audio voltage applied to the second-section grid is the same as that applied to the first-section grid directly from the 6C5. The first-section plate load resistor actually consists of two resistors, R_6 and R_{11}, in series; the values of these resistors have been determined experimentally to give the correct voltage for the second-section grid and should be followed carefully. C_4 is the plate by-pass condenser for the first triode section of the 6N7 and R_{13} a plate decoupling resistor. R_7 and C_3 are the plate load resistor and plate by-pass condenser for the second triode section. R_4 and R_8 are the usual grid-leak resistors, and R_5 is the 6N7 cathode resistor. This resistor preferably should not be by-passed, since some negative feedback helps to equalize the outputs of the two triode sections and thus stabilizes the performance.

In the 6L6 stage, C_8 and C_9 are the grid coupling condensers and R_9 and R_{10} the grid leaks. A semi-variable resistor, R_{14}, provides cathode bias for the 6L6's. The actual value of cathode resistance in use is about 165 ohms, a setting determined experimentally to give optimum performance. The plates of the 6L6's are connected to a push-pull output transformer, T_2. The screens are by-passed by C_4. To provide appropriate voltages for the various tube elements, a voltage divider consisting of R_{15} and R_{16} in series is connected across the "B" supply.

It is rather important that the circuit values be duplicated exactly if optimum performance is to be secured. In this connection, two rather important points should be observed: C_4 must be at least 8 μfd. to avoid hum troubles, and no decoupling resistor should be used in the plate circuit of the second triode section of the 6N7. In the original circuit arrangement tried, a decoupling resistor installed in this position was found to cause motor-boating rather than cure it, while a rather strong hum was eliminated by replacing a 2-μfd. condenser used originally at C_4 with an 8-μfd. unit.

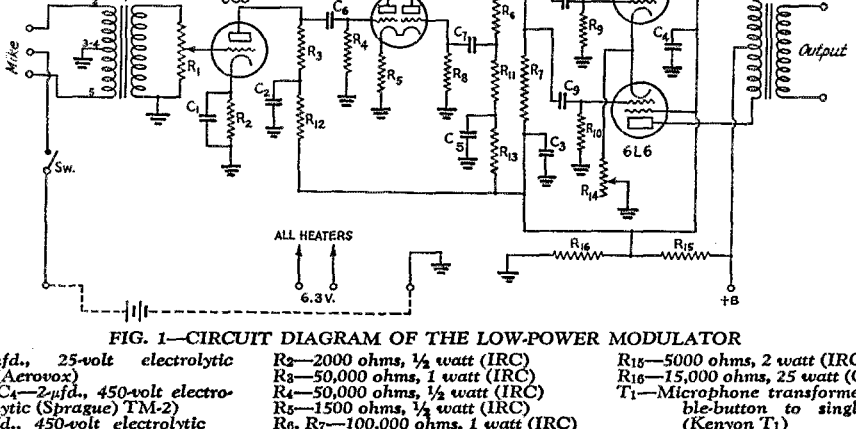

FIG. 1—CIRCUIT DIAGRAM OF THE LOW-POWER MODULATOR

C_1—*10-μfd., 25-volt electrolytic (Aerovox)*
C_2, C_3, C_4—*2-μfd., 450-volt electrolytic (Sprague) TM-2)*
C_5—*8-μfd., 450-volt electrolytic (Sprague TM-8)*
C_6—*0.1 μfd., 400-volt paper (Aerovox)*
C_7, C_8, C_9—*0.03 μfd., 400-volt paper (Aerovox)*
R_1—*500,000-ohm potentiometer (Yaxley Y500MP)*
R_2—*2000 ohms, ½ watt (IRC)*
R_3—*50,000 ohms, 1 watt (IRC)*
R_4—*50,000 ohms, ½ watt (IRC)*
R_5—*1500 ohms, ½ watt (IRC)*
R_6, R_7—*100,000 ohms, 1 watt (IRC)*
R_8, R_9, R_{10}—*100,000 ohms, ½ watt (IRC)*
R_{11}—*7500 ohms, ½ watt (IRC)*
R_{12}, R_{13}—*10,000 ohms, ½ watt (IRC)*
R_{14}—*200-ohm adjustable, 10 watt (Electrad)*
R_{15}—*5000 ohms, 2 watt (IRC)*
R_{16}—*15,000 ohms, 25 watt (Ohmite*
T_1—*Microphone transformer, double-button to single grid (Kenyon T_1)*
T_2—*Output transformer, 6L6's to 5000-ohm load (Kenyon T453)*
Sw—S.p.s.t. switch, mounted on gain control, R_1 (Yaxley)

CONSTRUCTION

The photographs show the construction of the modulator. Referring to the general view, the microphone transformer, T_1, is mounted at the

left front corner of the chassis and the output transformer, T_2, at the rear right corner. The 6C5 is directly behind the microphone transformer; between the 6C5 and T_2 is the 6N7. The two 6L6's are at the front of the chassis at the right. The gain control is at the left-hand edge of the chassis.

The bottom view shows how the various parts are placed under the chassis. The volume control, R_1, has the microphone switch, *Sw*, mounted on it so that when R_1 is turned to the zero position the microphone circuit is opened. The three plate by-pass condensers, C_2, C_3 and C_5, are mounted on the chassis near the upper center in the photograph; the similar condenser at the upper right is C_4, the screen by-pass.

The 6C5 and 6N7 sockets are at the lower left in the bottom-view photograph. The various condensers and resistors are placed as closely as possible to the tube socket prongs to which they connect, use being made of insulating lugs wherever necessary. The plus "B" connections for these two stages are brought to a multi-lug strip on which the decoupling resistors also are mounted. This strip is visible in the photograph just above the two tube sockets. The cathode resistor and cathode by-pass condenser for the 6C5 are just below the sockets. Power supply leads are brought through a 4-wire cord which terminates in a lug strip near the bottom center in the photograph. The voltage divider resistors R_{15} and R_{16}, and the 6L6 cathode resistor, R_{14}, are along the right-hand edge. All ground connections are made directly to the chassis.

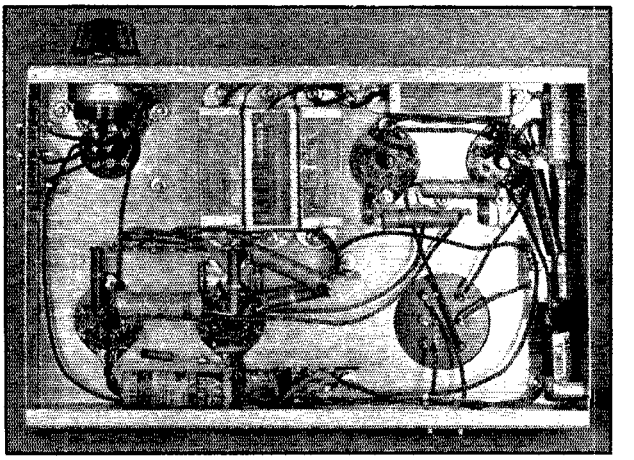

A VIEW UNDERNEATH THE CHASSIS OF THE MODULATOR UNIT

A description of the layout is contained in the text.

The chassis is of light steel measuring 11 by 7 by 2 inches. Round holes are cut out to permit the transformer terminals to project through for "upside-down" mounting. A three-terminal connection strip is mounted on the side of the chassis near the microphone transformer to make connections to the microphone cable. A similar two-terminal strip is mounted on the rear edge for output connections from T_2. When used with the transmitter described in the previous issue, the pair of terminals on T_2 intended for a 5000-ohm load should be used. The connections marked "Output" in Fig. 1 should connect to those marked "Mod." in Fig. 1, page 13, December, 1936, *QST*, the "O" terminal on the transformer connecting to the plus-"B" side on the transmitter. This is the only connection between the two units.

TESTING AND OPERATION

The power supply used with the modulator is identical with that described in December *QST* for the transmitter. Under full load the output voltage will be approximately 380 with an 83-V rectifier. The total "B" current taken by the modulator should be approximately 140 milliamperes with no sound input to the microphone, and should rise to about 150 ma. at full output on speech. This test should of course be made with the transmitter connected and operating, since the plate current to the 6L6's will not rise if there is no load on the modulator. If the current is more or less than 140 ma. with no speech input, the resistor R_{14} should be adjusted to obtain the correct current value.

Before attempting to use the modulator directly on the transmitter it is a good plan to test it on a resistance load, using a 5000-ohm, 25-watt resistor connected across the output terminals. A pair of headphones may be tapped across about 500 ohms of the resistor, if the resistor is of the type having a sliding tap, or a second resistor of a few hundred ohms may be connected in series with the load resistor to form a voltage divider across which the headphones may be connected. It is not advisable to connect the phones directly across the load resistor because the audio voltage is too high for safe operation. With another person speaking into the microphone in a normal tone, the gain control should be advanced to the point where distortion just begins to be perceptible, then retarded to the point where no distortion is apparent. Under these conditions the total "B" current taken by the modulator should vary about as described above. The headphone test also will readily uncover hum, noise, or other troubles, although if the specifications are followed carefully the performance should be entirely satisfactory from this standpoint. The

(Continued on page 110)

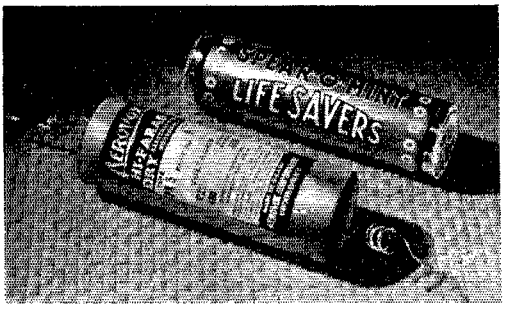

Compact Goodness

Light and compact. Completely sealed.

●

Bare wire leads 2½" long.

●

25, 50, 100, 200 and 450 v. working.

●

2 to 50 mfd.

●

Lots of capacity and voltage for little money.

AEROVOX Type PR tubular electrolytics fit anywhere. You can bank on them. They won't let you down. Yet they cost so little!

DATA . . . .

Latest catalog covers a most complete line of condensers and resistors.

AEROVOX CORPORATION
70 Washington St. Brooklyn, N. Y.



BIRNBACH INSULATORS

ARE SPECIFIED BY LEADERS

When leading designers lay out their new rigs they naturally specify parts that can "stand the gaff" yet are priced right. It's no wonder, therefore, that most designers specify Birnbach because Birco products give you the highest possible quality at the lowest possible price.

Improved Cone Standoff Insulators

Made of STEATITE, the better ceramic. Complete range of heights. Condenser, coils, tube sockets, etc., can be mounted with minimum labor. White glaze.



No.	Heights	List
430	⅝"	10c
431	1 "	15c
431J	1 "	20c
432	1½"	20c
432J	1½"	25c
433	2⅛"	25c
433J	2¾"	50c

NEW TRANSMITTING SOCKETS



- Side Wiping Contacts
- Brass, Nickel Plated Shell
- Highly Vitrified, Low Absorption Base
- All Brass Hardware ● Low Prices

No. 434, 50 watt $1.25 List ea.
No. 435, 10 watt 90c List ea.

SPECIAL LOW PRICES in Large Quantities

BIRNBACH RADIO CO. INC.
145 HUDSON ST. BIRCO NEW YORK, N. Y.

I. A. R. U. News

(*Continued from page 55*)

Poland: P. Z. K., Bielowskiego 6, Lwow.
Puerto Rico: Francis M. McCown, Family Court No. 7, Santurce.
Portugal: R. E. P., Rua Dos Sabarteiros 159–3, Lisbon.
Rumania: Victor Cantuniari, Str. Matei Basarab, 3 bis Buchresti IV.
Salvador: J. Frederico Mejia, 7a Calle Poniente 76, San Salvador City.
South Africa: S.A.R.R.L., P. O. Box 7028, Johannesburg.
Spain: U.R.E., Apartado 262, Madrid.
Sudan: c/o Frank H. Pettitt, Catholic Club, Mustapha Barracks, Alexandria.
Sweden: S.S.A., Stockholm 8.
Switzerland: U.S.K.A., Neu Allschwil near Basle.
Tanganyika: *see* Kenya.
Uganda: *see* Kenya.
Uruguay: U.S.W.C.G., Box 37, Montevideo.
U.S.S.R.: C.B.S.K.W., I Samoteahny, 17, Moscow.
Venezuela: R.C.V., Torre a Madrices No. 8, Caracas.

Strays

Amateurs using phase-inverting amplifiers, or contemplating using them, will be interested in the June, 1936, issue of the *Aerovox Research Worker*, which deals with this subject. Because of increasing interest in inversion, additional copies have been printed and upon request will be sent by the Aerovox Corporation, 70 Washington Street, Brooklyn.

—···—

W9SRS writes that a strong but inexpensive antenna rope can be made by treating heavy cotton fish cord, which can be obtained from any dealer handling fish-line supplies. The size used by W9SRS is about the thickness of an ordinary lead pencil. The treatment consists of immersing the cord in two pints of rubber auto-top dressing, using a gallon paint can having a tight-fitting lid. First coil the rope carefully in the can, then pour in the top dressing, cover tightly and let set for at least twenty-four hours.

To dry, pull out the top end of the rope and attach it to a post or tree, walk back with the can and the rope will pull out with no tangling. Stretch tightly and tie the other end to another post and let the rope dry. When dry, the rope will be quite flexible and much stronger than before treating, as well as practically waterproof. W9SRS has used such a rope for over two years, and recent examination indicated that it was apparently as strong as when new.

A Modulator for the Low-Power Five-Band Transmitter

(*Continued from page 15*)

hiss which is characteristic of a carbon microphone is not amplifier noise, of course; cutting off the microphone battery by means of *Sw* will show how much of the residual background is caused by microphone hiss and how much is generated in the amplifier itself. The latter should be negligible. Occasionally a microphonic tube will cause noise and howling; this can be checked by tapping

FOR AMATEURS ONLY

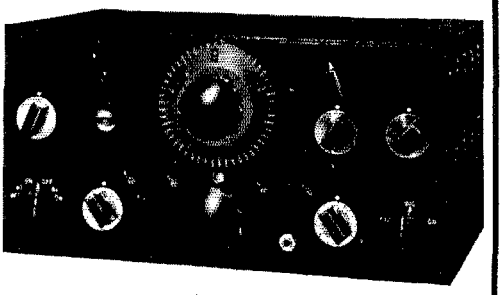

The new National NC-101X was designed for the amateur bands only. Has all the features of the NC-100X. Complete bandspread for the 10, 20, 40, 80, and 160 meter bands. With crystal, all tubes, built-in power supply, and 10" dynamic speaker chassis. Net to amateurs **$129.00** All other receivers in stock.

NATIONAL · HALLICRAFTERS
RME · HAMMARLUND · RCA

Trade in your old receiver — liberal allowance!

VALUES FOR HAMS!

National CRM oscilloscope	$11.10
RME DB-20 preselector	42.60
Triplett modulation monitor	24.83
The new RCA Aerodynamic microphone	15.90
Thordarson ham special T-6878, 600 volts each side of C.T. 200 ma. 7½ volts, 3 amps.; 2½ volts, 10 amps.; 5 volts, 3 amps	2.45
Stancor plate transformer — 1000–750–500 volts each side of C.T. — 300 ma.	5.75
Stancor Class "B" transformers for 6L6's — Input $2.17 Output	5.00
Unmounted power crystals — guaranteed — 40 meters	1.95
80, 160 meters	1.50

Bliley crystals — BC3, **$3.95**, LD2, **$4.80**, HF2, **$6.50**; VF1, **$8.00**. A variety of frequencies in stock.

ALL TAYLOR TUBES IN STOCK

T-20, **$2.45** T-55, **$8.00** 866 Jr., **$1.00** 866, **$1.65**

866A tube	$.98
866 filament transformer	1.16
Sylvania 211C — heavy duty — guaranteed	6.75

Write for information on the new Thordarson Multimatch Modulation Transformers — we have the complete line in stock

All mail orders promptly filled

FREE AMATEUR HANDBOOK!

Last month we offered free Stancor Amateur Transmitter Handbooks. The response was so gratifying that we now repeat the offer! If you have not already written in for the book of amateur transmitter circuits, why not send for your copy now? **It's FREE!**

SUN RADIO COMPANY

227 FULTON STREET NEW YORK CITY

SUN RADIO CO., DEPT. B5
227 Fulton Street, New York City

Please send me FREE copy of Stancor Transmitter Handbook

Name.....

PRINT ADDRESS IN MARGIN BELOW

each tube with the finger or a pencil while listening to the output of the amplifier with the microphone off. A pronouncedly microphonic tube should be replaced.

The recommended button current for the type of microphone specified is 3 to 5 ma. per button, with a maximum limit of 10 ma. Although a 3- or 4.5-volt battery with a 200-ohm potentiometer connected across it could be used to control the microphone current, we have found it satisfactory simply to use a single No. 6 dry-cell battery for the source of microphone current, no adjustment being needed.

The modulator unit always should be grounded, using a connection between the chassis and a good ground connection such as a cold water pipe or the radiator of a hot-water heating system. Such a ground often will reduce hum, and will prevent motorboating and howling when the transmitter is in operation by reducing r.f. pickup. The microphone cable should be shielded, with the shield grounded to the chassis; an unshielded cable is prone to pick up r.f. and cause overloading and distortion, if not oscillation, in the audio amplifier.

When the various tests and precautions described above have been carried out, modulation of the transmitter is simple. The r.f. end may be placed in operation on a suitable frequency and the antenna loading adjusted to make the final r.f. stage take 80 milliamperes, with all circuits adjusted to resonance. Under these conditions the input is approximately 30 watts, with the power supply described in December *QST*, and the load presented to the modulator by the modulated r.f. stage is for all practical purposes correct in value. If a current indicator such as a low-range r.f. ammeter or a shunted flashlight bulb is used in the antenna circuit, the current should rise slightly—about 10% or so—when the microphone is spoken into. First adjust the modulator gain control so that with normal speaking the plate current of the final r.f. stage shows a slight flicker, then retard the control slightly so that the plate current is steady under modulation. The correct adjustment will permit attaining 100% modulation on the voice peaks, which is the limiting operating condition.

The modulator design is such that when an attempt is made to secure more than sufficient output for 100% modulation by running up the gain, distortion commences so that no particular benefit is secured. Drastic overmodulation such as can usually be obtained with a Class-B modulator is practically impossible with the Class-A system because the 6N7 driver output flattens off immediately when the 6L6 grids start to draw current—which they do when the 15-watt output level is exceeded. This means that distortion starts suddenly and increases very rapidly, a condition which is readily recognized by the receiving operator, and can be checked easily at the transmitter by the use of a listening monitor such as a pickup coil, crystal detector and headphones, or a similar arrangement using a rectifier tube.

Class-B Audio Driver Considerations

Determining Power Requirements and Transformer Characteristics for Low Distortion

By Douglas Fortune,* W9UVC

A GREAT deal has been written about Class-B audio, but somehow very little has been said about the driver stage, which is called upon to deliver perfect quality to the Class-B grids. Since the performance of an otherwise perfect Class-B stage may be impaired by an inadequate driver or by an improperly-designed driver transformer, it is the purpose of this article to point out some of the important points to be considered in the design of a driver stage.

A Class-B audio stage operates with two tubes in push-pull, biased almost to cut-off so that, at any one instant, only one tube supplies power to the output load. In order to operate the Class-B stage efficiently, the grids are driven positive by a certain amount, depending upon the plate voltage of the tube, the plate-to-plate load, the desired power output, and the permissible distortion. Since the grids are driven positive, grid current flows and a certain amount of power—which must be supplied by the driver stage—is dissipated in the grid circuit. This grid current is not a linear function of the grid voltage. At some positive value of the grid signal voltage E, the grid current may be 5 ma.; if the signal voltage is increased to $2E$, the grid current may be 15 or 20 ma., depending upon the actual value of E and upon the plate-circuit conditions. The grid circuit may be compared to a variable impedance which decreases in value as the grid voltage increases. The driver, then, must supply power to a varying load, and if the Class-B grids are to be driven properly, this driving power must be supplied in such a way that the grid voltage does not drop appreciably as the power taken by the grid circuit increases. In other words, the source of power must have good regulation.

Actually, the driving source is not perfect. However, with suitable driver tubes and with a properly-designed transformer, it is possible to obtain a driving source with sufficiently good regulation for satisfactory operation. Just as the load line of only one tube is considered in determining Class-B output, similarly the grid circuit of only one tube needs to be considered in calculating the driving power. In Fig. 1 is shown the equivalent circuit of a single Class-B grid. The driver stage may be considered a source of voltage E of perfect regulation which supplies power through $\frac{2R_p}{N^2}$, the equivalent resistance of the driver tubes. R_t is the resistance introduced by the driver transformer, which is usually small, and R_g is the instantaneous impedance of the grid circuit, which varies from an infinite (in the case of Class-B tubes operating with fixed bias) to a very definite value. In order to maintain the voltage E_g constant regardless of the value of R_g, the resistance $\frac{2R_p}{N^2}+R_t$ must be small compared to R_g. The actual value of $\frac{2R_p}{N^2}$ is the driver tube plate impedance referred to one-half the secondary; and in the case of a push-pull driver, it is

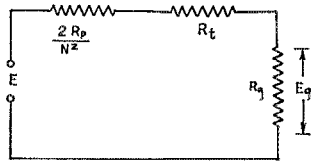

FIG. 1—EQUIVALENT CIRCUIT OF ONE CLASS-B GRID

E is the audio-frequency voltage developed by the driver tubes referred to one side of the transformer secondary, E_g the voltage acting at the Class-B grids, R_g the grid impedance of one Class-B tube, R_t the resistance of the transformer (with primary referred to one side of the secondary), and $\frac{2R_p}{N^2}$ the driver plate resistance referred to one side secondary.

equal to the plate resistance of both tubes divided by the turns ratio squared of the driver transformer. This ratio is figured from the total primary to one-half the secondary. It may be seen that in order to reduce the resistance of the source, the driver tubes must have low plate resistance, the driver transformer should have as high a step-down ratio as possible, and the ohmic resistance of both the primary and the secondary of the driver transformer should be small.

It is the function of the driver transformer to reflect into the plate circuit of the driver tubes a load of such value that the required driving power is just developed with full excitation to the driver grids. If this is done, the driver transformer will have as high a step-down ratio as is consistent with delivering the necessary voltage to the Class-B grids. If the step-down ratio is too great,

* Thordarson Electric Mfg. Co., Chicago.

the driver plate load will be so high that the required driving power for the desired power output cannot be developed, and as a result the Class-B output will be low. If, on the other hand, the step-down ratio is too low, the Class-B output will be high, but the driver regulation will be poor because of the decrease in the value of N^2 in Fig. 1.

It is necessary in the design of a Class-B stage with a relatively small driver to make a compromise between power output and distortion. Distortion will result if the maximum output of

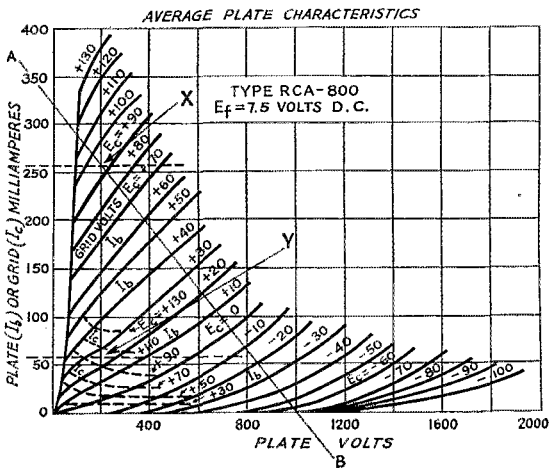

FIG. 2—CHARACTERISTIC CURVES OF THE TYPE 800 TUBE, USED AS AN EXAMPLE IN THE TEXT

the driver stage is about the same as the required Class-B driving power. In this case, to lower the distortion it is necessary to use a driver transformer with a higher step-down ratio and to reduce the Class-B output. On the other hand, if maximum Class-B output with low distortion is desired, a larger driver stage is required. Usually if the driver stage is capable of delivering about three times the required driving power, the regulation will be good. If the grid impedance does not change appreciably, the distortion will be low; however, this condition usually arises when the ratio of minimum plate voltage to positive grid voltage is relatively high, and thus the tubes are not operating under conditions of maximum power output. If more power output is desired, the grids are driven harder by a transformer with a lower step-down ratio and more distortion results, not only because the equivalent resistance of the driving source has been increased but also because the grid impedance has decreased.

In Fig. 2 are shown the plate and the grid characteristics of the Type 800 tube. The driving power required for an output of 100 watts may be calculated from the curves given. The plate-to-plate load for this condition is 12,500 ohms, the plate voltage 1000 volts, and the bias 55 volts. The load line corresponding to 12,500 ohms is shown at AB. Since the power output is 100 watts, the dynamic peak current is found to be 252 ma. from $\frac{I^2R}{2}=100$, in which R is 3125 ohms. The required positive grid voltage is found at the point X, the intersection of the load line AB and 252 ma. This is approximately +95 volts. If the line XY is followed, it will be found that at the point Y, where the grid voltage is 95 volts, the grid current is 55 ma. Since the tube is biased negatively 55 volts, the total secondary swing is 55+95 or 150 volts, and the peak driving power is 150×.055 or 8.25 watts. The approximate average driving power is 4.12 watts—approximate because the grid impedance is not constant over the entire cycle.

Obviously, there are many audio stages which can deliver a peak power of 8.25 watts; however, economic reasons dictate the use of the smallest tube which will give satisfactory results. A good power tube on the market at the present time is the Type 2A3, which has a plate resistance of only 800 ohms. A pair of Type 2A3 tubes in push-pull, then, is the logical choice to be used as drivers for the Type 800 tubes. The turns ratio of a suitable transformer to couple two Type 2A3 tubes in push-pull to the grids of the Type 800 tubes in Class-B can be calculated from the curves given.

In the following discussion the driver tubes are assumed to be operating strictly Class-A, and the maximum excitation to the drivers is just below the point of grid-current flow. The plate voltage of the Type 2A3 tubes is assumed to be 300 volts and the grid bias −62 volts. The peak power developed in the primary of the driver transformer is approximately

$$2R_L\left(\frac{\mu E_g}{R_p+R_L}\right)^2$$

in which μ is the amplification factor of the tube (in this case 4.2), E_g is the peak grid swing (62 volts), R_p is the plate resistance of one tube (800 ohms) and R_L is one-half the plate-to-plate load on the drivers. If the power is assumed to be equal to 8.25 watts, the value of R_L is found to be approximately 14,500 ohms.

The peak voltage developed across the total primary is:

$$2R_L\frac{\mu E_g}{R_p+R_L} \text{ or } 492.5 \text{ volts}$$

and the turns ratio of the driver transformer, total primary to one-half the secondary, is

$$\frac{492.5}{150} \text{ or } 3.28{:}1.$$

The regulation of the driver stage may now be figured. The maximum voltage which can be

(Continued on page 88)

DEPENDABLE!
GROSS CP-55 *and* CB-55 TRANSMITTERS
"BUILT LIKE A BATTLESHIP"

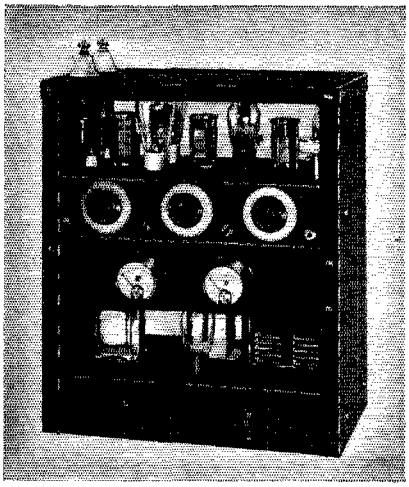

• Full 95 Watts input • New Taylor T20 tubes • Ten Meter operation • Built-in power supply • For operation on 10-20-40-80-160 meters • 3 stages, 42 Osc, 6L6 buffer, 2-T20's in final

KIT $42.70

LESS TUBES, METERS, CRYSTAL — One set coils included in price

The "CP-55" uses the marvelous new T-20's in the output stage. These real transmitting tubes will give outputs and performance not possible with ordinary receiving tubes — their price is very low.

The ideal unit for the beginner or the "Old Timer" desiring an additional Transmitter for operation on 10 meters, or any other band. In the CP-55 you have available an Xmitter having real power at a marvelously low price.

Compare the construction of the "CP-55" with units selling at many times its price. Only finest components are used such as Cardwell Condensers, Steatite Sockets, IRC Resistors, Cornell-Dubilier and Aerovox Condensers, etc.

The CP-55 is converted into a fine RADIOPHONE TRANSMITTER by merely adding an available modulator unit.

Descriptive Bulletin on Request

"CW-55" RF Unit only as used in the CP-55 including one set coils, less tubes, xtal, meters. Kit **$18.95**

Two full size surface type meters..... **$7.00**
Coils, any amateur band listed in features, per set..... **2.85**
Kit of Matched tubes for RF Unit..... **6.60**
One 83 Tube for power supply..... **.65**

"CB-55"
The Radiophone version of the "CP-55" — Also sensationally low priced
ALL BANDS INCLUDING 10 METERS
Bulletin gives Details

GROSS RADIO, INC.
51 VESEY STREET NEW YORK
***Cable Address:* GROSSINC**

output section be carefully adjusted with correct regard to the rest of the circuit.

This "matching" process is rather tedious. There are three variables; the capacity variation of the selectivity control condenser, C_1; the output coupling capactiy, C_5; and the position of the tap on the output coil. The first can be readily controlled by fixed shunt condensers, C_2 and C_3, which, at the same time, serve to provide the center tap for the input coil and to constitute two arms of the crystal bridge. The necessity for a split-stator variable condenser or a center-tapped input coil is eliminated and construction is correspondingly simplified. The output coupling capacity, C_5, must be adjusted to provide the proper terminating load in conjunction with the output coil. It must not be too large, however, or the rejection characteristic will be adversely affected.

With all circuit constants set for optimum performance, the characteristics of the filter as a whole are as shown in the curves of Figs. 2 and 3. It may be seen that selectivity is variable over an even greater range than was anticipated. In this connection, it should be remembered that the curves show overall i.f. characteristics which include the fixed selectivity of the three i.f. transformers. Although not indicated by the curves, the gain of the filter stage *increases* with narrowing band width—a very desirable characteristic, since it compensates to some extent for side band cutting in 'phone reception and, furthermore, gives added gain just where it is wanted, the signal-to-noise ratio being greatest at maximum selectivity.

Class B Audio Driver

(Continued from page 27)

developed across the primary of the driver transformer is $2\mu E_g$ or 520 volts. The actual value of the voltage at the rated Class-B output is 492.5 volts. The regulation, then, is $\frac{520-492.5}{492.5}$ or 5.6 per cent, which is a usable value. It is of interest to note that if the plate voltage on the Type 2A3 tubes is 250 volts and if the bias is 45 volts, the driver transformer turns ratio is 2.25:1; and the driver regulation is 11.8 per cent or only half as good as when the Type 2A3 tubes operate at 300 volts. No allowance has been made for driver transformer efficiency. To allow for this, the step-down turns ratio should be decreased by about 5 per cent.

No allowance has been made for the cancellation of plate circuit distortion by the introduction of an equivalent series impedance in the class "B" grid circuit. The assumption is made that the given class "B" plate-to-plate load is optimum so far as plate circuit distortion is concerned.

A great deal has already been written of the actual physical construction of the driver transformer. Therefore, suffice to say that the transformer should have interleaved windings, so arranged that the coupling from either half of the primary to either half of the secondary is identi-

NEW SQUARE METERS
ESPECIALLY ADAPTED
TO AMATEUR USE

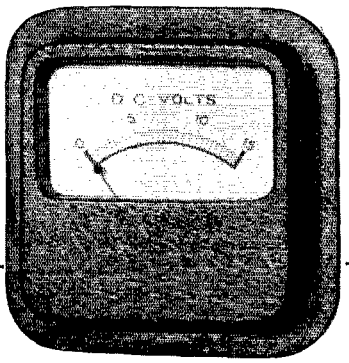

Model
95

Case Size: 2 9/16" x 2⅝", ⅜" in Front of Panel; 7/16" Back of Pane

Voltmeters, ammeters, milliammeters, in all popular ranges — A.C. and D.C.

Inexpensive instruments, thoroughly reliable for many applications in amateur radio

Ruggedly Constructed *Dependable* *Low Cost*

For more information and prices See Your Jobber or Write

READRITE METER WORKS 925 College Dr. Bluffton, Ohio

MIMS
SIGNAL SQUIRTER
ROTARY BEAM ANTENNAS
20 and 10 Meters Only

ORDER NOW . . .
BE READY FOR WINTER

By Horizontal Rotation
Better Transmission
Vertical Concentration
Improved Reception with a Revolution to Desired Direction

Signal Squirters are fun. The test is to ask the fellow using one. Better still — see for yourself. Ask for QRA of one nearest you.

"Put Your Signal Where You Want It When You Want It There"

Write for Bulletin SS2

MIMS RADIO COMPANY
M. P. MIMS—W5BDB, P. O. Box 504, Texarkana, Ark.

cal. The primary inductance should be designed on the basis of an unloaded transformer, since with biased Class-B tubes the driver tubes operate into an infinite load during part of the cycle.

In conclusion, by proper design of the driver transformer and with driver tubes of adequate power capabilities, the distortion introduced by the driver stage may be held to a very low value.

Circuit Equalizing to Improve Receiver Performance

(*Continued from page 38*)

a long and laborious process; that the first part is unnecessary; that the observations are self-evident. Upon closer observation and further study, it will be found that besides pruning the inductances so that $L_1 = L_2 = L_3$, we have also been making variations such that $C_{T1} = C_{T2} = C_{T3}$. Neither L_1 nor C_{T1} can be measured directly by the home constructor. Instead, the effect on frequency that changes in L_1 and C_{T1} and C give, enable us to determine which one must be changed; and what is more important, in what direction the change must be made.

The accuracy of the method is such that any home constructor can equalize inductances and feel positive that values finally obtained are just as close as can be found in the best receivers available.

With the Affiliated Clubs

(*Continued from page 34*)

banquet, where prizes were distributed to winners of the various events. . . . The Peninsula Amateur Radio Club, Newport News, Va., observed the A.R.R.L. Field Day on June 20th by staging a hidden transmitter hunt. W3AKN/3 was set up on 3635-kc. about ten miles north of Newport News. Five groups in cars equipped with direction finding apparatus took bearings between 1:00 and 5:30 P.M. and plotted on maps for the location of the transmitter. The Newport News and Hampton groups were adjudged first and second winners respectively. Refreshments were served at the conclusion of the hunt. . . . The annual hamfest and banquet of the Electric City Radio Club, Scranton, Pa., was held in that city on May 23d. A trip through an anthracite coal mine started the program at 12:30 P.M.; festivities did not conclude until 10:30 P.M. Good speakers, good food, good prizes made the affair interesting. . . . In conjunction with the annual University Engineer's Day, May 11th, the Colorado University Radio Club held its fifth annual hamfest. An exhibit of radio apparatus built by amateurs was displayed, and the day was climaxed by a picnic in the mountains. 56-Mc. transceivers were in operation from the display room and automobiles in the vicinity. . . . The Annual Spring Meeting of the Tri-County Radio Association, Inc. (Plainfield, N. J.) took place on the evening of April 12th with more than 100 in attendance. Speakers of the evening were W2ICU and W1QP. . . . The South Hills Brass Pounders & Modu-

A 10-Watt Speech Amplifier With Voltage-Regulated Plate Supply

High-Gain Unit for Use with Crystal or Carbon Microphones

By George Grammer*

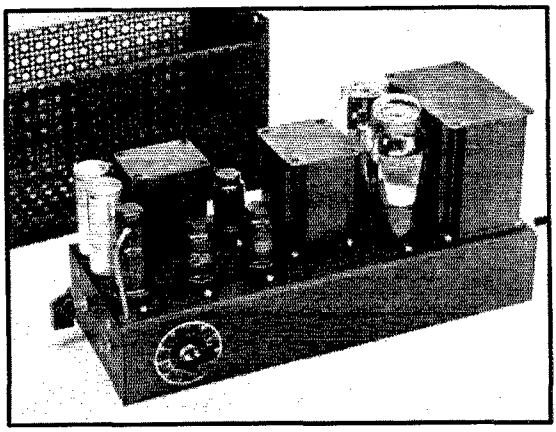

THE 10-WATT SPEECH AMPLIFIER WITH COVER REMOVED

This four-stage amplifier can be used with either crystal or double-button carbon microphones. The output stage uses Class-AB 2A3's.

IN the article on voltage-regulated plate supplies in our August issue [1] it was pointed out that because of the regulating action the effective output impedance of such a supply is extremely low, being comparable to that of "B" batteries. When applied to audio amplifier systems, the effect of low output impedance or low internal resistance in the plate supply is to reduce the possibility of oscillation arising as the result of a common impedance in the plate circuits of several stages. In other words, motorboating is less likely to occur when a low-resistance supply is used.

This factor, together with low ripple content in the output, make the voltage-regulated supply an especially desirable unit for use in conjunction with high-gain speech amplifiers. It is the purpose of this article to describe the practical application of such a supply to a universal speech amplifier or driver capable of developing an audio output of ten watts, suitable for working into a Class-B modulator or as a public-address amplifier.

* Assistant Technical Editor.

[1] "Battery Performance from the R.A.C. Power Supply," *QST*, August, 1937.

[2] Lund and Howe, "Considerations in Speech Amplifier Design," *QST*, January, 1936.

THE SPEECH AMPLIFIER

The speech amplifier, the circuit of which is given in Fig. 1, is designed to have ample gain for diaphragm-type crystal microphones. The input circuit also is arranged so that a double-button carbon microphone can be used, working into a resistance load.[2] The switching arrangement permits using either type of microphone without cutting a stage in or out to handle the widely different output levels of the two types.

Aside from the microphone input, the tube and circuit line-up is quite conventional. The first tube is a 6J7 pentode, resistance-coupled to a 6C5, with the gain control in the grid circuit of the latter tube. The 6C5 is resistance-coupled into a single-ended to push-pull audio transformer which feeds the grids of a pair of 6C5's. These in turn are transformer-coupled to the power output tubes, a pair of 2A3's which operate Class-AB with self-bias. With this type of operation the tubes are rated at 10 watts output; substitution of fixed bias will raise this figure to 15 watts if the increase in output is desirable.

Straight transformer coupling out of the second

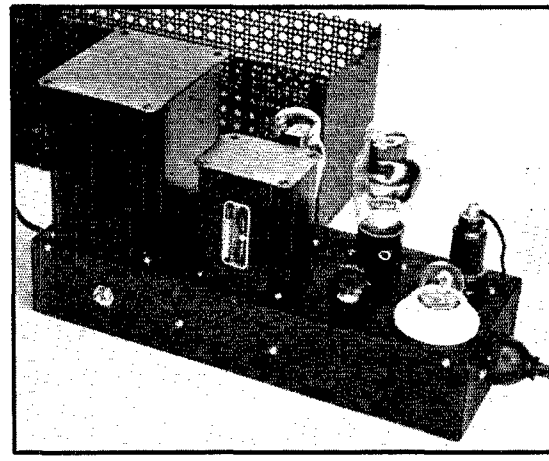

THE POWER SUPPLY, EQUIPPED WITH A VOLTAGE REGULATOR FOR THE LOW-LEVEL STAGES

With the cover on, this unit matches the amplifier. It would also make an excellent power supply for receivers, especially those having Class-AB output.

stage will raise the overall voltage gain somewhat, but simultaneously reduces the low-frequency response. In view of the fact that there is plenty of gain with the resistance coupling as shown in the diagram, we preferred to keep the d.c. out of the transformer primary. In the plate circuits of the first two tubes are RC circuits (R_6C_7 and $R_{10}C_8$) which serve both as decoupling circuits and as additional power-supply filter for the low-level stages. The cathode bias resistor for the 2A3's is contained in the power-supply unit.

Top and bottom views of the speech-amplifier unit are given in two of the photographs. The chassis is 5 by 13½ by 2½ inches, made of black-crackled steel and provided with a perforated metal cover which fits over all the equipment. The 6J7, with a shield cap fitting over the top, is at the left front. Directly behind it are condensers C_7 and C_8. Next along the front is the first 6C5 with T_1 behind it; then the push-pull 6C5's, T_2, the 2A3's, and the output transformer, T_3. The latter is a plate-to-line transformer designed for coupling out of Class-AB 2A3's, with taps for lines of various standard impedances. On the primary, the 5000-ohm (plate-to-plate) terminals should be used with self-bias operation. The input transformer, T_2, preferably should be of the type designed to carry grid current with 2A3's, although grid current does not actually flow except at nearly full output.

The gain control, R_7, is mounted on the front edge of the chassis between the 6J7 and first 6C5. On the left edge in the front view are the jack for a crystal microphone and the switch, S. Carbon microphone and battery connections are made to a five-terminal connection strip mounted on the rear chassis edge, at the bottom left in the below-chassis view. No particular precautions need be observed in placing parts and wiring below the chassis except to make sure that all ground connections actually break through the paint to the metal of the chassis.

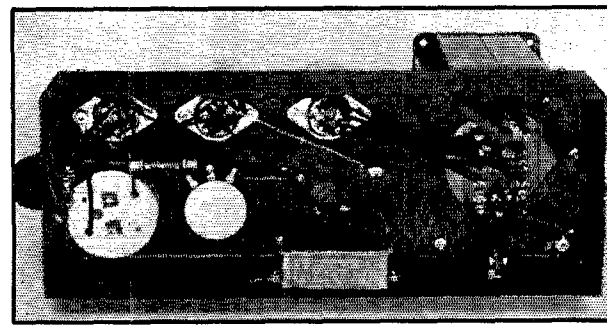

BOTTOM VIEW OF THE POWER SUPPLY UNIT

No special arrangement of parts is necessary. The filter condenser is mounted on one edge of the chassis.

A 7-prong socket at the lower right in the bottom-view photograph brings in all supply voltages. These are marked in Fig. 1. The shielded three-way cable outlet and plug at the right are for the audio-frequency line. A shielded two-wire cable is used, the shield being connected through one pin in the plug to the chassis.

POWER-SUPPLY UNIT

Construction of the power supply is similar to that of the amplifier; the same type and size of chassis is used. The circuit diagram is given in Fig. 2. An ordinary condenser-input filter is used, with the tap for the 2A3's taken off ahead of the regulator section to reduce the load on the latter. The first four tubes in the speech amplifier, however, are fed regulated voltage. The circuit will be

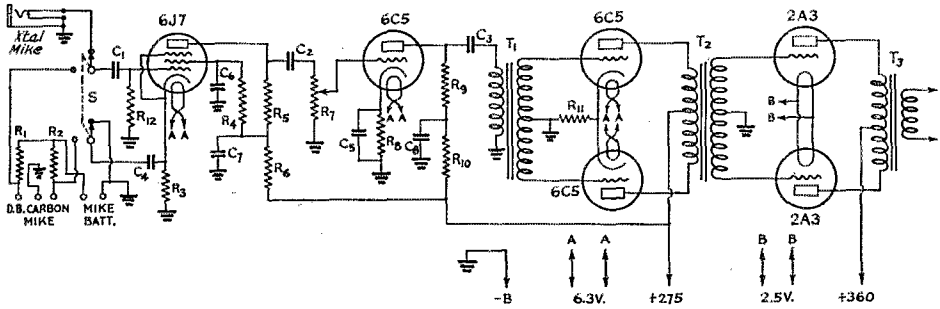

FIG. 1—CIRCUIT DIAGRAM OF THE SPEECH AMPLIFIER

C_1, C_2, C_3—*0.1-μfd. paper, 400-volt.*
C_4, C_5—*5-μfd. 25-volt electrolytic.*
C_6—*0.1-μfd. paper, 400-volt.*
C_7, C_8—*8-μfd. electrolytic, 450-volt (miniature round can type).*
R_1, R_2—*200-ohm, ½-watt.*
R_3—*1000-ohm, ½-watt.*
R_4—*1-megohm, 1-watt.*
R_5—*0.25-megohm, ½-watt.*
R_6—*50,000-ohm, ½-watt.*
R_7—*0.25-megohm volume control.*
R_8—*2000-ohm, ½-watt.*
R_9—*50,000-ohm, 1-watt.*
R_{10}—*10,000-ohm, ½-watt.*
R_{11}—*500-ohm, 1-watt.*
R_{12}—*5-megohm, ½-watt.*
S—*D.p.d.t. midget switch.*
T_1—*Audio transformer, single plate to push-pull grids, total ratio 1:4 (Kenyon T-52)*
T_2—*Audio transformer, push-pull plates to Class-AB grids (Kenyon T-256).*
T_3—*Output transformer, 2A3 plates (5000 ohms) to line (Kenyon T-301).*

recognized as being the same as that in August *QST*. R_3 is the output voltage control; this should be set by means of a voltmeter to give about 275 volts output. R_6 is the cathode resistor for the 2A3's.

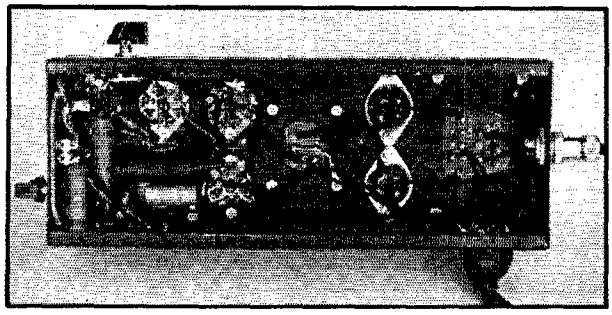

BELOW-CHASSIS VIEW OF THE SPEECH AMPLIFIER

Grid-circuit leads to the 6J7 should be shielded. In operation, the chassis of the amplifier should be connected to a good ground.

With the components specified, the output voltages are as given on the diagram. The terminals marked "360" on the transformer should be connected to the 83-V plates. The cathode current flowing through R_6 develops about 60 volts of bias, leaving 300 for the plates.

The physical layout is shown in the two views of the power supply unit. In the front view, the power transformer is at the left, with the choke next to it. The knob on the top of the chassis operates the voltage control, R_3; this need not be touched after having been set for the proper output voltage. The neon lamp is mounted in a 110-volt socket in the near right-hand corner. The 6J7, 2A3 and 83-V are along the rear edge. The on-off switch in the 110-volt line is mounted on the front edge of the chassis.

All output connections are brought to a 7-prong socket shown on the left edge in the bottom view. This is wired identically with the socket in the amplifier. A 5-wire cable, plus two heavy wires for the 2A3 filament leads, are wired into 7-prong plugs, one at each end, using corresponding pins for each wire. This permits removing the cord from either or both of the units. The reason for using separate wires for the 2A3 filament power is simply that the wire in the ordinary cable is too small to carry the current without excessive drop, when a length of six feet or so is used. It is highly important to measure the actual voltage at the sockets to be sure it is within 5% of 2.5 volts; low filament voltage is sure to result in a drastic reduction in the power output that can be obtained without distortion.

The neon bulb (1-watt size) should have its base resistor removed. The gas-flame method of softening the cement is about the simplest.

OPERATING DATA

Provided the constructor follows the circuit faithfully and makes good connections, no troubles need be anticipated in getting the two units to working properly. The one difficulty we encountered in trying them out was that of low filament voltage on the 2A3's, mentioned above, which was corrected by installing leads of ample cross-section. If an audio oscillator of good waveform [3] and an oscilloscope are available, the amplifier may readily be checked for distortion, and the power output likewise can be checked by connecting a resistor of the same value as the output impedance chosen across the output terminals. Measurement of the a.c. voltage developed (a rectifier-type meter should be used) will give the power output $\left(P=\frac{E^2}{R}\right)$ using the

(*Continued on page 116*)

[3] Waller, "Amateur Applications of the 'Magic Eye,'" *QST*, October, 1936.

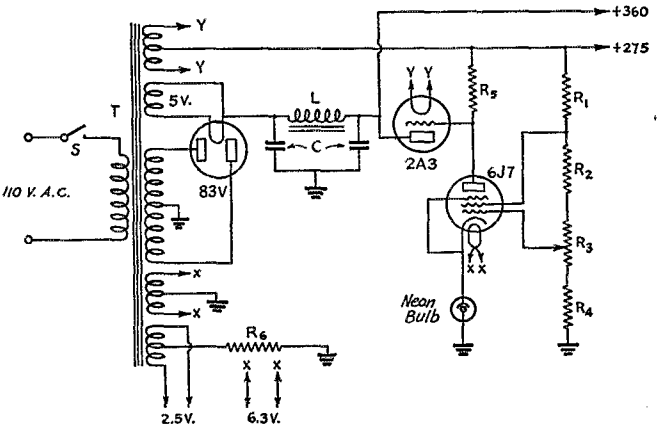

FIG. 2—POWER SUPPLY DIAGRAM

L—15-henry, 165-ma. filter choke (Kenyon T-154).
C—8-8-μfd., 450-volt electrolytic (cardboard box type).
R_1—10,000-ohm, 1-watt.
R_2—20,000-ohm, 1-watt.
R_3—10,000-ohm volume control.
R_4—5000-ohm, 1-watt.
R_5—0.5-megohm, 1-watt.
R_6—800-ohm, 10-watt.
S—S.p.s.t. toggle switch.
T—Power transformer; h.v. winding, 360 volts each side c.t., 150 ma.
5 volts, 3 amp. (rectifier filament)
2.5 volts, 3 amp. (2A3 regulator tube)
2.5 volts, 5 amp. (2A3 output tubes)
6.3 volts, 3 amp. (6J7 control tube and s.a. tubes) (Kenyon T-214)

YOU BUY RADIO PRODUCTS ON REPUTATION — WHY NOT CHOOSE YOUR JOBBER ON EXACTLY THE SAME BASIS?

Yes sir, when you are looking for amateur radio supplies, an amateur Receiver, X'mtr, Tubes or accessories you first assure yourself of the reliability of the manufacturer. Why not choose your jobber on reputation too? For 15 years Sun Radio has built an enviable reputation for fast, reliable *service . . . the kind of service that is built upon a keen* understanding of your requirements.

THIS MONTH THE SUN SHINES ON:

- The NEW NATIONAL NC80X complete with Tubes, Speaker and Crystal. Net.... **$88**
- HALLICRAFTERS NEW SUPER SKY-RIDER complete with Tubes, Speaker and Crystal..... **$123**

Write for information on our time payment plan.

- **NATIONAL RECEIVERS CARRIED IN STOCK** for immediate delivery. **NC100, NC101, NC80X, HRO, HRO JR., SW3.** Write for Free Catalog and net prices.
- **PREMIER CRYSTAL** complete with sealed Holder. 40, 80, 160 Meter..... **$4.35**
- **STANCOR PLATE TRANSFORMER,** 1000 volts, 300 ma; 500 and 750 volt taps. Net..... **$5.75**
- **JEWEL PORTABLE METER.** 1000 ohms per volt. Ranges 7½–300 and 750 volts. Each..... **$4.25**
- **TAYLOR'S LATEST DEVELOPMENT T-125.. $13.50** All other types in stock.
- **SYLVANIA 211 C.** Brand New and Guaranteed. Will replace 203A–242A–211 and others. Net..... **$6.45** **EIMAC, RAYTHEON, RCA, AMPEREX TRANSMITTING TUBES IN STOCK.**
- We are distributors for Western Electric Amateur Equipment, Tubes, Phones and Mikes in stock.
- **BREAK-IN D.P. DT** 110 Volt AC Relay. Net.... **$2.75**

Fall Bargain Bulletin Now Ready

Contains many "unadvertised specials," items you may need, new developments plus editorial matter by Sam Schwartz, Ed Berliant and Jack Grand. Get copy at once. It's FREE. Simply send Post card to *Dept. Q-12.*

SUN RADIO CO.

227 Fulton Street, New York, N. Y.

Cable Address: SUNRADIO NEW YORK

ranean to boundary between Palestine and Egypt (i.e., a point on the coast about 25 miles east of El Arish), along boundary to Gulf of Akaba—west coast of Red Sea to Cape Gardafui—just north of Sokotra and straight on to 60° East, 18° North—60° E. Equator, 90° E. Equator—South Pole along 90° East.

90° East Equator—Northern point of Sumatra and straight on to mainland—along coast to Singapore—120° East, 20° North—140° East, 20° North—170° East, 30° North.

40° West latitude of Cape Spartel (Africa), approximately 36° North Cape Spartol—along coast of Africa—boundary between Palestine and Egypt.

120° West Equator—100° West on Equator—boundary between North and South America, along this boundary to Caribbean Sea, round coast to Pta Gallinas—Northern point of Curacao—Northern point of Tortuga to Northern point of Tobago—50° West latitude of Northern point of Tobago—40° West, 20° North.

"(f) In order to be eligible for the award, all contacts made by the applicant must be from one station (in terms of license and call letters, but not necessarily of apparatus) operated at one location. The term 'location' shall be construed as representing one metropolitan area, or, alternatively, an area not exceeding 25 miles (approximately 40 km.) in diameter.

"(g) Holders of WAC certificates are entitled to use the letters 'WAC,' signifying that fact, on their station cards and correspondence."

A 10-Watt Speech Amplifier

(Continued from page 17)

r.m.s. value of voltage, provided the output wave-shape is substantially sinusoidal.

Measurements made on the amplifier showed that at the 10-watt output level distortion was negligible. With the gain fully open, the noise level is approximately 43 db below full output (0.5 milliwatts) most of the noise being tube "rush." Power-supply hum is hardly detectable under these conditions, using a loud speaker for monitoring. With full gain, a peak signal of 0.0017 volt at the grid of the 6J7 will develop 10 watts output. Since the average crystal microphone output is several times higher than this, the actual signal-noise ratio is considerably higher than the minimum figure given above. With normal gain-control setting, noise is practically inaudible, and when any hum is present it usually can be traced to external pickup in the microphone circuit rather than to the amplifier itself.

Frequency response with the components and circuit constants shown is adequate for voice reproduction, dropping between 2 and 3 db below the 1000-cycle figure at 100 and 5000 cycles. There are no humps anywhere in the curve. The frequency range could be considerably extended by using suitable transformers (those specified are

Type HFM
Portable Crystal Control
7000—60,000 Kc.
PHONE—CW—MCW

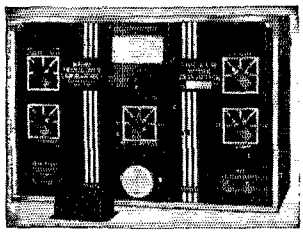

- Single 40 Meter Crystal for All Bands
- A.C. or Battery Operation
- Complete With Coils for 5-10-20 and 40 Meters

H-F-M TRANSMITTER
$57.60

5 METER DUPLEX TRANSMITTER-RECEIVER

- T.R.F. and Super-Regeneration
- 7 Tubes — 5" Dyn. Speaker
- 6E6 Unity Coupled
- 10 watt Carrier
- 100% Modulation
- Duplex Operation — PHONE • MCW

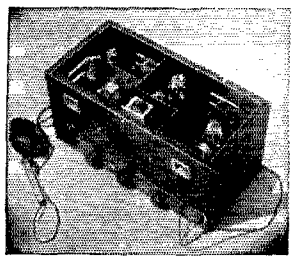

TRANSMITTER — RECEIVER
$47.70

RADIO TRANSCEIVER LABORATORIES
8627 — 115 Street, Richmond Hill, New York

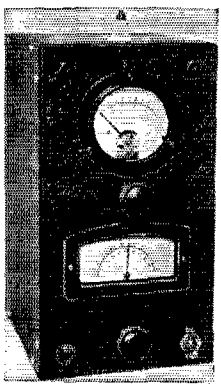

HAYNES RIG CHECKER

Hams all over the world are telling us that these two instruments are the biggest values in radio today. Your station is not complete without one. Circular and instructions for using sent free on request.

BIG RIG CHECKER **$17.90** LITTLE RIG CHECKER **$9.85**

RADIO CONSTRUCTORS LABORATORIES
Dept. Q-1 136 LIBERTY ST., NEW YORK, N. Y.

RADIO

ENGINEERING, broadcasting, aviation and police radio, servicing, marine radio telegraphy and telephony, Morse telegraphy and railway accounting taught thoroughly Engineering course of nine months duration equivalent to three years of college radio work. School established 1874. All expenses low. Catalog free.
DODGE'S INSTITUTE, Day Street, Valparaiso, Indiana

particularly intended for voice work) and by increasing the capacities of the various coupling and bypass condensers in the resistance-coupled stages. The added expense does not seem economically justifiable in view of receiver selectivity, the frequency response characteristics of the microphones used by amateurs, and the requirements for satisfactory transmission of speech. As a matter of fact, even though the response drops rapidly below 100 cycles and fairly rapidly above 5000, in an air test there is little difference between this amplifier and one having a considerably wider response range, using the same good-quality microphone in both cases.

The power-supply unit, incidentally, has ample capacity for running the ordinary amateur superhet. By operating all tubes except the power stage from the regulated part of the supply, a marked increase in stability will be obtained, especially when the operating voltage varies with the signal. This is the case with a.v.c. when the plate current of the controlled tubes varies with the gain, and also happens when Class-AB output stages draw more current with large grid excitation.

How Would You Do It?

(Continued from page 48)

are held together with good glue and long, thin wood screws. The shelves are mounted over ¾" by ¾" cleats with headless finishing nails. The hinges should be strong enough to support the weight without sagging. They are fastened to the box with bolts and nuts.

Door catches and a lock are provided. A pair of handles fitted at the top end makes it easy to carry from place to place. The box may be either mounted permanently on the wall or provided with rubber feet. The cost need not exceed three dollars.

Two or three others submitted kinks which are worth mentioning.

W2KJY uses quart-size mayonnaise jars with screw tops for screws and small parts. The screw tops are fastened on the under side of a shelf or the work bench. The jars are removed by simply unscrewing from the permanently-mounted top.

W1ALJ finds a piece of heavy duck, about two feet square, handy when hunting for some particular screw or other item in a miscellaneous lot. The cloth is simply spread on the bench or floor while the contents of the box are spread over the cloth. When the desired item has been found, the remainder is easily poured back into the box.

W3GGE finds a fisherman's tackle box just the trick for screws and small parts as well as tools.

W3GZW suggest the use of a utility closet, sold in department stores for the storage of linen, brooms, etc. His is 5 feet high, 26 inches wide and 12 inches deep, has five shelves and cost approximately four dollars.

W8OMM obtained sectional cardboard boxes from his grocer for storing tubes. The boxes are

(Continued on page 122)

Applying Inverse Feedback to the Universal Speech Amplifier

Modifications to Improve Frequency Response and Increase Power Output

By George Grammer*

MOST 'phone operators are distinctly "quality-conscious," to judge by the important place the word occupies in most air conversations. Yet few seem to have taken advantage of one of the easiest methods of improving speech-equipment frequency response and reducing distortion, the two most important ingredients of "quality." Although the advantages to be gained by the use of inverse feedback have been dwelt upon several times in *QST*,[1] it may be that any sort of feedback is an anathema to builders of speech equipment and consequently is no dodging the fact that practically every amateur who takes pride in his equipment wants that extra something which makes for good speech quality, even though the additional trouble and expense may not be justified from the purely utilitarian standpoint. Therefore, any reasonably simple and inexpensive means of increasing frequency response should be of interest.

Simply to see what could be done by such methods, we decided to "operate" on the speech amplifier described in October *QST*.[2] As originally built, this unit incorporated components

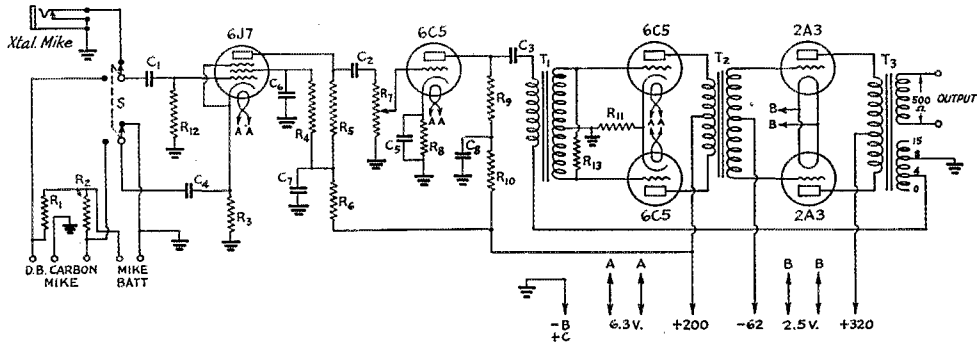

FIG. 1—REVISED CIRCUIT DIAGRAM OF THE UNIVERSAL SPEECH AMPLIFIER, INCLUDING INVERSE FEEDBACK

Constants are the same as given in Fig. 1, page 16, November, 1937, QST, with the following exceptions: C_4, 15-μfd., 25-volt electrolytic; C_6, 4-μfd. electrolytic, 200-volt; R_{13}, 250,000 ohms, ½-watt.

is left severely alone by those who stand to gain a good deal from its use. Actually, it's not such a formidable thing to apply.

It is well known that the transmission of intelligible speech does not impose very rigorous demands on the frequency characteristic of the speech system. For all practical purposes, a frequency characteristic fairly uniform between about 200 and 3000 cycles is adequate for good reproduction of speech; the addition of lower and higher frequencies does not add materially to the intelligibility. For amateur communication, more than good intelligibility is not required, but there and circuit constants designed for speech reproduction, with cut-offs near 100 and 5000 cycles. The transformer-coupled stages were naturally suspected of introducing most of the frequency discrimination at the low and high ends; however, the constants of the first two stages, the 6J7 and 6C5, had been selected for 100-cycle cut-off, so the first step was actually to measure the performance of these two stages from the frequency standpoint. To do this the first transformer, T_1 was disconnected from the 6C5 plate circuit and an oscilloscope connected through C_3. With variable-frequency constant-amplitude input to the 6J7 grid, the output of the two stages was down perceptibly at 100 cycles, although perfectly flat from about 200 cycles up to 15,000, the limit of the audio signal generator range.

* Assistant Technical Editor.

[1] "Some Practical Inverse Feedback Circuits for Audio Power Amplifiers," *QST*, January, 1937; Carter, "Inverse Feedback Applied to the Speech Amplifier of the Amateur 'Phone Transmitter," *QST*, April, 1937; "Note on Reduction of Distortion and Noise with Inverse Feedback," *QST*, July, 1937.

[2] "A 10-Watt Speech Amplifier with Voltage-Regulated Plate Supply," *QST*, November, 1937.

Now it is generally possible to use feedback over two stages without running into oscillation difficulties but somewhat dangerous over three, especially when some of the stages are transformer-coupled, because phase shifts in the transformers can cause oscillation at the high or low ends. Therefore we had decided to confine the

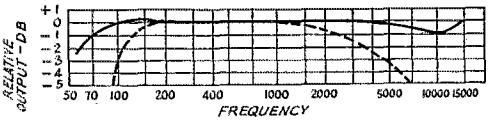

FIG. 2—FREQUENCY RESPONSE CURVES WITH AND WITHOUT INVERSE FEEDBACK

Solid line, with negative feedback applied; dotted line, without feedback. Reference frequency, 400 cycles. Output level approximately 9 watts.

feedback to the last two stages only, thereby including all the transformers. Negative feedback, however, cannot correct for frequency discrimination in stages preceding those treated unless special frequency-correcting measures are taken in the feedback circuit itself. We felt that it would be simpler to straighten out the front end insofar as possible, and thus avoid the special equipment needed for accurate frequency correction in the feedback circuit.

The low end of a resistance-coupled amplifier can be boosted readily by the use of sufficiently large by-pass and coupling condensers. Trial of several condenser values at various points resulted in flattening out these two stages to the extent that the amplification was uniform from 70 cycles up to 15,000, the low-frequency drop becoming perceptible at about 50 cycles. The new condenser values are given in Fig. 1, the resistors remaining unchanged. The changes, in brief, consisted of making C_4 a 15-μfd. instead of 5 (a 10-μfd. electrolytic shunted across the original 5-μfd. unit), and C a 4-μfd. electrolytic instead of the 0.1-μfd. paper originally specified. Increasing other condenser values made no noticeable difference in performance, hence these were left alone. A recheck of the frequency characteristic of the entire amplifier after the changes were made showed no difference in the final output, thus confirming the original suspicion that most of the discrimination was in the last two stages.

ADDING NEGATIVE FEEDBACK

Several methods are available for applying feedback. Many of these use resistance-capacity combinations, which, however, are not always suitable in the case of transformer-coupled amplifiers. In this case we wanted to introduce the feedback in the primary of T_1 and thus compensate for all the transformers in the speech amplifier. Introduction of feedback in the secondary circuit would not correct for frequency discrimination in the primary, and besides would have been difficult to apply to a push-pull transformer without separate secondary windings or without special taps.

The first scheme tried used a resistance-capacity network from the plate of one 2A3 to the primary of T_1, the feedback voltage being developed across a resistor of a few thousand ohms connected between the lower end of the primary and ground. This was fairly satisfactory at the high-frequency end, but did not give any particular improvement at the low, although the values of R and C were varied over quite a wide range. This was probably the result of different orders of phase shifts in the transformer and feedback network. A better arrangement—the one finally adopted—used transformer coupling in the feedback circuit. The means for introducing feedback were right at hand, since the output transformer, T_3, was provided with a speaker voice-coil winding. Taking some of the voltage

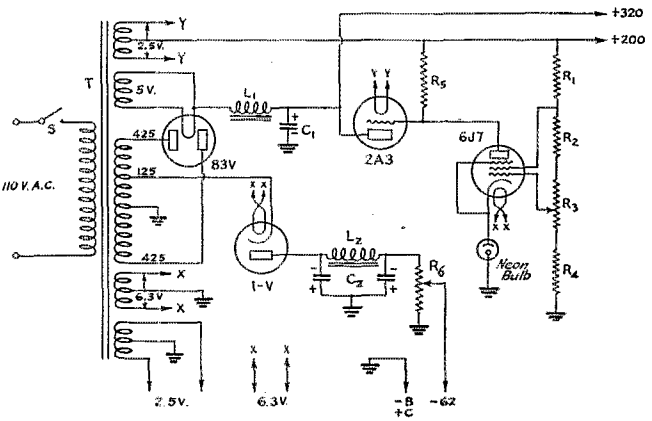

FIG. 3—REVISED POWER SUPPLY DIAGRAM, WITH BIAS SUPPLY INCLUDED

Constants are the same as given in Fig. 2, page 17, November, 1937, QST, with the following exceptions: R_6, 12,000-ohm semi-variable resistor (25-watt slider type); L_2, midget filter choke; C_2, double 8-μfd. 250-volt electrolytic. L_1 and C_1 are the same as L and C in November QST, with the two sections of C_1 in parallel.

developed across this winding and inserting it in series with the primary of T_1 gave much better performance and required not a single extra component. The method of connection is shown in Fig. 1. The voice-coil winding is tapped for 4, 8 and 15 ohms; in our case proper phasing and about the right feedback voltage were secured when the 8-ohm tap was grounded and the 4-ohm tap connected in series with the primary of T_1. Reversing the voice-coil winding connections

(Continued on page 84)

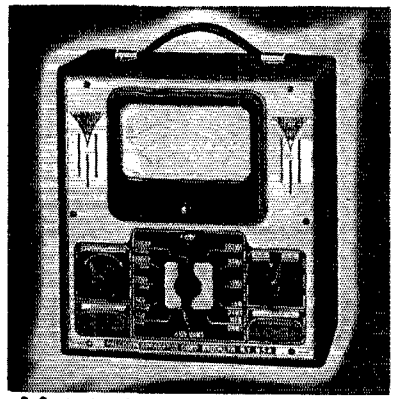

"PRECISION"

SERIES 840L A.C.—D.C.

VOLT-OHM-DECIBEL-MILLIAMMETER

including a

2500 VOLT A.C. and D.C. RANGE and a 1000 M.A. RANGE

SPECIFICATIONS

★ *5 A.C.-D.C. Voltage Ranges* from 0 to 2500 volts at 1000 ohms per volt.

★ *4 D.C. Current Ranges* from 0 to 1 amp.

★ *5 Output Ranges.*

★ *3 Resistance Ranges* from 0 to 10 megs. (provision for self-contained batteries).

★ *5 Decibel Ranges* from —10 to plus 63DB.

Net price to amateurs **$19.95** *Less batteries and test leads*



New "PRECISION" *New*

SERIES 830

D.C. VOLT-OHM-MILLIAMMETER

SPECIFICATIONS

★ *Five D.C. voltage ranges* at 1000 ohms per volt: 0–10; 0–100; 0–250; 0–500; 0–1000 volts.

★ *Two resistance ranges:* Low ohms (shunt method) 0 to 500 ohms. High ohms 0–300,000 ohms.

★ *Four D.C. current ranges;* 0–1; 0–10; 0–100; 0–250 MA.

★ *Ohmmeter ranges are powered by self contained supply.*

Net price to amateurs **$10.95** *Furnished with self contained battery*

Write for our new No. 38 Catalog. See these and other PRECISION instruments at your jobber.

PRECISION APPARATUS CORP.

821 EAST NEW YORK AVENUE

BROOKLYN, NEW YORK

W8LDA	W8LDA	25	25
W2GVZ	W2GVZ	6	24 T
W9VOD	W9VOD	24	24
W1JTD	W1JTD	12	22
W6AAI	W6AAI	20	20
VE3ACB	VE3ACB	20	20
W4APU	W4APU	19	19
W9FWG	W9FWG	7	17
W8CZ	W8CZ	13	13
W9TDR	W9TDR	8	16 RT
W3FSP	W3FSP	12	12
W8KZL	W8KZL	8	12 R
VE3LI	VE3LI	11	11
VE4VJ	VE4VJ	9	9
VE2GZ	VE2GZ	8	8
W1JLG	W1JLG	6	6

FIELD STATIONS

W2DKJ-2	W2DKJ-W2JHV-W2IGK	107	234 RT
W9PWU-9	Central Colorado Radio Association [1]	76	172 RT
W8IFD-8	W8OBP-W8QQE-W8IFD	70	160 RT
W4CDC-4	Chattanooga Amateur Radio Club [2]	62	144 RT
W9FUH-9	W9FUH	74	131 rt
W6KSX-6	W6NSC-W6OKL-W6KSX-Ralph Dow (cook)	53	126 RT
W2KR-2	Northern Nassau Wireless Association [3]	58	116 RT
W4BRB-3	W3DOD-W3GVO-W3GXA-W4BRB.	38	96 RT
W8CFR-8	Amateur Transmitter's Assn. of W. Pa. [4]	36	92 RT
W6KBB-6	W6KBB-W6JRZ	45	90 RT
VE3KM	Hamilton Amateur Radio Club [5]	58	87 R
W9SFZ-9	W9SFZ-W9KXJ-W9FND	43	86 RT
W3BKQ-3	Chester Radio Club [6]	38	76 RT
W8KO-8	W8KO	26	72 RT
W3BGD-3	Beacon Radio Amateurs' Club [7]	33	66 RT
W8JA-3	W8JA	15	50 RT
VE3SY	VE3SY	25	50 RT
W2AHC-8	W2AHC	14	48 RT
W9HHT-9	W9YNR-W9OMG-W9HHT	24	48 RT
VE3BY	VE3AJB-VE3BY	14	48 RT
W7GDB-7	Butte Amateur Radio Club [8]	31	41
W5ABQ-5	W5ABQ	14	28 RT
W9NGG-9	Starved Rock Radio Club [9]	16	27 Rt
W9RSL-9	High Frequency Communications Assn. [10]	11	22 RT
VE4ABM	VE4ABM-VE4AF	10	20 RT
W2HLB-2	W2HLB-W2HYQ	19	19

* An R after the score indicates that receiver was self-powered; T indicates that transmitter was self-powered. No indication means that power was secured from the public mains. Where self-power was used part of the time, this is indicated by an r or t.

Club operators: [1] W9OKH, W9PWL, W9PWU, L. R. Ware (log keeper), Mrs. W9OKH (cook). [2] W4CDC, W4DU8, W4EXK, W4PL. [3] W2AOL, W2AYJ, W2AZS, W2DDU, W2DUA, W2DXO, W2FMC, W2GZS, W2HQJ, W2KR. [4] W8BSO, W8CUG, W8NXD, W8AVY, W8CFR. [5] VE3PO, VE3VZ, VE3GZ, VE3KM, VE3AFA, VE31A. [6] W3DGM, W3ATK, W3CWQ. [7] W3ATR, W3BZC, W3CMW, W3CNP, W3DYL, W3ETA, W3FLY, W3BGD. [8] W7GDB, W7FRS, W7FHF, W7FXF, W7GJC. [9] Operators not listed. [10] W9RSL, W9UXD, W9SRT, W9SNU, W9PZM.

Inverse Feedback to S. A.

(Continued from page 84)

will result in oscillation, so that it is not difficult to get the polarity right.

A new frequency run on the amplifier showed that the response now was within 1 db from about 200 cycles on up to 15,000, using 400 cycles as a reference. At the low end, however, the output showed a rise instead of the previous drop, being up about 5 db at 100 cycles. Check on the oscilloscope showed, as expected, a phase shift at the low end which indicated reduction of feedback or possibly regeneration. The former seems more probable, since there was no tendency toward oscillation, nor did the output rise above the nor-





Wm. (Sailor) Davis, Midland Student now employed by TWA

W4CNB
W9YCT
W9HON
W9DFY
W9IQI
W9OQC
W9PGN
W9ULM
W7DIJ

This is a partial list of call letters of foresighted amateurs who have joined their experience with Midland's specialized Airline Radio Operating Training and whom we have placed with major airlines operating in the United States.

The job of being an Airline Radio Operator is interesting, steady and profitable. Then, too, it opens unlimited future opportunities in engineering, research, dispatching, traffic, and other departments of every well organized airline.

To qualify for such a job, you must hold a second class radio-telegraph license with at least a second class phone endorsement; you must have a complete knowledge of procedure, forms, aids to air navigation, weather, symbols, official ATA code and other pertinent subjects. You must be a high speed, accurate "CW" and phone man, capable of copying both on the "mill." These are some of the requirements . . . MIDLAND TRAINING COVERS EVERY REQUIREMENT THOROUGHLY AND COMPLETELY.

Midland's present employment record closely approaches 100%. Frequently our students have been reserved in advance. All indications point to a substantial continued growth of the airlines and an increased demand for properly qualified radio operators. AND OUR TRAINING STANDARDS WILL BE MAINTAINED AT SUCH A HIGH LEVEL THAT OUR STUDENTS WILL ALWAYS BE IN DEMAND.

If you are between the ages of 18 and 30, have a high school education, are free of uncorrectable physical defects and have a sincere desire to enter the profession of Airline Radio Operating, write or wire for complete information immediately. Address your inquiry to

NORM G. SOUTHER
AVIATION DIVISION
MIDLAND TELEVISION, INC.
Dept. 130-M, Power & Light Bldg., Kansas City, Mo.
Affiliated with
Columbia network basic broadcasting station KMBC

mal value without inverse feedback. In either case the cure would be to load one of the interstage transformers with resistance. The loading resistor is R_{13}, whose value was determined experimentally to make the response at 100 cycles the same as at 400. If a rising characteristic is wanted at the low end, the resistor may be omitted.

When R_{13} was added, the frequency characteristic of the complete amplifier was as shown in Fig 2. From 70 to 15,000 cycles, the output is within 1 db of the 400-cycle reference value; for comparison, the original characteristic without feedback is plotted in dotted lines. The slight dip at about 10,000 cycles is probably a result of phase shift in the transformers in that region; it is accompanied by slight distortion of the waveform which, however, is quite unapparent to the ear because the frequency is so high.

So far as practical operation is concerned, the most marked difference is in improved low-frequency response. Better high-frequency response aids considerably in improving the naturalness of speech, but the benefits are largely lost because receiver selectivity cuts off most of the highs even though they may be present in the transmitted signal. On music, of course, the difference between the two characteristics is a great deal more noticeable, so that the solid characteristic is unquestionably to be preferred. The difference is plain, for instance, when the amplifier is used for phonograph record reproduction.

The penalty for improved frequency response with inverse feedback is reduction in gain. This means that more input voltage must be applied to the 6J7 grid for the same power output from the 2A3's. No accurate figure is available on the gain reduction under the amplifier conditions originally existing, because on completion of the work of installing negative feedback the 2A3's were shifted from self-bias to fixed-bias to increase the power output. With this change, the amplifier gain is down about 8 db at the 10-watt output figure. For 15 watts output (obtainable without distortion with fixed bias) the input voltage required is about three times that originally needed for 10 watts with self-bias. There is still more than enough gain for a crystal microphone, since the original sensitivity was considerably in excess of normal requirements.

GETTING MORE POWER OUTPUT

Although 10 watts from the driver is sufficient to excite a great many Class-B combinations, the additional 5 watts which self-bias operation will give is often desirable, especially when the Class-B tubes' grid requirements are near the 10-watt figure. Excess driver power is helpful in improving grid regulation and thus reducing distortion. In this case a slight rearrangement of the power supply and the addition of an inexpensive rectifier-filter bias-supply system were all that was necessary. The power transformer specified originally is provided with a secondary tap for bias purposes so that no special transformer or circuit is necessary. The revised power-supply diagram is given in Fig. 3. The bias-supply circuit consists of the 1-V rectifier, filter L_2C_2, and volt-

Most Users of the Gross CB-55 Are WAC on 10 or 20

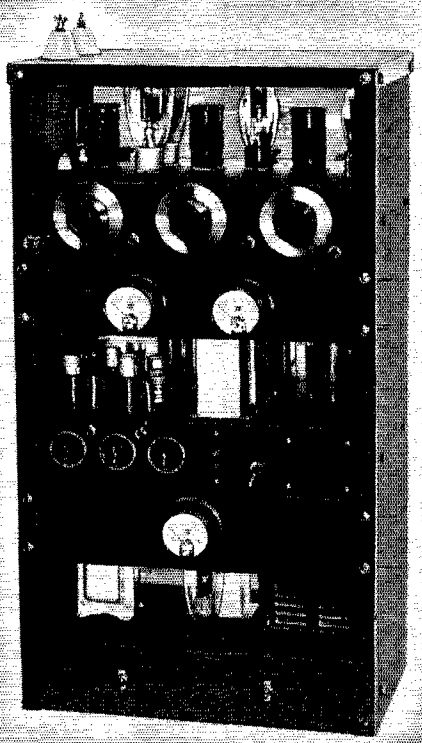

The CB-55 RADIOTELEPHONE and telegraph transmitter offers the user one of the finest units of its kind at an unheard of price, employing the latest circuits and beautiful workmanship. The use of the new T-20's in the output stage assures the user the possession of a commercial looking installation of a real power output and broadcast station quality.

The CB-55 will give fine results on the 1.7 MC, 3.5 MC, 7 MC, 14 MC, and 30 MC bands. Inputs of 95 watts can be used for phone operation. Many amateurs buy the CB-55 particularly for 10 and 20 meter operation.

The CW-55 RF unit, P-55B Power supply, L-40M Modulator unit, FB-55 Rack Frame, 3 high grade surface type milliammeters, meter cords and plugs, power connecting cables and plugs comprise the CB-55 unit.

Size: Overall dimensions, height 32", width 10", length 17".

Write for Bulletin and amazingly low price

GROSS RADIO, INC.

51 Vesey Street, New York

Cable Address: GROSSINC NEWYORK

age-divider R_6. To reduce the plate voltage to the rated figure for the 2A3's (in the self-bias arrangement there was a drop of about 60 volts in the cathode resistor) the plate supply filter is changed from condenser- to choke-input and the transformer secondary taps changed from 360 to 425 volts. Under load conditions, the supply voltage to the 2A3's is 320 volts, allowing for a slight drop in the output transformer windings.

R_6 is a slider-type resistor, the slider being set to give the proper operating grid bias. This may be done with the aid of a high-resistance voltmeter or—and this probably is the preferable method—by adjusting the slider so that the plate current to the 2A3's is 80 milliamperes under no-signal conditions. The positive lead can be temporarily disconnected from the output-transformer primary center-tap and the meter inserted to get the reading.

In connecting the bias-supply filter condenser, make sure that the positive terminals are grounded and the negatives connected to the choke. This is the reverse of the normal procedure, and it may be necessary to make a conscious effort to overcome habit!

The extra bias lead requires the use of an 8-wire cable instead of the original seven, so that it becomes necessary to substitute 8-prong sockets and plugs in place of those originally specified for the supply connections between the two units.

The lower plate voltage under the revised circuit conditions reduces the voltage available to the low-level tubes through the voltage regulator. As indicated on the diagrams, the regulated voltage is approximately 200 volts. This is adequate for all stages, including the push-pull stage driving the 2A3's. The rated 15 watts output can be developed without perceptible waveform distortion.

There is plenty of room in the power-supply chassis for mounting the extra parts. The most convenient arrangement is to mount the 1-V socket on the chassis in the position formerly occupied by the voltage control, R_3, moving the latter to the edge of the chassis where it can be reached without removing the cover. The choke and condenser for the bias-supply filter can be mounted on a convenient inside edge.

Although the conditions existing in the amplifier with feedback do not approach the ideal—for example, with resistance coupling throughout the phase shift could probably be eliminated within the useful audio range—it does seem to us that the improvements resulting from the changes described above indicate that equal benefits could be secured in other types of speech equipment through a few simple modifications. Provided the amplifier reserve gain in the first place is high enough to take care of the reduction brought about by the use of inverse feedback, it should always be possible to improve the frequency characteristic and to reduce distortion. Most of us find such possibilities interesting, and certainly worth a trial when little besides time needs be expended.

Say You Saw It in *QST* — It Identifies You and Helps *QST*

Cathode-Coupled Driver for Class-B Modulators

By R. B. Shimer*

WITH the exception of negative feedback, which has been described in these pages recently, the fundamental design of audio power systems has experienced little improvement beyond the usual absorption of the newer tubes. Of course, new innovations or circuit designs which do not lower cost or materially improve the overall frequency response, while often interesting to the amateur or experimenter, do not find favor and are obviously soon forgotten. However, when a circuit appears which is really an actual improvement over existing designs and which, furthermore, lowers the cost, then it is at least worthy of consideration.

Recently there has come to the audio field a new innovation in the way of drivers. These are called "cathode drivers," since the driver transformer, instead of being in the plate circuit of the driver tube or tubes, is in the cathode circuit. This is a degenerative type of amplifier, and possesses inherently better characteristics than the plate-coupled type for certain applications. In the circuit here discussed, it permits driving a 250-watt audio output stage with only a single receiving-type tube. Moreover, the driver tube operates Class-A, and thus may be fed directly from a comparatively low-level stage.

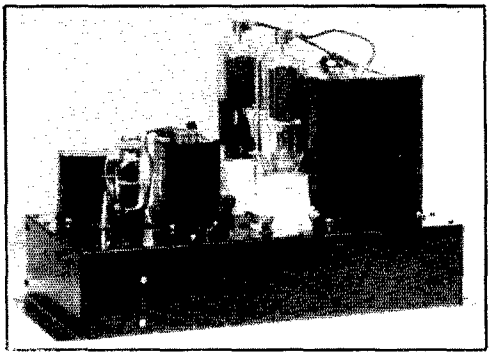

THE CATHODE-DRIVER CLASS-B ASSEMBLY MAKES A COMPACT UNIT

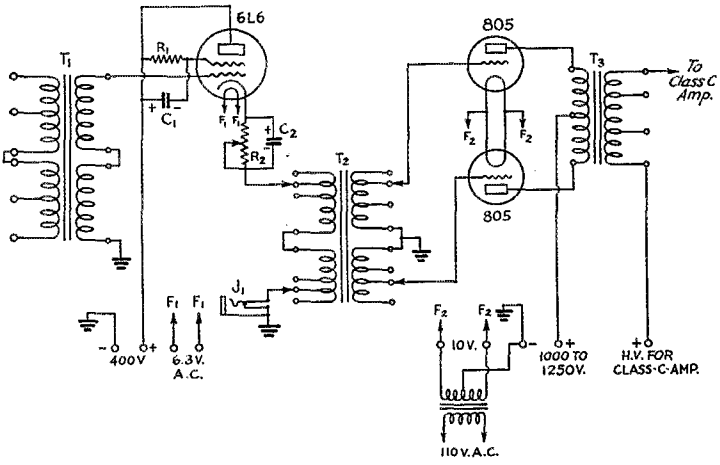

FIG. 1—CIRCUIT OF THE 250-WATT CLASS-B MODULATOR WITH CATHODE DRIVER

*C*1—2-μfd. 450-v. electrolytic.
*C*2—25-μfd. 50-v. electrolytic.
*C*3—4-μfd. 2000-v. paper.
*C*4, *C*5, *C*6—8-μfd. 450-v. paper.
*R*1—50,000-ohm 2-watt.
*R*2—1000-ohm pot., 5-watt (wire wound).
*T*1—Input transformer (Kenyon Type T-2).
*T*2—Driver transformer (Kenyon Type T-264).
*J*1—Single-circuit shorting jack.

This method of driving a Class-B output stage is highly recommended whenever it is necessary to obtain maximum efficiency with lower distortion. One of the inherent faults with existing plate drivers is that often the tube is operated Class-AB or Class-B, which necessitates the use of a driver transformer for the grids of these tubes. Aside from this, tubes that draw considerable grid current usually are characterized by inherent distortion, and when fed into the Class-B final output stage are often responsible for the poor quality so often encountered in inefficiently designed Class-B audio amplifiers or modulators.

While the above advantages of cathode drive are highly desirable, the main advantage is its ease of operation. This particular modulator will deliver full output with an input to the driver tube of only + 14 db—the output of a typical

(Continued on page 100)

*Kenyon Transformer Company, 840 Barry St., New York City.

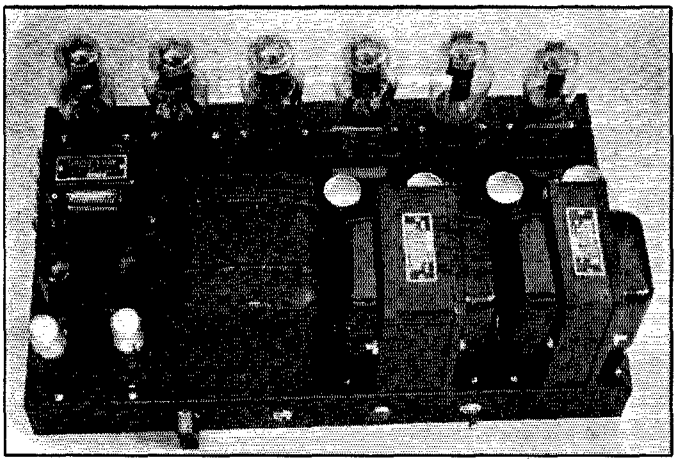

The wide-range 30-watt amplifier complete with power supply. The gain control knob is at the left on the front of the chassis, with microphone jack, pilot light (2.5-volt light in parallel with the 2A3 filaments), and power switch in order toward the right. The two 6J7 tubes are at the left front corner of chassis, with the two 6N7 tubes directly behind. The output transformer is located at the front center of chassis, with power transformer to the right and 250-ma. choke at the right front corner. The four condenser cans are in a row behind the transformers and large choke, and the two small chokes are directly behind the condensers. The input transformer for the 2A3 tubes is directly behind the 6N7 tubes.

A Wide-Range Audio Amplifier

All-Push-Pull Stages Applied to 30-Watt Amplifier-Driver

BY T. M. FERRILL, JR.,* W1LJI

IF ALL of the different phases of interest in amateur radiophone work were averaged, it would probably be found that the first interest of the operators in their equipment is quality and fidelity, with power, flexibility, and general utility following closely in some such order as that given. It should be realized, however, that neither an extremely wide frequency response range nor extremely low percentage distortion is necessary for an amateur 'phone station of excellent voice quality. A frequency range with less than 2 db variation between 100 and 4000 cycles is adequate for this purpose. The usual broadcast program has a range of the order of 100 to 5000 cycles, and experience indicates that a frequency range of 80 to 8000 cycles is adequate to give excellent reproduction of all sounds except certain types of noises.[1] Amplitude distortions of 3 to 5 percent are detectable but are not considered objectionable, while 10-percent distortion is quite noticeable.

What characteristics, then, should a 'phone operator "go after" when building a high-quality transmitter? If any of the audio equipment is to be used for other services, such as public address or theatre amplifier work, it would be desirable to include a range of 60 to 15,000 cycles, making possible substantially perfect reproduction of music as well as speech.[1] In modulation of an amateur 'phone transmitter, however, such a broad range is not only unneeded, but also *very undesirable.* The high-frequency portion of this range would add little to the naturalness of the speech if reproduced in the receiver, and a superheterodyne with sufficient selectivity for satisfactory reception in the crowded 'phone bands loses this high-frequency part of the transmitted speech. Reference to a typical receiver selectivity curve[2] shows that even if the transmitter has absolutely no frequency discrimination in the audible range of frequencies, the audio output of the second detector in the receiver will be approximately 25 db lower at 5000 cycles than at 100 to 500 cycles and approximately 50 db lower at 10,000 cycles, so that there is nothing to be gained by transmitting the audio frequencies above 5000 cycles. More important for amateur communication work is the fact that the *high frequencies not received by the station contacted may interfere with reception of the stations 10 to 15 kilocycles from the frequency of the transmitter.*

The amplifier shown and described here is intended not as a compromise between a narrow-range system and one suited for purposes other than amateur 'phone work, but as an excellent amplifier for any audio-frequency application. As shown in Fig. 2 it is provided with a condenser (C_8) which limits the high-frequency response of the system, with the resulting curve shown in dashed line in Fig. 1. This curve coincides with

* Technical Dept., *QST.*

[1] F. E. Terman, *Fundamentals of Radio*, page 432, McGraw-Hill Book Co., Inc., 1938.

[2] Page 97, *The Radio Amateur's Handbook*, 16th Edition, 1939.

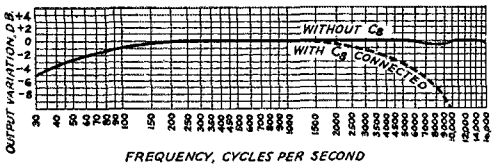

Fig. 1 — Frequency response curves taken with limiting condenser connected for voice transmission and omitted for other uses.

the response curve of the amplifier without condenser up to above 1000 cycles, and then gradually begins falling off, being noticeably low past 5000 cycles. At 10,000 cycles the response has decreased more than 10 db, and this, coupled with the fact that the amount of energy in this frequency region produced by the voice is very small, makes for almost complete elimination of interference from broad side-bands sometimes mistakenly attributed to overmodulation in the case of high-power transmitters.

If operation of the amplifier as a wide-range unit is desired, it is only necessary to disconnect C_8, so that the extremely wide response range shown in solid line in Fig. 1 is the result. Actually, the amplifier is built for this range, and the condenser is an accessory for 'phone operation.

There are several factors which take part in determining the frequency range of an amplifier. If the cathode bias resistor of a single-tube amplifier is by-passed by a too-small capacitance, the low-frequency response of the stage will be impaired, particularly if the cathode resistor is small and the amplification is high. Either a large capacity at this point or a bias cell used in the grid circuit of the stage with the cathode grounded, is a simple remedy at this point. A capacitance of 20 to 50 microfarads is usually sufficient for good low-frequency response if a cathode resistor of 2000 ohms or less is used, and smaller capacities are suitable for larger resistors.

Another factor often found to be the cause of poor low-frequency response is insufficient primary inductance of audio coupling transformers, particularly those used to couple power amplifier stages. Better transformers are at least a partial solution to this difficulty, but sometimes this solution is too expensive to be justified.

Coupling condensers used between voltage amplifier stages must be included in the list of items which might impair the low-frequency response of the amplifier, but tubular paper condensers rated at 600 volts and at 0.01 to 0.1 μfd. are entirely satisfactory.

Causes for loss of high-frequency response in audio amplifiers include decrease of effective plate load impedance of one stage by high effective input capacity of a following stage (most noticeable with high-mu triode types having high plate-to-grid capacity) and decrease of effective plate load impedance of a voltage amplifier stage by high capacity of the plate transformer windings. If the first of these two troubles is experienced, it may be reduced by use of either a lower-mu triode or lower values of plate and grid coupling resistance. If the latter is the offender, a better (and usually more expensive) transformer is the direct solution.

Since it is possible to replace range-limiting condensers with larger capacitances at very little cost relative to the resulting improvement of the frequency range, there is a strong tendency in the design of amplifiers toward use of resistance coupling of voltage amplifier stages in preference to transformer coupling.

A means of improving the frequency range of an amplifier is the introduction of inverse feedback in one stage, or over two or three; this requires provision for more gain than would otherwise be necessary, and requires additional apparatus, although the result usually gives more than justification for the expense and work neces-

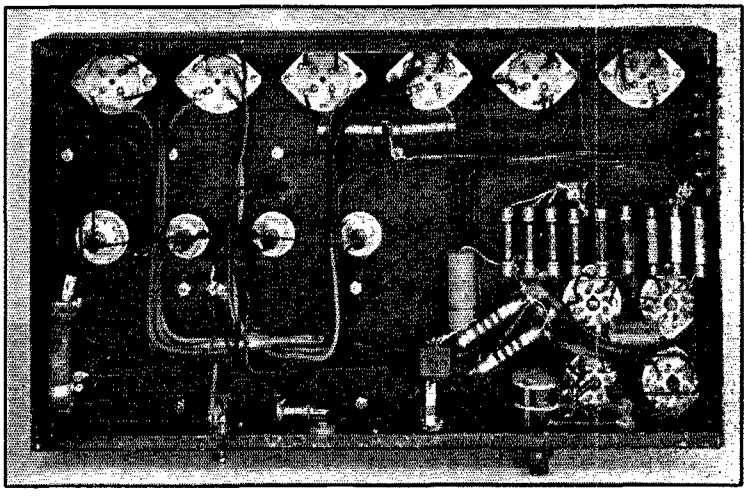

Note that the power supply components and wiring are confined to the half of the chassis at left in this view. The input condensers and chokes are located at the microphone jack, and from the ends of the chokes, shielded wires go through the chassis to the grids of the 6J7 tubes. Plate and grid coupling condensers for the voltage amplifier stages are mounted in a compact group behind the 6N7 tubes. The whole layout is planned for simplicity, with placement of parts for the output of one stage to feed right into the input of the next. In the row of 4-prong tubes, first is the 82, second is the 83, and then four 2A3's.

sary. Inverse feed-back also tends to reduce the hum and the amplitude distortion in the stages over which it operates.

The amplifier described in these pages is entirely orthodox in all features except one — the use of push-pull stages throughout. As will be seen from the solid line of Fig. 1, inverse feed-back is not needed for extension of the range of this amplifier, since the response at the low- and high-frequency ends of the desirable range is quite high.

This excellent frequency characteristic is made possible primarily by use of push-pull stages throughout so that the current through the bias resistors is almost constant over the audio cycle, and thus the use of cathode by-pass condensers which might cause frequency discrimination is made unnecessary. Use of resistance-coupled voltage amplifier stages with sufficient coupling-condenser capacity and with coupling resistors chosen with due regard to the high-mu triodes is a further step toward wide-range response. Since the output stage in an amplifier of this power is almost invariably push-pull, and since a push-pull stage is usually considered a desirable driver for the output amplifier (particularly with such an output stage as four small triodes which are likely to have some grid-current flow on audio peaks), the use of push-pull stages from the input of the amplifier simplifies the problem of driving the output stages without a transformer.

Whereas addition of inverse feed-back to an amplifier makes a marked decrease in hum level, the push-pull stages throughout this amplifier perform this function also,[3] to a very marked ex-

[3] Ferrill, "Refinements in Combination Exciters," *QST* Oct., 1938.

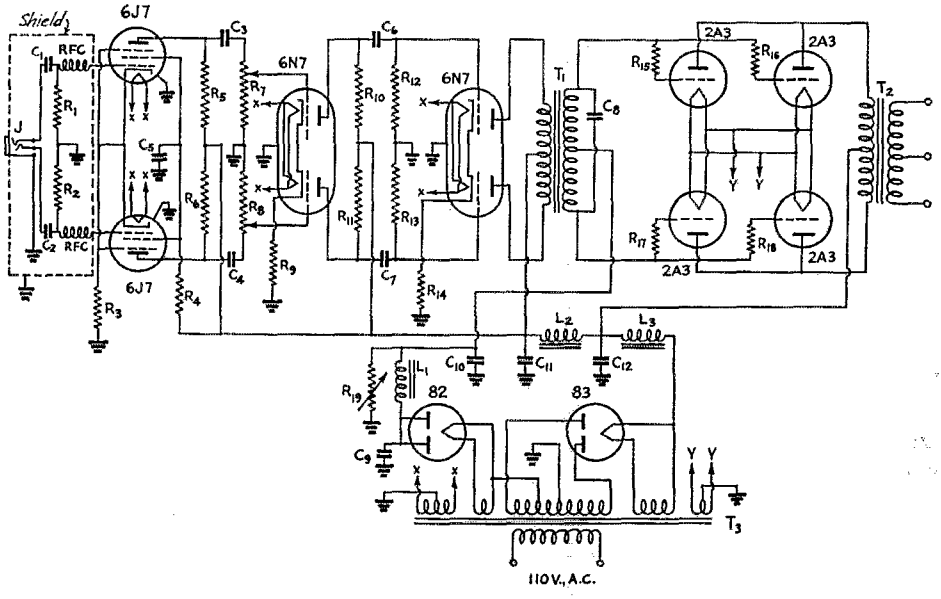

Fig. 2 — Circuit diagram of the amplifier with range limiter

C_1, C_2 — 0.006-μfd. mica, 600-volt.
C_3, C_4, C_6, C_7 — 0.01-μfd. paper tubular, 600-volt.
C_5 — 0.1-μfd. paper tubular, 600-volt.
C_8 — 0.002-μfd. mica, 600-volt.
C_9, C_{10} — 8-μfd. sections of dual electrolytic, 250-volt working (Mallory RM252), positive leads grounded, negative leads connected to ends of L_1.
C_{11} — 16-μfd. electrolytic, 500-volt working (two Mallory HD683 connected in parallel).
C_{12} — 8-μfd. electrolytic, 500-volt working (Mallory HD683).
J — 3-wire jack.
R_1, R_2 — 2-megohm, ½-watt carbon.
R_3 — 600-ohm, ½-watt carbon.
R_4 — 0.6-megohm, 1-watt carbon.
R_5, R_6, R_{10}, R_{11} — 0.25-megohm, 1-watt carbon.
R_7, R_8 — 2-gang, 500,000-ohm potentiometer (Centralab 4-010804).
R_9 — 2000-ohm, 1-watt carbon.
R_{12}, R_{13} — 0.5-megohm, 1-watt carbon.
R_{14} — 700-ohm, 1-watt carbon.
R_{15}, R_{16}, R_{17}, R_{18} — 100-ohm, 1-watt carbon.
R_{19} — 2,500-ohm, 25-watt, semi-variable (see text).
T_1 — Push-pull driver input transformer (Thordarson 74D32).
T_2 — Multi-match driver transformer (Thordarson 15D80).
T_3 — Power transformer to deliver a.c. voltages as follows: 435 volts each side of center-tap at 250-ma. d.c. load; 80 volts (single tap) for bias rectifier; 2.5 volts, center-tapped, at 10 amperes; 2.5 volts at 3 amperes, 5 volts at 3 amperes, 6.3 volts, center-tapped, at 1.5 amperes (Thordarson 75R50).
L_1 — 7.2-henry, 120-ma. choke (Thordarson 75C49).
L_2 — 22-henry, 35-ma. choke (Thordarson 18C92).
L_3 — 13-henry, 250-ma. choke (Thordarson 75C51).
RFC — 2.5-millihenry, 125-ma. r.f. chokes.

tent when hum in the amplifier would arise from a slight a.c. content in the power supply output voltage.

Since the non-uniformity of 2A3 tubes has been the subject of some comment[4] in discussions of push-pull power amplifiers, readers may desire an explanation of the reason for use of these tubes in an amplifier designed for better-than-ordinary performance. To meet this demand, measurements were conducted on a small assortment of 2A3 tubes of different makes and ages. Although much variation was noted in the static plate currents of different tubes at maintained grid and plate voltages throughout the operating range of the tubes, it was found that the *change* in plate current with a definite *change* in grid voltage was quite uniform for the assortment of tubes tested. Since the second-harmonic distortion produced in a push-pull amplifier of transformer output is dependent on the non-uniformity of dynamic characteristics of the tubes rather than on differences of static characteristics, the second-harmonic distortion generated in the output stage as a result of non-uniformity of the tubes will be smaller than the distortion contributed by other causes, and thus may be neglected in the choice of tubes.

Construction

The amplifier is built on a steel chassis measuring 17 by 10 by 2 inches. The arrangement of parts is planned for short, direct wiring, more for convenience than for reasons associated with the operation of the amplifier. The only precautions necessary in the wiring are that the input wiring (from microphone jack to grids of 6J7 tubes) be shielded, and that the a.c. leads be kept away from the circuits of the first two stages.

R.f. chokes are used to isolate the input of the 6J7 stage from radio frequency pickup in the microphone cable, which latter should be of the two-wire shielded type. The shielding braid of the cable and the shell of the microphone are grounded, and the two wire conductors of the cable are connected to the crystal element of the microphone (or to the high-impedance transformer winding in a velocity type). Resistors R_1 and R_2 shown in the circuit diagram of Fig. 2 serve as a voltage divider as well as a d.c. connection between grids and ground, so that only two wires are necessary to connect the output of the microphone to the amplifier input.

The two-section gain control, R_7 and R_8, is provided with two complete separate elements operated by a single shaft, and has three connection lugs on each element. These lugs should be connected as pairs; the pair at the counter-clockwise ends of the resistance strips (viewing the control from the front panel) should be connected to ground, the pair of middle lugs should be connected to the grids of the first 6N7 amplifier, and the pair at the clockwise ends of the strips should be connected to the 6J7 coupling condensers.

The output transformer is provided with taps (only two connections are made to two jacks at bottom of the transformer) connected to jacks on an outside terminal board. Impedances corresponding to turns ratios of 1: 1, 1: 1.25, 1: 1.5., 1: 1.75, and 1: 2 are made readily available for matching almost any desired pair of Class-B modulator grids. By means of a terminal strip at the side of the chassis, two wires may be run directly to the grids of the Class-B amplifier, while a third wire (from terminal connected to the transformer secondary center-tap) may be used for application of fixed bias to the modulator grids, or may be grounded for zero-bias Class-B tubes. The fourth and fifth terminals on the strip are used as 110-volt a.c. terminals, to facilitate use of the amplifier for various purposes and to suit it to connection of power cables in a transmitter installation.

The 2,500-ohm semi-variable resistor provides for adjustment to −62 volts of the bias voltage applied to the 2A3 grids. In the amplifier shown here, this voltage was obtained with the tap on the resistor set for the full 2500 ohms. This would suggest the use of a resistor of 3000 ohms which might well be obtained at the beginning of construction of the amplifier, so that there is no danger of finding the available range of bias voltage too small. If no voltmeter suitable for measuring the bias voltage is available, the slider tap on this resistor should be set for a no-signal plate current of 40 ma. per tube. With the bias resistor setting determined, a plate milliammeter may be inserted in series with each 2A3 plate (the other three plates should be connected directly to the ends of the transformer primary winding during each measurement) and the no-signal plate currents of the four tubes at this bias may be determined. If it is found that one parallel pair of 2A3 tubes is carrying much higher current than the other pair, the tubes may be interchanged until the total currents to the two pairs are approximately equal. This is not a particularly important operation, however, as the previous remarks regarding unbalance of the tubes indicate, and is only suggested as a step to satisfy the most exacting builder.

Strays

W8QBW writes that it has been called to his attention that a flashlight-lamp antenna current indicator (*QST*, October, 1938) may be the cause of a chirpy signal when used in conjunction with a self-excited oscillator feeding the antenna. Comparatively few of these are in use nowadays, but it's a point worth remembering if a bulb should be used with one of them. It's not likely to occur with a crystal oscillator or m.o.p.a.

[4] Brown and Hawkins, "Low Z for Linearity," *QST*, Oct., 1938.

Save Money!



Just compare net costs to you! You can't beat AEROVOX prices.

And remember too the quality. These units stand up.

All due to use of HYVOL —the new super-dielectric oil.

DATA . . .

Latest AEROVOX catalog lists several new transmitting components. Ask your jobber or write us for copy.

600 to 3000 v. D.C. working.

1 to 4 mfd. Capacity.

Welded steel can. H.T. terminals. Leakproof.

AEROVOX CORPORATION
70 Washington St. Brooklyn, N.Y.
IN CANADA: AEROVOX CANADA, Limited Hamilton, Ont.

DO YOU WANT TO LEARN WIRELESS and TELEGRAPHY?



TWO BOOKS EVERY AMATEUR SHOULD HAVE—

Send Now

10¢ Each POSTPAID COIN, OR STAMPS

Hundreds of amateurs have learned from these books, so can you.

These books give you the fundamentals of wireless and telegraphy. They contain the codes and how to learn them. Mail your order now to:

SIGNAL ELECTRIC MFG. CO., Menominee, Michigan

ESTABLISHED 1892

SIGNAL

great difficulty with r.f. pickup coming in from a 1400-foot unshielded cable connecting a field amplifier of — 25 db output to the speech amplifier illustrated. We had expected, too, that this pickup could be eliminated by choice of band-stop or low pass filters inserted in the 500-ohm line. However, even such drastic methods would not stop the r.f. interference. Then the 6J7 pentode was installed in the amplifier and the trouble was cured completely. Furthermore, this almost phenomenal success has been duplicated by us with entirely different setups.

Cathode Coupled Driver for Class-B Modulators

(Continued from page 35)

preamplifier, employing, for instance, push-pull 6C5's, 56's, 76's, or their equivalent, as the final stage.

It is well to admit here and now that the drive delivered by the 6L6 to the 805's in this circuit possesses some harmonic content at high power levels, but this is so small that on voice amplification it is not noticeable to the ear, and shows up but slightly on a 'scope. This should not be misconstrued as a reflection on this economical drive system; many of the conventional plate-coupled drivers produce much more distortion.

The modulator, shown in Fig. 1, is so designed that it will work from any line having a level of + 14 to + 20 db, although it could be coupled directly to a low-level stage by use of an interstage transformer with a 3:1 step-up ratio. As previously mentioned, this type of driver is degenerative, and thus more voltage must appear from the grid of the 6L6 to ground than across the primary of the driver transformer T_2. This means that more voltage is usually needed at the grid of the 6L6 than could be obtained from a low-level stage. The 6L6 is operated with 400 volts on the plate and 300 volts on the screen.

A variable resistor is used in the cathode of the 6L6 tube. This is for adjusting the bias on the 6L6 (— 20 to — 22 volts). A jack for reading the plate current of the 6L6 (50 to 55 ma.) is also included so that the tube may be adjusted for maximum swing without overloading. This condition would be indicated by a shift in the plate current of the 6L6. Furthermore, the driver transformer used is of the variable-ratio type, which allows adjustment for best results and covers a wide range of ratios. Thus the constants of the circuit in which the 6L6 operates may be varied for optimum performance.

The best ratio, as found by the author, was a step-down ratio, primary to ½ secondary, of 1.30 to 1.0; that is, a step-up ratio, primary to total secondary, of 1:1.54—so that an r.m.s. grid voltage of 150 volts grid-to-grid at the 805's necessitates approximately 100 volts on the primary of the driver transformer, and approximately 120 volts to the grid of the 6L6—which boils down to approximately the original + 14 db level input, when transformed from the 500-ohm line.

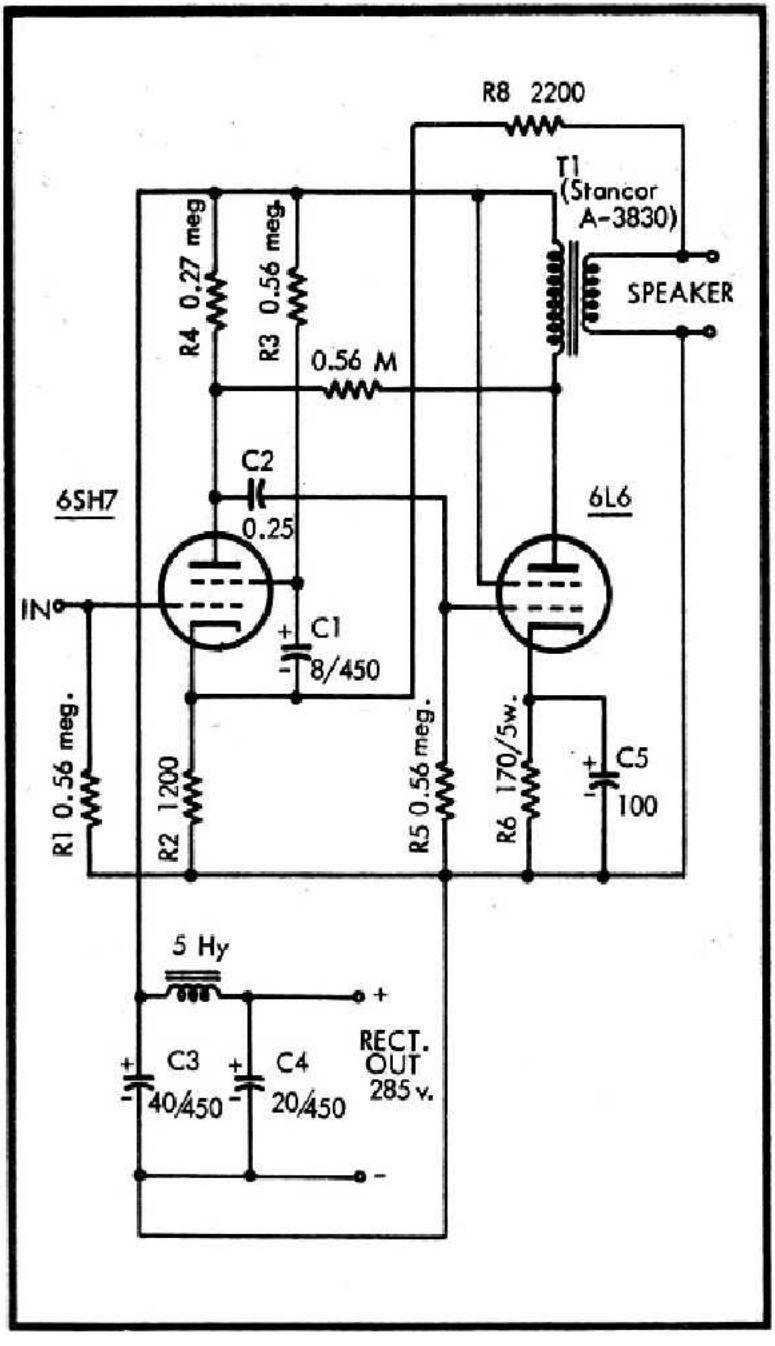
R8 2200
T1
(Stancor
A-3830)
SPEAKER
R4 0.27 meg.
R3 0.56 meg.
0.56 M
C2
0.25
6SH7
6L6
IN
C1
8/450
R1 0.56 meg.
R2 1200
R5 0.56 meg.
R6 170/5w.
C5
100
5 Hy
+
C3
40/450
C4
20/450
RECT.
OUT
285 v.
-

Low Z for Linearity

A 35-Watt Low Distortion Speech Amplifier with Push-Pull-Parallel Triode Output

By M. A. Brown,* W6ABF and J. N. A. Hawkins,** W6AAR

WHILE it has been widely known that good driver regulation is desirable for a low-distortion Class-B modulator, the authors found recently, with the aid of a borrowed RCA distortion-measuring set, that 6L6's with normal amounts of feed-back are far from ideal as Class-B drivers. After spending considerable time and effort in trying to get the bugs out of the 25 db of feed-back which was found to be necessary with 6L6 drivers, it was decided to try out some of the newer low-mu Class-A tubes which have appeared recently. It was felt that a higher net gain with fewer tubes might be realized with the lower mu triodes, since less feed-back is necessary with those tubes.

Low-mu triodes are inherently non-uniform. Past experience with practically all of the older types showed that the RCA 45 and the Western Electric 205D were the only ones available whose characteristics matched closely enough for the theoretical benefits of push-pull operation actually to be obtained in practice. The types WE-300A and the 2A3 were particularly bad offenders, so far as unbalance is concerned. However, tests with many of the newer types of pentodes, tetrodes and triodes, all operated as triodes, showed that the new 6A5G had interesting possibilities. Because of its indirectly heated cathode, trouble from tired and leaning filaments is avoided, and a more rigid element support is used than in most other available tubes.

A haywire breadboard setup showed that the 6A5G was just about what was wanted, so a complete speech channel was built up, ending up in four of them in push-pull parallel. After chasing out the bugs that breed in any new speech channel, the final result represented a marked improvement over the 6L6 channel used previously.

* 328 W. Valley View, Altadena, Calif.
** 2807 8th Ave., Los Angeles, Calif.



THIS COMPACT AMPLIFIER IS CAPABLE OF AN OUTPUT OF 35 WATTS WITH LESS THAN 2% DISTORTION

Well suited for driving a high-power Class-B modulator or for public address work, it utilizes four low plate-resistance triodes in the output stage. Microphone and phonograph inputs are provided. A cover fits over the top to conceal the tubes and other components.

In laying out the voltage amplifier to feed the push-pull-parallel output stage it was decided to provide a high-gain input for low-level high-impedance microphones and a medium-gain high-impedance input for phonograph or telephone lines. Grief with pentode audio amplifiers made the use of triodes desirable, and the phase distortion caused by conventional resistance-coupled phase inverters caused us to go to a transformer-coupled phase inverter.

The circuit was originally laid out with about 6 to 10 db of inverse feed-back in mind but it was decided to do as good a job as possible with the amplifier before the feed-back was applied. It should be pointed out that no amount of feed-back will entirely eliminate distortion and noise—all it can do is reduce it—so obviously the less noise and distortion you start with, the less work the feed-back has to do.

The diagram shows 10 db of feed-back, but the single-pole double-throw switch in the cathode of the 6F6G cuts it out when desired and raises the net gain by the amount of the feed-back, or 10 db. With feed-back the distortion is slightly under 2 per cent at 35 watts output and is under 0.5 per cent at 25 watts output. Without feed-back the distortion at 35 watts output is slightly less than 5 per cent, and is under

1.5 per cent at 25 watts output. It is felt that, in general, the feed-back branch can be left out without any noticeable impairment of speech quality. The frequency response is flat to 2 db from 40 to 8000 cycles without feed-back and there is no need to worry about anything outside of this range with present mikes and speakers. As a matter of fact, it is generally desirable, in a ham rig, to kill most of the highs with the tone control, to avoid adjacent channel QRM.

The authors make out a good case for 6A5G output tubes, and describe a high-gain amplifier with plenty of output for driving a 500-watt Class-B modulator. Good, too, for public-address work.— EDITOR

Without feed-back the plate-to-plate load for maximum undistorted output is 1500 ohms. As a Class-B driver the optimum plate-to-plate load is 2750 ohms. The use of feed-back cuts these loads way down, but extremely low load impedances make the Class-B input transformer design difficult.

For driving zero-bias Class-B modulators about a 1.25 to 1 step-down in the Class-B input transformer is desirable when working from four 6A5G's. For the medium-mu tubes such as 354's, 150T's and 250TL's, etc., about a 1-to-1.25 step-up works out best. Thus the same transformer would work with any tube combination. The output transformer shown, and used at present in the amplifier, is a universal type with both low-impedance and high-impedance taps on it, allowing the amplifier to serve for p.a. use when opportunity affords. However, one big advantage of triode drivers is that they work well with nearly any driver transformer and Class-B tube combination available, with only a slight loss in gain when impedances are not perfectly matched. Thus a cheap Class-B input transformer gives good results with triodes over a wide range in secondary loads while input transformer design is quite critical when using beam tetrodes as drivers.

The 6A5G's have very high transconductance, and the two 100-ohm grid resistors are desirable to prevent oscillation which sometimes occurs with these tubes. They are not always necessary, but they do no harm and they help hold things down.

Bigger blocking and by-pass condensers could have been used to bring up the low-frequency response, but this is generally unnecessary on speech. It was considered desirable to make the

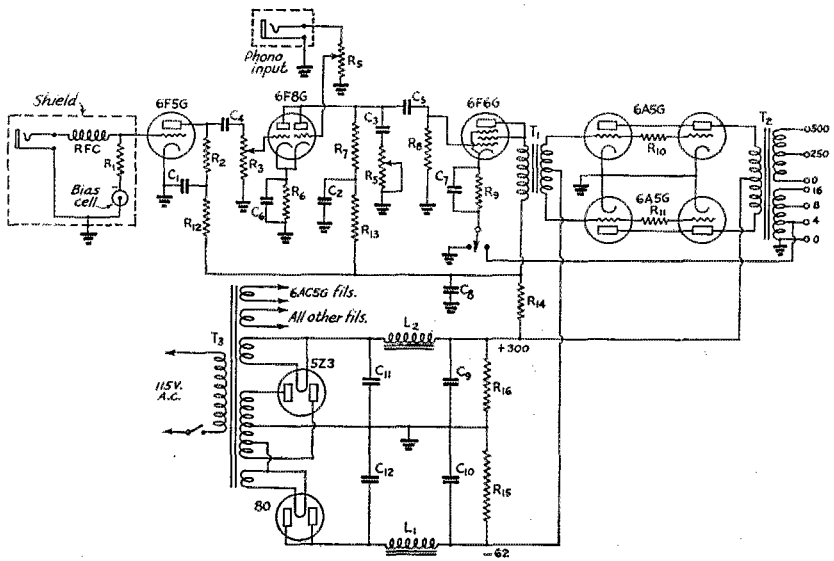

FIG. 1—CIRCUIT DIAGRAM OF THE 35-WATT SPEECH AMPLIFIER

C_1, C_2, C_3—0.1-μfd. paper, 600-volt.
C_4—0.01-μfd. paper, 600-volt.
C_5—0.05-μfd. paper, 600-volt.
C_6, C_7—50-μfd., 50-volt electrolytic.
C_8, C_9, C_{10}—16-μfd., 450-volt electrolytic.
C_{11}—8-μfd., 600-volt.
C_{12}—8-μfd., 450-volt electrolytic.
R_1—5 megohms, 1-watt.
R_2—150,000 ohms, 1-watt.
R_3, R_4, R_5—500,000-ohm volume control.
R_6—3000 ohms, 1-watt.
R_7—100,000 ohms, 1-watt.
R_8—500,000 ohms, 1-watt.
R_9—750 ohms, 10-watt.
R_{10}, R_{11}—100 ohms, ½-watt.
R_{12}, R_{13}—25,000 ohms, 1-watt.
R_{14}, R_{15}—5000 ohms, 10-watt.
R_{16}—50,000 ohms, 25-watt.
RFC—2.5-mh. r.f. choke.
T_1—Audio transformer, single plate to push-pull grids, primary to carry 6F6G plate current (Hadley 3991A).
T_2—Output transformer, 1500 ohms to line or speaker, 50-watt (Hadley 3995A).
T_3—Power transformer, 350 ma. at 300 volts, with bias tap (Hadley 4070A).
L_1—50-ma. filter choke (Hadley 872).
L_2—350-ma. filter choke (Hadley 3772A).

input resistance in the high-gain channel 5 megohms for maximum gain and then hold the boominess down with lower values of blocking and by-pass condensers. The maximum gain is 120 db in the high-gain channel and 80 db in the low-gain channel.

The new 6F8G is ideal for electronic-mixer use because it has high plate resistance, which means that the unused half does not unduly load the side being used. Its high-mu also allows it to contribute considerable gain, which is unusual in an electronic-mixer stage.

A 6J5G could have been used in place of the 6F6G to drive the push-pull-parallel stage, but overload tests showed that the 6J5G stage over loaded first (at about 38 watts) so it was replaced with the triode-operated 6F6G, which costs no more. As long as it doesn't cost anything, it is desirable to have every stage "crack up" at about the same point, which gives most usable *peak* output.

Ordinarily the push-pull-parallel stage draws no grid current, but since the 6F6G can supply some power when and if called on to do so the quality does not suffer materially on speech thereby. It should be noted that while this should be called a 35-watt amplifier for use on music, it will do a fairly good job of lighting up a 75-watt lamp with better than average speech quality. It was used to overmodulate over 150 watts of Class-C r.f. amplifier input with better quality than most push-pull-parallel 6L6 amplifiers.

Normally the output stage operates Class-A and the plate current varies very little so regulation of the plate supply is not a problem. No difficulties have been encountered in building several copies of this amplifier by various local hams so it is believed to be pretty well debugged.

The 5Z3 is working fairly hard but seems to like it so its virtue of cheapness was gladly utilized.

The shielding around the input of the 6F5 and over the whole amplifier is particularly important if the amplifier is to be used around a transmitter. A gain of 120 db is a lot in any league, and is rarer than one might think after reading the catalog!



How Would You Do It?

(*Continued from page 55*)

tubes are those of the Class-B-amplifier or zero-bias type which are almost cut off at zero bias and which yet draw a large plate current when their grids are biased a few volts positive. A Type 19 tube with the elements in parallel is being used here to key a Type 47 since these tubes happened to be on hand. Improved operation would be obtained, no doubt, if more suitable tubes were used. Almost any combination of tubes could be made to work satisfactorily with resistances R_6 to R_8 of suitable values for the tubes used. The values shown are possibly not optimum since only a limited amount of experimenting has been done with this circuit. However, the values do not appear to be very critical. R_5 is, of course, the usual oscillator leak. R_6 is the screen voltage-dropping resistor. In this case, it forms part of a variable potentiometer consisting of R_6 and the keying tube in series. R_8 is used to limit the current drawn by the grid of the keying tube and also to prevent the key from short-circuiting the power supply. Thus the value of resistance may be quite high since its only purpose is to provide a positive voltage to the grids of the keying tube. R_7 is not essential to the operation of the circuit but is used to limit the voltage across the key. A resistance of about one-tenth the value of R_8 will provide sufficient positive bias for operating the keying tube.

"If the oscillator is not loaded or is loaded lightly, it may continue to oscillate weakly when the key is open. However, when the oscillator is fairly well loaded, it will stop oscillating completely because of the additional damping introduced in the circuit. It may be necessary to experiment a little with the values of R_6, R_7 and R_8 and the negative bias on the grids in order to obtain clean keying at high speeds, but no trouble has been experienced at ordinary hand keying speeds."—*W9QOA*.

In the arrangement suggested by G2IS, a double-contact relay was used to shift bias on the grid of the keyer tube from negative to positive. G2IS states that lag introduced by the relay helps to prevent chirps. A Type 45 tube is suggested for

(*Continued on page 62*)

56-Mc. DX Tests

WITH 56-Mc. DX via the F_2 layer a good possibility this winter, test schedules have been proposed by E. H. Conklin, W9FM. He suggests (and has so notified British amateurs) that W stations listen from 10:00 to 10:10 A.M. E.S.T. and for alternate ten minute periods until 11 A.M. each Saturday and Sunday during November. DX Stations should, of course, listen during alternate ten minute periods beginning at 10:10.

Electronic TUBE

HAM NEWS

Copyright 1949, By General Electric Company

SEPTEMBER—OCTOBER, 1949 VOL. 4—NO. 5



RESTRICTED RANGE SPEECH AMPLIFIER

Audio Amplifier Designed Expressly for Speech Work

FEATURES—

- **"Speech" range from 500–2500 cycles**
- **Minimum distortion**
- **Five miniature tubes—one rectifier**
- **Power output of 10 watts**

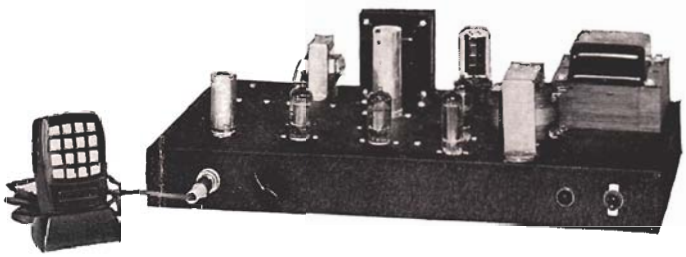

Fig. 1. Front View of the Restricted-range Speech Amplifier

GENERAL CONSIDERATIONS

A speech amplifier for amateur radio service has the job of amplifying the human voice until the complex waveform which forms the human voice has sufficient power to drive the modulator tubes. The amplifier's job, then, is relatively simple. However, the frequency characteristic of the audio amplifier—that is, the amount of amplification which will be obtained at various audio frequencies—determines to a large degree the type of radio-frequency signal which is put on the air.

For example, if you are using a speech amplifier capable of amplifying frequencies beyond ten thousand cycles, and your voice (or extraneous background noise) contains energy at this frequency, then the radio-frequency signal from your transmitter will extend out at least ten thousand cycles—10 kilocycles—on each side of your transmitted radio frequency. Stated another way, your signal has a minimum width of 20 kilocycles. Broad? Quite broad. Even aside from the fact that you have a broad signal, there is little point in transmitting a high fidelity signal. Primarily this is because the average communication receiver does not have an audio system capable of reproducing these high frequencies. In addition, a highly selective receiver will further restrict the audio frequency characteristic.

If you use another amplifier which has practically no gain at 10,000 cycles, but which drops rapidly in gain past 5000 cycles, then this same voice, using this amplifier, will modulate the radio-frequency carrier so that energy exists out 5 kilocycles each side of the center frequency. This gives a signal with a width of 10 kilocycles. By using this second amplifier, have you lost naturalness, does your voice sound exactly the same to the amateur receiving it over the air as it would if he heard you in person? No. Can you be understood? Yes.

How far can this process be carried? How much can we restrict the bandwidth of the speech amplifier, and still have voice modulation which is adequate for communication purposes? While it is impossible to give an answer to this question which will satisfy everyone, most engineers agree that a bandwidth, for understandable speech, of 500 to 2500 cycles is adequate. This is not as narrow a band as might be imagined. For example, the major radio networks send their programs to their member stations on telephone lines. The best of these lines have a cutoff frequency of approximately 5000 cycles. Certainly

CONTENTS

Restricted Range Speech Amplifier ..... pages 1–4
Tricks and Topics (Cleaning Old Sockets; Refinishing Panels; Joint Unsoldering) ..... page 5
Questions and Answers (Suffix "W"; C-R Tube Numbering; Glass Tube Numbers; Battery-Operated Tubes) ..... page 6
Sweeping the Spectrum ..... page 7
Technical Data (12AX7) ..... page 8

ELECTRICAL CIRCUIT

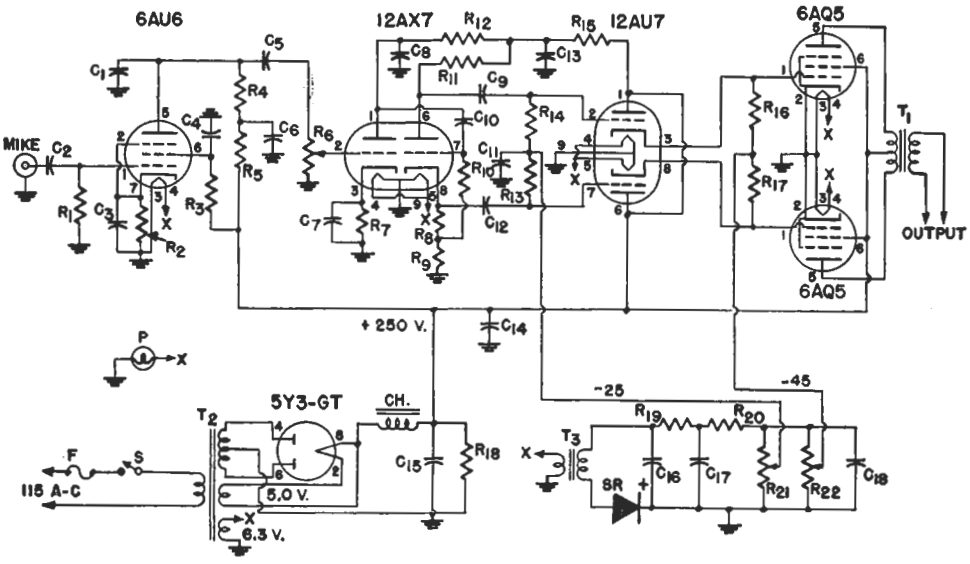

Fig. 2. Circuit Diagram of the Restricted-range Speech Amplifier

CIRCUIT CONSTANTS

C_1 . . . . . 1590 mmf mica (see text)
C_2 . . . . . 0.005 mf 600 volt paper
C_3, C_7 . . . . . 50 mf 50 volt electrolytic
C_4, C_6, C_{13}, C_{14} . . . . . 8 mf 450 volt electrolytic
C_5 . . . . . 1275 mmf mica (see text)
C_8 . . . . . 1380 mmf mica (see text)
C_9, C_{12} . . . . . 0.01 mf 600 volt paper
C_{10} . . . . . 580 mmf mica (see text)
C_{11} . . . . . 0.1 mf 600 volt paper
C_{15} . . . . . 40 mf 450 volt electrolytic
C_{16}, C_{17}, C_{18} . . . . . 40 mf 150 volt electrolytic
CH . . . . . 8 henry smoothing choke, 150 mils
F . . . . . 2 ampere fuse
P . . . . . 6.3 volt pilot light
R_1 . . . . . 1 megohm, ½ watt
R_2 . . . . . 5500 ohm, 1 watt
R_3 . . . . . 0.47 megohm, 1 watt
R_4 . . . . . 47,000 ohm, ½ watt
R_5 . . . . . 10,000 ohm, 1 watt
R_6 . . . . . 0.25 megohm potentiometer
R_7 . . . . . 3500 ohm, 1 watt
R_8 . . . . . 2500 ohm, ½ watt
R_9 . . . . . 17,500 ohm, ½ watt
R_{10} . . . . . 0.1 megohm, 1 watt
R_{11} . . . . . 20,000 ohm, 1 watt
R_{12} . . . . . 0.33 megohm, 1 watt
R_{13}, R_{14} . . . . . 0.5 megohm, ½ watt
R_{15} . . . . 6600 ohm, 6 watt (three 20,000 ohm, 2 watt resistors in parallel)
R_{16}, R_{17} . . . . . 6000 ohm, 1 watt
R_{18} . . . . . 50,000 ohm, 10 watt
R_{19}, R_{20} . . . . . 1000 ohm, 2 watt
R_{21}, R_{22} . . . . . 10,000 ohm, 10 watt semi-adjustable
S . . . . . SPST toggle switch
SR . . . . . Selenium rectifier (G-E 6RS5GH2)
T_1 . . . . . Output transformer (see text)
T_2 . . . . Power transformer, 350–0–350 at 150 mils, 6.3 volts at 4 amperes, 5.0 volts at 3 amperes
T_3 . . . . . Filament transformer, 6.3 volts at 1 ampere

we do not think of network broadcasts as having "poor quality," and yet 5000 cycles (approximately) is the highest audio tone which will be heard when listening to network programs.

The primary advantage in using a speech amplifier which has a restricted high-frequency response is that the radio-frequency signal resulting will occupy less space in the spectrum. Recent FCC amateur proposals which refer to the bandwidth of radio-frequency signals (on which no action has been taken at the time of this writing) can be complied with most easily by sufficient reduction in the response of the speech amplifier at the higher audio frequencies. This is because the radio-frequency bandwidth of a properly operated transmitter is dependent only upon the range of the audio frequencies used to modulate the transmitter. This assumes that the transmitter is free of parasitics, is operating on only one frequency, and the modulation applied is within the modulation capability of the modulated stage, to cite a few of the effects which may give a broad signal, even though the modulating frequencies are within the proper range.

(However, in the case of NBFM, the use of a restricted-range speech amplifier will not assure that the radio-frequency signal does not occupy too much space. If the frequency swing caused by the modulation is excessive then the radio-frequency signal will be unnecessarily broad.)

Thus far we have discussed primarily the higher-frequency audio tones. However, it is also desirable to eliminate, or attenuate, the low frequency audio response of the speech amplifier. Elimination of all response below, say, 500 cycles, would have no effect on the width of our radio-frequency signal, but it would give us the effect of a stronger signal. It is difficult to put an actual number on the gain which could be achieved, but with relatively simple attenua-

tion means used in the speech amplifier a gain of 5 to 6 decibels would be possible. This is the sort of gain which can be expected from a good two-element parasitically excited beam, or by increasing your power by a factor of four.

The energy output of the male voice is concentrated at the lower frequency end of the audio frequency spectrum. Unfortunately these low frequency components of the male voice contribute little to the intelligence in speech. However, being of high amplitude, a great deal of modulator power and modulation capability is required to transmit them. Obviously we can increase the effective transmitted power by reducing the number of low frequency components in the system. Paradoxically a system with restricted high-frequency response, such as discussed previously, sounds more natural if the low frequency components are attenuated in a balanced manner.

There are many ways to accomplish the desired attenuation of the lower and higher frequency portions of the audio-frequency spectrum. All of these methods use an audio network, either simple or complex, which will attenuate certain frequencies either more or less than other frequencies. The amount of attenuation achieved will depend upon the type of network used.

Referring again to the April 27 FCC proposals no statement has been made public, at the time of this writing, as to the amount of attenuation that the FCC feel is adequate. The attenuation achieved in the amplifier about to be described is shown in Fig. 3. This attenuation averages 12 db per octave. Stated another way, the power is down by a factor of sixteen for each octave considered. For example, the power output of the speech amplifier at 10,000 cycles is one-sixteenth of the power output at 5000 cycles.

Referring again to Fig. 3, the calculated operating range of the speech amplifier is from 500 to 2500 cycles. Note that the curve is not flat over this portion, but that the 500 and 2500 cycle points are approximately 6 db down from the midpoint frequency, which is approximately 1000 cycles. For the first octave below 500 cycles and the first octave above 2500 cycles, the attenuation has not yet reached a slope of 12 db per octave. However, for further octave jumps the attentuation will be quite close to 12 db per octave, so that the 125 and 10,000 cycle points will be down by 26 db and the 62 and 20,000 cycle points down by 38 db.

Note this 62 cycle point. The attenuation at this point is theoretically 38 db or, as actually measured in the speech amplifier, 35 db. This means that the power output at 62 cycles will be only one four-thousandth of the power output at 1000 cycles. This means that normal precautions regarding sixty cycle hum need not be taken. As a result, the filament wires in this speech amplifier were neither paired and twisted nor carefully handled. One side of each filament connection was grounded and the other lead run as a single wire. While this may not seem startling, those of you who have had trouble with hum in high-gain amplifiers will appreciate this statement.

The design procedure used in this speech amplifier is identical to that discussed in the "Technical Tidbits" section of the July-August, 1949 G-E Ham News. Readers are referred to this article for the back ground work on the present design. Suffice it to say that C_5 and C_{10} (see Fig. 2) have the job of attenuating the low frequency end of the audio spectrum, and C_1 and C_8 handle the attenuation of the higher audio frequencies. In other words, the entire job is handled by the proper choice of four condensers, two of which would normally be employed in the amplifier even if a restricted bandwidth were not desired.

ELECTRICAL DETAILS

Referring to the circuit diagram, Fig. 2, the tube functions are as follows. The 6AU6 serves as a pentode voltage amplifier, giving a mid-band gain of well over 100. The first section of the high-mu double-triode 12AX7 serves as the second voltage amplifier, and gives a gain of approximately 50. The second section of the same tube acts as a phase inverter. The 12-AU7 tube is a push-pull cathode follower which acts as a low-impedance driving source for the push-pull 6AQ5 output tubes. It is absolutely essential that distortion be held to as low a value as possible if full advantage is made of the restricted bandwidth of this speech amplifier. This is because distortion will cause the radio-frequency signal to become broad, and this is one of the effects that we wished to overcome by restricting the audio bandwidth.

One of the major causes of distortion in the audio systems of amateur transmitters is the use of driver stages with too high an internal impedance to properly drive class AB_1 or Class B stages. Distortion results, in this case, because of poor regulation in the driving voltage when the driver is called upon to supply the grid current drawn during voltage peaks. The 12AU7 cathode follower tube acts as a ***low-impedance*** driver. This permits more power output from the 6AQ5 tubes with less distortion than would be possible if the 6AQ5 tubes were driven directly from the phase inverter.

Essentially the 6AQ5 tubes are operated as class AB_1 amplifiers. Normally this means that no precautions need be taken with the driver stage to ensure minimum distortion provided that the grids are

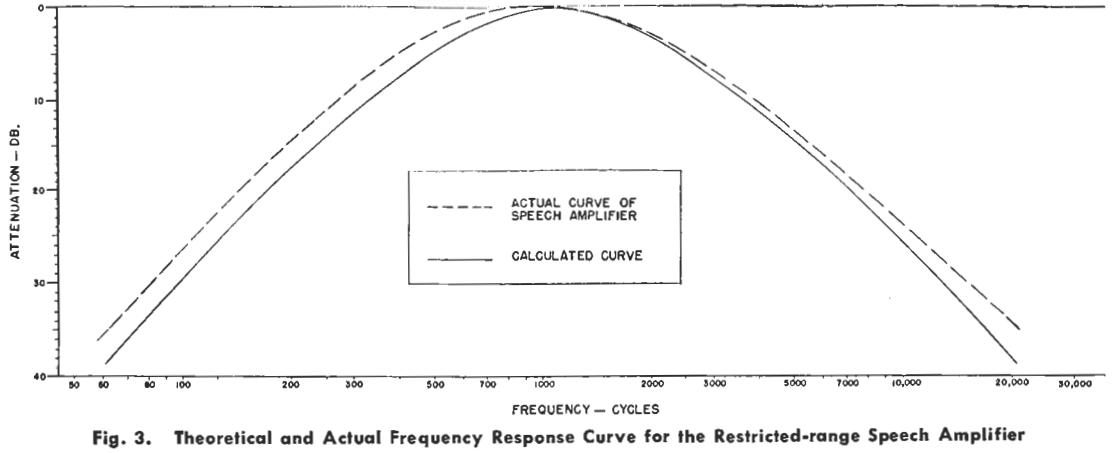

Fig. 3. Theoretical and Actual Frequency Response Curve for the Restricted-range Speech Amplifier

never driven positive. This condition is difficult to achieve unless the average level is kept quite low. By using a driver which presents a low source impedance, which the 12AU7 accomplishes, the average level may be pushed up quite high and the 6AQ5 tubes driven all the way up to the grid bias point. Even if an occasional voice peak causes this voltage point to be exceeded, no distortion will occur due to "folding-up" of the driver stage. The net result is high output, minimum distortion, and a "narrow" radio-frequency signal.

Condensers C_1, C_5, C_8 and C_{10} (the frequency controlling condensers) are listed in "Circuit Constants" with values which are not stock values. The values shown are those which calculation indicate to be correct. Try to obtain condensers moderately close to these values. It is not wise to trust the values marked on condensers, and it is recommended that a capacitance bridge be borrowed to check through your stock of mica condensers. It may be easier to parallel condensers in order to get the proper value. For example, C_1 could easily be made up with a 1000 mmf and a 600 mmf condenser in parallel.

One further point might be made, with reference again to the circuit diagram. Fixed bias is supplied to two stages, the 12AU7 stage and the 6AQ5 stage. The bias supply is unusual in one respect. Cathode current for the 12AU7 stage must flow through R_{22}. The total current for both 12AU7 sections is approximately 10 mils. In other words, this bias supply must be capable of supplying a voltage and a current, instead of just a voltage as in the usual case. If the circuit diagram is followed no difficulty will be encountered. However, if you attempt to use another source of bias, make certain that it can supply the required current.

MECHANICAL DETAILS

The amplifier was constructed on a 17 by 10 by 2 inch chassis. However, inasmuch as practically any layout scheme will work, the prospective builder can use any convenient size chassis and change the layout to suit. The entire speech amplifier and power supply could fit easily in a chassis of half the size of the one just mentioned.

The placement of parts can best be seen in Fig. 1. The tubes are, from left to right, 6AU6, 12AX7, 12AU7, 6AQ5's, and the 5Y3-GT rectifier tube in the rear. Note that the 6AU6 uses a shield. On the rear of the chassis, at the left, is the bias transformer, T_3, with the choke and C_{15} to the right. The power transformer occupies the rear corner and the output transformer is directly ahead of it.

Only two controls are employed—the on-off switch and the gain control. The microphone input jack and the pilot light are mounted on the front of the chassis, and the fuse on the rear of the chassis.

The underchassis view of the amplifier, Fig. 4, indicates the placement of the remainder of the components. No shielded wire was used, mainly because all leads to the first two stages were short. If the layout is altered from that indicated, it might be advisable to shield any long leads in the first two or three stages.

OPERATING ADJUSTMENTS

Once the amplifier has been completed, and it has been established that voltage can be applied without anything smoking, the 12AU7 bias voltage and cathode-return voltage should be adjusted. R_{21} should be adjusted so that the bias, as read from the arm of R_{21} to ground, is 25 volts. Adjust R_{22} until the voltage from the arm of R_{22} to ground is 45 volts. Next check the bias on the 6AQ5 tubes by reading the voltage from pin 1 of either tube to ground. This voltage should be 15 volts. If this is not true, change the tap on R_{21} slightly until the 6AQ5 bias (pin 1 to ground) reads 15 volts. The 45 volt cathode-return voltage should remain unchanged during this adjustment. It will not be necessary to have any input signal to the speech amplifier during the foregoing tests.

The last check to be made, assuming that the am-

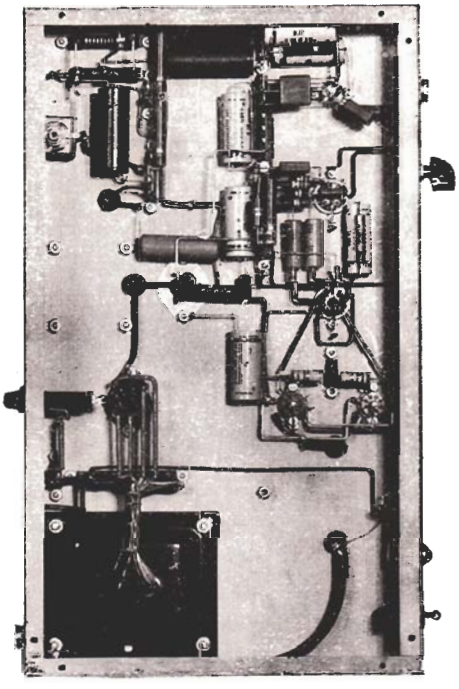

Fig. 4. Under-chassis View of the Restricted-range Speech Amplifier

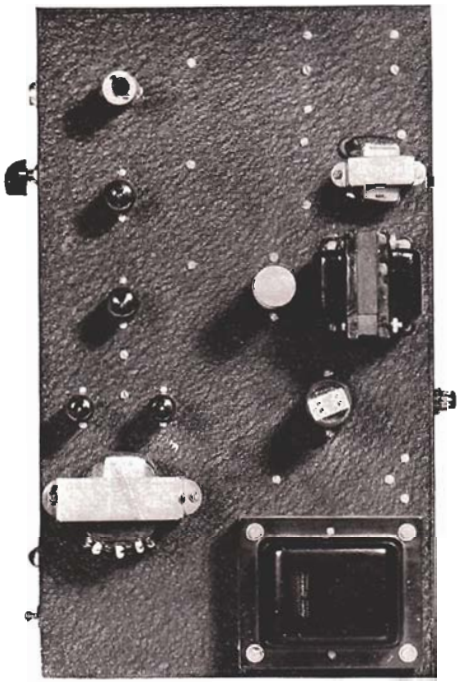

Fig. 5. Top View of the Restricted-range Speech Amplifier

plifier has been correctly wired and is operable, is to match the 6AQ5 tubes to their load. The amount of power that these tubes can deliver will depend to a great degree upon the output transformer. The selection of an output transformer will be governed primarily by the proposed application. It is recommended, however, that a transformer with a number of various impedances be used, so that minor changes in matching may be made.

It is further recommended that a transformer be purchased which has a generous power rating. For example, a 10 watt transformer will serve, but a 20 watt output transformer will permit more output to be achieved without distortion. The amplifier pictured uses a 10 watt output transformer. The highest output power which could be achieved without discernible distortion on an oscilloscope was 7.2 watts (measured output from the transformer). A second amplifier with an 18 watt output transformer permitted an output, under the same conditions, of 11.2 watts. In both cases the transformer was matched to the output load impedance, which took the form of a resistor.

Therefore, procure a transformer which is capable of matching from an approximate impedance of 10,000 ohms (the plate-to-plate effective load resistance of the 6AQ5 tubes) to whatever class B grids you wish to drive. Or, you may wish to match 10,000 ohms to a 500 ohm line. In the latter case another transformer is required to match from the 500 ohm line to the modulator grids. If this system is used, approximately twice as much power is lost between the driver plates and the modulator grids as compared to the case where only one transformer is used. You may expect to get losses up to 3 db in each transformer. Three db is two-to-one in power.

Once the transformer is procured and the amplifier tested while driving the required load, it may be advisable to make small changes in the impedance ratio between driver and modulator to ensure that you have an impedance match which will give maximum power transfer with minimum distortion.

TRICKS AND TOPICS

How did you solve that last problem that almost had you stumped? Be it about tubes, antennas, circuits, etc., Lighthouse Larry would like to tell the rest of the hams about it. Send it in! For each "trick" published you win $10 worth of G-E Electronic Tubes. No entries returned. Mark your letter "Entry for Tricks and Topics" and send to Lighthouse Larry, Tube Division, Bldg. 269, General Electric Company, Schenectady, New York, or in Canada, to Canadian General Electric Company, Ltd., Toronto, Ontario.

CLEANING OLD SOCKETS

The experimenter who is perpetually using the same old ceramic tube sockets over and over again finds that eventually the sockets become dirty with surplus rosin and dirt. These sockets may be cleaned to look like new in the following manner.

Procure a small bottle—a pint jar is about the right size—and fill half of it with sand or fine gravel. Put in the socket and fill the remainder of the jar with paint remover. (Alcohol, turpentine or acetone are equally good—Ed's note.) Shake the jar vigorously for a minute or so. When the socket is removed it will be perfectly clean. Be careful that you do not try to clean sockets that are made of a material which is soluble in the solution you use.—KL7HI.

REFINISHING PANELS

Rack and panel transmitters are good looking when new, but the black or gray crackle finish eventually gets dull and shabby in appearance. It is generally difficult to completely repaint a panel and still maintain the crackle appearance, unless a professional does the job.

However, here is an easy way to repaint panels. The crackle finish will still be present when the job is complete.

First dust the panel thoroughly with a lintless cloth. Next, apply a coat of black (or gray) enamel with a brush. Use good quality enamel. Apply only a thick enough coat to ensure that the panel is covered. Brush off any excess paint.

Let the enamel dry for 10 minutes, then make a wad of cloth and wipe over the panel in long sweeps. Turn the cloth wad to a clean portion before each stroke, so that you continue to remove the enamel. After all excess enamel has been removed, procure a clean cloth and rub the panel in short circular strokes, applying only light pressures. This gives the panel its finish. (A sponge will not work well.) Finally, let the panel dry in a dust-free room.—W1GVY

(Ed's note—This same idea can also be carried out by those with spray guns. Spray the panel with a very thin coat of flat black (or gray) paint and let dry. Do not rub. The result will be a completely refinished crackle panel.)

JOINT UNSOLDERING

Often it is necessary to unsolder a well-made joint and remove parts without damaging them. If the joint has been made using the sound practice of getting a good mechanical connection before applying the solder, the removal of a part is difficult. A good clean job can be made of this removal by using a well-tinned, hot soldering iron which is held on the joint in such a way that the force of gravity will cause the molten solder to run off the joint onto the tinned surface of the iron where it can be wiped off with a rag. In this way, most of the solder can be removed from the joint. It is then possible to grab the end of the wire with long-nose pliers and carefully unwind it from the terminal with an action similar to that used in opening a sardine can. The end is then straightened, and it can be slipped out of the hole in the terminal when heated once more with the iron. In this way, the lead length on the used part is preserved. The terminal is also left clean, ready for the new part, free of the danger of shorts due to surplus solder.—W1RQC

Electronic TUBE

HAM NEWS

MAY—JUNE, 1950

Copyright 1950, by General Electric Company

VOL. 5—NO. 3



LOGARITHMIC COMPRESSOR

Aids in Preventing Overmodulation While Increasing Signal Effectiveness

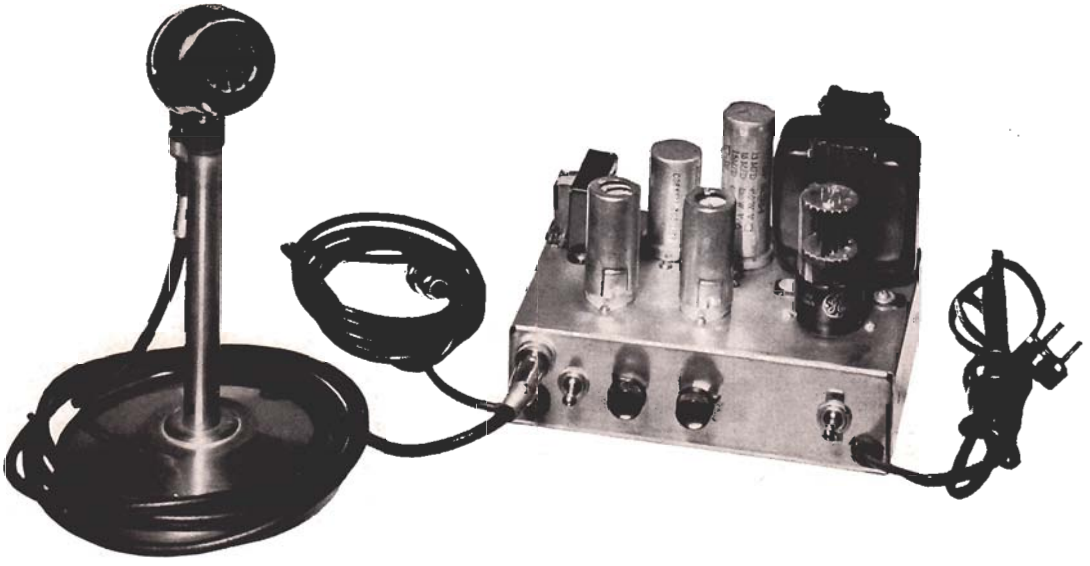

Fig. 1. The Logarithmic Compressor ready to plug into your present microphone jack. Controls are, left to right, in-out switch, compression control, output control and a-c on-off switch.

FEATURES—

- **Provides 10 db increased effectiveness**
- **Uses self-contained speech-range filter**
- **Three tubes, including rectifier**
- **Small size—space saving**

CONTENTS

Logarithmic Compressor ..... pages 1–5
Sweeping the Spectrum ..... page 6
Tricks and Topics (VFO HI-LO Switch; Wire Covering; Proper Care of Crystal Microphones; Microphone Cover) ..... pages 7–8

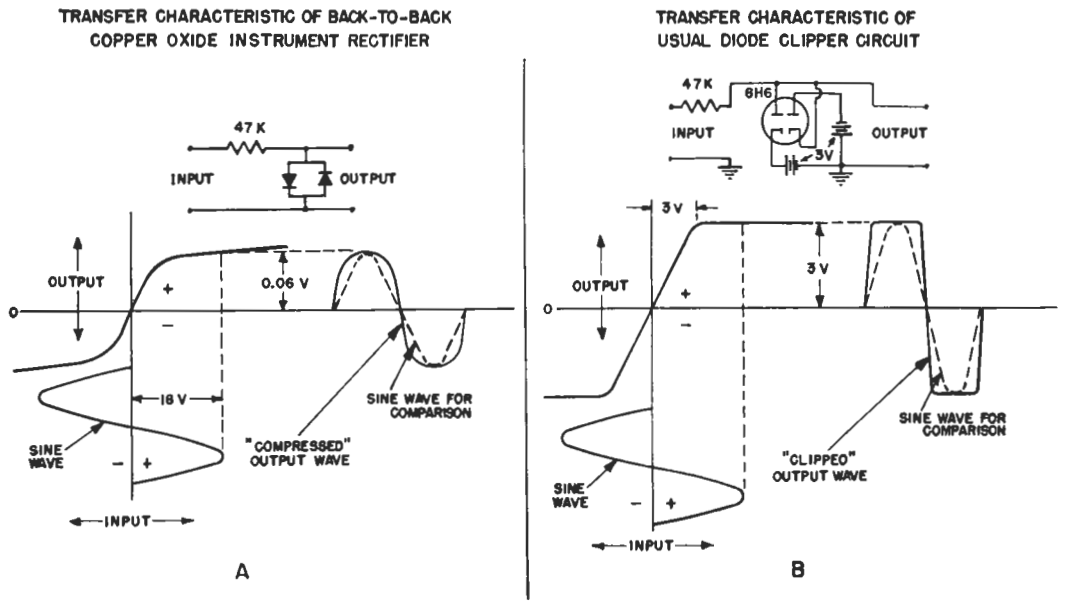

Fig. 2. A comparison between the output waveform of a Logarithmic Compressor and a diode clipper.

Every phone man, at some time in his QRM-ridden life, has wished that he had a small switch available which would permit him magically to increase his power tenfold. This would be Utopia—from one kilowatt to ten kilowatts by pressing a button.

This button is now available, and it is mounted on the front of the Logarithmic Compressor. This unit will give an effective signal gain which is adjustable from a few db up to as much as ten db (ten to one in power).

The Logarithmic Compressor is an audio amplifier device which is inserted between your microphone and your present speech amplifier. Its function is to push up the average modulation level, with the result that high percentage modulation is assured at all times, regardless of the sound level reaching the microphone.

COMPRESSION VS. CLIPPING

Those familiar with clippers or clipping circuits can see that the Logarithmic Compressor is intended to do the same sort of job as a clipper. There is, however, an important difference between logarithmic compression as used in the Logarithmic Compressor and clipping.

Fig. 2 compares the characteristics of the two different systems. In either case the input wave suffers distortion, but the distortion caused by the clipping action of the ordinary diode type clipper (Fig. 2B) is worse for a given amount of signal compression than that caused by the logarithmic compression of a copper-oxide instrument rectifier (Fig. 2A).

Distortion present in either circuit will add "harshness" to speech signals and without further treatment would result in excessively broad signals. Therefore, any distorting type circuit should be followed by a suitable filter to prevent the high frequency products produced by this distortion from reaching the modulated stage. With such a filter much of the "harshness" will still be present but the radio-frequency signal need not be broad. The harshness results from cross modulation (distortion) products that lie within the pass band of the filter.

The advantage of the logarithmic compression system is that the distortion is less severe (for a given amount of compression) than the clipper type, and this makes possible the use of a vastly simpler filter arrangement. Three "stages" of R-C type filtering used in the Logarithmic Compressor are as effective as more elaborate sharp-cutoff types of L-C filter virtually necessary with the clipper type of circuit.

Further, the transient response of the R-C type filter is such that no overshoot of signal peaks can occur. This is not the case with sharp-cutoff L-C filters. This means that the logarithmic compressor circuit with a properly designed R-C filter is superior to the ordinary clipper circuit followed by a sharp L-C filter. Repeated tests confirm this statement.

CIRCUIT DETAILS

With reference to Fig. 3 it will be seen that the first 12AT7 acts as a two stage audio amplifier to bring the signal from the microphone to a sufficient level so that the compression circuit itself operates at the proper level. Resistor R_1 in the first stage has been added as a precaution against radio-frequency feedback.

Special care has been taken to attenuate low audio frequencies prior to compression. Doing this gives a well balanced speech response as well as minimizing much of the distortion caused by cross-modulation between the low speech frequencies and the *intelligence-bearing* high speech frequencies. The values of condensers C_2, C_3 and C_4 are chosen to attenuate the low frequencies adequately before speech compression. Condensers C_7 and C_9 serve the same purpose after compression has taken place.

Resistor R_4, by varying the signal input to the second section of the first 12AT7, enables control of the amount of compression.

The audio transformer, T_1, is necessary because the limiting circuit must be fed by a low-impedance, low-resistance source. Using the center-tap on this transformer accomplishes this function.

The actual limiting or compression circuit consists

ELECTRICAL CIRCUIT

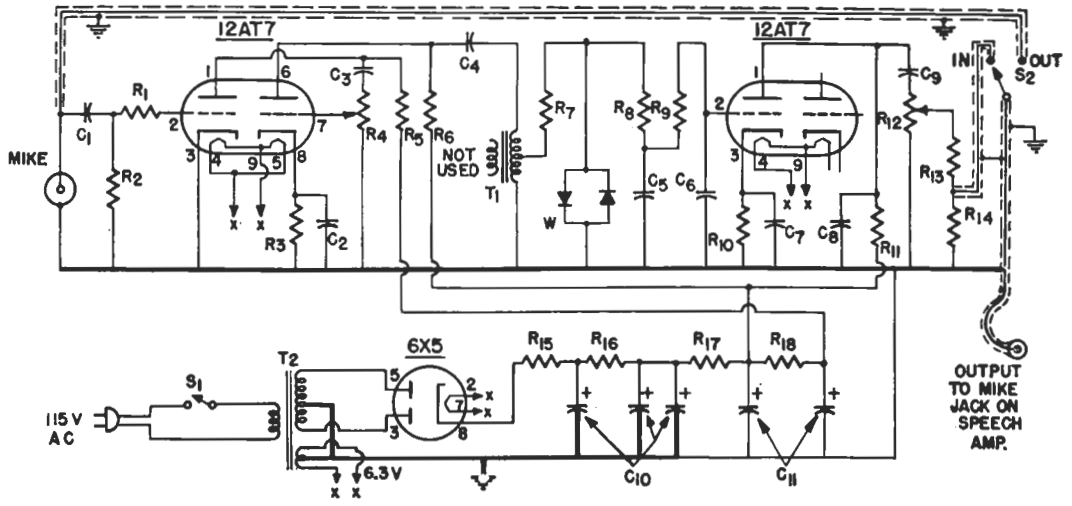

Fig. 3. Circuit diagram of the Logarithmic Compressor.

CIRCUIT CONSTANTS

(All resistors and capacitors ±20% tolerance unless specified otherwise)

C_1, C_9 ..... 0.01 mf 400 volt paper or mica
C_2, C_7 ..... 1.0 mf paper (see text)
C_3 ..... 1000 mmf mica
C_4 ..... 0.05 mf 400 volt paper
C_5 ..... *1000 mmf ±10% mica*
C_6 ..... *100 mmf ±10% mica*
C_8 ..... *0.005 mf ±10% mica*
C_{10} ..... 15-15-15 mf 450 volt electrolytic (see text)
C_{11} ..... 10-10 mf 450 volt electrolytic
R_1, R_{14} ..... 10,000 ohm, ½ watt
R_2 ..... 10 megohm, ½ watt
R_3, R_{10} ..... 470 ohm, ½ watt
R_4 ..... 0.5 megohm potentiometer
R_5 ..... 0.1 megohm, 1 watt
R_6, R_{11} ..... 47,000 ohm, 1 watt
R_7 ..... 47,000 ohm, ½ watt
R_8 ..... *56,000 ohm, ±10%, ½ watt*
R_9 ..... *0.56 megohm, ±10%, ½ watt*
R_{12} ..... 0.1 megohm potentiometer
R_{13} ..... 0.47 megohm, ½ watt
R_{15} ..... 470 ohm, 2 watt
R_{16} ..... 2200 ohm, 2 watt
R_{17} ..... 1000 ohm, 1 watt
R_{18} ..... 4700 ohm, 1 watt
S_1 ..... SPST toggle switch
S_2 ..... SPDT toggle switch
T_1 ..... Push-pull plates to voice coil audio transformer, UTC R-38A (see text)
T_2 ..... Power transformer, 300-0-300 volts at 50 mils, 6.3 volts at 2 amperes UTC R-54
W ..... Copper-oxide instrument rectifier (see text)

only of R_7 and W, the latter being two sections of a copper-oxide instrument rectifier. Resistors R_8 and R_9, together with condensers C_5 and C_6 act as a two-section R-C filter. The output of this filter feeds the second 12AT7 directly. Resistor R_{12} acts as an output control so that the output level from the speech compressor may be made to match the output level of the microphone. Thus when the speech compressor is switched out of the circuit no other adjustment need be made.

The output tube is required for two reasons. It is necessary to present the proper load to the two R-C filters and, secondly, to permit a third R-C stage to be utilized. Inasmuch as the second section of the 12AT7 tube is not used this may seem like wasting part of the tube, but the use of a high-mu triode was dictated and the 12AT7 fills this requirement nicely. Note that the heater of the unused section need not be energized. Many uses for this extra tube section will undoubtedly suggest themselves.

The in-out switch, S_2, allows the unit to be switched in and out of the circuit easily. Note that shielded wire is specified for the connections to this switch. The output itself is carried by a shielded lead which plugs into the mike jack of any speech amplifier designed to handle a high impedance dynamic or crystal microphone.

The power supply is conventional in all respects. Because of the low current drain on the power supply a resistor-capacitor filter is employed. Resistor R_{18} and condenser C_{11} provide decoupling and additional filtering for the first 12AT7 section plate voltage.

The connections indicated by the heavy black lines in the power supply section should all be made to one ground point. This will prevent the chassis from carrying the circulating capacitor current and help to keep the unit hum-free.

CONSTRUCTIONAL DETAILS

As may be seen from the photographs, the entire unit, including power supply, is mounted on a 5 by 7 by 2 inch chassis. While the layout is not critical, it is advisable to keep the power supply portion of the circuit as far away from the rest of the circuit as possible. The layout shown is quite satisfactory.

With reference to Fig. 1, the front panel layout, from left to right, is: mike jack, output lead, in-out

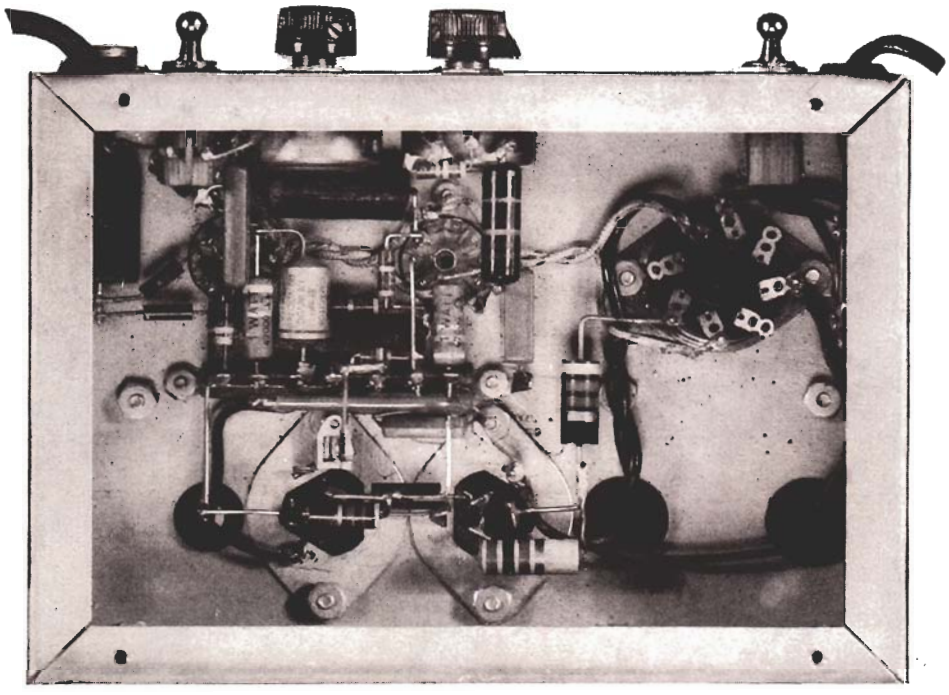

Fig. 4. Under-chassis view of the Logarithmic Compressor. There is ample room for all component parts.

switch, compression control, output level control, a-c on-off switch and a-c cord. The tubes are, left to right, input 12AT7, output 12AT7 and 6X5 rectifier. Note that the two 12AT7 tubes are shielded.

Fig. 4 gives the details of the wiring. Nothing here is critical if normal wiring procedure is followed. Note that R_1 is placed as close to the grid pin as possible.

The wiring can be made simpler if the unused leads from the power transformer are pulled inside the transformer case and securely taped to avoid shorts. This was done with the 2.5 volt and the 5.0 volt windings.

The unit pictured uses a bottom cover plate for the chassis. This is recommended to avoid r-f feedback. Any sort of thin metal will serve for this purpose, if your chassis comes without a bottom plate.

COMPONENT PARTS

While no extremely critical values are required, it is recommended that the specified values be used in all cases. For example, C_2 and C_7 are specified as 1.0 mf condensers. If lower values were to be used, the frequency response would suffer, and if higher values were used, the result would be insufficient low-frequency attenuation.

Condenser C_{10} is about the only component which could be changed. Here a 20-20 mf condenser could be used, with one of the 20 mf section on either side of R_{16}.

Almost any sort of push-pull plates to voice coil transformer will serve as T_1. Wattage rating of this transformer is not important.

If possible, linear taper potentiometers should be used at R_4 and R_{12}. This sort of taper will give a smoother action than other types of taper.

Care must be taken in purchasing the limiter rectifier, W, because instrument rectifiers come in several different styles. Basically, of course, they are used to make a-c meters out of d-c meters. However, they can be purchased as half-wave units, doubler units, full-wave units and bridge units.

Two separate half-wave units, connected as shown, will work, and the bridge-rectifier style will work if the proper leads are used. The "full-wave" unit will not serve because the two diode sections are connected improperly. In the doubler type rectifier the two diode units are connected as shown in Figs. 2 and 3 and therefore this type of instrument rectifier would be the best to use.

COMPRESSION ADJUSTMENT

The adjustment of the Logarithmic Compressor is done very easily. Plug in a mike and place the in-out switch, S_2, in the "out" position so that the microphone is connected directly to your speech amplifier, then follow these three steps:

1. Adjust the audio gain control on the transmitter for normal modulation as seen on an oscilloscope (the best method) or some other instrument worthy of trust.

2. Put the output control on the unit to zero and set the compression control so that it is about half open. Switch the compressor to "in" and advance the output control while speaking into the microphone until the ***peak*** modulation is the same as in step 1. While an oscilloscope is not absolutely necessary in order to make this adjustment, it is strongly recommended.

3. Adjust the compression control so that the average plate current in the modulator stage on a sustained "00000——0" is, say, not over twice that obtained with the compressor out. Then try compressor "in" and "out" on a few QSO's to find the best operating point of the compression control for the microphone you are using and the receiving conditions prevalent at the other fellow's QTH.

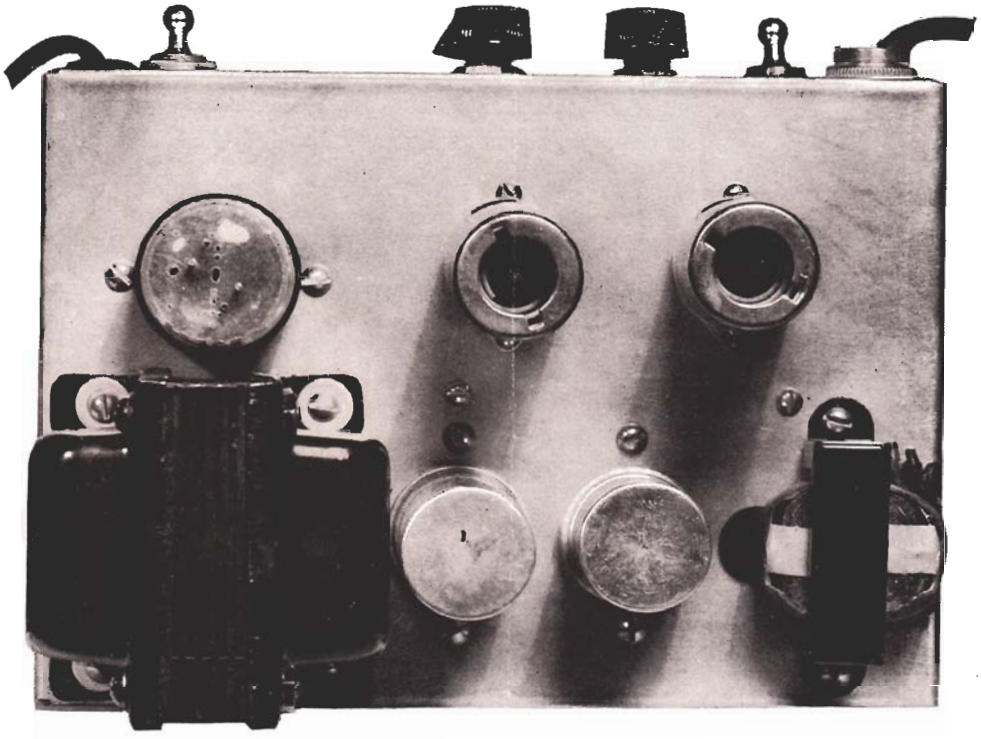

Fig. 5. Top view of the Logarithmic Compressor. The audio section is on the right and the power supply section is on the left.

USE OF THE COMPRESSOR

With the Logarithmic Compressor in use the modulator tubes are required to handle much more average power than usual. In fact, it is possible that your modulator stage will not be capable of handling the extra average power required. Careful checking with an oscilloscope will determine if this is the case.

As a general rule, if your modulator can handle a sine wave signal at 100% modulation, then the average power capability of your modulator is adequate for use with the Logarithmic Compressor. (After all, this ten db gain has to come from some place!) This means that, for a kilowatt rig, your modulator should be capable of continuous operation at 500 watts output at 1000 cycles. For lower powers the same ratio holds.

In operation the compressor must be used with judgment—good judgment that is. Too much compression may make an otherwise acceptable signal almost intolerable. With a judicious amount of compression one can expect to add from 6 db (4 to 1 in power) to 10 db (10 to 1 in power) in the effectiveness of his signal *provided* conditions at the receiving point are such that understandability without the compressor is impaired by QRM or high background noise.

RESULTS WITH THE COMPRESSOR

In many months of test at W2KUJ the following information has been obtained. Nearby stations, or stations not experiencing QRM, prefer that the compressor *not be* used. Stations receiving a weak signal or listening through severe QRM prefer that the compressor *be* used.

Reports from the latter stations range from eight to ten db jump in effective signal strength when the compressor is switched in. Reports from nearby stations are that the signal is *louder*, but somewhat less readable with the compressor in use than without it.

In no case has a report been given that the signal was broader when the compressor was used, even when this question was asked of nearby stations.

Tests made at W2RYT's shack indicate that different microphones give somewhat different results when used with the compressor. For example, an Electro-Voice Model 605 dynamic mike (pictured in Fig. 1) and an Electro-Voice Model 915 crystal mike seemed to have identical speech characteristics (although the dynamic mike had less output) when used without the compressor.

When used with the compressor, the dynamic mike was found to have a speech quality which was less harsh than that of the crystal mike. Further, it was found advisable to advance the compression control with the dynamic mike.

The foregoing is not intended as a recommendation for dynamic mikes, nor is it intended as an authoritative comparison between two Electro-Voice microphones. The comparison has been made to emphasize the importance of testing your compressor carefully with each microphone you may use with it.

In summary, one can expect to boost the effectiveness of his signal when it is needed most by use of the compressor (it frequently means the difference between making a contact or not) with some decrease in ease of reading the signal where the compressor is not needed.

Bear in mind that the compressor *can be* misused (to your disadvantage). Seek honestly to find the operating points which best exploit its use. In many cases it is best to *not* use the compressor. But in those cases where it is needed, the Logarithmic Compressor can really do a job for you.

Improving the

Class B Driver

John W. Campbell, Jr., W2ZGU

Chain reactions causing trouble are not confined solely to atomic bombs. It can happen in the ham-shack, too, without being half so spectacular, or even destructive. It happened this way:—

It says right here in the books that a modulator for plate modulating an r-f load should have 50% of the power capability of the r-f stage, but that since the human voice doesn't make with the sine waves, a modulator having 25% of the r-f power stage capability can handle the job.

It can, too . . . provided you stick to the rather "thin" characteristics of a normal human voice. But that means you're not getting all the signal that you're entitled to; your modulation is 100% so far as peaks go, but it isn't a "full" modulation envelope.

So, having set up a pair of 813's, modulated by a pair of 811's, I wanted to see if a full modulation envelope made a real difference.

It did. By building a speech compressor-limiter, I cut down the sharp peaks of the voice signal, produced a slight alteration in voice quality—and almost doubled the average energy content! Yoicks! I could, with 500 watts to the 813's, lay in a more readable signal than some of the full-gallon stations that were not using compression.

But . . . the 811's were getting very red in the face doing it. The plate current to the modulators was running nice and steady, with that compressor in action—steadily more than the 811's could handle, too.

The answer to that was easy, though. A pair of those 810's I brought back in the dear old surplus days at $2 a copy would come in handy. Same power supply, and they'd yield all the audio I wanted! Fifty percent of r-f—stage power? Heck—they could give about 70% of the r-f power stage output!

So they were installed in place of the 811's, fired up, and put on the air.

The reports weren't so hot, though. The modulation was full, all right, but checking at the other end myself indicated that the XYL seemed to have turned the mike over to Gravel Gertie.

A slight investigation showed why. The 810 is a very nice triode; with —35 volts on the grid, it makes a very nice Class-B modulator. Only it calls for a peak grid-swing of 175 volts positive, and at that point the dear old grid is drawing *one quarter of an ampere,* solid. I had a pair of 807's in AB_1 driving the 810's, but they didn't have a chance with that load. Also, the driver transformer was incapable of pushing anything that stubborn around, even when the primary was excited by a really low-impedance source like a 60-cycle power line.

Now let's see . . . ¼ amp at 175 volts means a peak power demand of . . . call it 45 watts. To handle a Class-B grid-type load, we should have some swamping load on it, and negative feedback, so that means . . . hmmmm. Now look; let's not be silly! A hundred-watt transformer is a modulator transformer itself, not a *driver* transformer! No wonder we had Gravel Gertie at the mike!

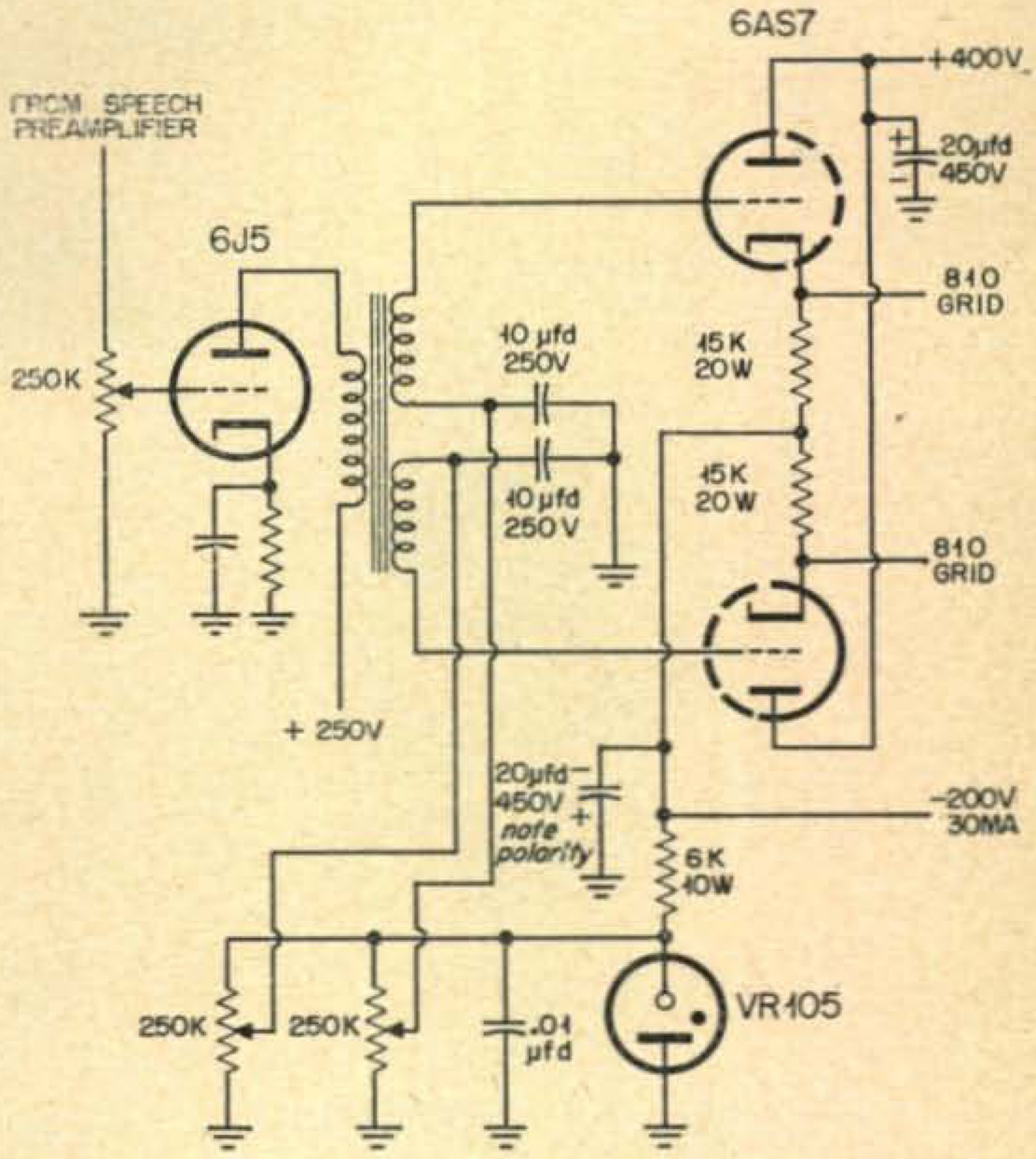

But how in blazes do you get 175-volt grid drive that can take a 250-mil grid current without minding it? We're not trying for a hi-fidelity prize, and won't insist on less-than-½% distortion, but the neatly clipped wave-crests we've been getting won't do.

Investigation showed no satisfactory driver-transformer of the required characteristics anyway. But this chain-reaction had gone too darned far now to back all the way down to the 811's again.

Regulation was the problem—getting the 175 volts was easy. Regulation . . . hmmm. The current involved . . . and the voltage . . . yup! A voltage regulation circuit it shall be! With a 6AS7 voltage regulator!

The circuit that evolved is shown.

The two halves of the 6AS7 are acting purely as cathode followers; their input impedance is, in consequence, extremely high—and, I hasten to add thankfully, *stays* high throughout the audio cycle. The 810 grids are directly connected to the 6AS7 cathodes; the massive 810 grid current now appears as cathode current in the 6AS7, and the 6AS7 is completely competent to handle that slug

[Continued on page 56]

SAVE HOURS OF WORK

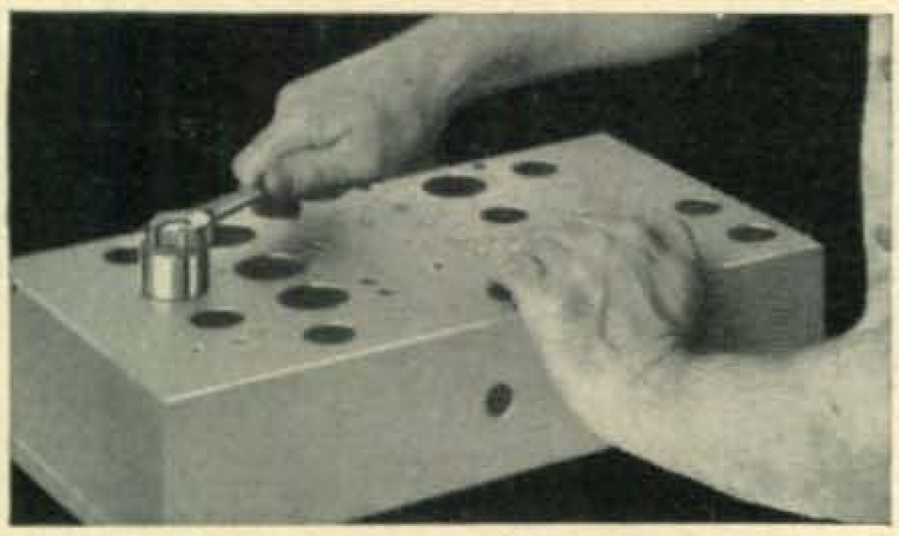

quickly make round, square, key and "D" openings with Greenlee Radio Chassis Punches

In 1½ minutes or less you can make a smooth, accurate hole in metal, bakelite or hard rubber with a GREENLEE Punch. Easy to operate . . . simply turn with an ordinary wrench. Wide range of sizes. Write for details. Greenlee Tool Co., 2367 Columbia Ave., Rockford, Ill.

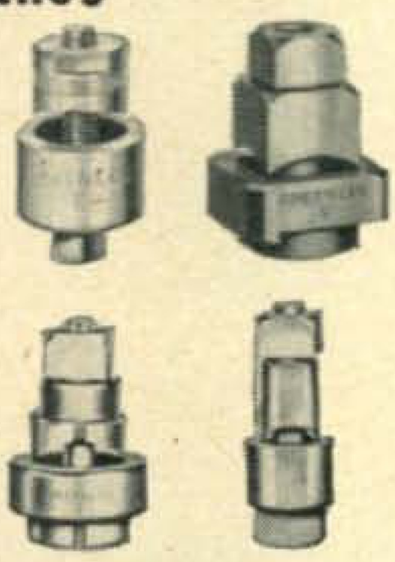

GREENLEE

Keep your Shack Neat

with a

$7.95

in U. S., Canada and Pan-American Union. Others, $1.00 more.

BOUND VOLUME

You'll appreciate the handy convenience of this compact volume of the 1954 issues of CQ magazine handsomely bookbound in tan colored cloth . . . distinctive gold foil lettering embossed in a black panel strip . . . available NOW!

Limited quantity of 1953 volumes available.

Immediate delivery on all orders.

CQ MAGAZINE

67 West 44th Street, New York 36, N. Y.

[from page 15]

of electrons. Don't be fooled by the 15,000 ohm cathode resistors; all they do is pull the 6AS7 cathodes back down on the down-swing of the audio wave. It's going uphill that's the tough job; the 6AS7 plate current does that job.

Since no two 6AS7 halves will exactly match, and the cathode potential is the grid potential on the 810's, a split secondary transformer was called for. Adjusting the two potentiometers allows you to adjust the 810 grid bias to exactly what you want it to be—in this case, –35 volts.

Incidentally, the 6AS7 isn't supposed to have 600 volts across it; that's perfectly satisfied by the fact that most of the negative 200 volts appears across those 15,000 ohm resistors.

The transformer I had allowed me to use a 6J5; a 6V6 triode connected would have done as well, or a 6SN7. Since the 6AS7 is acting as a cathode follower, it takes no driving power—it just calls for about 250 volts.

The circuit's essentially about as simple as a circuit can get, yet was designed to handle the toughest driver problem you're apt to meet, so long as you stay within the 1-kw. law. This modulator driver circuit will, because of the cathode-follower feature, drive any pair of modulator tubes, so long as they don't call for more than about 200 volts of grid drive—which is enough to drive 810's modulating a full kilowatt. The same circuit, with a 6SN7 plugged in the 6AS7 socket, will drive a pair of 807's. It comes as close to being the universal modulator-driver system as any, and supplies the bias required for the modulator tubes.

With that final link of the chain nailed down solid—Gravel Gertie moved out, and the reports started sounding sweet in the receiver again. And the full-modulation signal definitely gets through where the uncompressed signal won't. There's a switch on my pre-amp that cuts out the compressor circuit . . . naturally. How could you be sure the thing worked if you couldn't try it with and without on the same contact, under the same conditions?

NOVICE SHACK

[Continued from page 44]

When he stood by, I told him it was unnecessary to repeat everything, signed and called QRZ?

Another KN4 called. I gave him 579X, but the whole thing was repeated again. I finally signed with him at 0556, to leave for work. Two QSO's in 30 minutes, when a 1 X 1 call, Tnx, RST, QTH, and name sent singly would have done just as well, and I would have been able to give a half dozen more Novices a KV4 QSO.

"I do not mind slowing down to a couple words a minute for those who are obviously new and need the slow down and repeats to complete the contact, but I do get impatient with those who do not use their heads a little and consult an RST table. 73."

The RST method of giving signal reports is described in the front of the ARRL log book, in the *Call Book*, and in various handbooks.

Doug Brown, WN3BXM (12), 101 Primrose St., Chevy Chase, Md., writes, "In four weeks on the air I have worked 23 states and Canada. I use a *Johnson* Adventurer

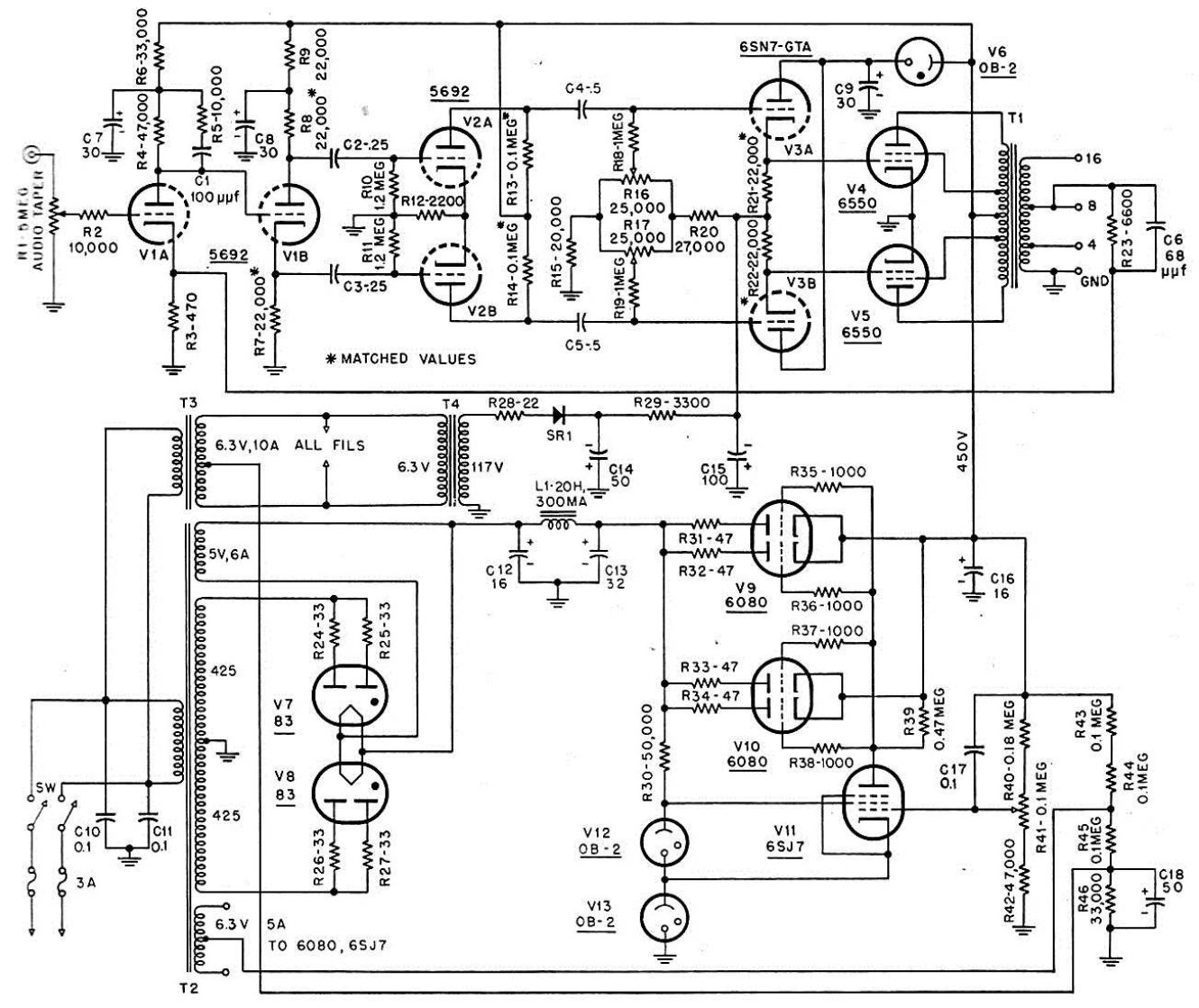
R1-.5MEG AUDIO TAPER
R2 10,000
R3-470
R4-47,000
R5-10,000
R6-33,000
R7-22,000*
R8 22,000*
R9 22,000*
R10 1.2 MEG
R11 1.2 MEG
R12-2200
R13-0.1MEG*
R14-0.1MEG*
R15-20,000
R16 25,000
R17 25,000
R18-1MEG
R19-1MEG
R20 27,000
R21-22,000*
R22-22,000*
R23-6600
C1 100 µµf
C2-.25
C3-.25
C4-.5
C5-.5
C6 68 µµf
C7 30
C8 30
C9 30
V1A
V1B
V2A
V2B
5692
5692
6SN7-GTA
V3A
V3B
V4 6550
V5 6550
V6 OB-2
T1
16
8
4
GND
* MATCHED VALUES
T3
6.3V,10A ALL FILS
T4
6.3V
117V
R28-22
R29-3300
SR1
C14 50
C15 100
450V
L1-20H, 300MA
C12 16
C13 32
5V,6A
425
425
6.3V 5A
TO 6080, 6SJ7
T2
V7 83
V8 83
R24-33
R25-33
R26-33
R27-33
SW
3A
C10 0.1
C11 0.1
R31-47
R32-47
R33-47
R34-47
R35-1000
R36-1000
R37-1000
R38-1000
V9 6080
V10 6080
R30-50,000
R39 0.47MEG
C16 16
C17 0.1
R40-0.18 MEG
R41-0.1 MEG
R42-47,000
R43 0.1 MEG
R44 0.1MEG
R45 0.1MEG
R46 33,000
C18 50
V11 6SJ7
V12 OB-2
V13 OB-2

Audio and Transmitter Adjustments

This section includes information on the adjustment of audio circuits inside the modulation system as well as suggestions for getting the most from the transmitter and modulator when operated normally as a single piece of equipment. Sometimes small adjustments make a large difference in the elimination of distortion, especially at high modulation percentages.

EXTRACTS FROM GENERAL RADIO REGULATIONS
(Cairo Revision)

ARTICLE 5 — Classification of Emissions

¶1. Emissions shall be classified below according to the purpose for which they are used, assuming their modulation or their possible keying to be only in amplitude.

1. Continuous waves:
   - Type A0.—Waves the successive oscillations of which are identical under fixed conditions.[1]
   - Type A1.—Telegraphy on pure continuous waves. A continuous wave which is keyed according to a telegraph code.
   - Type A2.—Modulated telegraphy. A carrier wave modulated at one or more audible frequencies, the audible frequency or frequencies or their combination with the carrier wave being keyed according to a telegraph code.
   - Type A3.—Telephony. Waves resulting from the modulation of a carrier wave by frequencies corresponding to the voice, to music, or to other sounds.
   - Type A4.—Facsimile. Waves resulting from the modulation of a carrier wave by frequencies produced at the time of the scanning of a fixed image with a view to its reproduction in a permanent form.
   - Type A5.—Television. Waves resulting from the modulation of a carrier wave by frequencies produced at the time of the scanning of fixed or moving objects.[2]

   Note.—The band widths to which these emissions correspond are indicated in appendix 3.
2. Damped waves:
   - Type B.—Waves composed of successive series of oscillations the amplitude of which, after attaining maximum, decreases gradually, the wave trains being keyed according to a telegraph code.

¶2. In the above classification, the presence of a carrier wave is assumed in all cases. However, such carrier wave may or may not be transmitted.

This classification does not contemplate exclusion of the use, by the administrations concerned, under specified conditions of types of waves not included in the foregoing definitions.

---

[1] *These waves are used only in special cases, such as standard frequency emissions.*
[2] *"Objects" is used here in the optical sense of the word.*

Table of Frequency-Band Widths Occupied by the Emissions

The frequency bands necessary for the various types of transmissions, at the present state of technical development, are indicated below. This table is based solely upon amplitude modulation. For frequency or phase modulation, the band widths necessary for the various transmissions are many times greater.

Type of transmission	Total width of the band in cycles for transmission with 2 side bands.
A0 Continuous waves, no signaling	
A1 Telegraphy, pure, continuous wave	Numerically equal to the telegraph speed in bands for the fundamental frequency, 3 times this width for the 3rd harmonic, etc. (For a code of 8 time elements (dots or blanks) per letter and 48 time elements per word, the speed in bands shall be equal to 0.8 times the speed in words per minute.)
Morse code.	
Baudot code.	
Stop-start printer.	
Scanning-type printer	300-1,000, for speeds of 50 words per minute, according to the conditions of operation and the number of lines scanned (for example, 7 or 12). (Harmonics are not considered in the above values.)
A2 Telegraphy modulated to musical frequency	Figures appearing under A1, plus twice the highest modulation frequency.
A3 Commercial radiotelephony	Twice the number indicated by the C.C.I.F. opinions (about 6,000 to 8,000).[1]
Broadcasting	15,000 to 20,000.
A4 Facsimile	Approximately the radio between the number of picture components[2] to be transmitted and the number of seconds necessary for the transmission.
A5 Television	Approximately the product of the number of picture components[2] multiplied by the number of pictures transmitted per second.

[1] *It is recognized that the band width may be wider for multiple-channel radio-telephony and secret radiotelephony.*
[2] *Two picture components, one black and one white, constitute a cycle: thus, the modulation frequency equals one-half the number of components per second.*

Phase Inverter Adjustment

Conventional phase-inverter amplifiers consist of two triodes, with single-ended input and double-ended output. Phase reversal is obtained by driving one triode with a portion of the output from the other triode.

The inverter shown in the diagram is an interesting circuit in which a two-tube paraphase amplifier affords double-ended drive from single-ended input. Unbalance in the cathode-coupled paraphase stage is adjusted by feeding back a small compensating signal from the potentiometer.

It is advantageous to make the cathode resistance of the paraphase stage sufficiently high that the first section is able to operate as a cathode follower with the second section disconnected. A good frequency characteristic is thus assured, and a minimum compensating signal required. This portion of the circuit is inherently highly degenerative and affords an output swing which would otherwise be obtained from one section in the absence of current feedback.

[*Continued on page 63*]

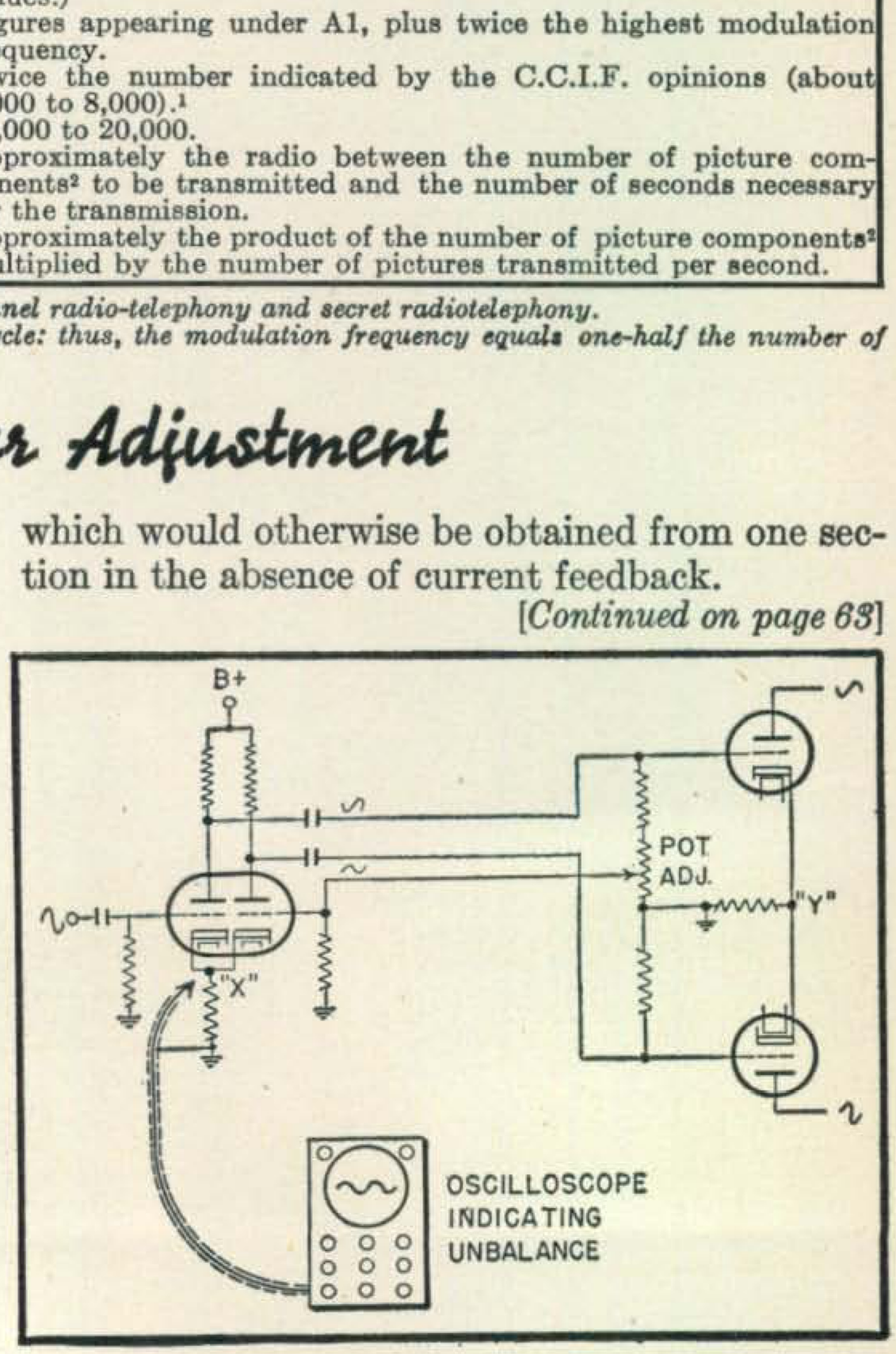

air cooling must be used between the flanges. The 417A, for example, will average about 0.3 mc per volt drift for the reflector voltage and 0.1 mc per volt drift for the acceleration or beam voltage, although the total electrical tuning range is about 3.0 mc when the klystron is oscillating. Power supply modulation must be kept to a very low order and is accomplished by regulation within 0.2 volt and a residual peak-to-peak ripple of less than 0.2 volt at maximum ratings.

Tuning

Electrical tuning over a range of more than 0.5 mc is not employed, since this would mean a comparatively large scale power output variation. Of the six klystrons seen on the market today, all may or may not come with the micrometer tuner, known as Sperry Model 12. Primarily these reflex klystrons are coarse-tuned by the spring-loaded screwdriver adjustments between the flanges. The screws rest upon temperature compensating struts, which offset some of the frequency drift. One of the struts in turn rests upon a lever which is pressed backward in the plane of the axis of the klystron and serves as a fine tuning adjustment.

The klystron is not as difficult to handle as one might first believe. War-stimulated development has drastically reduced the number of "bugs" and has certainly brought the price down. Though scarcely the instrument to experiment with if living 100 miles from the nearest ham (who probably is a die-hard 80-meter man, anyway), fellows in and around densely ham-populated big cities might easily find someone inclined to take a crack at the centimeter wavelengths.

PHASE INVERTER

[*from page 26*]

The output stage is not degenerative to an appreciable extent, since both grids are driven equally and oppositely.

In the absence of the compensating signal, a voltage will be seen at X on the scope screen; this is the grid-cathode voltage of the second section of the paraphase amplifier. To balance up the inverter, the compensating voltage is now increased until no voltage can be detected at X. The adjustment should be checked for a low, mid-range, and a high frequency. Otherwise, a square wave generator may be used for balancing adjustment.

Note that if the plate load resistance of the paraphase stage are selected for the purpose, that no compensating signal is required and the inverter is automatically balanced. However, when changing tubes, unbalance can easily arise, and the compensating signal adjustment will be needed.

"TAB" That's A Buy

Combination TAB Special

Raytheon 866A filament transformer 115V60C pri, 2.5V 11A. sec. and Two new RCA 866 tubes	$ 5.90
Raytheon transformer only	$ 3.25
W.E. Silver mica condensers .02461-.01644, .0490 200 V wkg—50 x 65C three for	$ 1.00

That's A Buy

New W.E.Beachmaster Amplifier Navy Parts	
New W.E. Dynamic microphone D-173340A Complete with 50′ cable, desk stand or chest plate and feedback reduction attachment, freq. range 50 to 9000 cycles "TAB" Special	$11.95
With W.E. input mike trans. KS-9450	$13.95
Dynamic mike cartridge only D173127	$ 4.95
All 3 units Mike, Transf, rep. Cartridge	$18.00
W.E. pp. inpt. tnsf. 100-10000 cy-KS-9448	$ 2.50
W.E. pp. input driver 6V6's to pp. 805 grids freq. 100-10000 cy tnsf KS-9449	$ 4.50
Both units KS-9448 and KS-9449	$ 6.50
W.E. Vacuum Time delay fil Relay 115V-AC	$ 1.49
W.E. Oil Cond 4mfd 400V Wkg D162003 Two for	$ 1.00
Sprague Oil Cond. 4mfd 1500V wkg Two for	$ 4.50
CD TJH Oil Cond. 6mfd 1500V wkg Two for	$ 5.95
Solar 25mmf. Cond. 5000V wkg HF ins. Three for	$ 1.00
Switch 10 pos. Ceramic Xmitting HV&CUR	$ .97
872A new G.E. Gov't insp gtd	$ 4.50
VT127A-100W at 150mc's new Eimac	$ 4.95
3A4 new Tungsol G'inspt gtd' Two for	$ 1.10
6J4 tube RCA new G'inspt (LP.$8.35)	$ 2.49
807 tube, new G'inspt with millen cap	$ 1.95
866A tube RCA new G'inspt @ $1.40—Two	$ 2.70
Cathode Ray tube new G'inspt 5AP1-BP1-BP4	$ 9.95
Cond GE oil 3mfd-330VAC-1000VDC@.95 Two	$ 1.75
Cond GE Pyranol 2mfd-2000V-wkg Two for	$ 4.25
Cond Sprague oil 4mfd1500Vwkg Two for	$ 4.50
Cond Oil CD.TJH 6mfd.1500Vwkg Two for	$ 5.95
Cond GE Pyranol 4mfd600Vwkg Two for	$ 1.90
Crystal diode IN21 & Holder Two pair for	$ 1.25
Crystal diode IN21 navy insp. gtd. three for	$ 1.00
Key click filter chokes & Condsrs	$ .25
Osc. Crystals gtd any freq 2-9mc's	$ 1.49
GE-DC-DNI One ma G'insp 1½"B'C @ $3.00 Two for	$ 5.50
Choke cased 10Hy 250Ma 150ohms G'insp	$ 1.89
Choke cased 4Hy ½Amp 30ohms	$ 2.95
Daven 13circuit 25Amp switch Two for	$ .98
Fed.Tel. HF Xmitting 10pos switch Hvi'duty	$ .98
Forced Air blower with motor	$ 9.95
Rotary beam UHF Radar Coupler	$ 3.95
OHmite 25W Rheostats 250 or 350ohm	$ 1.49
Parts for Conversion BC412 Oscilloscope	$15.75
WE Trans 115V60CyPri, 5V26A Hv Ins.	$ 4.50

Limited Qty. "TAB" Special

Navy TBY portable ultra Hi-Freq 28to80mc's transceiver Voice&CW Spot calibrated, including crystal calibrator, all tubes, adj. ant; phones, mike, carrying case	$49.50
additional spare parts, Vibrator supply, Trunk, Antenna, manual and other spares	$25.00
Westinghouse BA33 AC Meters 150V 2½"B'C	$1.98
GR 200 CUS Variac 0-135V60C860W G'in LN	$18.00

$1.00 Min. orders FOB, N.Y.C. Include 25% on COD orders, plus postage. Send for catalogue No. 300. Don't wait, rush orders as quantities are limited.

"TAB" Dept. Q7
Six Church Street, New York 6, New York

FREE! SYMBOLS CHART No. 7

SUN RADIO
& ELECTRONICS CO., Inc.
122-124 DUANE ST. · NEW YORK 7, N. Y. · BArclay 7-1840

THE *item* FOR THE *price!*
Round oil filled condenser with mounting bracket 8 mfd 600 VDC for only **$1.27**
FORDHAM RADIO SUPPLY CO.
W2GRB
2269 Jerome Ave. New York 53, N. Y.

Adjusting the 'Phone Transmitter for Best Modulation Performance

By W. C. Lent*

THE transmission of intelligence by radio, whether that intelligence be in the form of an entertainment program or a definite message, depends upon some form of modulation of a so-called carrier wave. By modulation is meant the process by which the instantaneous character of the carrier is made to change in accord with the variations of the intelligence to be transmitted. The character of the modulated wave may be completely described for a particular instant if the phase, frequency and amplitude at that instant are known. Up to the present time, experience has indicated that the most suitable form of modulation is achieved by varying the instantaneous wave amplitude in response to the variations of the signal energy to be transmitted. Experience has likewise indicated that it is desirable to maintain carrier frequency and phase as nearly constant as possible during the modulation cycle.

OUTLINING THE FUNDAMENTALS

Amplitude modulation of a constant carrier-wave by speech results in the production of side-bands of varying width and amplitude. The side-band frequencies are symmetrically displaced from the carrier frequency on both sides by frequency intervals equal to the modulation frequencies at a particular instant. The side-band amplitude is determined solely by the degree of modulation, the proper maximum limit being reached when the total side-band amplitude is equal to the carrier amplitude, which condition represents 100% modulation.

Since the intelligence-bearing portion of the modulated wave is not the carrier but the side-bands, it follows that the greater the side-band amplitude the greater is the useful portion of the wave. For a wave completely modulated (that is, 100%), two-thirds of the total wave energy is concentrated in the carrier with the remaining one-third in the side-bands *when the modulating signal is a single pure tone.* The side-band power varies, between this one-third maximum and zero, directly as the square of the modulation degree.

If the side-band power is calculated it is found that the following relations hold:[1]

% Modulation	*% Total Power in Carrier*	*% Total Power in Side-Bands*
0	100	0.0
25	97	3.0
50	89	11.0
75	78	22.0
100	66.6	33.3

Hence, in a wave modulated 25% by a single tone, only 3% of the total power is useful power. For 50% modulation the useful power is increased to 11% of the total with single-tone modulation. A 100% modulated wave delivers 11 times as much signal energy as one modulated 25%. With sinusoidal modulation applied to a 100-watt carrier, we find that for:

A Modulation Percentage of	*The Side-Band Power Is*
0%	0.00 watts
25%	3.12 watts
50%	12.50 watts
75%	28.10 watts
100%	50.00 watts

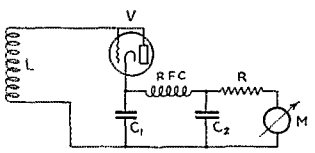

FIG. 1—CIRCUIT OF THE SIMPLE DIODE-TYPE CARRIER-SHIFT INDICATOR WHICH CONSTITUTES "MEANS TO INSURE THAT THE TRANSMITTER IS NOT MODULATED IN EXCESS OF ITS MODULATION CAPABILITY," IN ACCORDANCE WITH THE NEW REGULATIONS

Typical circuit values are as follows:
L—Coupling coil to suit frequency. It may be tuned by a midget condenser and coupled to the transmitter by a link.
C1, C2—0.001-μfd. fixed condensers.
R—10,000-ohm non-inductive resistor. Higher resistance improves linearity but reduces current through meter.
M—0–1 d.c. milliammeter.
V—Type 56 or similar triode with grid and plate tied together.

Certain conclusions can be drawn and set down as general rules. They are:

(1) Doubling the modulation degree (up to 100% maximum) for a given carrier power increases the signal level 100% without increasing the nuisance range of the station.

(2) Doubling the carrier power while holding

* General Communications Laboratories, Ridgefield, N. J.

[1] These power relations hold strictly only with a sinusoidal (pure-tone) modulating signal. For speech modulation the side-band power values are approximately halved, as outlined in "Technical Topics," June *QST*, and discussed elsewhere in this issue.—EDITOR.

the modulation degree constant results in only a 41.4% increase in signal level and an equal increase in the nuisance (heterodyne) field intensity.

(3) To obtain a signal level increase equivalent to that obtained by doubling the modulation degree with the carrier power constant, requires a carrier increase to a value 4 times the original power while holding the modulation degree constant. In other words, doubling the modulation degree (up to the maximum permissible limit of 100%) pays the same dividend in signal level as a 4-to-1 carrier power increase.

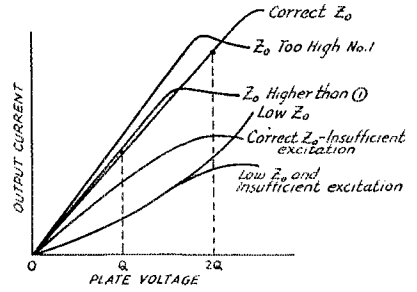

FIG. 2—ILLUSTRATING THE MANNER IN WHICH EXCITATION AND LOAD IMPEDANCE AFFECT THE LINEARITY OF THE CLASS-C MODULATING STAGE

The following formulas are given to enable the station operator to calculate the percentage gain in signal strength to be expected for increases in carrier power or modulation degree, or both. They are:

$$S_m = 100\,\frac{M}{M_o} - 100 \text{ for change in mod. degree.}$$

$$S_c = 100\sqrt{\frac{P}{P_o}} - 100 \text{ for change in carrier.}$$

$$S_{c+m} = 100\frac{M}{M_o}\sqrt{\frac{P}{P_o}} - 100 \text{ for changes in both.}$$

where:

S_m = Signal level change due to change in modulation.
S_c = Signal level change due to change in carrier.
S_{c+m} = Signal level change due to changes in both.
M = Proposed modulation degree in percent.
M_o = Present modulation degree in percent.
P = Proposed carrier power.
P_o = Present carrier power.

As an example of application, take the following proposition:

Suppose speech power is available to modulate a 10-watt carrier completely. Suppose also that a 50-watt carrier is proposed in the hope of greatly increased signal but with speech power available for only 50% modulation. Going to the formulas it is found that the 50-watt carrier modulated 50% will deliver only 11.7% more signal level than the 10-watt carrier modulated 100%. This corresponds to an increase in signal level of only 0.96 db—which is hardly perceptible. Economy of operation, therefore, definitely would favor the lower carrier power.

This general information may be summarized as follows, keeping in mind that 100% modulation is the maximum limit:

(1) In general, increased signal level may be most economically obtained by increasing modulation degree rather than carrier power.

(2) Signal level is directly proportional to the modulation degree.

(3) Side-band power, the only signal-producing power in the wave, varies directly as the square of the modulation degree.

(4) Signal level varies directly as the square-root of the carrier power for a given modulation degree.

(5) The heterodyne nuisance range is not affected by changes in modulation degree but does vary as a function of the square-root of the carrier power. Therefore, the higher the carrier power the greater will be the nuisance range.

ADJUSTMENT FOR PROPER MODULATION

What probably concerns all of us most is how to get the best results from the equipment as it now stands. If plate modulation is to be undis-

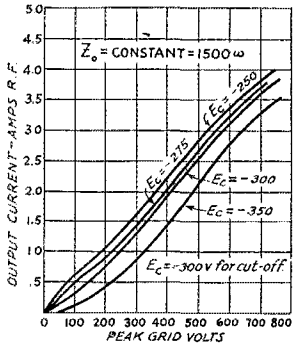

FIG. 3—ILLUSTRATING THE EFFECT OF BIAS ON THE LINEARITY OF THE CLASS-B R.F. STAGE

torted, the r.f. amplifier's plate circuit must behave as a pure resistance; that is, the ratio of plate voltage to r.f. output current must remain constant for plate voltages from zero to twice the operating value. This condition can only be met when the grid is driven to saturation; that is, when sufficient excitation is applied so that any addition fails to result in increased output power. Given grid saturation, the output impedance must be adjusted by varying the coupling to the load (antenna) until the linear relation between plate voltage and current is obtained at the same

time that the power input and effective modulating resistance called for by the design are established. Furthermore, this relation can never be obtained with the Class-C r.f. amplifier unless grid bias is secured automatically by means of a grid resistor. Fixed C-battery bias does not give the necessary change at low instantaneous plate voltages where the peak grid voltage almost equals the minimum plate voltage.

Assuming all these conditions to be fulfilled, the output may be tested for linearity by means of a very simple device which should have a place in every 'phone station. This instrument is essentially a linear rectifier or detector of the type diagrammed in Fig. 1.

If modulation is symmetrical, which it must be for distortionless transmission, the positive peaks of the modulation envelope will have the same amplitude as the negative peaks for corresponding modulation cycles. That is, the envelope amplitude will vary equally on both sides of the unmodulated carrier amplitude value. It follows that the average r.f. amplitude during modulation will be equal to the unmodulated carrier amplitude. This fact provides a very convenient and certain method for checking linearity by means of a carrier-shift indicator.

The linear rectifier is coupled to the stage under test and a convenient deflection obtained on *M* with the carrier unmodulated. If modulation is applied no change in the rectifier output will appear unless the modulation characteristic of the modulating amplifier is non-linear and the modulation capability is exceeded. This change in deflection, if it occurs, is known as carrier-shift. By carrier-shift is meant the shift in the average envelope amplitude during the modulation cycle. It is not to be confused with frequency shift, which has nothing to do with the processes under discussion. A positive shift indicates that the time-average of the positive half cycle is greater than that of the negative half cycle, and conversely.

In the interpretation of results the following points, in conjunction with Fig. 2, will be found helpful when testing Class-C amplifiers. Class-B amplifiers will be discussed later.

(1) A negative shift usually indicates insufficient grid excitation or too high an output impedance, or both. If it is known from previous test that grid saturation exists for the plate voltage in use, then negative shift definitely indicates a load impedance in excess of the proper value for linearity.

(2) A positive shift usually denotes too low an output impedance, or overmodulation which causes the negative peaks to cross the zero axis for an appreciable portion of the modulation cycle.

Now let us say just a word about adjusting output impedance to the proper value. In practice, most radio-frequency amplifiers work into a tuned circuit adjusted for resonance at the working frequency. When resonance exists the load presented to the tube is a pure resistance having a numerical value equal to

$$Z_o = \frac{X^2_P}{R_e}$$

where:

Z_o = the output impedance.

X_P = the reactance included between plate and filament in the case of single-ended amplifiers or from plate to plate in balanced systems.

R_e = the total closed circuit resistance at the working frequency, which includes both the inherent resistance of the circuit and the resistance coupled in by the load.

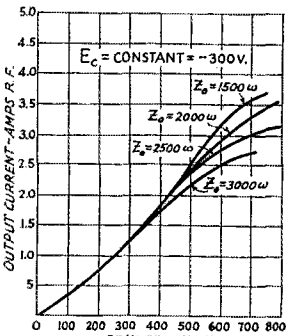

FIG. 4—SHOWING HOW LOAD IMPEDANCE AFFECTS THE LINEARITY OF THE CLASS-B R.F. STAGE

Increasing the reactance, that is, the number of turns, increases the output impedance; and vice-versa. Increasing the coupling to the load reduces the effective output impedance; and the converse of this also is true. A fault in some transmitters designed for 'phone operation is that high-*C* output circuits are used, in which case, to obtain resonance, the inductances are so small as to make it impossible to adjust the output impedance properly.[2]

If the foregoing procedure has been rigorously followed, the modulating amplifier should be able to do its job properly. The actual modulation degree can be checked with a cathode-ray oscilloscope or, approximately, with the usual current-squared galvanometer, *provided* a linear rectifier is also used with the latter to insure that no carrier shift is present. A current-squared instru-

(Continued on page 76)

[2] Too high plate load impedance is also not uncommon, especially in high-power transmitters where inadequate tank capacitance is provided. As has been shown by H. A. Robinson ("Operating Characteristics of R. F. Power Amplifiers," *QST*, April 1934), there is an optimum *L-C* ratio, considering excitation requirements, efficiency, and harmonic output. This generally suitable optimum ratio requires tank capacitances of approximately 200 μμfd. at 3.5 mc., 100 μμfd. at 7 mc., 50 μμfd. at 14 mc., the tank capacitance being inversely proportional to frequency.—EDITOR.



Mr. E. H. Rietzke, President of CREI and originator of the first thorough course in Practical Radio Engineering.

"Good Intentions" won't get you a Good Job!

You have to be "TECHNICALLY QUALIFIED" to get to the top in Radio today. This fast-growing industry demands that the GOOD jobs go only to TECHNICALLY TRAINED men, who have kept pace with Radio by intensive training. The hundreds of CREI men who now hold responsible engineering jobs PROVE that radio executives recognize the superiority and ability of CREI-trained men.

RIGHT NOW . . . WRITE NOW
FOR FREE ILLUSTRATED CATALOG

This booklet will answer every question and fully describe our courses and 3 plans of study . . . as well as show you how easy it is to pay for them.

CAPITOL RADIO
ENGINEERING INSTITUTE
14th and Park Road, N. W. Dept. Q-8
WASHINGTON, D. C.

CREI

DYKANOL

CORNELL-DUBILIER again leads the field by its introduction to the hams, of a series of capacitors that are the latest in condenser design.

Striking compactness, higher dielectric strength and constant, with marked economy are the outstanding features of Dykanol Hi-voltage x-mitting condensers.

Also . . . . . .

- **DYKANOL is non-inflammable.**
- **DYKANOL x-mitting condensers are hermetically sealed.**
- **DYKANOL condensers cannot be affected by high temperatures.**

Type TC 30020
2MFD 3000V.D.C.
Your cost . . .
$13.53
At all C-D authorized distributors.

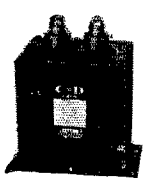

Get your copy of the new No. 128 catalog describing Dykanol x-mitting condensers in complete detail.

CORNELL-DUBILIER
CORPORATION
4373 BRONX BOULEVARD
NEW YORK

eliminated when the screen voltage divider specified was installed in place of a series dropping resistor first tried. No other changes or adjustments were found necessary.

Working into the normal Class-C amplifier load—600 volts, 140 ma., or approximately 4300 ohms—the output taps on the transformer are set at Nos. 1 and 5, giving an impedance ratio of 1.33:1 from total primary to secondary. This corresponds to a turns ratio of 1.15–1 and makes the per-tube load resistance in the Class-B stage slightly over 1400 ohms, a suitable value. As previously mentioned, the Class-B plate current at 100% modulation is approximately 80 ma.; that is, the plate current should not swing above 80 ma.; as indicated by the plate meter, during speech. Grid current should be between 10 and 20 ma. under the same conditions. It is desirable, of course, that the plate supply for the Class-B stage have good regulation.

During modulation the plate current to the Class-C stage should show no change. With normal speech the antenna current rise will be of the order of 5%, which, as has been pointed out in these pages previously [1], is about all that should be expected at 100% modulation with voice input and an ordinary thermo-meter. If all these conditions can be satisfied, there need be no fear that the transmitter is not being modulated properly—and up to the full legal limit.

Adjusting the 'Phone

(Continued from page 86)

ment or any other effective current or voltage indicating device will show both the increase due to modulation and carrier shift at the same time and there is no way of separating them. Also, these methods of indicating modulation are almost worthless on anything but steady tone because of the inherent inertia of thermo-instruments.

CLASS-B LINEAR R.F. AMPLIFIERS

When more power is wanted, resort is usually had to some form of linear amplifier. Now just because a Class-B r.f. amplifier is operated at the recommended grid and plate voltages, it does not necessarily follow that the dynamic output characteristic will be linear as must be the case if the output is to be undistorted. In fact the contrary is usually true. Output impedance and grid bias will determine almost completely the shape and degree of linearity of the dynamic output characteristic. While it is usually recommended that Class-B amplifier be biased to cut-off, for instance, it is found that a bias slightly less than cut-off value is likely to yield greater over-all linearity. The effect of bias will be seen from the characteristics shown in Fig. 3. The best operating bias is the one which yields the dynamic characteristic having the longest straight portion. Likewise, the characteristics illustrated in Fig. 4 show the effect of output impedance on linearity.

The most ideal way in which to choose the operating conditions of bias and output im-

New HIGH IMPEDANCE VELOCITY MICROPHONE

(Model RB-H)

Operates WITHOUT PRE-AMP

A HIGH IMPEDANCE VELOCITY MICROPHONE WHICH OPERATES DIRECTLY INTO GRID OF TUBE

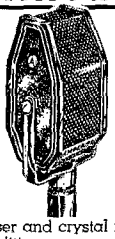

REQUIRES NO PRE-AMPLIFIER WHEN USED WITH REGULAR HIGH GAIN AMPLIFIER (100 DB.)

Replaces condenser and crystal microphones—NO CHANGES or additions necessary! ELIMINATES INPUT TRANSFORMER and its losses. Therefore requires 12 db. less over-all amplification. Eliminates inductive hum. No feedback. Life-like, natural reproduction. Write for Bulletin H.Q.

LIST $42.00 with coupling.

AMPERITE Corporation 561 BROADWAY N.Y.

AMPERITE 1 POINT Velocity MICROPHONE

SARGENT-10

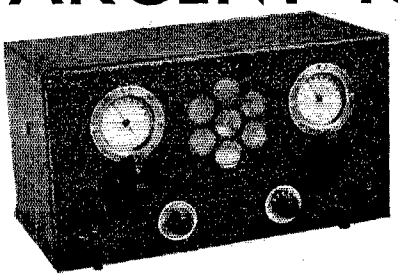

COMMUNICATIONS RECEIVER

— FEATURES —

- Choice of Three Tuning Ranges
- An A-1 Amateur Receiver
- Illuminated Airplane Dials
- Tuning Dial Calibrated in M.C.
- Adjustable Calibrated Band Spreader
- Built-in Jensen Dynamic Speaker
- Wave Changing Switch — No Plug-in Coils
- Built-in Hum-free Power Supply
- Large Tuning Knobs
- Headphone Jack
- Attractive All-Metal Cabinet
- Doublet or Marconi Antenna
- Ideal for Shipboard Installations
- Supplied for Any Operating Voltage — A.C., D.C., or Battery

The BAND SPREADER, a new development, is adjustable so as to give wide spread on Amateur Bands — 20 meters 40°; 40 meters 43°; 75 meter Phone Band 47°. Amateur Bands are calibrated on the dial for direct reading in M.C.

The circuit employs a 6D6 stage of sharply tuned R.F. with antenna trimmer, 6C6 regenerative detector with screen regeneration control, a 76 audio driver and a 42 audio output tube. An 80 rectifier is used.

Model 10SA (15–550) complete with tubes, Jensen dynamic speaker, power supply — entirely self contained in metal cabinet — Nothing else to buy..... $34.50

Model 10MA — same as above except for tuning range, — 15–1500 meters..... $39.50

Ranges from 15 to 15,000 meters on special order.

SARGENT 8–34 Super-Het (15–550). Complete..... $54.50

MARINE MODEL 8–34 (15–1500). Complete..... $62.50

MARINE RADIO COMPANY

Eastern Distributors

124–11 101st Avenue, Richmond Hill, New York

Telephone: CLeveland 3-2400. Cable Address: "Elecmarine."

pedance for a Class-B r.f. amplifier is to take the actual dynamic output characteristics of the tube to be used. This involves the measurement of the grid excitation voltage which, without proper equipment,[3] is not an easy matter. Therefore, certain general rules governing the choice of both the tube and operating conditions will be given:

(1) The higher the output impedance, the more nearly linear will be the dynamic characteristic, but at some sacrifice in output power.

(2) Between two tubes of equal power rating, the one having the higher mutual conductance will give the more nearly linear characteristic for a given output impedance.

(3) Bias voltages slightly *less* than the cut-off value will yield more linear characteristics than those obtained with cut-off bias.

(4) The length of the straight portion of the dynamic characteristic may be increased by an increase in plate voltage. Whether or not this is permissible will depend upon the insulation and dissipation rating of the tube.

(5) Since the maximum operating efficiency of a Class-B amplifier is about 66% before excessive non-linearity occurs, the unmodulated carrier excitation should be adjusted to that value which yields a plate efficiency of 33%. On 100% positive modulation peaks the excitation voltage is doubled, thereby causing the plate efficiency to increase to the 66% maximum.

(6) If distortionless transmission is to result, the driving source must be capable of delivering full excitation on modulation peaks. Since the input impedance of a Class-B amplifier varies with excitation, it is essential that the driving source have good regulation; that is, that the impedance variations will not destroy the output characteristic so carefully arrived at earlier. This is best accomplished by dissipating large amounts of power in the output circuit of the driving stage. Resistance in series with the tuned circuit or in shunt to it, across the Class-B grids, will serve equally well to provide this condition. A satisfactory state is usually obtained when the power dissipated in the input circuit of the Class-B stage is at least one-fifth of its output power.

The use of the linear rectifier will aid greatly in the proper adjustment of a Class-B amplifier. Its behavior on modulation may be interpreted as follows:

(1) A negative shift usually indicates too high an output impedance, too low a bias or excessive excitation, or all three.

(2) A positive shift usually indicates too low an output impedance or too high a bias, or both.

In conclusion a few remarks about the measurement of modulation at remote points might be in order. Reports from a station claiming to be able to *measure* modulation on the air are apt to be very misleading and greatly in error unless several conditions are met in the measuring system.

First of all, the receiver from antenna to the output of the measuring equipment must be

[3] A method of measurement is described by H. A. Robinson in the article, "Operating Characteristics of R. F. Power Amplifiers," Feb., 1934.—Editor.

The Mu-X

Hits a New High in Microphone Performance and Value

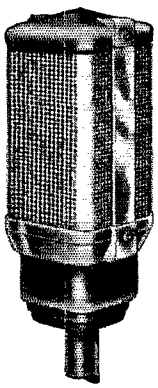

Announced only last month the Turner Mu-X (multiple crystal) microphone has attracted widespread interest among both amateur and commercial stations. It offers several definite improvements over any microphone heretofore available, at a price lower than any instrument of similar characteristics. Available for either push-pull or single grid input, with 4, 6 or 8 crystal units. Licensed under patents of the Brush Development Company. Write for descriptive circular and prices.

THE TURNER COMPANY

CEDAR RAPIDS, IOWA, U. S. A.

HOW IS YOUR SUPPLY OF IDEAS?

If they ever run low, make sure that you have a copy of HINTS & KINKS handy. It is chock full of money-saving ideas and stunts of interest to you. There are many times when you will find it invaluable. The price is 50c postpaid.

AMERICAN RADIO RELAY LEAGUE

West Hartford **Connecticut**

strictly linear. Any carrier shift not present in the out-put of the station under measurement but generated by non-linearity in the receiver will cause the measurements to be in error by an amount equal to the shift generated and in the same direction.

Linearity in a receiver can be obtained if the following requirements are fulfilled:

(1) The dynamic output characteristics of all the radio stages, whether they be working at high or intermediate frequency, must be strictly linear over the range of the signal grid swing. This requires a proper choice of tubes together with the adjustment of the load impedance into which each tube works.

(2) If the receiver is of the superheterodyne type, the relation between translation gain and signal input of the first detector must be a straight line when plotted. This can be obtained by a proper adjustment of the first detector bias and the input to the first detector from the high-frequency heterodyning oscillator.

(3) The second detector must be practically linear. A diode with proper load resistance may be used.

(4) The measuring circuits themselves must be practically linear and must be capable of following the fast modulation peaks.

Only if and when the person reporting your modulation has taken all these precautions is it safe to accept his report as a true indication of your transmitter performance. The moral is—use your own linear rectifier for carrier-shift indications.

Iron-Core I.F. Transformers

(Continued from page 23)

likely represents the amateur's preferred performance, the coupling in the iron-core unit can be readily changed to a lower value, and the selectivity of the transformer thereby increased at least 50 per cent while still maintaining a gain equivalent to the better air-core types. Two iron-core transformers used with 58 or 6D6 tubes and adjusted for minimum coupling would produce an intermediate-frequency amplifying system for an amateur receiver which would have adequate gain and greatly increased selectivity in a very compact assembly.

HIGHER FREQUENCIES

The development work on iron-core tuning systems up to the present has been concentrated largely in the intermediate-frequency spectrum, although work undertaken to date in the broadcast-frequency band indicates very promising application for iron-core units. For instance, with iron-core antenna coupling units gains in excess of 20 are obtainable through the broadcast band, representing about three times that obtained with air-core types. In interstage r.f. systems, gains of 150 have been obtained over the entire broadcast band, such gains being conservatively rated at twice that possible with air-core units.

Modulation of Screen Grid Tubes

This section covers techniques and circuits for modulating tubes with screen grids. These require additional attention in order to reach 100% RF modulation without distortion. There are many differing opinions on how to treat the screen and what circuits are best, but all of them seem to agree that it must be modulated along with the plate.

The most common approaches to having the screen voltage follow the modulating waveform, not all of them covered herein, are:

1. Additional purpose-designed winding on the modulation transformer.
2. "Self modulation" via a choke in series with the separate screen supply.
3. High wattage dropping resistor from the modulated plate voltage (often used with a clamp tube).
4. Clamp tube with audio fed to the control grid.
5. Separate transformer, driven through a resistance by the AC component of the modulated plate voltage.

There is ample literature on this topic in the handbooks and engineering texts.

Plate Modulation of Pentodes

Linearity—Operating Conditions—Modulator Requirements

By George Grammer*

THE ease with which pentode-type power tubes can be used for radiotelephony by introduction of the audio frequency in the suppressor grid circuit has more or less masked the fact that these tubes can be plate-modulated as well. A contributing factor has been the lack of definite information on pentode plate modulation —specifically, what to do with the second and third grids in the tube—although it is true the manufacturers have given a set of curves and operating conditions for the RK20.

If pentodes can be successfully plate-modulated —and they can—the chief point of interest, in comparing their performance with that of plate-modulated triodes, is whether or not the excitation requirements are still as low as with ordinary c.w. operation. To determine this, and also to find what were the optimum operating conditions for plate modulation, we set up an experimental amplifier rig in which various types of pentodes could be used. It was arranged so that the modulation could be applied to the screen and suppressor grids as well as the plate, so that combinations of plate and either one or both of the other elements readily could be tried. The resulting modulation characteristic was then checked on the oscilloscope so that the set of operating conditions giving optimum linearity could be determined by simple measurement.

It has been known for a long time, of course, that the only way successfully to plate-modulate a screen-grid type tube is to apply the audio frequency to both plate and screen. It seemed reasonable enough to believe that this would apply to pentodes as well, since the plate current is more sensitive to changes in screen voltage than in plate voltage. The tests confirmed this; skipping a detailed description of what was done, we can say that in general, modulation of the plate and screen in proper proportion will give a characteristic equally as good as that of a plate-modulated triode. Also, modulation of the suppressor, either with the plate or with both plate and screen, is not only unnecessary but at times undesirable. The suppressor may be operated either at zero voltage or a fixed positive voltage, depending upon the type of tube used. From the data obtained it seems necessary to differentiate between tube types in this respect. Operating conditions of the smaller tubes such as the 802 and RK23–25, differ somewhat from those obtaining for the RK20, RK28 and 803.

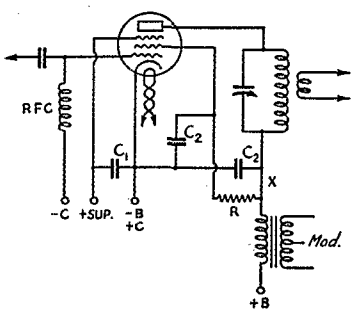

FIG. 1—PLATE AND SCREEN MODULATION CIRCUIT FOR USE WITH TUBES OF THE 802 AND RK23-25 TYPE

The screen dropping resistor must be on the tube side of the modulation transformer secondary winding. The by-pass condensers marked C_2 should be about .001 μfd., C_1 .002 μfd. or larger.

MODULATION OF SMALL PENTODES

A typical circuit diagram for plate and screen modulation of tubes of the 802–RK23–RK25 type is shown in Fig. 1. From an r.f. standpoint the circuit is the same as would be used for c.w. work; in the supply circuits, the screen voltage is obtained from the plate source through a dropping resistor, R. While a voltage divider could be used, it is not recommended since it would increase the load on the modulator and do no particular good so far as the modulation characteristic is concerned. The modulation transformer secondary is introduced in series with the common supply lead to the plate and screen, the screen dropping resistor being on the set side of the transformer secondary. Plate and screen by-pass condensers, C_2, should be of the order of 0.001 μfd.—large enough to provide a low-impedance path for the r.f., but still not so large as to affect the high-frequency audio response. The suppressor by-pass, C_1, should be 0.002 or larger, since the tube may have a tendency to oscillate if the suppressor is not thoroughly by-passed to the cathode, especially if the shielding is not complete.

An optimum value for the dropping resistor, R, is about 25,000 ohms. Using a plate-supply voltage of 600, the screen current under the operating conditions to be specified later will be of the order of 20 milliamperes, giving a drop of 500 volts and leaving 100 volts d.c. on the screen. Higher d.c. screen voltage does not seem to be of any particular value, actually causing a slight reduction in output, although leaving the modulation characteristic unaffected. The characteristic is likewise unchanged with lower screen

* Asst. Technical Editor.

voltage (i.e., a higher value of dropping resistor), but the output power again drops.

The optimum suppressor voltage depends to some extent on the excitation available. If the excitation is ample—"ample" in this case means much less than required by a triode of equivalent output—the suppressor can be operated at about 100 volts without affecting the linearity. The high suppressor voltage is advantageous from a power output standpoint. With low excitation the suppressor voltage should be reduced. With the suppressor at zero the tube can be modulated linearly with less than one milliampere control-grid current, control-grid bias being from a 22-volt battery. Power output under these conditions is of the order of ten watts. The excitation power is very small; the tube actually was driven by a 47 crystal oscillator with only 120 volts on the plate, the input to the oscillator being only about one watt. On the whole, the suppressor voltage does not have a very great effect; chiefly, it influences the linearity under certain critical excitation conditions. If the excitation is readily adjustable, the suppressor may be operated anywhere between 0 and 100 volts positive with good results, slightly more power output being obtained at the higher figure.

Control-grid bias is not critical. A 22-volt battery is entirely satisfactory for linear operation. More bias may be used, requiring a corresponding increase in excitation. It is not necessary to use a battery, however; a grid leak of about 2000 ohms will give equally good results. The rectified grid current either with the 2000-ohm leak or 22-volt battery will run between 10 and 20 milliamperes at optimum excitation. It is not critical in this region, but both too-low and too-high excitation will cause a departure from linearity. For this reason it is desirable that the excitation be readily adjustable, either by a coupling control such as a tap on the exciter tank, or by voltage control on the exciter.

A typical set of operating conditions for these tube types (all give identical performance) is as follows:

Plate voltage	600 d.c.
Plate current	50 ma.
Suppressor voltage	50–100 d.c.
Screen dropping resistor	25,000 ohms
Screen current	20 ma.
Grid voltage	−22 (or 2000-ohm leak)
Grid current	10–20 ma.
Power output	15–20 watts

The plate current should be adjusted, by means of antenna coupling, to 50 ma., approximately, the plate milliammeter being inserted at *X* on the diagram. The plate current should not change during modulation. If it kicks, either one of two things may be the case: the audio swing may be too great or the characteristic may not be linear. The remedy for the former is obvious, while the latter can be cleared up by adjustment of the excitation.

It is interesting to note that while all the tubes tried (several samples of each type) showed uniform characteristics when modulated on both plate and screen, one particular tube gave a linear characteristic when modulated on the plate alone, probably because of some individual peculiarity. This performance could not be duplicated in any of the other tubes.

THE RK20

The same series of tests run through on several RK20 tubes gave the same order of results, showing that optimum operation was obtained with combined plate and screen modulation. With the RK20, however, the suppressor is preferably operated at zero voltage. Using the circuit shown in Fig. 2, positive suppressor voltage has practically no effect on the output or linearity. In another type of circuit to be described later, positive suppressor voltage caused the characteristic to take a bad bend.

Using a 1000-volt plate supply (the manufacturer's rating for plate modulation is 900 volts) the optimum screen dropping resistor again was found to be in the neighborhood of 25,000 ohms. Under these conditions the screen current averaged 35 to 40 milliamperes, giving an effective d.c. screen voltage of about 200 volts. Somewhat lower than rated screen voltage seems to be the inevitable result of using a screen dropping resistor. However, the output is about the same as with fixed screen voltage for c.w. operation.

Control-grid bias and excitation are again not critical, although there is an optimum region. Fixed bias of 22 or 45 volts can be used, or the bias can be obtained from the flow of grid current through a leak of about 10,000 ohms. With proper excitation the grid current will be of the order of 5 to 10 milliamperes, the larger value with the lower bias voltage. The modulation characteristic is the same with either method of biasing. Either too much or too little excitation can cause a departure from linearity, the criterion being the steadiness of the plate current, in the absence of an oscilloscope. The excitation power required is of the order of one or two watts.

To compare the RK20 with a triode of equivalent rating, the set-up was changed slightly so that an RK31 could be used in its place as a neutralized triode. Although the power output from the two tubes was the same and the modulation characteristics were identical, the triode required considerably more excitation than the pentode. Expressed in amateur language, the RK20 could be excited fully with a 47 oscillator with about 300 volts on its plate; in fact, it was not necessary to load the oscillator to its full output. With the RK31, however, it was necessary to use 450 on the plate of the oscillator and to take out all the power it was capable of giving.

The oscillator inputs were about 6 watts and 18 watts, respectively.

Adjustment is much the same as with the smaller tubes. The antenna coupling is adjusted to make the plate draw about 80 milliamperes. A typical set of operating conditions is:

Plate voltage	1000 d.c.
Plate current	75 ma.
Suppressor voltage	0
Screen dropping resistor	25,000 ohms
Screen current	35 ma.
Grid voltage	−22 to −45 (or 10,000-ohm leak)
Grid current	5 to 10 ma.
Power output	50 watts (app.)

There should be no change in plate current with modulation. The screen current likewise should be steady.

HIGH-POWER TUBES

The high-power tubes, the RK28 and 803, are capable of being operated satisfactorily under similar conditions. Ratings have been placed on the RK28 only for 1500 volts plate, although we have used the tubes at 2000 volts without running into difficulties. However, for the same d.c. input, plate modulated service is harder on the tube than c.w., so it may be that the life would be adversely affected to some extent when operated at full plate voltage. The 803 has not carried recommendations for this type of work, but the tube operates well. A typical set of operating conditions for the two tubes at 1500 and 2000 volts is given below:

Plate voltage	1500	2000 d.c.
Plate current	110	150 ma.
Suppressor voltage	45	45 volts
Screen dropping resistor		40,000 ohms
Screen current	35	45 ma.
Grid voltage	−90	−90 (or 20,000-ohm leak)
Grid current		10 to 15 ma.
Power output	125	200 watts (app.)

The figures given above are subject to slight variation with the two types. The 803 takes slightly higher grid current than the RK28 for the same power output and linearity. The screen currents also may vary somewhat, although they will be in the region specified. Again the plate current should be constant with modulation.

MODULATOR REQUIREMENTS

Since both screen and plate must be modulated, it is obvious that some of the audio output of the modulator will be consumed in the screen circuit, where it is "wasted" in the sense that no r.f. output results therefrom, although it is vitally necessary to give linear performance. In pentode transmitting tubes the screen current usually has a value from one-third to one-half that of the plate current, although the screen voltage of course is much lower than the plate voltage. However, when screen power is taken from the plate supply, a considerable amount of power, both d.c. and audio, is consumed in the dropping resistor. The total power, both d.c. and audio, consumed in the screen circuit may be as much as half the plate input.

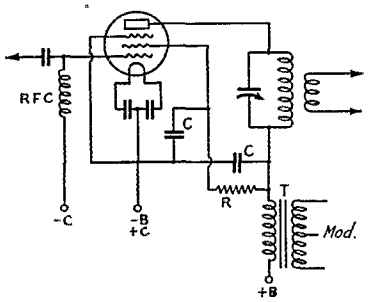

FIG. 2—A TYPICAL CIRCUIT FOR FILAMENT-TYPE PENTODES SUCH AS THE RK20, 803 AND RK28

Screen and plate by-passes should be about .001 μfd. The value of the screen dropping resistor, R, is discussed in the text.

In the circuits of Figs. 1 and 2, therefore, the d.c. power consumed in the plate and screen circuits is the terminal voltage of the plate supply multiplied by the sum of the plate and screen currents. In the case of an RK20, for instance, these currents will be 75 and 35 ma., respectively, at 1000 volts. The d.c. input is therefore 110 watts. Of this power, 75 watts is the d.c. input to the plate, 35 watts the input to the screen circuit. The screen itself takes about 7 watts, the other 28 being used up in the dropping resistor. The audio power supplied by the modulator divides in the same proportions. The modulator must supply audio power, on a pure-tone basis, of 55 watts, half the total input, although only 37.5 watts is taken by the plate and 3.5 watts by the screen itself. The other 14 watts is dissipated in the dropping resistor.

Using the operating conditions previously specified, the audio power required to plate-screen modulate a single 802 or RK23-25 would be 21 watts, since the plate and screen circuit inputs would be 600 volts multiplied by 50 plus 20 milliamperes, or 42 watts. This is on a pure-tone basis. A pair of 46 tubes would be capable of doing the job satisfactorily. The equivalent load impedance of the r.f. tube would be 600/.07, or 8560 ohms. Since the optimum load impedance for the Type 46 at this order of power output is about 5800 ohms plate to plate, the primary-to-secondary impedance ratio of the output transformer should be 5800/8560 ohms, or 0.677 to 1. This corresponds to a turns ratio, total primary to secondary, of 0.823 to 1. The modulator tubes can be operated at 400 volts. On the speech basis discussed in August *QST*, the same pair of tubes, operated at 500 volts as described,[1] could be used to modulate two of the small pentodes in parallel or push-pull.

For the RK20, a modulator consisting of a pair of graphite-plate Type 10's operated at 600 volts would be required, since the modulator has to supply 55 watts. The load impedance is 9000 ohms, approximately, and the plate-to-plate

[1] "Greater Economy in Class-B Modulator Design for Speech," *QST*, August, 1935.

load on the modulator should be 8000 ohms. The impedance ratio is therefore 8000/9000, or 0.89 to 1, total primary to secondary, calling for an output transformer having a primary-to-secondary turns ratio of 0.943 to 1. This is again on a pure tone basis. Two RK20's would require a modulator having an output of somewhat over 100 watts. Several types of tubes, such as the 800, RK18, RK31, and 830-B, are capable of outputs of this order. The output transformer ratio can readily be calculated as above, using the rated load impedance for the particular type of modulator tube chosen. The load represented by the pentodes will of course be just half that of one tube alone, or 4500 ohms.

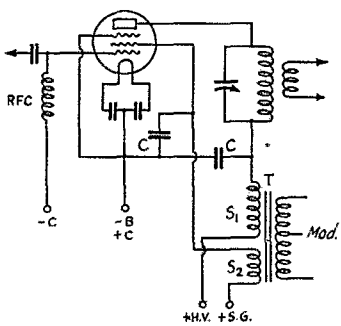

FIG. 3—MODULATION OF PLATE AND SCREEN THROUGH A SPECIAL OUTPUT TRANSFORMER HAVING AN AUXILIARY WINDING

A considerable saving in both d.c. and audio power results from the use of this type of transformer, since the power loss in the screen dropping resistor is eliminated.

In the case of the higher power pentodes, the RK28 and 803, the audio power required will depend upon the operating plate voltage. On the 1500-volt, 110-ma. basis, the screen should take about 35 ma., making the total d.c. input approximately 220 watts. The pure-tone audio power required is therefore 110 watts. A pair of RK31's, 830-B's, or 100-watt type tubes can easily supply the power.

With 2000 volts on the plate, the plate and screen currents total 195 ma. representing a total d.c. input of 390 watts. A pair of 838 tubes will modulate this input nicely. Ordinary output transformers designed to work into a 10,000 ohm load from 203-A or 838 tubes will be close enough in turns ratio to work with entire satisfaction.

CONSERVING AUDIO POWER

From the foregoing it is apparent that a good deal of audio power must be used up in the screen dropping resistor. This is pure waste, since the only function of the resistor is to keep the screen voltage near the proper operating value. At least four-fifths and possibly more of both d.c. and audio power supplied the screen circuit is lost in the dropping resistor and not in the screen itself. The power lost in the screen grid is fairly low even in the high-power tubes.

The logical step to take in eliminating the waste of power is to get rid of the dropping resistor. This can be done quite readily by supplying the d.c. screen power from a low-voltage supply—from the oscillator or a buffer power pack, for instance—and introducing the audio frequency in the screen circuit through the medium of a second output winding on the modulation transformer. Since the audio power taken by the screen grid is only about 10% that taken by the plate, the extra drain on the modulator tubes should not affect their operation very greatly, even if the screen winding is ignored in computing the load on the audio tubes.

To try out this method of swinging the plate and screen of a pentode, the coöperation of the Thorarson Electric Mfg. Co. was secured in making up a transformer having two output windings, multi-tapped to fit various types of pentodes and Class-B tubes. A typical circuit diagram using this type of transformer is shown in Fig. 3. It is necessary, of course, that the two output windings be poled correctly so that the voltage increases on plate and screen simultaneously. Tests have shown that the modulation characteristic with this type of coupling is equally as linear as with the dropping resistor. A considerable saving in the d.c. and audio power results from its use—to say nothing of the elimination of a "high-powered" dropping resistor. A quite husky resistor is required to drop the voltage for even the smaller pentodes, while a power-dissipating capacity of about 100 watts is required for the RK28 and 803 at full plate voltage.

The number of turns on the screen winding of the transformer should bear the same relation to the turns on the plate winding that the d.c. screen voltage bears to the d.c. plate voltage. In other words, if the d.c. plate voltage is 1000 and the screen voltage 200, the screen winding should have 20% as many turns as the plate winding. This is a maximum figure; it should not be exceeded since a larger number of turns would cause the screen voltage to be zero over a portion of the cycle on the down-swing instead of reaching zero only for an instant. If the relation is exact, the screen voltage will swing to twice its d.c. value at the same instant the plate voltage swings to twice *its* steady value. However, it does not seem to be necessary to swing the screen over as wide a range as the plate, relatively speaking. Screen modulation to the extent of 75% seems to be ample. This simply means that the audio swing on the screen is not at all critical, so it should be possible to build a transformer having slightly less than the maximum usable number of turns and thereby have a unit which will fit a number of different operating conditions. With less than complete modulation of the screen, also, the audio power used in the screen will be reduced, further lightening the load on the modulator.

(Continued on page 33)

frequency gets a kick at the points marked "X." From a 120-meter crystal a controlled frequency of 180, 160, 90 or 80 meters can be obtained as well as the harmonics and sub-harmonics. By

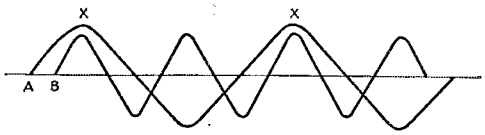

FIG. 2

replacing the r.f. choke in the screen grid of the frequency lock with a tuned circuit which resonates with the controlling frequency, the output is increased slightly.

FURTHER POSSIBILITIES

Two or more of these frequency locks could be used in cascade to get a much higher harmonic or sub-harmonic; for example, possibly 80 meters to 5 meters, with two tubes. Five-meter output to

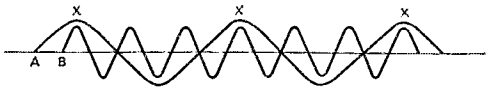

FIG. 3

excite a 5-meter amplifier should be easily obtainable, from a 40-meter crystal Tri-tet oscillator with a 20-meter output, by letting the frequency lock operate on the fourth harmonic, or 5 meters. (How does this sound to the 5-meter gang?) With proper tuning condensers, the frequency lock is not at all critical to tune.

With some indicator to show the action, such as a pilot lamp with one or two turns of wire placed near the coil of the frequency lock or a milliammeter in the grid of the amplifier, a great increase in output will be noticed when the frequency is tuned through a harmonic or sub-harmonic. It may be well to mention here that if too great a load is placed on the frequency lock it may refuse to oscillate, especially when operat-

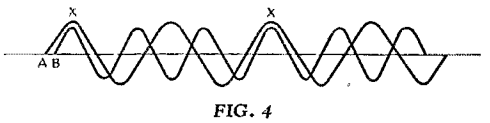

FIG. 4

ing above the third harmonic or sub-harmonic with no positive voltage on the screen grid. This will not occur if there is some positive voltage on the screen grid.

When the frequency lock is driving an amplifier there is no danger of the amplifier drawing too much plate current from lack of excitation when the screen grid of the frequency lock has a positive voltage applied to it, as the frequency lock is always exciting the grid of the amplifier at some radio-frequency. Care should be taken, however, to prevent radiation when the frequency lock is not locked to the desired frequency.

The coupling condenser should be of less capacity if the output frequency has a tendency to upset the oscillator. The ideal coupling circuit would consist of a choke or impedance from the screen grid to cathode which has high impedance to the control oscillator frequency and low impedance to the frequency of the frequency lock. Thus the screen grid will be at or near the r.f. ground potential of the frequency lock.

The 47 and 59 type tubes have also been tried, but very little difference was noticed, so the 46

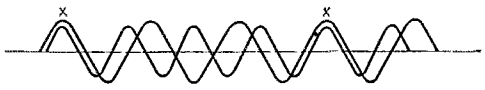

FIG. 5

type was used. It is a simpler tube to use and will stand a fairly high voltage on the plate.

This circuit has been used at frequencies from 15 kc. to 30,000 kc. and it worked well throughout this range. However, it seems that the system is not limited to this range. The 46 type of tube may easily be adapted to the 5-meter range, but it has not been tried at the time of this writing.

The values of the component parts of Fig. 1 depend, of course, upon the range of frequencies at which it is desired the system should work.

Plate Modulation of Pentodes

(Continued from page 16)

With a transformer of this type the chief disadvantage of pentode plate modulation, the extra power capacity required of the modulator with the screen dropping-resistor method, is overcome to the extent that the audio power taken by the screen circuit can safely be neglected. From this standpoint the pentodes are placed on a competitive basis with triodes. The ease with which the pentodes can be excited gives these tubes a very definite advantage over triodes. Plate efficiencies compare favorably with those obtainable from three-element tubes as ordinarily operated in modulated service. It is expected that suitable output transformers will be made available in the near future. All in all, it appears that even in the plate-modulated field, long held almost exclusively by three-electrode tubes, the pentodes have something definite to offer.

Mike Preamplifiers, Limiters, Compressors, and Clippers

This section contains articles with proven circuits for compressing, limiting, and clipping speech. Each of these actions is important and ought to be dealt with separately in a professional-quality amateur AM station. There is much confusion over these terms, yet those wanting a fully modulated signal with high intelligibility, a natural sound, and no overmodulation will find these interesting.

Compressor:

Adjusts the overall signal level to a narrow range based on the average level. Some of them are a bit slow and miss the first half cycle or first few hundred microseconds of an excessive signal, but after that time has passed they have reduced the gain based on the peak amplitude and keep the gain set there for some time, 200-2000ms, gradually 'releasing' the gain upwards until the next offending peak. Maintains a fairly constant level of the audio amplitude envelope over time within a very few dB of a target setting.

Limiter:

Quickly reduces gain to prevent most of the initial peak from passing through. The 'attack time' should be very fast, such as 100us. Release may be 100-200ms, or longer as to preference. Acts to reduce the gain on individual half cycles of difficult sounds such as vowel attacks. Acts on individual parts of sounds rather than whole syllables or words like the compressor.

Some people use just one of the above, and there is no problem with that, but a clipper should always be used in a conventional +/-100% AM set.

Clipper:

The final gatekeeper between other audio processing equipment and the transmitter, it should act as a pair of oppositely polarized diodes to absolutely clip the audio waveform at a point where just under 100% negative modulation is achieved. It generally should include a low pass filter to eliminate the high frequency harmonics created by the very fast clipping action. Without a low pass filter, a random audio peak being clipped would produce harmonics extending many KC from the carrier, much to the annoyance of others using the band. A low pass filter is important in a high quality station whether a clipper is used or not, because a properly designed modulator has enough bandwidth to amplify signals outside the chosen voice spectrum.

For those seeking a natural yet fully modulated voice signal, use a compressor to adjust the average level and eliminate variations caused by microphone distance, then use a limiter to control the high peaks that occupy about 5-15% of the time within many vowel sounds. The transmitter is modulated with this level. The clipper is then used to catch the very occasional excursion. Ideally, the clipper never conducts when all three pieces are used. In practice, it'll stay a little busy.

For those wanting a signal that may not reflect their own tone but clearly punch through interference best, a clipper alone can be used. Intelligibility can be had with up to 20 or 30dB of clipping followed by a stout LPF.

Why not use all three and add a switch to accommodate different conditions?

If this makes no sense, the reader is referred to the use of an oscilloscope to observe his voice waveforms. One has only to say one's vowels and one will see.

An Improved Speech Preamplifier

Details of a Flexible, High-Fidelity Unit

By Cyrus H. Fraser,* W8BBK

THIS article describes an improved preamplifier circuit in which the cost of construction has been reduced by the use of a resistance network used to connect the double button carbon microphone to the amplifier circuit thus eliminating the input transformer, and also shows a plate circuit having two tuned networks designed to increase the amplification at the high and the low frequencies. This type of amplifier may be used to compensate for the deficiency of the dynamic speaker at the high and low frequencies, as in public address systems, or it may be used to compensate for the falling off of the high and low frequencies in the later stages of the transformer-coupled power amplifier or modulator.

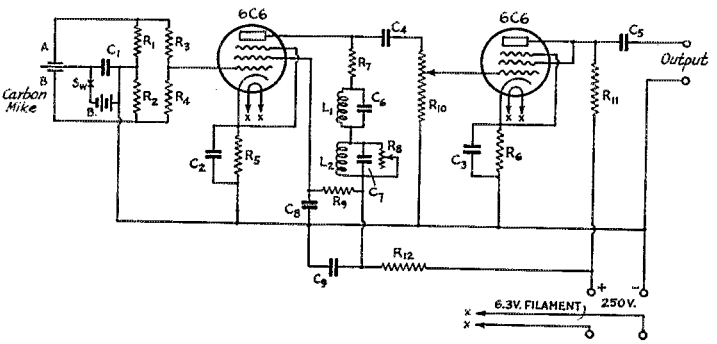

FIG. 1

L1—¼ henry.
L2—200 henrys.
C1—0.1 μfd.
C2, C3—2 μfd., 25 volts.
C4—0.25 μfd.
C5—0.1 μfd.
C6—.0005 μfd.
C7—.035 μfd.
C8—0.1 μfd.
C9—8 μfd.
R1, R2—200 ohms.
R3, R4—15,000 ohms.
R5, R6—1000 ohms.
R7—30,000 ohms.
R8—500,000 ohms.
R9—300,000 ohms.
R10—500,000 ohms.
R11—100,000 ohms.
R12—10,000 ohms.
B—6 volts or more depending on microphone.

In the original preamplifier with conventional input transformer, considerable hum was encountered and it was discovered that after all hum was eliminated in the plate supply there was still an annoying amount originating in the input transformer and in the leads to the volume control which had been placed on the secondary side of the input transformer. By changing the volume control to the grid circuit of the second preamplifier tube, as shown, and by using a resistance network instead of the input transformer, all noticeable hum was eliminated and the frequency response of the amplifier was improved. With this input arrangement it may be necessary to use more than six volts of microphone battery to obtain normal microphone current, depending upon the type of double-button microphone used.

Briefly, from Fig. 1, the theory of the input circuit is as follows: As the diaphragm swings in direction A by the action of a sound wave the carbon granules are compressed on this side causing a decrease in resistance and an increase in current in side A, the current in side B decreasing at the same instant by a decrease in the pressure on the granules on this side. If the microphone is balanced, the current in side A will equal the current in side B. The voltage at any instant impressed on the grid of the first amplifier tube will be the *IR* drop across *R1* equaling the voltage across *R2*, *R3* and *R4*. If the microphone is not balanced, the wave form will be distorted by unequal voltage drops across *R3* and *R4*. This input circuit has less gain than one with an input transformer. If necessary this may be remedied by adding one more stage of resistance-coupled amplification to the succeeding circuit usually used with the preamplifier. This additional stage will be found cheaper than a high-grade input transformer, will have less loss at high and low frequencies, will take up less space than a high-grade input transformer which is necessarily large, and the additional stage is lighter and does not increase the hum level to any noticeable extent.

There has been some controversy regarding the advisability of increasing the amplitude of the higher audio frequencies on radiotelephone transmitters due to side band interference, but it is now generally conceded that when the station is used for voice only the amplitude of the higher frequencies of the voice is so small that no interference is noticeable. It is these higher frequencies or harmonics that make the speaker sound natural.

The plate circuit described here is composed of two tuned circuits resonant at 60 and 14,000 cycles. At the resonant frequency the impedance of the plate circuit is increased and consequently

* 48 Glenwood Avenue, Buffalo, N. Y.

the overall amplification of the amplifier is increased. It can be seen that as the tube plate resistance increases, the amplification of the tube increases. In the case of resistance-coupled amplifiers one might wonder why we do not increase the plate load resistance indefinitely, to the end that the voltage amplification would equal the amplification factor of the tube. But if the plate resistance is increased to a large value we have an unstable plate circuit and the drop in voltage through the resistance becomes so great that an increased plate supply voltage is necessary to make up for the additional drop in the plate load resistance. We can increase the applied plate voltage but this increases the size and expense of the power supply with not enough increase in voltage amplification to warrant it.

The direct current resistance of the 200-henry choke should not be higher than 3000 ohms, and the ¼-henry choke should not be over 400 ohms for efficient results. The lower the resistance the more gain will be obtained at the resonant frequencies; but if too low a resistance is used the amplification will be peaked at these two frequencies only, and the overall curve for the amplifier will be undesirable. At any other frequency than the resonant frequencies the plate load impedance will be lower and therefore the amplification will be lower. By using a 30,000-ohm resistance in series with the resonant circuits the amplification on frequencies between 60 and 14,000 is maintained at a slightly lower value than the amplifi-

(Continued on page 68)

High Voltage from 32 Volts D.C.

By Wilbur J. Tabor,* W9KUI

HAMS without access to commercial power but having 32 volts d.c. available will be interested in the power supply used at W9KUI. The set-up described is the result of a couple years spent experimenting on various types of power supplies for 32-volt systems. Among others, a home-grown motor-generator was tried, but its efficiency was terrible.

The supply used now is relatively efficient, easy to build and is entirely satisfactory. It supplies 35 watts to a pair of 45's with 375 volts at 95 mils. This supply consistently brings better QRI reports to the same transmitter than my previous supply which had 24 mikes and 3 chokes. In 31 contacts on 80-meter c.w., not counting two contacts made with the choke shorted out, tone has been reported as T8 once, at all other times T9, sixteen of which were T9X.

The lay-out consists mainly of an altered Stancor ten-tube transformer P949, having a 110-volt primary, 700-volt 120-ma. center-tapped secondary, 6.3-volt secondary and a 5-volt secondary. The idea is to change the 110-volt primary to adapt it to 32 volts. The fiber mount carrying the soldering lugs is removed, also the half shell. Without removing the laminations, cut the wire in the two low-voltage secondaries and remove them, being careful not to damage the 110-volt primary which is underneath. Remove three layers of the primary and about 10 turns of the fourth. Remove a little of the insulation under these ten turns exposing the fifth layer. This gives you three taps on your primary, one at the end of the coil, another at edge of the fourth layer where wire goes to fifth layer, and the third tap is where the fifth layer was uncovered by removing those ten turns. Experiment to find which tap works best. Using too few turns in the primary causes excessive sparking at the vibrator points. I use the middle tap. This primary is put in series with a Ford coil. The high-voltage terminal of the coil is not used. The success of this supply depends largely on the buzzer adjustments. Put a toothpick under the brass reed of the stationary contact. Connect your transmitter to the set-up for a load. A high-range voltmeter or other means of noting results is necessary. With the buzzer running, voltage will probably be about 150. Now, take another toothpick, place it between the core and the vibrating reed and gently push the reed toward the stationary contact. The voltage will rise sharply. This second toothpick is only temporary, to show what results may be expected. To make the permanent spacer, cut strips of thin QSLs (about 1 inch by 1½-inches and place them between core ending and vibrator. The idea is to dampen the vibrations so as to increase the period of time that current flows during each cycle. I use two strips and get a fine

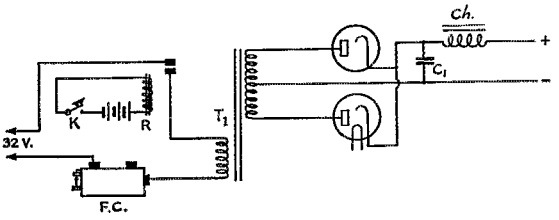

FIG. 1—COMPONENTS ARE DESCRIBED IN THE TEXT

* Spring Valley, Minn.



Be Wise

Cornell-Dubilier, long the leader in the condenser industry, brings now to the 'HAM' the TF line of Dykanol filter capacitors.

High fidelity amplifier, transceiver and transmitter operation demands condensers of the finest electrical characteristics.

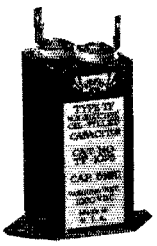

Minimum power factor — extremely high insulation resistance — constant non-inductive capacity — stable electrical characteristics under abnormal temperature and humidity conditions. These are only a few of the salient intrinsic features of the TF series.

Catalog No. 127-A contains a full description. A copy is yours for the asking.

CORNELL-DUBILIER
CORPORATION
4373 BRONX BOULEVARD
NEW YORK

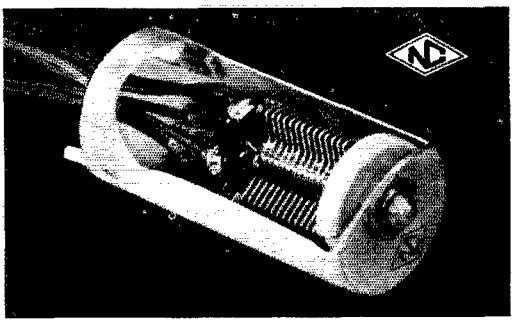

TWIN DIODE TRANSFORMER

■ NATIONAL announces a new I.F. transformer designed for operating into a diode detector. Though of the same high quality as National interstage I.F. transformers, it differs from them principally in having a closely-coupled, untuned, push-pull secondary, and is particularly suitable for use in noise suppression circuits as well as in detector and AVC circuits. Type IFD 175 or 450 to 550 k.c.

List Price..... **$3.50**

USUAL AMATEUR DISCOUNTS APPLY

NATIONAL COMPANY, INC.
MALDEN, MASS.

N. Y. C. & Long Island (Continued)

W2BGO	486	6	2
W2HAY	216	9	2
W2ING	162	2	2
W2EYG	27	1	1

Northern New Jersey

W2GUM	3,015	23	5
W2GON	2,673	22	3
W2BWW	1,944	18	3
W2GQX	1,647	21	3
W2HXI	1,296	16	2
W2CW	1,116	13	4
W2CJX	936	6	6
W2GVZ	270	5	2
W2CPJ	216	4	2

Iowa

W9DIB	648	8	3

Missouri

W9RSO	7,182	42	7
W9GBJ	6,489	35	7
W9NNZ	4,725	25	7
W9RJP	4,617	21	6
W9KEI	3,402	21	6
W9RGR	2,835	23	5
W9UAZ	2,070	16	5

Nebraska

W9DMY	2,970	19	6
W9KJP	621	8	3
W9TBD	468	6	3

Connecticut

W1FRK	6,318	30	5
W1TS	3,825	29	6
W1GME	558	11	2
W1GKM	432	8	2

Maine

W1IQZ	6,993	26	7
W1GKJ	1,935	15	5

Eastern Massachusetts

W1ABG	2,430	20	3
W1ESI	2,065	17	3
W1IDU	1,260	13	4

Western Massachusetts

W1DLD	2,880	23	5
W1HOZ	756	12	3
W1AJ	108	2	2

New Hampshire

W1BFT	15,120	80	7
W1ILA	486	6	3
W1IZL	90	4	2

Rhode Island

W1BBN	5,796	32	7
W1BLV	2,430	20	3
W1IMY	1,038	13	2

Vermont

W1EZ	11,655	63	7
W1AXN	432	8	2
W1GNF	143	3	2

Montana

W7EUO	41	1	1
W7EXM	27	1	1

Washington

W7ECX	2,309	23	3
W7EYD	1,080	18	3
W7TZ	81	3	1
W7BHW	27	1	1

Santa Clara Valley

W6DQH	81	2	1

East Bay

W6IGA	848	6	3
W6LMZ	405	5	3

San Francisco

W6CIS	2,961	17	7
W6JMR	324	4	3
W6JHA	54	2	1

Sacramento

W6MZH	41	1	1

San Joaquin

W6MVK	324	4	3

San Diego

W6GTM	5,508	34	6
W6EPZ	2,538	19	6

Colorado

W9DQD	108	2	2

Utah

W6FRN	2,808	18	6

Alabama

W4AG	6,048	32	7
W4CJG	3,132	22	6
W4APU	944	10	4
W4BJA	162	4	1

Los Angeles

W6KRI	9,639	51	7
W6GAL	8,505	47	7
W6EXQ	8,505	47	7
W6CEM	3,591	21	7
W6ACL	2,646	17	6
W6CPG	27	1	1

Northern Texas

W5CPT	1,080	6	5
W5CPB	810	6	5

Oklahoma

W5DQB	27	2	1

Southern Texas

W5EEX	1,350	9	4
W5ARO	1,170	10	5
W5BKE	756	7	4
W5BDI	648	8	3
W5DMB	81	3	1

An Improved Speech Preamplifier

(Continued from page 21)

cation curve is given in Fig. 2 as a function of the deviation from the 1000-cycle gain in decibels.

Where the preamplifier is three or four feet away from the filament and plate voltage trans-

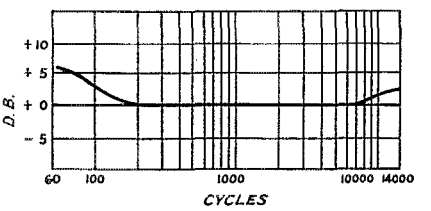

FIG. 2

former, which is advisable because of hum pickup, it is an advantage to use the 6-volt type tube (6C) due to the lower drop in voltage in the filament supply cable because of the lower filament current taken by these tubes.

Condenser *C9* and resistance *R12* act as a filter,

EIMAC
TRANSMITTING TUBES

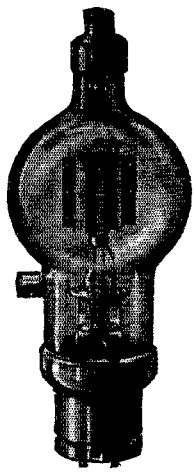

EIMAC 150T

WHEN YOU THINK OF DX—REMEMBER AT ANY PLATE VOLTAGE AND AT ANY FREQUENCY EIMAC TUBES DO A BETTER JOB!

Now available with following plate dissipation ratings

75 WATT
150 WATT
300 WATT
500 WATT

EITEL-McCULLOUGH, INC.
SAN BRUNO, CALIF., U. S. A.
Cable "EIMAC"

RADIO COURSES
RADIO OPERATING: Prepare for Gov't License Exam. ● RADIO SERVICING: Including Short Wave ● AMATEUR CODE ● New Course in ELECTRONICS.
Day and Evening classes—*Booklet upon Request*
NEW YORK YMCA SCHOOLS
4 West 63rd Street, New York City

Get Your NEW
MARTIN VIBROPLEX
JUNIOR NOW!
ONLY
$10

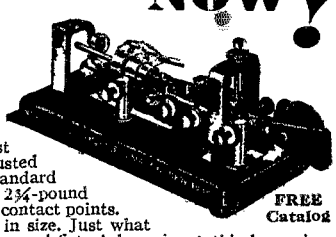

FREE Catalog

The BUG that satisfies the world's finest operators—can be trusted to satisfy you. All Standard Vibroplex features. 2¾-pound japanned base. Heavy contact points. The only difference is in size. Just what you need to develop a good fist. A bargain at this low price.

OTHER VIBROPLEX MODELS
Famous Improved Vibroplex, Black or Colored, $17; Nickel-Plated, $19. Newest Model Vibroplex, No. 6, Black or Colored, $17; Nickel-Plated, $19.
Remit by money order or registered mail

THE VIBROPLEX CO., INC.
832 Broadway New York, N. Y.

in addition to that in the plate voltage power supply, to reduce hum in the plate voltage power supply to the first tube. Further increase in gain on the higher frequencies may be obtained in the succeeding power amplifier stages if used, by placing a condenser across the secondary of one of the interstage transformers. As the size of these condensers depends upon the design of the transformer, no definite values can be given although they generally are in the neighborhood of 500 to 750 $\mu\mu$fd. if the transformer is designed for Class-A amplification. For a single secondary, one condenser is used, and two in series of the same value with their midpoint grounded, if the transformer has push-pull secondaries.

Two 100-henry chokes of standard make were used in the author's amplifier. The amount of bass can be reduced by varying the amount of resistance in the variable resistance across *L2 C7*. The amount bass desirable in the amplifier will depend upon the type of equipment with which it is used. For example, if used with a public-address system which has the large type dynamic speakers which in themselves favor the low frequencies, it might be advisable to omit circuit *R8*, *L2*, *C7* and replace it with an additional 25,000-ohm resistor.

Strays

W2HFO tells of the ham who absent-mindedly wrote "hrs mi crd, where's urs?" on all the Christmas greeting cards he sent out!

Another coincidence: W6CAL, moving to the East Coast, was assigned the call W1JPE. His first W contact, made on a "CQ SF," was with a San Francisco station, W6JPE!

New Receiving Tubes

(Continued from page 29)

fairly high voltage-amplification and at the same time permit transformer coupling to the following audio power stage. It is capable of an audio output of approximately one-fourth watt and is therefore suitable for driving triode power amplifiers taking appreciable grid power. It is especially suitable for use in high-fidelity receivers.

Tentative characteristics of the 6R7 are as follows:

Heater voltage	6.3 volts
Heater current	0.3 amp.
Plate voltage	250 volts
Grid voltage	−9 volts
Amplification factor	16
Plate resistance	3500 ohms
Mutual conductance	1900 micromhos
Plate current	9.5 ma.

The tube has the usual octal base with 7 pins and top cap. Pin connections are as follows (see 1936 A.R.R.L. *Handbook* for numbering system): 1, shell; 2, heater; 3, triode plate; 4, diode plate; 5, diode plate; 7, heater; 8, cathode; cap, grid.

RCA-Radiotron also announces two new glass types, the 1A4 and 1B4, both screen-grid tetrodes for battery receivers. The 1A4 is of the variable-μ

Resistance-Coupled Input for Carbon Microphones

By Orville J. Sather*

IT IS sometimes desirable to use resistance coupling in a microphone circuit and amplifier, especially where high fidelity is desirable and high gain is not so important. In a transformer-coupled circuit there is a gain due to the step-up ratio between primary and secondary windings, while this gain is sacrificed in resistance-coupled amplifiers. However, resistors and condensers are cheaper than transformers, particularly when the transformers are designed to give a good frequency response; also, with the advent of high-mu tubes of all types, voltage gain from transformers is not so important. Present-day trends are to use resistance coupling in small amplifiers when high fidelity is desired.

In the diagrams shown, resistance coupling is used on the output of the double button carbon microphone, the signal voltage being applied across R_1 from grid to cathode of the first tube. The principle of operation is as follows: Suppose a direct current of 10 mils is flowing in each button of the microphone, and through R_1 from a to b and from c to b. This will develop a voltage from a to b and from c to b of 0.010×200 or 2 volts. Since a and c are then at the same potential with respect to the center, there is no potential difference between them. Then suppose an instantaneous pressure is applied to the diaphragm of the microphone in such a direction that the resistance is decreased in the upper button and is increased in the lower button. The current will then momentarily increase from a to b (to 11 mils), and will decrease from c to b (to 9 mils). The voltage drop from a to b will then be 0.011×200 or 2.2 volts, and the voltage drop from c to b will be 0.009×200 or 1.8 volts. There will then be an instantaneous potential difference of 2.2−1.8 or 0.4 volts between a and c, or a signal of approximately 0.4 volts will be applied to the grid of the first tube.

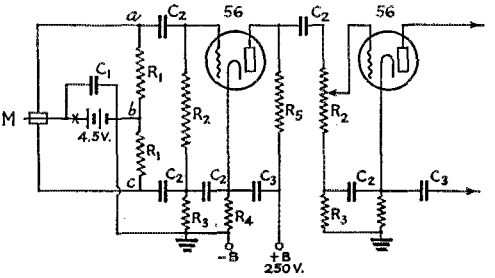

FIG. 3—HIGH-GAIN PENTODE INPUT

C_1—*1-μfd.*
C_2—*2-μfd. (paper).*
C_3—*2-μfd. 400-v.*
C_4—*1-μfd.*
C_5—*1-μfd. 400-v. (paper).*
R_1—*200-ohm.*
R_2—*250,000-ohm.*
R_3—*100,000-ohm.*
R_4—*3500-ohm.*
R_5—*200,000-ohm.*
R_6—*50,000-ohm.*
R_7—*500,000-ohm potentiometer for following a.f. tube.*

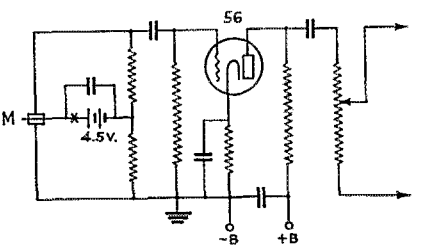

FIG. 2—SIMPLE TRIODE INPUT STAGE
C—5-μfd. 50-v.
Other values same as for Fig. 1.

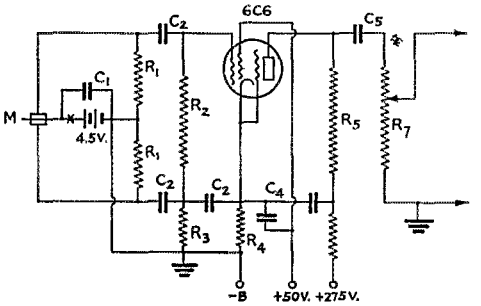

FIG. 1—TRIODE INPUT STAGE WITH BIAS FILTER

C_1—*1-μfd.*
C_2—*0.2-μfd. (paper).*
C_3—*2-μfd. 400-v.*
R_1—*200-ohm.*
R_2—*500,000-ohm.*
R_3—*200,000-ohm.*
R_4—*2800-ohm.*
R_5—*50,000-ohm.*

The circuits shown are designed for a W.E. 600-A microphone having an impedance of 200 ohms per button. If other microphones are used having a different load impedance, R_1 should be changed accordingly. A single-button microphone will work just as well; in this case the center tap on R_1 would be omitted and the microphone would be connected at points a and c. In Fig. 2 the microphone is grounded through the 200-ohm resistor in parallel with one button of the microphone. The signal voltage measured from a to c was approximately from 0.04 to 0.05 volts, or about − 35 db. This output voltage is still considerably above the level of other types of microphones.

The amplifier circuit shown in Fig. 1 was

* WCCO, Northwestern Broadcasting Inc., Minneapolis, Minn.

thoroughly tested and the response was exceptionally good, the voltage gain being approximately 140. The output may be used to drive a pair of 45's in Class B by means of transformer coupling. Fig. 2 is merely a modification of Fig. 1. Fig. 3 shows the use of a high-gain stage employing a pentode tube. The stage has a voltage gain of approximately 100, so the output is equivalent to that of a stage using transformer coupling into an ordinary triode. Fig. 4 shows the use of a high-gain push-pull amplifier using two 53 tubes. The response of this amplifier is practically flat for all frequencies in the audio range (flat within ½ db from 30 to 10,000 cycles). It has an overall gain of 55 db or a voltage amplification of approximately 550. (This test was made using input from a crystal microphone having an output level of approximately −68 db.) These tests were made in the communication laboratories at the University of Minnesota. The circuit was designed by Ralph E. Allison. It makes a very nice pre-amplifier for use with any type of microphone or low-level audio source.

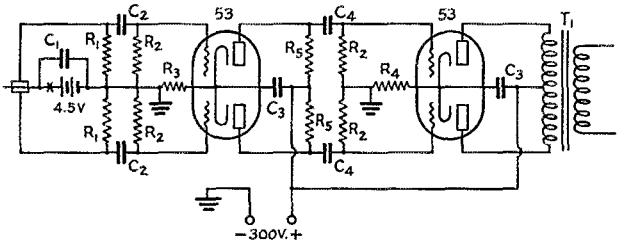

FIG. 4—HIGH-GAIN PUSH-PULL AMPLIFIER

C1—1-μfd.
C2—0.1-μfd. (paper).
C3—2-μfd. 400-v.
C4—0.2-μfd. 400-v. (paper).
R1—200-ohm.
R2—2.5-megohm.
R3—3000-ohm biasing resistor.
R4—900-ohm biasing resistor.
R5—250,000-ohm.
T1—High-impedance coupling transformer.

In any of the amplifiers shown it is quite simple to use any other audio source of low impedance by substituting it for the microphone across R_1; or, in case of high impedance, across R_2. It is advisable to use the volume control after the first or following stages rather than before the first stage in order to prevent amplification of noise picked up in the potentiometer leads or the potentiometer itself.

Another 1936 A.R.R.L. Field Day—August 22nd–23rd

IN RESPONSE to persistent demand for another opportunity to test portables, combining outdoor radio work with an outing before the colleges open in September, A.A.R.L. announces a second 1936 Field Day.

Starting Saturday, August 22nd (4 p.m. local time) and ending Sunday, August 23rd (7 p.m. local time), U. S. A. and Canadian operators are invited *to enter portables* in another F.D. The rules will correspond exactly to those detailed on page 22 of June 1936 *QST*, to which please refer. Each different station contacted counts *one point*. Points may be multiplied by 2 if either transmitter or receiver is independent of commercial power mains, by 3 if both are supplied from an independent local-power source. Power multipliers of 3, 2, or 1 also apply, if the plate power input to the final is not more than 20, or 60 watts, or over 60 watts, respectively.

Polish up the portable gear now. Complete the outfit you planned to modify after the June A.R.R.L. Field Day tests. Give it a thorough test August 22nd and 23rd. Send us a postal card or letter listing the stations worked and your score. "Manufactured" contacts between the field groups' transmitter and spares of other operators belonging to the same gang entering the field competition are out—but all other stations worked count. Use any band. Suggestions for equipment combinations are given on page 43 of June *QST*. We expect to give the report on the June F.D. next month. Analysis of scores of reports reveals the first seven or eight of the following combinations most practical and popular for emergency transmitters: 802, 42–42, 71A, 112A, 59–46, 42, 45, 41–'10, '10, 41–42, 42–802, 112A–'71A, 802–210, '10–'10, 71A-802, 37–42, 41–45, etc. Build now! Drop us a line giving your F.D. results, large or small as soon as the August field work is completed.—*F. E. H.*

A Volume-Compressing Method for 'Phone Transmission

Automatic Audio Gain Control Using the Differential Thermal Bridge

By Wilbert B. Smith*

ONE of the major problems facing the broadcast technician and 'phone operator is that of keeping the level fed to the transmitter constant. Too high a level means overload with its attendant distortion, while too low a level means inefficient transmission. The range of levels encountered in the usual run of transmission varies over about 40 db. For proper transmission this variation must be reduced to about 10 db.

So far, the most practical method of gain control seems to be manual; but here the personal equation enters in and slips seem to be the rule rather than the exception. For instance, the operator in anticipation of a peak reduces the gain by 20 db when 10 db would have been sufficient, resulting in the peak being relatively low by 10 db rather than approximately the same level or the original 10 db high. If an automatic gain control could be devised, the personal equation would be eliminated and ideal transmission could be approached. It remains, then, for the engineer to develop such a device having the necessary characteristics.

There are four major requirements to be met in the design of any automatic gain control. First, there must be no audio frequency distortion resulting from its use; second, the device must guard against overload; third, the general character of the transmission must be preserved; and fourth, it must not bring up background noise or purposely weak signals. At first sight this seems like a rather tall order for anything short of a laboratory setup, but by utilizing the non-constant resistance-temperature characteristics of certain metal filaments, a suitable device can be constructed quite simply.

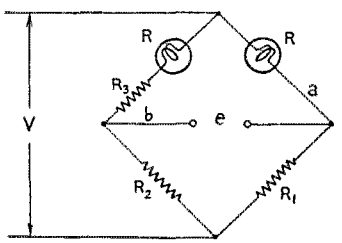

FIG. 1

Consider first an ordinary tungsten-filament electric light bulb. The equation linking resistance with applied voltage is approximately

$$R = R_o + KE^x,$$

which merely means that the resistance increases in proportion to the xth power of the applied voltage. Now, if this increase in resistance can be put to work to regulate the amount of audio energy passing through a circuit, the problem is solved.

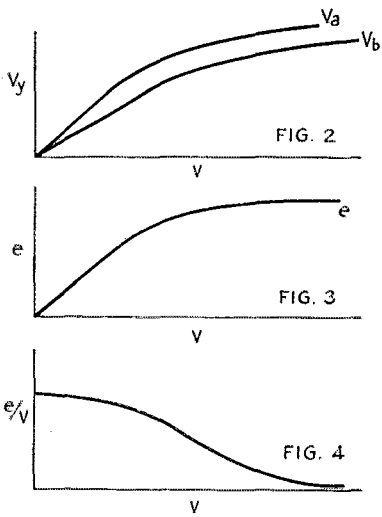

Consider next the differential bridge circuit in Fig. 1. The potential at point a will be

$$V_a = \frac{R_1 V}{R_1 + R} = \frac{R_1 V}{R_1 + R_o + K(V - V_a)^x};$$

and that at the point b will be

$$V_b = \frac{R_2 V}{R_2 + R_3 + R_o + K(V - V_b)^x}.$$

These two potentials are plotted against applied voltage in Fig. 2. It follows at once that the potential difference e will be the difference between these two curves, as in Fig. 3.

* Radio Station CJOR, Hotel Grosvenor, Vancouver, B. C.

It may be seen at once that e is proportional to V as long as V is small; but as V is increased, the ratio e/V becomes smaller, and e becomes more nearly constant. The ratio e/V is plotted in Fig. 4.

Let us now analyze these curves with the automatic gain control in mind. Requirement No. 1 is fulfilled immediately, since being a purely resistance device, it can have no frequency discrimination; and because of the thermal inertia of the lamp filaments, no waveform distortion will take place at audio frequencies. Requirement No. 2 is very closely approximated, as may be seen by curves in Figs. 3 and 4. Very large increases in V cause very little increase in e, thus preventing undue overload. Of course there is the practical limit of the lamps burning out, but this may be overcome by by-passing the excess voltage through some such device as a neon bulb.

Because of the thermal inertia of the filaments, the proportion of loud to soft signals remains momentarily constant; hence the character of the transmission is unaltered, thus fulfilling requirement No. 3. Again, since the control does not begin to take place until quite an appreciable voltage V has been applied, it is impossible to bring up background noises, etc., out of proportion to the rest of the signal, thus fulfilling the last requirement.

It is only fair to remark that this system of automatic gain control has two important features which may or may not be classed as disadvantages; namely, it requires a very definite range of input and it is quite inefficient from the power transmitting standpoint.

In the practical design the choice of values of R, R_1, R_2, R_3, will depend on the degree of control desired and the audio power available to drive the device. If R consists of 2-volt pilot light bulbs, and R_1, R_2, R_3 are each 6 ohms, with the entire bridge driven from a 10-ohm circuit at a maximum level of +16 db there exists a normal attenuation of about 16 db at low levels and of about 30 db at high levels. In other words, a variation of about 26 db is reduced to about 10 db, which is quite permissible for broadcasting. If closer regulation than this is required, two or more such sections might be used in cascade—with, of course, appropriate amplifiers preceding each unit.

The speed with which this automatic gain control is capable of acting depends entirely on the thermal inertia of the lamp filaments. Generally speaking, the time lag is about proportional to the current drawn by the filaments at incandescence. With a filament drawing about 60 milliamperes the time lag is from $\frac{1}{5}$ to $\frac{1}{10}$ second. If a smaller time lag than this is required, special lamps must be obtained since the 60-ma. variety is about the lowest-current type generally available.

Fig. 5 shows a typical amplifier set-up using this system of volume control. The input signal is relatively high-level, +16 db or approximately 0.25 watt, which may be obtained conveniently

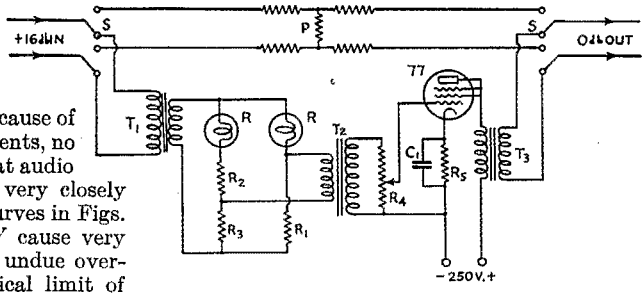

FIG. 5—CIRCUIT OF A TYPICAL SETUP USING AUTOMATIC AUDIO GAIN CONTROL

R—2-volt pilot bulbs.
R_1, R_2, R_3—6-ohm resistors.
R_4—250,000-ohm volume control potentiometer.
R_5—2500-ohm bias resistor.
C_1—25-μfd. by-pass condenser.
S—4 P.D.T. switch to cut out automatic control and cut in pad.
T_1—Matching transformer, 500 ohms to 10 ohms.
T_2—Input transformer, 200 ohms to grid.
T_3—Output transformer, plate to 500 ohms.
P—Compensating pad, about 16 db attenuation; for 500-ohm circuit each arm is about 180 ohms.

from a pair of 89's in push pull. Since the impedance of the thermal bridge is about 8 ohms to 10 ohms, a matching transformer must be used to couple the line to the bridge.

It was found advisable to use a coupling transformer between the bridge and the following amplifier, because of the increased step-up necessary and the leakage normally encountered. The primary impedance of this transformer should not be too low, since otherwise it will tend to equalize the potential between the points a and b, and some of the gain-control effect will be lost. A value of 200 ohms was found to be quite satisfactory.

A switch and compensating pad P may be inserted in the circuit to by-pass the automatic gain control if desired, in which case the pad should have a value equal to the attenuation of the bridge at low levels, minus the gain of the following amplifier with matching transformers, in order to make possible a smooth changeover without disturbing the overall transmission too much.

—···—

Brief

On June 27th the Private Flyers Association started its second annual air meet at the Eugene (Oregon) Airport. 56-mc. tests between air and ground were conducted by members of the Valley Radio Club. W7FIA and W7AHZ operated a rig in a plane which flew over the airport and over the city. Communication was maintained with a ground station manned by W7KL and another ground station, which was connected to broadcast station KORE from where transmissions from the plane were rebroadcast. W7BIK was in charge of the event.

An Electronic Volume Compressor

Easily-Constructed Unit Which Can Be Applied to Almost Any Speech Amplifier

By Robert E. Bullock,* W6MKP and Harry N. Jacobs*

FOR some time we have realized the desirability of incorporating a volume compressor in the speech end of our 'phone rig, but all available methods seemed to be quite expensive and generally required an extensive change in the speech amplifier line-up. Finally, there occurred to us the thought of doing the job electronically, by using one of the variable-mu tubes. We selected the 6L7 pentagrid mixer tube, with its one remote cut-off grid, one ordinary control grid, screen, suppressor, and plate. Around this tube the circuit shown in Fig. 1 was finally derived.

The operation of the circuit is simple. The input voltage—approximately one volt—is fed to the No. 3 grid of the mixer tube through the potentiometer volume control, R_2. A portion of

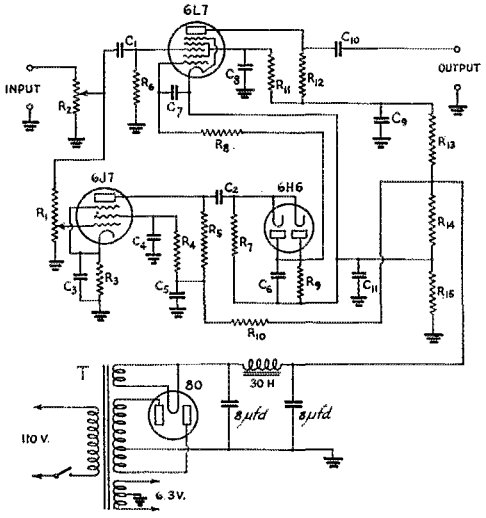

FIG. 1—CIRCUIT DIAGRAM OF THE VOLUME COMPRESSOR

C_1, C_2—*0.1 μfd.*
C_3—*10 μfd., 35-volt.*
C_4, C_5—*0.5 μfd.*
C_6, C_7—*0.1 μfd.*
C_8, C_9—*0.5 μfd.*
C_{10}—*0.1 μfd.*
C_{11}—*10 μfd., 35-volt.*
R_1, R_2—*1-megohm potentiometer.*
R_3—*2250 ohms, 1 watt.*
R_4—*1 megohm, 1 watt.*
R_5—*0.25 megohm, 1 watt.*
R_6—*1 megohm, 1 watt.*
R_7, R_8, R_9—*0.25 megohm, 1 watt.*
R_{10}—*50,000 ohms, 1 watt.*
R_{11}—*25,000 ohms, 1 watt.*
R_{12}—*0.1 megohm, 1 watt.*
R_{13}—*50,000 ohms, 1 watt.*
R_{14}—*12,000 ohms, 20 watts.*
R_{15}—*150 ohms, 1 watt.*
T—*Small power transformer to deliver 250 volts and 6.3 volts.*

the same voltage is also fed to the grid of a 6J7, pentode connected, through the potentiometer compression control, R_1. The amplified a.c. voltage is then fed to the parallel connected plates of a 6H6 diode rectifier, from which is obtained the direct current bias for the No. 1 grid of the mixer tube. An increase in signal strength increases the bias on the 6L7, and thus decreases the transconductance of the tube as the signal input is increased. By this means a considerable amount of volume compression may be obtained.

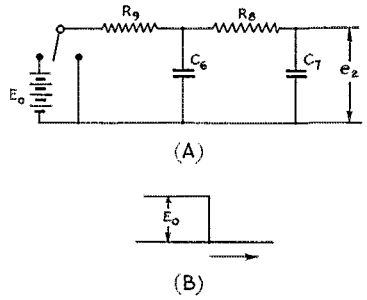

FIG. 2—TIME-CONSTANT CIRCUIT

The choice of values for the condenser-resistor parallel combination in the diode load circuit (C_6, R_9) is a compromise between two conflicting factors. The time of discharge of the combination must be short enough so that any small signal immediately following a large signal will not be lost because of time lag in the bias-voltage change, but the time must be longer than that required for the lowest-frequency audio wave to vary one-quarter of a cycle from its peak value. This last requirement must be met if the wave-form of the signal is to be maintained.

It is necessary to provide some form of audio filter (C_7, R_8) in the lead to the No. 1 grid of the 6L7; if this is not done, audio-frequency voltage from the 6J7 will be impressed on it. As the audio-frequency voltage from the 6J7 is 180 degrees out of phase with the input voltage, serious wave-form distortion will occur if the filter network is omitted. As in the diode load network, the components of the filter are a compromise. If R and C are made too small, wave-form distortion will occur. On the other hand, if they are too large, a large time delay and time lag will occur.

Considering the circuit of Fig. 2, if the voltage applied to R_9 is of the form shown in Fig. 2-B, then the voltage across C_7 at time t_2 seconds later is given by the expression:[1]

*University of California, Berkeley, Calif.

[1] Kellogg and Phelps, "Time Delay in Resistance-Capacity Circuits," *Electronics*, February, 1937.

$$e_2 = 1.17\, E_0 e^{\frac{-.382t}{RC}} = .17\, E_0 e^{\frac{-2.611t}{RC}}$$

where $R_9 = R_8 = R$, and $C_6 = C_7 = C$.

The above circuit is equivalent to the diode load and audio-filter circuits of the compressor. Hence we may use the formula given above to calculate the time delay introduced by the components used.

In our case $R = .25$ megohms (R_8, R_9)
$C = .1$ μfd. (C_6, C_7).
If we let $t = .075$ seconds,

then $\frac{e_2}{E_0} = .37$

Thus it is seen that the bias applied to the grid will be reduced to 37 per cent of its original value, E_0, in 0.075 seconds. This time delay proved to be sufficiently small to give smooth compression.

Considering the effect on the wave-form, the time required for a 100-cycle audio wave to pass from a peak value to zero is 0.0025 seconds, the

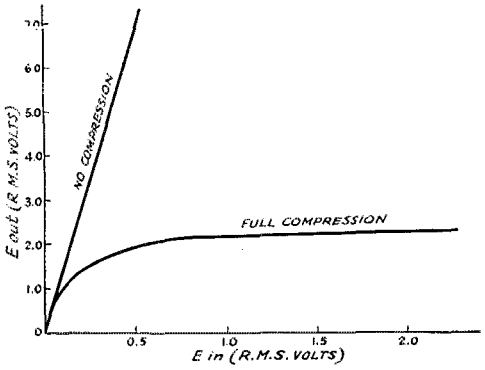

FIG. 3—CHARACTERISTIC OF AMPLIFIER WITHOUT COMPRESSION AND WITH FULL COMPRESSION

time of a quarter-cycle. If the grid bias can change appreciably during this time, distortion will occur. Substituting $t = 0.0025$ in the equation, we find that $\frac{e_2}{E_0} = .99$

Thus the bias change at 100 c.p.s. is approximately 1 per cent, which is negligible. At higher frequencies the variation is, of course, much smaller.

The whole assembly is mounted on a 7- by 9-inch chassis, and if power is to be obtained from the main amplifier, an even smaller space will be required. No special precautions other than the ordinary need be taken in the construction. All leads at high a.c. potential with respect to ground must be well shielded, and shield caps should be placed on the 6J7 and the 6L7 to avoid hum pick-up.

There are several advantages to this type of compression. The amount of compression is continuously variable from zero to maximum by means of a single control. The voltage required to operate the device correctly is about one or two volts signal input, which may be obtained from the output of the pre-amplifier of a crystal mike, condenser mike, or directly from a single-button mike through its transformer. Most of our tests were made by feeding a magnetic pick-up directly into the input of the compressor. It is possible to increase the *average* level, for music, about 10 db., which should at least double the percentage modulation. This doubling of the percentage modulation is practically as effective as increasing the carrier power four times. Another advantage is the prevention of overmodulation from sudden bursts of sound. These two features alone make the compressor worth while to every 'phone man.

Central Division Convention

Detroit, Mich., September 4th, 5th, 6th

WITH the mammoth program arranged to insure every one a wonderful visit, excellent speakers, fine entertainment and prizes galore, the convention committee of the Greater Detroit Amateur Radio Council has obtained special hotel rates as low as $2.00 per day, for the convention to be held at the Hotel Tuller, Detroit, Mich., Sept. 4th–5th–6th. The Ladies Entertainment Committee has prepared a special program with many valuable prizes, tours, etc. The convention begins Saturday morning; the big Jamboree, with free refreshments, Saturday evening and the gala banquet Sunday evening. The registration fee for the entire convention, including the banquet is only $3.00 per person.

See your local railroads and bus companies regarding special rates on purchases of tickets in groups, as some very substantial reductions in the regular rates may be obtained in this manner.

Mail advance registrations direct to the Hotel Tuller to insure choice reservations.

Midwest Division Convention

October 9th and 10th, at Kansas City, Mo.

THE advance ticket sales indicate a wide interest in the Midwest Convention to be held in Kansas City, Mo., October 9th and 10th. Present indications are that this convention will take on the status of a national meeting. A program replete with interesting events for the "Hams" and "Hamesses" has been prepared and the different committees will be ready to take you in tow the moment you arrive at the big 6½ million dollar Municipal Auditorium. Tickets purchased in advance entitle the holder to chances on special valuable prizes. Orders for tickets should be sent to D. H. Cameron, R.F.D. 4, Kansas City, *Kansas*, enclosing check or money order in the amount of $2.50 for each ticket.

Negative-Peak Automatic Modulation Control for Plate-Modulated 'Phone Transmitters

IF EVERY one of our 'phone transmitters could be made over-modulation proof, that greatest affliction to amateur 'phone communication would be remedied forthwith. For, despite the constant campaign against over-modulation and the government regulations against it, there is still altogether too much "side-band splatter" and other evidence of the spurious resulting from pushing the modulation level beyond the permissible limit. It is realized that instances of exceeding the transmitter's modulation capability are mostly unintentional. Voice level and speaker's position with reference to the microphone can't be kept rigidly fixed. What is needed is automatic "means to insure," built right into the transmitter, which is practically fool-proof. Such means we now have at hand. Previous articles [1] have described speech-amplifier compression circuits. The contributions of Messrs. Plummer and Waller presented herewith describe how to employ the modulator itself as the control agency. Although similar, the systems described were worked out independently by the two authors and are printed in the order received, W2CMI's first and W2BRO's second. Since these systems not only give automatic overmodulation insurance but also provide volume compression, higher average percentage modulation increases the effective signal and gives the operator a considerable extra dividend on his investment.

Over-Modulation Control and Volume Compression with Variable-Mu Speech Amplifier

By W. Bradley Plummer,* W2CMI

IN KEEPING with the rapid advances that have been taking place recently in the design and control of amateur equipment, it seems fitting that automatic volume control circuits should be incorporated in modern 'phone transmitters. The advantages to be obtained include the maintenance of high modulation level, the elimination of obnoxious overmodulation and relief from the troublesome necessity of adjusting the voice to the microphone or the amplifier gain to the voice as must now be done in order to obtain uniform performance. Volume compressing methods [1] which have been described previously are capable of accomplishing these objectives, but the circuit arrangement treated here has the advantages of requiring no audio coupling transformers, of being largely self-adjusting and, in addition, of providing attenuation to the amplification of the audio signal only after a high modulation level has been reached. A high audio surge will cause the a.v.c. action to take effect almost immediately, and this effect will then persist for as long as several seconds, if desired, permitting the speaker time to take a breath without a great change in amplifier gain.

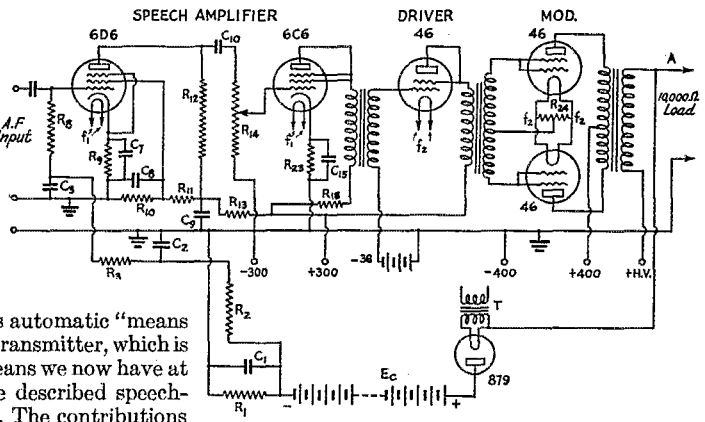

FIG. 1—CIRCUIT ILLUSTRATING THE OPERATION OF THE AUTOMATIC CONTROL
Component values are given with Fig. 2.

The control voltage is applied to the grid of a variable-mu screen-grid tube in exactly the way that it is done conventionally in receivers; when the grid bias is increased negatively, the overall gain of the stage is decreased, accomplishing the desired control. The novel feature of the circuit is the method used to obtain this controlling voltage. Fig. 1 shows the experimental circuit which was used, while Fig. 2 shows a practical circuit incorporating the same features applied to a typical higher-power line-up.

The functioning of this circuit is based upon

* Department of Electrical Engineering, Iowa State College, Ames, Iowa.

[1] W. B. Smith "Volume-Compressing Method," *QST*, Sept., 1936; R. E. Bullock and H. N. Jacobs, "Electronic Volume Compressor," *QST*, Sept., 1937; J. Hanson, "A.V.C.-Controlled Pre-Amplifier," *QST*, Sept., 1937.

the fact that the instantaneous potential applied to the plate circuit of the modulated stage of a transmitter should never become negative, for if it does the sudden interruption of plate current sets up transient signals which largely account for the "splashing over" which is characteristic of over-modulation. It is desired, then, to have the a.v.c. take control before the potential at point "A", Fig. 1, can become zero at the instant during an audio cycle when the audio voltage opposes the applied voltage most strongly. In practice it is necessary that control voltage be obtained as soon as the potential at "A" becomes some pre-determined low value. This is accomplished by connecting a source of d.c. voltage to the plate of the control rectifier making its plate positive relative to ground. Now as soon as the potential at "A" becomes less positive than the rectifier plate, current will begin to flow in the tube, since its filament is negative relative to its plate. This current causes a voltage drop in R_1 which is carried to the control grid of the variable-mu amplifier tube, the 6D6 in this case, causing a reduction in gain of the amplifier.

In order to avoid audio feedback, this control voltage must be adequately filtered, which is done in the usual manner by use of resistances and condensers, as shown. The main filter condenser C_1 must be large, for it must smooth out the sudden voltage surges to which it is subjected by virtue of the fact that current flows through the rectifier only during a very small part of any audio cycle. It will be noted that the a.v.c. voltage is available only after sufficient time has passed for C_1 to charge through the rectifier. Since the circuit through which this charging current flows has low resistance, only a fraction of a second is required. But the discharge of C_1 occurs slowly, the current flowing entirely through R_1 or through the condenser itself as normal leakage. Thus, a delay of a few seconds or more may be obtained by choosing the proper value for R_1.

It was found desirable to operate the controlled tube at a relatively high audio level—not as the first tube following a low-level microphone, for example. The reason for this is that less trouble from audio feedback through the control circuit is then experienced, so that R_2 and R_3 may be made smaller, reducing the time required for the a.v.c. to take effect. It was also found that the 6D6 was unusually sensitive to stray *electromagnetic* fields, but this undesirable pick-up is negligible when the tube operates at high signal levels.

The performance of this circuit is entirely satisfactory not only from the consideration of the constancy of output voltage with varying input signal voltages, but also when its freedom from distortion is considered. By use of an oscilloscope, with constant input wave form the output wave form was seen

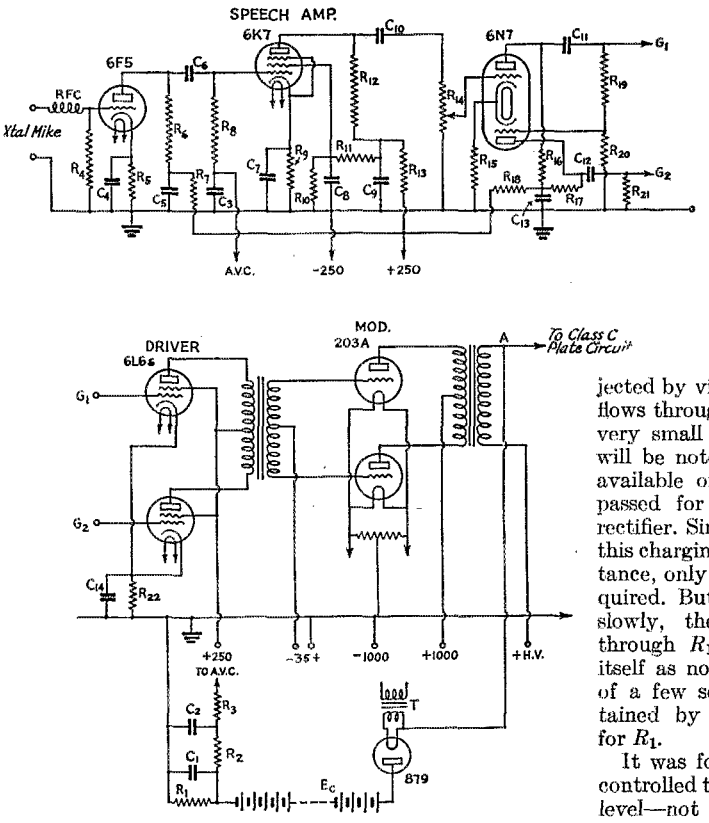

FIG. 2—THE AUTOMATIC CONTROL CIRCUIT APPLIED TO A HIGHER-POWERED MODULATOR UNIT

Values given also apply to the circuit of Fig. 1.
C_1, C_5—*8-μfd. electrolytic.*
C_2—*0.01-μfd.*
C_3—*0.05-μfd.*
C_4, C_7, C_{15}—*10-μfd. 25-v. electrolytic.*
C_6, C_8, C_{10}, C_{11}, C_{12}—*0.1-μfd.*
C_9, C_{13}—*0.5-μfd.*
C_{14}—*10-μfd. 50-v. (optional).*
R_1—*500,000 ohms (or less).*
R_2—*2-megohm or less (sometimes zero).*
R_3, R_{11}, R_{12}—*100,000-ohm.*
R_4—*5-megohm.*
R_5—*2600-ohm.*
R_6, R_{16}, R_{17}—*250,000-ohm.*
R_7, R_{10}—*50,000-ohm.*
R_8, R_{21}—*500,000-ohm.*
R_9—*2000-ohm.*
R_{13}—*20,000-ohm.*
R_{14}—*500,000-ohm variable.*
R_{15}—*3000-ohm.*
R_{18}—*10,000-ohm.*
R_{19}—*481,500-ohm.*
R_{20}—*18,500-ohm.*
R_{22}—*125-ohm.*
R_{23}—*1000-ohm.*
R_{24}—*20-ohm.*
T—*2.5-v. filament transformer, high-voltage insulation.*
Ec=*90 v. (when h.v.=700).*

to remain unaltered when the input voltage was varied throughout a range of 20 to 1. During this variation the output voltage varied only about ten percent. A variation of 40 to 1 in input voltage varied the output voltage about twenty per cent. This represents a change in amplifier gain of more than 30 db, which should be adequate for ordinary amateur uses. Fig. 3 gives a graphical picture of the relation of output voltage to input voltage.

Another characteristic of the circuit which

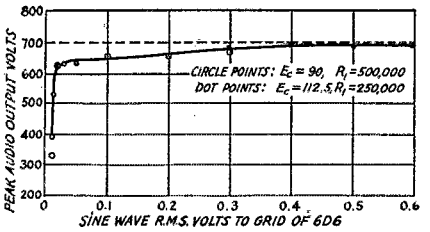

FIG. 3—ILLUSTRATING THE CONTROL CHARACTERISTICS OF THE SYSTEM

would be of particular value in case it were desired to operate with reduced power is illustrated in Fig. 3. In consequence of the means by which the control voltage is obtained, the audio output of the modulator automatically adjusts itself to variations in d.c. voltage applied to the modulated stage.

Extensive laboratory tests of this circuit have been made using both microphone and phonograph pickup as well as the test signals used to obtain data for the curves. The quality of both speech and music was found to be unimpaired when the input signal level was varied over a wide range. That instantaneous overmodulation can occur if a sudden loud impulse is applied to the amplifier is recognized, but it can exist only during a fraction of a second, reducing the resulting interference to a minimum. The values given for E_c, C_1, R_1, R_2 and R_3 are not at all critical, and may well be modified to suit individual situations. An alteration in the detail of the audio rectifier circuit could adapt this scheme readily to public address systems.

Negative-Peak Control with 6L7 Speech Amplifier and All-A.C. Operation

By L. C. Waller,** W2BRO

EVERY experienced 'phone operator knows how much disturbance an over-modulated carrier can cause in our over-crowded 'phone bands. Such a signal frequently renders an entire 'phone band practically useless to those unfortunate amateurs who happen to be located near the offending station. It may even cause bad interference to stations at a great distance, under certain conditions. Of course, it is illegal to over-modulate a 'phone transmitter, or to modulate one "in excess of its modulation capability"; but nevertheless many stations do not have modulation-monitoring apparatus which is adequate for the purpose.

** RCA Radiotron Div., RCA Mfg. Co., Harrison, N. J.

It is difficult, by ordinary means, to prevent some over-modulation, even when a cathode-ray oscilloscope is available for monitoring purposes. If the gain control is set so that practically no modulation peaks "overshoot," then the average modulation is certain to be quite low. In addition, two persons seldom speak at exactly the same sound level, and one person does not always speak at the same level. The distance of the speaker from the microphone is still another important variable factor.

With these thoughts in mind, the writer set about to see what could be done along the line of automatic modulation control, or modulation limiting. With a.v.c. circuits as applied to r.f. stages as a guide, it seemed natural to consider some sort of audio a.v.c. wherein the over-all gain of the speech amplifier is automatically controlled. Of equal importance is the source of controlling voltage.

The control voltage should preferably come from the modulator itself or from the modulated r.f. carrier, rather than from the speech amplifier. Such things as carrier shift due to d.c. plate voltage changes and audio voltage variations due to modulation transformer frequency characteristics should have no effect on the modulation-control system. In addition, the system should operate on the *negative* modulation peaks, rather than on the positive peaks, because it is excessive negative peaks which cause carrier cut-off and a broad, side-splattering signal.

A basic system which seems to meet all these requirements is shown in Fig. 4. A 6L7 is used as the control tube in the familiar volume-expander circuit (circuit No. 10 in the RC-13 Receiving-Tube Manual), working "backward" as a volume contractor. The No. 3 grid normally operates at $-2\frac{1}{2}$ volts, at which bias the gain of the stage is quite high, the mutual conductance of the 6L7 being in the order of 1200 micromhos. When the negative bias on the No. 3 grid is increased to about -10 volts, the mutual conductance and gain of the tube are reduced to very low values.

The negative automatic-modulation-control (a.m.c.) voltage is obtained from the output of modulation transformer T_1 through a half-wave, *high-vacuum* rectifier. A Type 836 is shown in the diagram, although almost any high-vacuum tube can be used provided it has a rating high enough to withstand the peak inverse voltage applied. When the *negative* a.f. peaks at point "X" on T_1 exceed -1160 volts (that is, 1250–90, the 90 volts being an "advance" bias from B_1), the rec-

tifier passes current, developing a d.c. voltage drop across R_1. The rectifier arrangement is similar to the negative-peak over-modulation indicator described previously in *QST*.[2] The d.c. voltage from R_1 is fed through an r.f. and a.f. filter to the No. 3 grid of the 6L7 as an a.m.c. bias. In the example shown, whenever the negative modulation peaks exceed 93 per cent modulation (1160/1250), the gain of the 6L7 is reduced rapidly, the speed depending on the time constant of R_2, R_3 and C_1, the latter being an a.f. by-pass condenser. Thus, the a.m.c. bias starts to "take hold" a little before the carrier is over-modulated. If the time constant of the circuit is made too long, quite a few a.f. peaks may cause over-modulation before the gain is reduced, especially on a loud, sudden signal. If the constant is too short, trouble from "motor-boating" may be experienced, due to phase shift in the a.f. amplifier. The percentage of modulation at which the a.m.c. begins to act can be controlled by changing the value of the "advance" bias from B_1. It is very important that r.f. voltage be kept out of the 6L7 stage. The a.m.c. bias lead from the audio rectifier should be carefully shielded, and should include adequate r.f. filters.

The No. 1 grid of the 6L7 is biased to about − 10 volts, the cathode being tapped at + 10 volts on the voltage divider. This would place a no-signal bias of − 10 volts on the No. 3 grid also, except that 7½ volts are bucked out by battery B_2. Thus, the desired no-signal bias of − 2½ volts is actually applied to the No. 3 grid. The a.f. signal applied to the No. 1 grid, from microphone transformer T_2, should have a *peak* value not exceeding one volt; larger values may cause a.f. distortion.

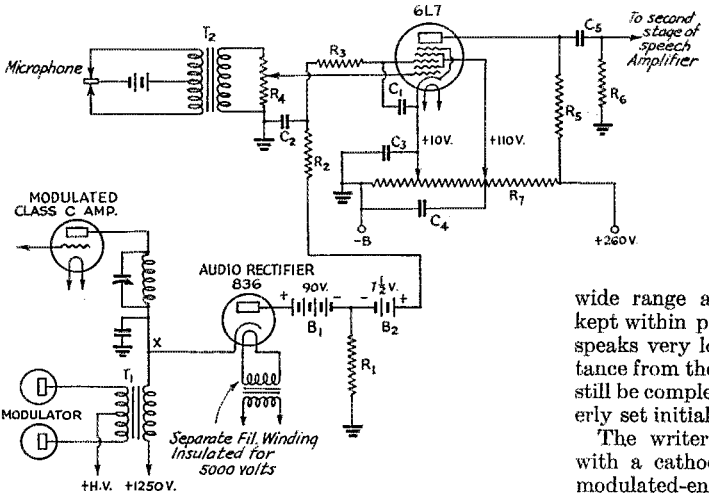

FIG. 4—SIMPLE AUTOMATIC MODULATION CONTROL CIRCUIT

Transmitter ground and a.f. amplifier ground must be connected together.

C_1—*2.0-μfd. 250-volt paper.*
C_2—*0.01-μfd. mica.*
C_3—*25-μfd. 25-volt electrolytic.*
C_4—*8-μfd. 250-volt electrolytic.*
C_5—*0.05-μfd. tubular.*
R_1—*0.5-megohm 1-watt.*
R_2—*0.1-megohm 1-watt.*
R_3—*1.0-megohm 1-watt.*
R_4—*0.5-megohm potentiometer.*
R_5—*0.1-megohm 1-watt.*
R_6—*0.5-megohm 1-watt.*
R_7—*25-watt 20,000-ohm bleeder.*

No wave-form distortion is caused by the action of the a.m.c. voltage, because it serves only to reduce the over-all gain of the entire speech system. The excessive a.f. peaks are not merely lopped off, but are suitably reduced, along with peaks of lesser amplitude. The volume control R_4 can be adjusted over a fairly wide range and the modulation still be kept within proper limits. If the operator speaks very low, or at a considerable distance from the microphone, the carrier can still be completely modulated if R_4 is properly set initially.

The writer tested this a.m.c. circuit with a cathode-ray oscilloscope, using a modulated-envelope type of pattern. Control R_4 was set so that, without a.m.c., a low whistle caused heavy over-modulation and carrier cut-off on the negative peaks. With the a.m.c. connected, and R_4 in the same position, a loud whistle produced no over-modulation—just a perfect pattern. The loud signal, if made very suddenly, allowed a few peaks to over-shoot; however, the oscilloscopic pattern "sprang" back to a perfect picture so rapidly that the eye could hardly detect the flaw, and the ear (with a receiving monitor) not at all.

Tests made with a number of other stations on 14-Mc. 'phone showed the modulated carrier to be very clean and sharp, without a trace of "side-splatter." In addition, *the signal seemed to have an unusual tendency to penetrate QRM*. This was not expected originally, but on analysis it apparently results from the fact that the *average* modulation percentage is held at a considerably higher level with a.m.c. than without it. Low-level sounds and syllables that ordinarily would cause little modulation of the carrier can be boosted considerably because of the higher-than-normal setting of the main gain control. Then, when the higher-amplitude signals come along, they are automatically limited in their effect on the carrier.

AN "ALL-A.C." CIRCUIT

The battery circuit of Fig. 4 has one serious disadvantage. The advance-bias battery B_1

[2] H. E. Seyse, "Over-modulation Indicator," p. 49, *QST*, March, 1933; L. C. Waller, "Applications of the 'Magic Eye,'" *QST*, Nov., 1936.

causes the a.f. by-pass condenser C_1 to charge up to almost the full voltage of B_1, as the result of the rectifying action of the 836 and the Class-C amplifier tube when the plate voltage is removed from the latter during stand-by periods. Thus, when the carrier is placed on the air after a stand-by, either C_1 must be shorted temporarily to dissipate the charge, or the speech system is effectively cut off until the charge leaks off through R_1, R_2, and R_3. To avoid this trouble and to eliminate the batteries, the circuit of Fig. 5 is suggested.

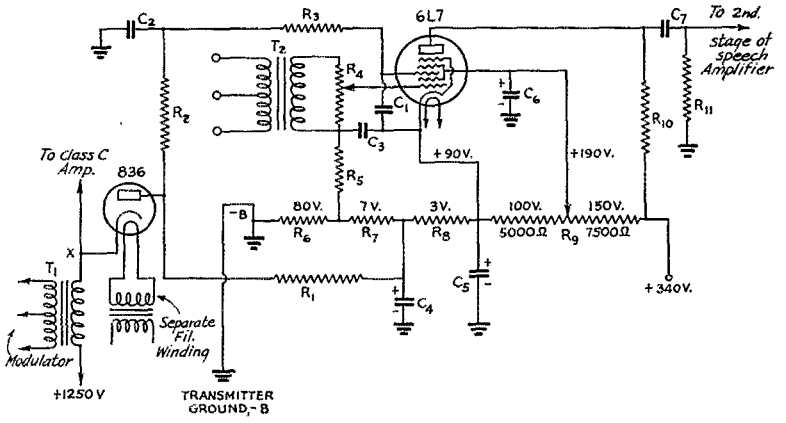

FIG. 5—THE ALL A.C.-OPERATED A.M.C. CIRCUIT
C_1, C_2—Same as in Fig. 1.
C_3—0.5-μfd. paper.
C_4, C_5, C_6—8-μfd. electrolytics.
C_7—0.05-μfd.
R_1, R_2, R_3, R_4—Same as in Fig. 1.
R_5—0.5-megohm ½-watt.
R_6—4000-ohm 5-watt.
R_7—350-ohm 1-watt.
R_8—150-ohm 1-watt.
R_9—12,500-ohm 25-watt bleeder, tapped as shown.
R_{10}—0.1-megohm 1-watt.
R_{11}—0.5-megohm 1-watt.

In Fig. 5, the proper voltages for the 6L7 and the advance bias for the rectifier are all obtained from the voltage divider which supplies the d.c. voltages for the speech amplifier. With this arrangement, it is necessary that the power pack deliver 250 volts for the 6L7 plus 90 volts for the advance bias, because the cathode of the 6L7 is tapped in at + 90 volts above ground. Thus, the advance bias for the a.m.c. rectifier is supplied by the bleeder, and the charging of C_1 is eliminated. In the example shown, the power pack voltage is 340 volts, or 250 + 90. If the modulated Class-C amplifier happens to be operating at 2500 volts, an advance bias of about 180 volts may be required, and a power pack voltage of 430 volts. In general, an advance bias of about 7 per cent of the final amplifier's d.c. plate voltage will be found suitable. This circuit, being all-a.c. operated, is the one recommended for general use.

The use of a.m.c. on amateur 'phone transmitters, with a properly-designed and adjusted circuit, should effectively remove all the problems which have for so long been caused by over-modulated carriers. If put to general use, the practical effect of a.m.c. will be effectively to widen our 'phone bands. In due time, no doubt the use of some such automatic modulation control may even become mandatory. In any event, the operator of a 'phone transmitter employing a.m.c. will not have to watch continually his modulation monitor or be forever adjusting the speech gain control.

Southwestern Division Convention

Tempe, Arizona, October 23rd and 24th

YES, the Southwestern Division Convention for 1937 is to be held in Arizona under the auspices of the Tempe Amateur Radio Association. All the activities will take place at the State Theatre, which is owned and operated by "Red" Harkins, W6BUQ, and who is also the Chairman of the Convention Committee. Put the dates down—Saturday and Sunday, October 23rd and 24th, respectively. A good program is in progress of preparation at the time of writing this announcement and further information may be obtained from "Red" Harkins, W6BUQ, care of State Theatre, Tempe, Arizona.

What the League Is Doing

(Continued from page 21)

Further important promotions in the Engineering Department are now to be expected, which we shall duly report.

Membership Committee

It will be remembered that the Board appointed a committee to work for increased A.R.R.L. membership and for methods of making membership more attractive, etc. This Board's Committee, consisting of Messrs. Martin (chairman), Blalack and Norwine, has been actively at work. They are approaching the S.C.M.'s and clubs for suggestions, they are running some advertisements in *QST*, and they have prepared a large circular on the advantages of A.R.R.L. membership which is being handed out at the door at conventions and hamfests this autumn. Watch for it and read it. It of course will probably be winter before the Committee is really down to bedrock in the intricacies of its studies.

Designing the First Stage of the Speech Amplifier

A Pentode Circuit for Low Hum and R.F. Pickup

By Thomas A. Gross,* W1JZM, VE1IN

THE input stage of a speech amplifier largely determines the performance of the whole amplifier. So much can be done by intelligent design of this stage to reduce r.f. pickup, "motor-boating" and hum that it is worth while to study their design.

Most amateurs start out with two strikes against them in their efforts to obtain good amplifier performance by using a triode in the input stage. The pentode embodies many advantages which greatly outweigh their slightly increased cost. Changing a triode over to the pentode circuit will result in extended high frequency response, higher gain, and greatly reduced r.f. pickup.

The increased gain may be expected, but many are not aware of the other two advantages made possible by the pentode. The reduction of radio frequency is a result of the improved isolation afforded by the pentode circuit. The shielding of the screen grid has a similar effect to the neutralization of a triode speech amplifier tube. Indeed, triode speech amplifiers in broadcasting stations are usually neutralized.

The high frequency response can be extended when using a pentode because of its lower capacities. The pentode can work into a higher load impedance for a given high frequency attenuation than is possible with a triode. When a triode is used with a high loading resistance, as is necessary with the high-mu tubes, the higher speech frequencies suffer attenuation. On the other hand, pentode amplifiers can give reasonable gain even at frequencies used in television amplifiers.

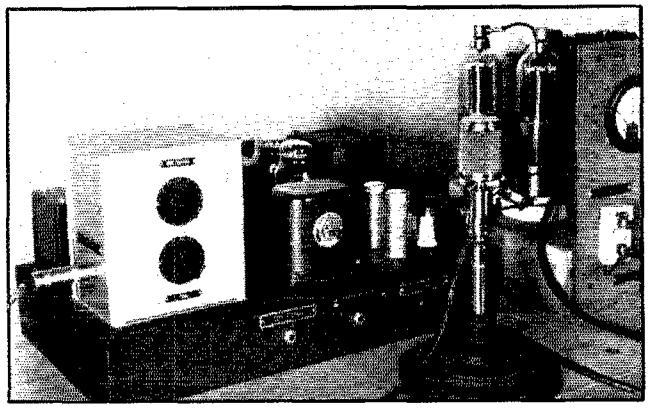

THE PENTODE INPUT STAGE ELIMINATED R.F. PICKUP IN THIS SPEECH AMPLIFIER UNIT BUILT BY THE AUTHOR FOR THE BOWDOIN EXPEDITION STATION, VE1IN

In the accompanying diagram of Fig. 1 is the circuit of a simple but very effective speech input amplifier, combined with the coupling network to the following stage. It is not intended that the circuit be copied exactly as shown. The amateur should make changes necessary to accommodate his requirements for frequency response, available supply voltages, etc.

Most of the pentode tubes can be used in this circuit without changing the circuit constants. The 6J7 tube is suggested because it is small, self-shielded and is of the sharp cut-off type. Sharp cut-off tubes have higher gain and lower plate current than the variable-mu tubes. The last point is important because lower values must be used for the decoupling resistor R_6 and the plate loading resistor R_5. Representative of the sharp cut-off types are the 57, 6C6, 6J7, and the 954. The last tube, one of the acorn types, can be used to advantage in very small amplifiers.

Many prefer to use a bias cell in place of the cathode-resistor bias system shown in the diagram. This practice is desirable when a large condenser for C_2 cannot be obtained. The bias battery might cause trouble, however, when strong r.f. fields are present and there is grid rectification of the r.f. voltage.

The recommended values for the circuit constants are given in the diagram. Some of these constants may be altered to adapt the amplifier for the amateur's particular needs. For instance, R_5 and R_6 should be reduced from the indicated values when the available supply voltage is less than 250 volts. They may be replaced by high-impedance audio chokes to keep the gain up to a satisfactory level. The chokes have a lower d.c. resistance with high impedance at audio frequencies, which permits high gain with low supply

* Bowdoin College, Brunswick, Maine.

voltages. However, chokes should not be used except under special conditions because they tend toward hum and frequency distortion.

The combination of the gain control, R_7, and the grid leak for the second stage, together with the coupling condenser, C_5, is capable of frequency discrimination. An increase in either C_5 or R_7, or both, will bring up the bass response. With the values indicated in the diagram cut-off will begin at approximately 150 cycles, which is satisfactory for most amateur applications. If it is desired to attenuate the low frequencies further, to improve intelligibility or reduce hum, the condenser C_5 can be reduced in size. This practice is limited because of the phase distortion which develops when very great attenuation is attempted. The dialogue equalizer or the more complicated high-pass filter provide splendid means to attenuate the bass response of the amplifier. The high-pass filter has the advantage of a very sharp cut-off characteristic while in other equalizers the attenuation obtained bears a fixed relation to the frequency.

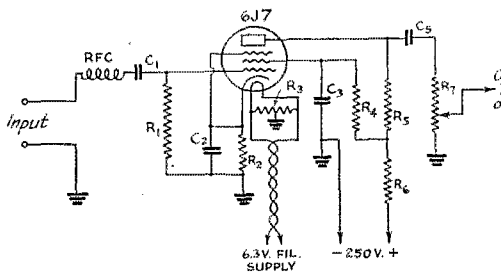

FIG. 1—THE SPEECH INPUT CIRCUIT UNDER DISCUSSION

C_1—0.1 μfd.
C_2—10 μfd. or larger.
C_3—0.1 μfd. or larger.
C_4—0.5 μfd. (see text).
C_5—0.006 μfd. (see text).
R_1—4-megohm grid-coupling resistor.
R_2—3000-ohm cathode resistor.
R_3—20- to 50-ohm filament center-tap resistor.
R_4—1-megohm screen-voltage dropping resistor.
R_5—0.25-megohm plate resistor.
R_6—50,000-ohm (see text).
R_7—0.5-megohm volume control (see text).

It is important that the condenser C_5 and the resistor R_7 be adjusted not to pass more of the low frequencies than actually needed. If this rule is not followed the possibilities of "motor-boating" and high hum level is increased. The flat response required of program amplifiers in broadcasting stations is actually undesirable for amateur service. The frequencies below 200 cycles are practically useless from the standpoint of intelligibility, yet it is these frequencies which contain the bulk of the speech energy. A high-pass filter designed to cut off at 250 cycles will eliminate all of the hum (up to a fourth harmonic at 240 cycles) developed in the previous stages and, at the same time, add greatly to the effectiveness of the signal.

When selecting condenser C_5 choose only one of the very best quality. If the resistance of the condenser is below 500 megohms, the bias on the following tube will be affected. Use a mica condenser if possible.

The cathode resistor by-pass condenser should be as large as is consistent with cost. It has been a practice to use a condenser as small as is needed for satisfactory bass response. It may seem logical to attenuate the low frequencies by reducing its value and thus cause degeneration at those frequencies. However, if this condenser is smaller than 10 μfd. the hum level will increase. A very pronounced hum will result if the heater leads are not balanced to ground with a center-tapped resistor or filament transformer secondary. I have noticed that this hum will develop even when d.c. is used on the filament unless the leads are center-tapped or at least one side connected to ground.

A very common mistake that is made, even in many published circuits, is to use decoupling in the grid circuit of any resistance- or impedance-coupled amplifier. Do not attempt to isolate the "cold" end of either R_1 or R_7 with a decoupling resistor. A decoupling network at R_1 will place the case of the microphone above ground, which will encourage hum pickup. If decoupling is used at R_7 the cathode resistor will not be by-passed and degeneration will result. However, should a transformer be used in either grid circuit, decoupling is then very desirable.

The decoupling network consisting of R_6 and C_4 should always be used, providing that the supply voltage is adequate. The network will cause a drop in the d.c. voltage on the plate of the tube but will reduce the tendency toward "motor-boating" and will iron out the ripple of the supply voltage. To function properly, the resistance of R_6 should be at least 25 times the capacitative reactance of C_4 at the lowest frequency which must be filtered.

It is desirable to locate the gain control R_7 at least one stage from the input circuit. It is then able to reduce hum and other noise which has developed in the preceding stages. Only when the magnitude of the signal voltage is great enough to overload the input tube should the volume control be situated in the input circuit.

The hum level will increase if multiple grounds are used to ground the metal braid on shielded leads. If shielded wire is used it is important that the braid have a good ground—but at only one place.

The two best tubes to use in the following stage are the 6J5 and the 6C5. The former has a lower plate impedance than the 6C5 and it is the more desirable of the two when the second stage is called upon to deliver small amounts to power. The 6C5, however, has better insulation and should be used when only voltage amplification

(Continued on page 98)

NOW! the World's Champion Telegrapher Offers You His Radio Key

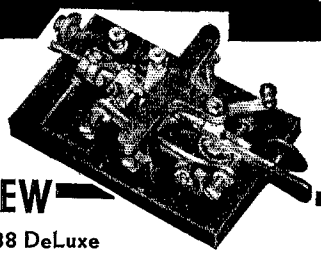

NEW

1938 DeLuxe
MAC KEY for SPEEDY, TIRELESS RHYTHMIC SENDING

- New dot stabilizer, selected mainspring. Heavy Marbleite base "stays put." Big silver contacts, large adjustment screws. In every detail the finest ever produced. Worth many times the low net price of $9.50.
- Standard model MAC KEY. Essentially the same as the De Luxe, only $7.50.
- MAC STRAIGHT KEY — acclaimed by the experts. Excellent balance. Heavy base. Priced so every operator can have one. Only $1.50 net.
- MAC OSCILLATOR — 1000, 800 or 600 cycle notes with tone control. Amazing value, only $4.50 net.
- MAC PRACTICE SET — a practical instrument of commercial caliber. Employs MAC STRAIGHT KEY and MAC HUMMER. Just $2.95 complete.
- MAC HUMMER, $1.50.
- MAC AUTO, $69.

See your jobber or write for details.

T. R. McELROY
175 Congress Street, Boston, Mass.
WORLD'S CHAMPION TELEGRAPHER

PRECISION CRYSTALS

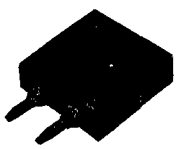

Crystal Holder

Highest quality crystals, one inch square, carefully ground for frequency stability and maximum output. Be sure of your transmitter frequency — use PRECISION CRYSTALS.

Low frequency drift crystals (Type L T C) supplied within 0.1% of your specified frequency and calibrated to within 0.03% are priced as follows: 1750 and 3500 kc. bands — $3.50 each. 7000 kc. band $4.00 each. Holder $1.00.

(Holder as illustrated to fit G.R. jacks or round holder to plug into a tube socket can be furnished. G.R. jacks to plug illustrated holder into — $.15 pair.)

'X' cut PRECISION Crystals carefully ground for maximum power supplied within 0.1% of your specified frequency and calibrated to within 0.03% are priced as follows: 1750, 3500 and 7000 kc. bands — $3.00 each. Add $1.00 if holder is desired.

'AT' cut crystals for commercial use quoted on at your request. When ordering our product you are assured of the finest obtainable. Now in our seventh year of business.

PRECISION PIEZO SERVICE
427 Asia Street Baton Rouge, La.

cabling and installation of protective relays and switches was done on board ship. A type of varnished-cambric covered wire which will stand a test of 12,000 volts was used for all high-voltage leads.

A message dated October 28th to A.R.R.L. Hq. was received by W1DF saying that the following stations had been worked by OX2QY-W10XAB-WAWG up to date of Oct. 28th:

W1ADM W1AQF W1AQT W1BLO W1CC W1CRW W1DF W1EH W1IAS W1IED W1JND W1JNH/2 W1JZA W1KCK W1LZ W1SZ W1ZB W2AN W2AZ W2BYP W2CIF W2CQL W2CYS W2EEN W2FZY W2GTZ W2GUM W2IJG W2IXY W2JT W2PP W2QL W2WC W3ANH W3BEM W3BSY W3CIM W3CZS W3DHM W3DPU W3EMA W3EMM W3ETV W3EXB W3FQP W3GIH W3QP W4AHH W4BAZ W4BYY W4CYU W4DCR W4DSY W4EQM W4ERT W4MS W4QI W4TO W5ACF W5ASG W5COU W5CYC W5ECT W5EGQ W5FHJ W5FIY W6EW W6EXQ W7ALZ W7AMX W8AON W8AYN W8BTI W8CJG W8CJJ W8CRA W8DFH W8DHM W8FJN W8GYB W8HXO W8HZU W8ISK W8ITK W8KML W8LJ W8LPI W8LRJ W8LTR W8LYQ W8MAH W8MPX W8NHP W8NJP W8NWV W8NXQ W8NYD W8ORQ W8POQ W8PTD W8QDU W8QFI W8QGU W8QXT W8RL W8WI W8ZY W9ADN W9AFB W9AKI W9BBU W9BCV W9BEZ W9CJJ/9 W9DGL W9EBQ W9EME W9FJK W9FKA W9FOV W9FS W9HER W9HVT W9IAC W9IVG W9JIE W9MDF W9NER W9QI W9SDQ W9UAZ W9VDY W9VXZ W9WZW W9YOL W9ZDO W9ZTO CO2EG CO7CX HI7G LU9BZ VE2GA VE3QL VE3RN VE4BB VE4RO VO6JQ.

Army-Amateur System Activities

(Continued from page 32)

The Ninth Corps Area won first place, the Third Corps Area second, with the Seventh Corps Area third.

W8GMZ, Third C.A., had the highest individual score of 75 points. W6CVL, Ninth C.A., was second with 56 points, and W9BNT of the Seventh C.A. and W6KFC of the Eighth C.A. tied for third place with 53 points each.

Designing the Speech Amplifier

(Continued from page 34)

is needed. The gain of the input amplifier described in this article is about 21 db. The 6J7-6J5 combination is an ideal one to drive a pair of 2A3 tubes in Class-AB. The gain is adequate for use with microphones of — 60 db or higher output level.

These design considerations have worked out very well in practice. In the photograph is an amplifier which was built by the author for the Bowdoin Expedition station, VE1IN. This was originally designed with a triode instead of a pentode in the input stage. When an attempt was made to transmit bird calls to a receiver and sound truck for scientific recording purposes, we had

Save Money!



Just compare net costs to you! You can't beat AEROVOX prices.

And remember too the quality. These units stand up.

All due to use of HYVOL —the new super-dielectric oil.

DATA . . .

Latest AEROVOX catalog lists several new transmitting components. Ask your jobber or write us for copy.

600 to 3000 v. D.C. working.

1 to 4 mfd. Capacity.

Welded steel can. H.T. terminals. Leakproof.

AEROVOX CORPORATION
70 Washington St. Brooklyn, N.Y.
IN CANADA: AEROVOX CANADA, Limited Hamilton, Ont.

DO YOU WANT TO LEARN WIRELESS and TELEGRAPHY?



TWO BOOKS EVERY AMATEUR SHOULD HAVE—

Send Now

10¢ Each POSTPAID COIN, OR STAMPS

Hundreds of amateurs have learned from these books, so can you.

These books give you the fundamentals of wireless and telegraphy. They contain the codes and how to learn them. Mail your order now to:

SIGNAL ELECTRIC MFG. CO., Menominee, Michigan

ESTABLISHED 1892

SIGNAL

great difficulty with r.f. pickup coming in from a 1400-foot unshielded cable connecting a field amplifier of — 25 db output to the speech amplifier illustrated. We had expected, too, that this pickup could be eliminated by choice of band-stop or low pass filters inserted in the 500-ohm line. However, even such drastic methods would not stop the r.f. interference. Then the 6J7 pentode was installed in the amplifier and the trouble was cured completely. Furthermore, this almost phenomenal success has been duplicated by us with entirely different setups.

Cathode Coupled Driver for Class-B Modulators

(Continued from page 35)

preamplifier, employing, for instance, push-pull 6C5's, 56's, 76's, or their equivalent, as the final stage.

It is well to admit here and now that the drive delivered by the 6L6 to the 805's in this circuit possesses some harmonic content at high power levels, but this is so small that on voice amplification it is not noticeable to the ear, and shows up but slightly on a 'scope. This should not be misconstrued as a reflection on this economical drive system; many of the conventional plate-coupled drivers produce much more distortion.

The modulator, shown in Fig. 1, is so designed that it will work from any line having a level of + 14 to + 20 db, although it could be coupled directly to a low-level stage by use of an interstage transformer with a 3:1 step-up ratio. As previously mentioned, this type of driver is degenerative, and thus more voltage must appear from the grid of the 6L6 to ground than across the primary of the driver transformer T_2. This means that more voltage is usually needed at the grid of the 6L6 than could be obtained from a low-level stage. The 6L6 is operated with 400 volts on the plate and 300 volts on the screen.

A variable resistor is used in the cathode of the 6L6 tube. This is for adjusting the bias on the 6L6 (— 20 to — 22 volts). A jack for reading the plate current of the 6L6 (50 to 55 ma.) is also included so that the tube may be adjusted for maximum swing without overloading. This condition would be indicated by a shift in the plate current of the 6L6. Furthermore, the driver transformer used is of the variable-ratio type, which allows adjustment for best results and covers a wide range of ratios. Thus the constants of the circuit in which the 6L6 operates may be varied for optimum performance.

The best ratio, as found by the author, was a step-down ratio, primary to ½ secondary, of 1.30 to 1.0; that is, a step-up ratio, primary to total secondary, of 1:1.54—so that an r.m.s. grid voltage of 150 volts grid-to-grid at the 805's necessitates approximately 100 volts on the primary of the driver transformer, and approximately 120 volts to the grid of the 6L6—which boils down to approximately the original + 14 db level input, when transformed from the 500-ohm line.

Some Practical Aspects of Speech Amplifier Design

Considerations in Obtaining Wide Frequency Response and Low Hum Level

By Dana H. Bacon,* W1BZR

COMPARATIVELY little has been written on the practical problems encountered in the design and construction of a high-gain high-fidelity speech amplifier of the type required in the up-to-date amateur 'phone installation. The fundamental requirements of such an amplifier are, of course, well understood; briefly, it must have an input system built for a high-impedance microphone, an overall gain of about 125 db, and a flat frequency response from about 30 to 10,000 cycles. There must be sufficient power output to drive a good-sized modulator, if necessary, and hum level, distortion, etc., must be so low as not to be noticeable.

The average amateur has neither the time nor the laboratory facilities for doing the experimental work required and it is hoped, therefore, that the following discussion will be helpful to those who are confronted with the task of building an amplifier having the characteristics outlined above.

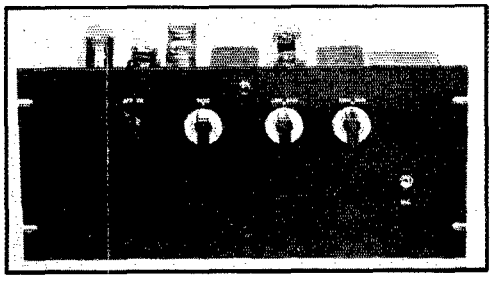

THE AMPLIFIER DISCUSSED IN THE TEXT

The right-hand gain control is for the microphone amplifier channel, while the one on the left controls the auxiliary low-gain channel, which is suitable for a phonograph pickup or similar comparatively high-level apparatus.

CHOOSING THE TUBES

The output requirements should first be considered. Class-B modulator tubes are now available which will deliver 500 or 600 watts of audio when operated Class-B with driving power of only 10 or 12 watts. If the speech amplifier will deliver 15, it will, therefore, be capable of handling a modulator which will work with a full kilowatt input to the Class-C r.f. stage.

Since most of the screen-grid tubes and pentodes are quite fussy as regards load impedance and since their plate impedances are high, making the Class-B coupling transformer quite critical in design, the obvious choice is low-impedance triodes, such as the 2A3's. Two of these tubes when operated in push-pull with fixed bias will deliver 15 watts with only about 2.5 per cent distortion. Inasmuch as the same tubes self-biased with a cathode resistor will deliver only 10 watts with 5 per cent distortion, it is well worth while to use a separate fixed bias supply, as shown in the schematic diagram, Fig. 1. Voltage for the half-wave rectifier is obtained from a tap on one side of the high-voltage secondary winding of the power transformer. A rectifier tube must be selected which will heat up as soon as the 2A3's, otherwise they would be damaged by lack of bias. Suitable economical rectifiers are not available, but the Type 26 has all the necessary requirements.

VOLTAGE AMPLIFIERS

A single Type 56 will drive 2A3's to full output without difficulty, and it remains, therefore, to obtain sufficient voltage amplification between the microphone and the grid of the 56. Unfortunately, this gain cannot be obtained in a single stage, even when using a screen-grid tube.

Perhaps before going farther it might be well to consider the input circuit. The conventional crystal microphone is built to work directly into the grid of the tube, the grid return of which usually consists of a 5-megohm resistor. The actual input capacity of a tube is not simply the grid to cathode capacity; due to the manner in which the tube functions, the grid-to-plate capacity, multiplied by the amplification of the tube, shows up as a capacity in parallel with the grid-to-cathode capacity. Suppose, for instance, a high-mu triode, such as the 6F5, is analyzed; the normal input capacity is listed as 6 $\mu\mu$fd., but the grid-to-plate capacity of 2 $\mu\mu$fd. multiplied by the voltage amplification, say 55, gives a total shunting effect of about 115 $\mu\mu$fd., and this would of course be sufficient to attenuate seriously the higher audio frequencies across the 5-megohm grid circuit.[1]

* 41 Bellington, Arlington, Mass.

[1] The extent of the high-frequency attenuation depends upon the type of device feeding into the amplifier; the crystal microphone, fortunately, is fairly tolerant in this respect because electrically its output circuit looks like a moderate-sized capacitance, and shunting additional capacitance across it does not change the frequency response to as great an extent as with other types of input devices.—EDITOR.

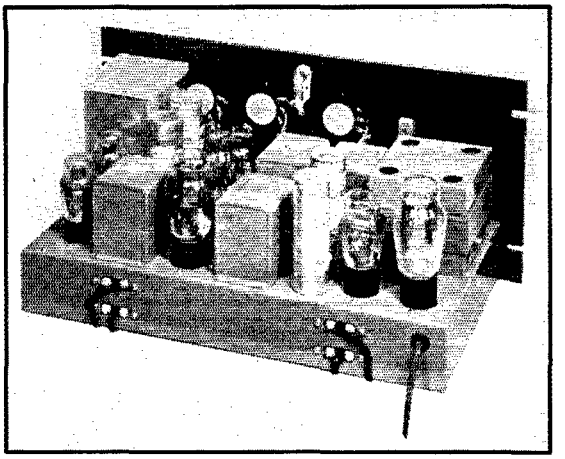

A TOP VIEW OF THE CHASSIS

The power transformer and rectifier tubes should be mounted as far as possible from the voltage amplifier stages. It is not necessary to shield the 83 rectifier.

It follows, therefore, that the best tube to use is one of the screen-grid type, since screen-grid tubes have such an extremely low grid-to-plate capacity that the shunting effect is negligible. The Type 57 is entirely satisfactory.

A 2A6 was chosen to fill in between the screen-grid input tube and the 56. Another 56 could have been used instead with about 10 db less gain, and this is satisfactory if the full 125 db gain is not required. The use of a high-mu triode in the second stage does not cause attenuation of high frequencies as it would in the first stage, since the impedance of the grid circuit is considerably lower. The diode plates are not used.

2.5-VOLT VS. 6.3-VOLT HEATERS

The reader may have wondered why 2.5-volt tubes were used instead of the 6.3-volt types. As a matter of fact, the first experimental models of the amplifier were built with the latter tubes, but it soon became apparent that the hum level was excessively high. Most of the hum was found to originate in the heater circuit of the input tube and of the many types tried the 6J7 was the best, being considerably better than the 6C6. A more thorough investigation showed, however, that there are two types of heaters used in the 6J7's. One of these is of a double-spiral construction which overcomes the hum problem pretty well but is subject to microphonism, while the other employs a folded heater wire with no provision for balancing out hum. The latter is, however, very good from the microphonic standpoint. Even when using the 6.3-volt tubes having the spiral heater, it is usually necessary to center-tap the heater winding carefully and run it at a potential of 10 to 40 volts positive with respect to the cathode in order to prevent electrons emitted from the heater itself from reaching the grid. (Point "X" in the schematic.) The situation is even more involved, however, since different tube manufacturers use different methods of heater construction and the dealers have no way of telling how any particular tube is built. All of these problems can be very easily avoided by using tubes with 2.5-volt heaters, since they are of uniform construction, and of the large number tested even the worst were considerably better than the average corresponding 6.3-volt type. Hum from the heater circuit is apt to be bothersome in the second stage as well as in the input, and although the effect is much less objectionable, substitution of a 2.5-volt type in this circuit position was a very definite improvement.

FREQUENCY CHARACTERISTIC

We come now to the choice of circuit elements and their effect on frequency response. The values shown in Fig. 1 are such that there is less than 1 db variation in gain between 25 and 10,000 cycles, and the gain at 20 cycles is down only two or three db. As a matter of fact, it is a fairly simple matter to obtain an excellent frequency characteristic; there are only three or four points that must be watched. Cathode bias resistor bypasses must be at least 20 μfd.; 8 or 10 is not enough. Furthermore, these condensers should be of the low-voltage type in order that they will maintain their characteristics at the low potential at which they are used. Coupling condensers between stages are not fussy; if the grid leak resistor is at least one-half megohm, a 0.1-μfd. condenser will be large enough. Units of 0.25 μfd. are available at approximately the same price, however, and may be used if desired.

The push-pull audio input transformer must be of good quality, and even the best transformer will be working at a disadvantage if the plate current of a tube is passed through its primary.

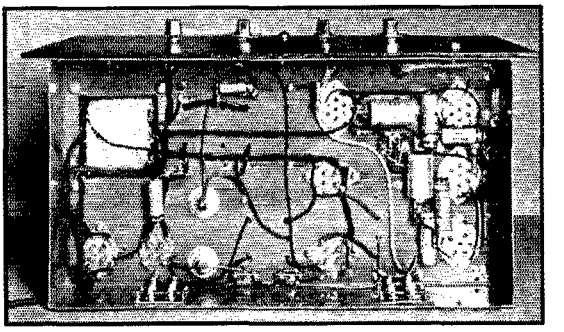

NOT MANY PARTS SHOWING HERE!

Careful layout and good workmanship are always worth while and make the complete job look much simpler than the schematic diagram would indicate.

The simple shunt-feed arrangement which supplies the plate of the 56 was found to be entirely satisfactory and with the particular transformer employed extended the lower frequency limit from 50 to 20 cycles. While it is customary to use a choke instead of a resistor for shunt-feeding the plate of a tube, the resistor is to be preferred in this particular circuit. Inasmuch as the 2A3 grids are never swung positive, the 56 is not called upon to deliver any appreciable power and it may be considered for all practical purposes as being a voltage amplifier. If a choke were used its reactance would have to be several times greater than that of the transformer primary in order to maintain amplification at low audio frequencies, but almost any resistor may be used and the fact that it *is* a resistor helps to flatten the frequency characteristic.

The transformer secondary should be balanced with respect to the primary, in order to obtain uniform high-frequency response. One of the inexpensive transformers that was tested had a secondary of conventional construction wherein one grid terminal was next to the primary and the other was at the outside end of the coil. This transformer had a rather peculiar characteristic since the end of the secondary that was nearest the primary had considerable shunt capacity which gave a dip in the frequency-response curve in the neighborhood of 6000 or 7000 cycles, while the outside end of the secondary contributed to a peak which showed up at about 10,000 cycles. While it would be possible to tune this peak to fill in the hollow, such practice is an unnecessary complication in view of the high-quality transformers that are available at reasonable prices.

STABILITY

Strangely enough, and very luckily, the same means used to obtain stability or freedom from motor-boating will, at the same time, minimize hum and improve the frequency characteristic. The plate circuits of the three low-level stages are each individually filtered with 20,000-ohm resistors and 8-μfd. condensers. These were found to be entirely adequate and will eliminate any trace of motor-boating. At the same time, they constitute extremely effective power-supply filters which prevent any ripple from the plate supply from reaching the signal circuits. Similarly, the 25-μfd. cathode by-pass condensers, in addition to their function of extending the low-frequency response of the amplifier, serve to remove any 60-

(Continued on page 108)

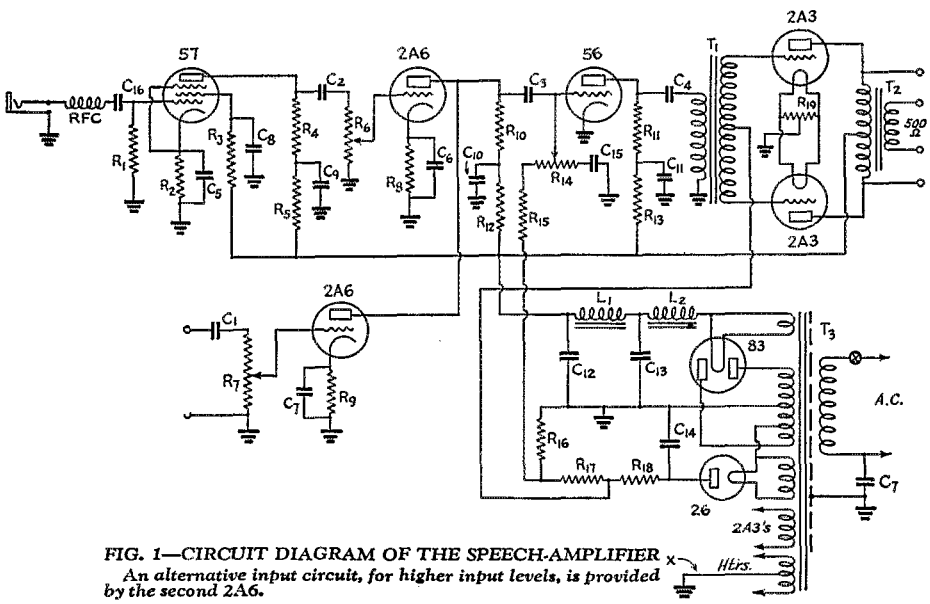

FIG. 1—CIRCUIT DIAGRAM OF THE SPEECH-AMPLIFIER
An alternative input circuit, for higher input levels, is provided by the second 2A6.

C_1, C_2, C_3, C_4—0.25-μfd. 400-volt paper.
C_5, C_6, C_7—25-μfd. 25-volt electrolytic (Aerovox MM25).
C_8—0.5-μfd. 400-volt paper.
C_9–C_{14}, inc.—8-μfd. 450-volt electrolytic.
C_{15}—0.005-μfd. 400-volt paper.
C_{16}, C_{17}—0.1-μfd. 400-volt paper
R_1—5 megohms, ½-watt.
R_2—1000 ohms, ½-watt.
R_3—1 megohm, ½-watt.
R_4—0.25 megohm, ½-watt.
R_5—0.1 megohm, ½-watt.
R_6, R_7—0.5-megohm volume control.
R_8, R_9—2500 ohms, ½-watt.
R_{10}, R_{11}—50,000 ohms, ½-watt.
R_{12}, R_{13}—20,000 ohms, ½-watt.
R_{14}—0.5-megohm volume control.
R_{15}—10,000 ohms, ½-watt.
R_{16}—2700 ohms, ½-watt.
R_{17}—11,000 ohms, ½-watt.
R_{18}—26,000 ohms, 1-watt.
R_{19}—10-ohm ct. (Yaxley).
T_1—Audio transformer, single-plate to push-pull grids (National HFI).
T_2—Class-AB output transformer, 2A3 plates to 500-ohm line (National HFO).
T_3—Power transformer, 400 volts each side c.t., with bias tap at 145 volts; with 5-volt, 1.5-volt and 2.5-volt windings (National HFA).
L_1, L_2—12 henrys, 125-ma. (National 80).
RFC—2.5-mh. r.f. choke.

quality above all

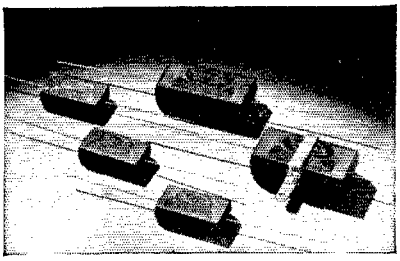

TYPE XB
Mica Transmitting Capacitor
WITH LEADS . . .

SOLAR

NOW, for the first time, high voltage mica condensers with convenient wire leads! Low-loss Bakelite; excellent r.f. characteristics; individually packaged.

Order through your jobber

SOLAR MFG. CORP.
599-601 Broadway New York, N. Y.

"PITC"—Pitcairn Island

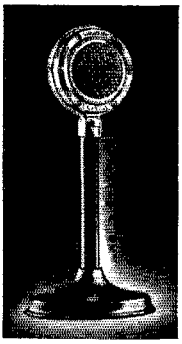

Goes on the Air with the SHURE 70SW "Communications-Type" Crystal Microphone

'Way out on this little isle in the South Seas, where atmospheric conditions are plenty tough, where the signals must get thru — clearly, intelligibly, consistently — the Voice of Pitcairn will talk to the world thru this famous Shure hi-efficiency "speech" microphone.

The MODEL 70SW, complete with desk stand and cable, lists at **$25**

Ask your Jobber or Write us for Catalog 144Q

HOLD IT . . . *in the Palm of your Hand*

New Shure "Military-Type" Hand Microphone! Small, light, compact. Optional locking press-to-talk switch. Carbon and Crystal types, in standard or "anti-noise" close-talking models.

List Prices.....$15 to $31.50

Shure Patents Pending; Licensed under patents of the Brush Development Company.

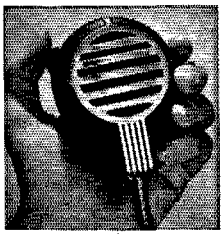

SHURE MICROPHONES & ACOUSTIC DEVICES
SHURE BROTHERS
225 W HURON ST, CHICAGO, U.S.A.
CABLE ADDRESS: SHUREMICRO

Speech Amplifier Design

(*Continued from page 14*)

cycle component that is picked up by the cathodes from the heaters.

It may seem peculiar that fixed bias was not used on all stages when a supply would be available simply by adding a few small resistors to the voltage-divider circuit in the output of the bias filter, especially since fixed bias would automatically eliminate the large-sized cathode condensers and hum troubles in the cathode circuits, the cathodes being grounded. It was found, however, that the additional filters required for each individual grid circuit with fixed bias were considerably more complicated than the cathode-biasing arrangement, particularly in the input stage; furthermore, the amplifier as a whole had a tendency to "squawk" as the tubes were warming up, or at the instant the a.c. switch was turned off.

HUM ELIMINATION

Even though all the precautions mentioned so far regarding hum elimination are carefully followed, it will probably be necessary to do some experimental work in order to reduce the hum to the lowest possible level. The best way to attack the hum elimination problem is to start with the output stage, all other tubes being removed from the circuit. The 2A3's must be approximately balanced in their characteristics, and even so it is desirable in some cases to have a variable center-tapped resistor across the filament circuit so that the point which gives minimum hum can be easily found. This adjustment should be made with the 2A3 grids connected together (the push-pull input transformer secondary shorted). Then, remove the short and if the hum level increases twist the transformer around on the chassis until the point of minimum pickup is found. During this test, the primary should be open.

Next, proceed to the 56 stage and check the plate filter, bias supply leads, etc., for possible sources of hum. Work back in this manner until the input stage is reached, for it is here that most of the hum troubles originate and it will be quite impossible to overcome them effectively if there are other sources of hum in the following stages. The reason for this is that the hums introduced at different circuit points will not add up in phase and it is quite possible, therefore, that an experimental circuit change that actually increases hum in one portion of the circuit will tend to buck out hum in the output. Such a condition is most unsatisfactory. If this bucking out action is allowed, the hum level will vary with the setting of the gain control, tone control, etc., and the residual hum level cannot be reduced to the absolute minimum. Furthermore, fundamental hum frequencies may buck each other while harmonics may add.

Several special precautions must be taken in wiring the input stage; the tube and all circuit elements associated with the grid and cathode must be completely shielded; this includes the microphone jack, coupling condenser, r.f. choke,

QST

YEARLY BINDERS

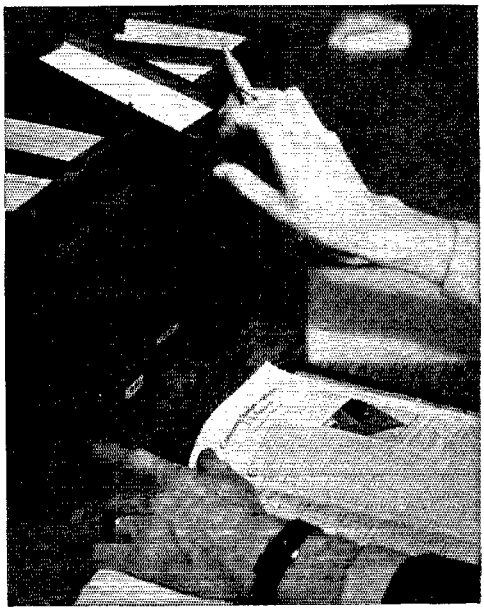

THOSE who take pride in the appearance of their lay-out and wish to keep their reference file of *QST*'s in a presentable manner, appreciate the *QST* binder. It is stiff-covered, finished in beautiful and practical maroon fabrikoid. Cleverly designed to take each issue as received and hold it firmly without mutilation, it permits removal of any desired issue without disturbing the rest of the file. It accommodates 12 copies of *QST* and the yearly index. Opens flat at any page of any issue.

With each Binder is furnished a sheet of gold and black gummed labels for years 1919 through 1938. The proper one can be cut from the sheet and pasted in the space provided for it on the back of the binder.

A file of several years of *QST*, kept in order in binders, is a most valuable reference library for any Radio Amateur.

Price **$1.50** *postpaid*

Available only in United States and possessions, and Canada.

THE AMERICAN RADIO RELAY LEAGUE
West Hartford, Conn.

grid leak, cathode resistor, and cathode resistor by-pass. All these parts can be conveniently mounted in a rectangular shield can, as shown in the photographs. The common ground point of the cathode resistor and by-pass condenser, the microphone jack, and the grid leak must be inside the shield and if the input stage, as a whole, is fairly close to the power transformer, this grounding point must be selected experimentally with considerable care.

The shield compartment itself must be solidly grounded to the chassis and should not touch the front panel or cabinet, as any such connection may cause circulating currents in the shield which will, in turn, introduce objectionable hum or r.f. feed-back.

The gain control must be of the non-inductive type and its leads must be completely shielded.

TONE CONTROL

Reference to the circuit diagram will show a tone control connected in the grid circuit of the 56 tube. This control is of the type that will attenuate either the high- or the low-audio frequencies. Little need be said concerning the action of the control since it is quite conventional in its operation. It constitutes, however, a worth-while addition to the amplifier since it may be used to compensate to some extent for peaks in the high frequency range of the microphone or, on the other hand, to weaken the bass voice frequencies and by so doing to effect a much higher level of modulation on frequencies in the middle range which are most necessary from the standpoint of intelligibility.

R.F. FEEDBACK

The problem of eliminating r.f. feedback is very easy to solve; in fact, there will be no problem if filtering and shielding technique, as employed in receiver construction, is applied to the speech amplifier. The amplifier as a whole should be completely shielded. All external leads; i.e., the microphone cable, the a.c. supply cord, and the output leads, either must be well filtered or thoroughly shielded. In the case of the a.c. cord, a 0.1-ufd. condenser connected from one side of the line to the chassis will suffice. In addition, the power transformer should have an electrostatic shield to separate the primary from the other windings. The output circuit, being of fairly low impedance (not over 5000 ohms), can be bypassed to chassis with small mica condensers, although this will not be necessary unless the r.f. field around the equipment is exceptionally strong.

CONCLUSION

Equipment built in accordance with the above suggestions will constitute a complete and self-contained unit which may be used with almost any microphone pickup, loud speaker, or transmitter. An amplifier of this type does not become obsolete and it is a worth-while addition to any radio shack, even though it may sink to the level of being used for p.a. work!

A Peak-Limiting Amplifier for Amateur Use

Increasing Communication Efficiency and Preventing Over-Modulation by Speech-Compression

BY ROBERT MACFARLAND,* W5BKS

A DEVICE for preventing over-modulation is a valuable asset to any amateur station. If this same device will allow an increase in average modulation of 3 or 4 db, then the device is still more valuable (and attractive!) to the amateur.

Numerous schemes have been proposed for preventing over-modulation, and a number of peak-limiting amplifier circuits have been suggested, but the peak-limiting amplifier to be described performs better than anything previously tried at W5BKS. It will give an increase of at least 3 db in average modulation which, in the words of broadcast equipment manufacturers, is as good as doubling the carrier power without peak-limiting.

* 1325 N.E. 15th St., Oklahoma City, Okla.

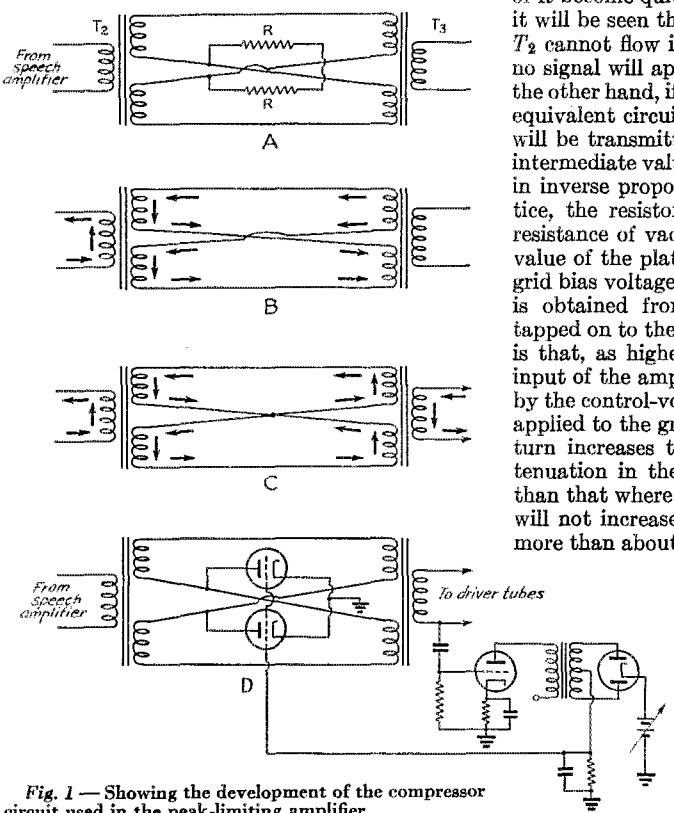

Fig. 1 — Showing the development of the compressor circuit used in the peak-limiting amplifier.

When transformers connected as at A have current induced in the secondary of T_2, no current will flow in T_3 if R is high. This can be seen readily by following the current flow in B. However, when the value of R becomes low, the circuit changes over into that shown at C, and current can flow in T_3. In practice, the resistors are replaced by the plate resistance of vacuum tubes, and bias for the tubes is obtained from an amplifier-rectifier system, as in D.

The system used is relatively simple. If two transformers are connected as in Fig. 1-A, the equivalent circuit will be as at B when the values of R become quite high. By following the arrows, it will be seen that any audio current induced in T_2 cannot flow in transformer T_3, and therefore no signal will appear in the secondary of T_3. On the other hand, if R becomes a very low value, the equivalent circuit will be as at C, and the signal will be transmitted with no appreciable loss. At intermediate values of R, the signal passed will be in inverse proportion to the resistance. In practice, the resistors R are replaced by the plate resistance of vacuum tubes, as in Fig. 1-D. The value of the plate resistance is controlled by the grid bias voltage, and this bias or control voltage is obtained from an amplifier-rectifier system tapped on to the secondary of T_3. The net result is that, as higher audio input is applied to the input of the amplifier, more voltage is developed by the control-voltage amplifier-rectifier tube and applied to the grids of the control tube, which in turn increases the plate resistance and the attenuation in the control circuit. Inputs greater than that where compression starts to take place will not increase the output of the amplifier by more than about 2 db. A variable bias control on the control-voltage rectifier sets the point at which the diode starts rectifying and thus the point at which compression starts to take place. The output of the amplifier is controlled by a volume control placed after the compressor circuit.

Reference to the complete circuit in Fig. 2 will show how the compressor is incorporated in a speech amplifier of typical design.

Adjustment

It might be wise to use a loud speaker for the amplifier load until the preliminary adjustments have been completed. If an audio oscillator and a volume indicator are available, no trouble in ad-

Perhaps you have no interest in a story on a simple way to keep your modulation up to nearly 100 per cent all of the time without running the risk of over-modulation. But knowing that the same article tells you how to put out a consistently stronger 'phone signal for the same carrier power might change your mind.

justment should be encountered. Otherwise one's own judgment must be used as to how much compression is employed.

Feed an audio signal to the input of the amplifier and, with R_{11} in its maximum resistance position, remove the 6N7 control tube from its socket. There should be a sharp drop in output from the amplifier. The resistance of R_{23}, R_{24}, R_{25} and R_{26} may have to be increased to 500,000 ohms or 750,000 ohms in order to get the proper control range in the compressor network.

With the control tube back in its socket, slowly turn the control R_{11} toward minimum resistance. A point will be found where the reading of the meter in the cathode circuit of the control tube starts to decrease. This is the point where peak-limiting or compression is just starting to take place. Now you should be able to increase the input level to the amplifier approximately 5 db with only about 2 db increase in output from the amplifier, showing that the audio signal is being compressed about 3 db. The reading of the meter in the 6N7 cathode should be noted, or a mark made on the scale to show where the meter swings to with this 3 db compression. The input to the

(Continued on page 114)

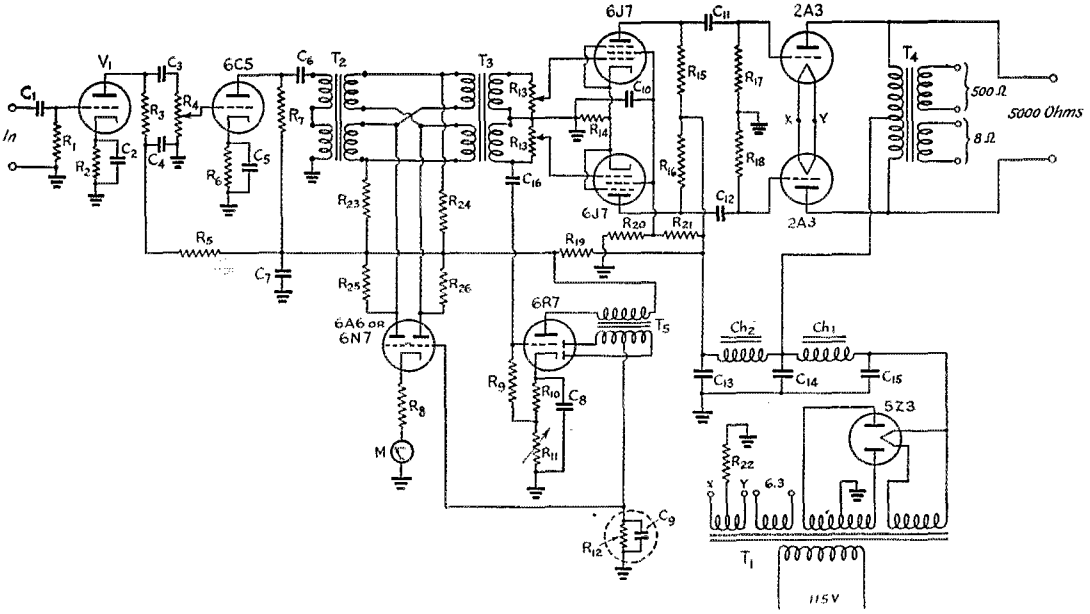

Fig. 2 — The peak-limiting amplifier.

C_1, C_3, C_6, C_{11}, C_{12}, C_{16} — 0.1 μfd., 600-volt.
C_2, C_5 — 20 μfd., 25-volt.
C_4, C_7, C_{13}, C_{14}, C_{15} — 8 μfd., 475-volt electrolytic.
C_8, C_{10} — 0.5 μfd., 400-volt.
C_9 — 0.1 μfd. (See text.)
R_1 — 3 megohms.
R_2 — 8000 ohms for 6R7 tube, 4000 ohms for 6Q7.
R_3 — 250,000 ohms.
R_4 — 500,000-ohm volume control.
R_5 — 50,000 ohms.
R_6 — 5000 ohms.
R_7 — 100,000 ohms.
R_8 — 500 ohms.
R_9 — 750,000 ohms.
R_{10} — 2000 ohms.
R_{11} — 20,000-ohm volume control.
R_{12} — 500,000 ohms. (See text.)
R_{13} — 500,000-ohm dual volume control.
R_{14} — 1200 ohms.
R_{15}, R_{16} — 250,000 ohms.
R_{17}, R_{18} — 500,000 ohms.
R_{19} — 10,000 ohms.
R_{20} — 25,000 ohms.
R_{21} — 250,000 ohms.
R_{22} — 750 ohms, 20-watt.
R_{23}, R_{24}, R_{25}, R_{26} — 250,000 ohms. (See text.)
All above are one-watt, with exception of R_{22}.
CH_1 — 12-henry, 150 ma.
CH_2 — 30-henry, 80 ma.
V_1 — 6R7 if high-output microphone is used. 6Q7 if low-output microphone is used.
T_1 — Power transformer to deliver 360 volts at 150 ma. through filter.
T_2, T_3 — Push-pull interstage transformers, with two-section secondaries. T_3 is worked backward.
T_4 — Output transformer for 2A3 tubes. The two plates of the 2A3 tubes go to the driver transformer primary when the amplifier is used to drive a modulator. The center tap of the driver transformer need not be connected to the amplifier.
T_5 — Push-pull input transformer, 3-to-1 ratio.
M — 0–5 milliammeter.

THE
NEW KEYING Grid Control
RECTIFIER



PRICE
$3.50

Key your rig the modern electronic way with this worthy companion of the famous UNITED 866. Put out a signal that does justice to your fist, by eliminating *tails* and *chirps*.

FILAMENT . . .	2.5 volts;	5 amps.
PLATE CURRENT (average)		.25 amps.
PLATE CURRENT (peak)		1.00 amp.

Your dealer has them or we will ship to you

UNITED ELECTRONICS CO.
42 SPRING STREET . NEWARK, NEW JERSEY

STACO *Antenna*
CHANGE-OVER RELAYS

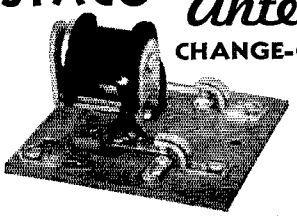

- *Mycalex Insulation*
- *4 Ampere Contacts*
- *Ball-Bearing Pivot*
- *Shorter R.F. Path*
- *No AC Chatter*
- *Floating Armature*

Type ABA. XPLW Insulation, 110v, AC
Type ABD. XPLW Insulation, 6v, DC } **$3.00 net**
Type AMA. MYCALEX Insulation, 110v, AC
Type AMD. MYCALEX Insulation, 6v, DC } **$4.50 net**

See Your Jobber or Write for Details

STANDARD ELECTRICAL PRODUCTS COMPANY
316 Sibley Street St. Paul, Minnesota

SEND FOR FREE
ANTENNA BOOKLET

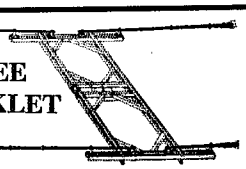

Over 30 new ideas and diagrams for erection and feeding of Rotary and Vertical Antennas — the first to be published. Ask your jobber or write

PREMAX PRODUCTS
DIV. CHISHOLM-RYDER CO., INC.
3919 HIGHLAND NIAGARA FALLS, N. Y.

thing for a beginner to cut his teeth on. The procedure is to resign yourself to the idea that you will eventually get it done, and plug along. If each stage is tested beforehand, there is no reason to worry that the completed super might not work.

Whether all the time invested is worth while depends on the satisfaction one derives from shop work and from the use of his own equipment. Knowing every inch of his set, the builder will be more able to keep it at peak performance. Then, too, he will not be afraid to dive into it to make an alteration, if that alteration may bring about an improvement.

A Peak-Limiting Amplifier

(*Continued from page 37*)

amplifier can now be increased above the point where compression starts to take place, by 10 or 15 db, and the output from the amplifier will only increase approximately 2 db. The circuit will take care of any unexpected peaks, but too much compression should not be used in normal use as it will result in unnaturalness of speech, if not in actual distortion.

A word about the resistor-condenser combination R_{12}-C_9. The capacity of the condenser determines the speed with which compression starts to take place, while both the resistance and capacity determine the time it takes for the circuit to return to normal gain, since the condenser must discharge through the resistor. The values shown proved satisfactory in our case, but some cut-and-try might be in order. Some commercial equipment uses as much as 0.25 μfd. or 0.5 μfd. at C_9, but this proved too slow for our work.

One point to remember is not to work the compressor circuit at too high an audio level. If you use triode tubes following the compressor network, it will probably take at least three stages of amplification to get the proper output.

The peak-limiting circuit described was incorporated in an existing amplifier and added practically no distortion. Tests made with an RCA 68-A beat frequency oscillator and 69-A distortion meter showed the average distortion between 100 and 5000 cycles to be only 4 per cent, and only 6 per cent at 70 and 6500 cycles. These checks were made with from 3 to 4 db compression, and indicate less than 2 per cent increase in distortion with the introduction of the compression. The p.p. 6J7 stage seems to contribute the major portion of the distortion, but no attempt was made to decrease the distortion since the quality sounds quite good on the air.

To sum up the advantages of the amplifier:

(1) Properly adjusted, it will prevent overmodulation. In fact, R_{13} can be adjusted for any modulation percentage you desire.

(2) It will increase the average modulation by at least 3 db and, under some conditions, 5 or 6 db compression could be used. The greater compression will help to over-ride QRM.

(3) The possibility of arc-overs in the transmitter is reduced by preventing excessive drive to the modulators. This is particularly useful when the margin of safety is quite small.

Volume Compression Simplified

A Speech Amplifier-Compressor with Novel Features

BY W. C. LAMB, JR.,* W6OGC

THE present interest in methods of raising the average percentage of modulation, as well as limiting the peak output of audio equipment, has led the author to present a speech amplifier based upon the practical considerations that prevail in amateur 'phone work.

As a result of previous work with low-level audio equipment which was used in strong a.c. and r.f. fields, a design which eliminated transformers and chokes, especially in the low-level stages, was evolved. The entire unit, consisting of power supply, speech amplifier, and compressor, was built on a single 8 × 12 × 2½ chassis. A little thought devoted to placement of parts, keeping the audio and power transformers at opposite ends of the chassis, and making the input stage leads as short as possible, was more than compensated for by the excellent results obtained.

The first two stages are both pentode-connected. The new 6SK7 and 6SJ7 tubes have ideal characteristics for this purpose, first by providing the necessary gain to drive, from a crystal mike, a 6C5 as an impedance transformer, and second, in the fact that all connections are brought out to the base pins, making for short leads and neat construction.

The 6C5, operating as a cathode follower,[1] provides low-impedance (500-ohm) output. This allows the speech unit to be placed on the operating table where its gain and compression controls are convenient, and keeps the low-level audio equipment out of the strong a.c. and r.f. fields of the transmitter. A line of any desirable length couples the speech amplifier-compressor to the driver stage of the modulator unit.

The heart of this little speech amplifier is the compressor. Its simplicity is only exceeded by the excellent results obtained. A 6H6 is used as a

* 3351 Perlita Ave., Los Angeles, Cal.

[1] The term "cathode follower" is applied to a tube with the load in its cathode circuit when the load resistance appears in the following stage. Note that the d.c. cathode circuit must be completed through the line. Ordinarily the cathode follower is used as a step-down impedance transformer, forming a convenient method of working from a very high to a very low impedance, where actual transformers would not be satisfactory. — EDITOR.

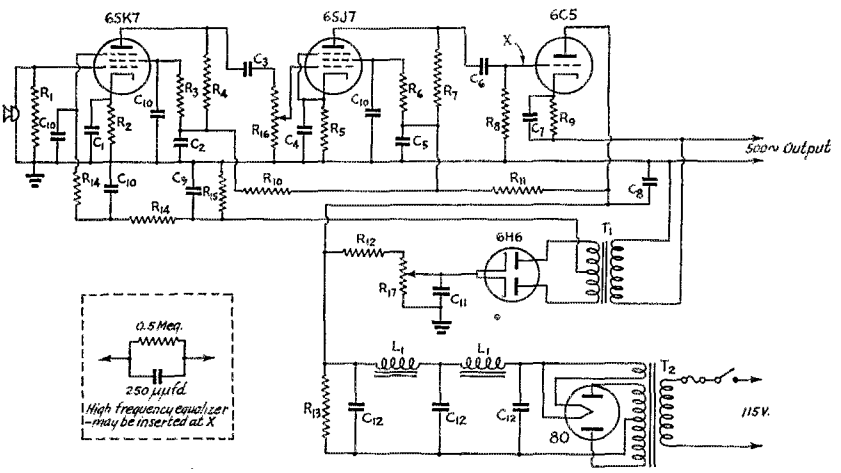

Fig. 1 — Circuit of the speech amplifier-compressor.

C_1, C_4, C_7 — 25-μfd., 25-volt electrolytic.
C_2, C_8 — 4-μfd., 450-volt electrolytic.
C_3, C_6 — 0.05-μfd. paper.
C_8 — 0.5-μfd. paper.
C_9, C_{10}, C_{11} — 0.1-μfd. paper.
C_{12} — 8-μfd., 450-volt electrolytic.
R_1, R_8 — 0.5 megohm.
R_2, R_5 — 1250 ohms.
R_3, R_6 — 2 megohms.
R_4, R_7 — 0.25 megohm.
R_9 — 1000 ohms.
R_{10}, R_{11} — 25,000 ohms.
R_{12} — 0.1 megohm.
R_{13} — 25,000 ohms, 10-watt.
R_{14}, R_{15} — 0.25 megohm.
R_{16} — 0.5-megohm potentiometer (gain control).
R_{17} — 25,000-ohm potentiometer (compression control).
T_1 — Interstage audio transformer, single plate to push-pull grids.
T_2 — Power transformer, 600 volts c.t., 5-v. and 6.3-v. filament windings.
L_1 — Filter chokes, 15 henrys, 85 ma.

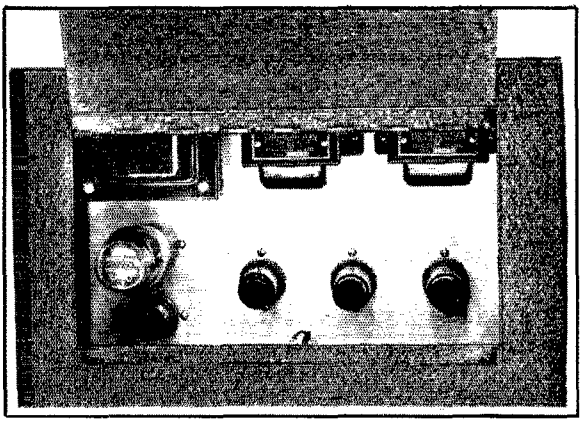

This glimpse inside the amplifier-compressor built by the author shows the simplicity of the arrangement. The unit is for use on the operating table, has 500-ohm output for working into a remote pair of 2A3 drivers. There is ample gain for a crystal microphone.

full-wave audio rectifier, its plates being fed by the secondary of an ordinary plate-to-push-pull-grid audio transformer, the plate winding or primary being connected across the output of the speech unit. A positive bias on the cathode of the 6H6, controlled from the front panel by potentiometer R_{17}, determines the point at which compression starts. A simple resistance-capacity filter removes the audio component, and a varying d.c. voltage is impressed on the suppressor grid of the input tube of the amplifier. The manual compressor control on the front panel controls the positive delay voltage on the 6H6. With a variation from zero voltage to 30 volts positive on the 6H6 cathode, any desired range of compression may be obtained. With the control bias of the 6H6 at 30 volts positive there is little or no compression, and upon reducing this bias to zero compression starts immediately at any signal input to the amplifier; thus by using intermediate bias values compression may be made to start at any desired input level.

The simple *RC* filter network in the d.c. line to the 6SK7 suppressor is sufficient to prevent audio feed-back and still does not introduce appreciable lag, insofar as limiting peaks that would cause overmodulation and splatter is concerned.

Using the constants as shown in Fig. 1, a few words as to the practicability of the unit are in order. The unit is now installed as a speech amplifier-compressor to drive a pair of 2A3 triodes which, in turn, drive a pair of RK52 zero-bias tubes to maximum rated output, 250 watts average audio power. All reports received to date have been very complimentary as to quality and high average level of signal.

The resistor and condenser in the dashed enclosure in Fig. 1 constitute a simple equalizer for raising the gain at the higher audio frequencies, which is, of course, desirable for amateur 'phone work. The equalizer may be inserted in series with the grid of the 6C5, as indicated by

(Continued on page 98)

This is just about as simple a scheme for adding volume compression to a speech amplifier as any we've heard about. If you already have a speech amplifier and don't want to build a new one, the compressor circuit alone can be adapted readily to it, the only proviso being that the input stage should use a pentode. Why not give your average modulation a boost and at the same time reduce the possibility of overmodulation?



DIXIE JONES' OWL JUICE

THIS here Squinch Owl is figgerin' on startin' a movement to take up a collection of ten cents per each from all the school younguns in the Country to git together some munny to start a lobby to see can we git a law passed to make these guys that think up the size of building lots to not be so dern stingy and make 'em big enuf so's a ham can git up a 80 meter antenny on 'em, and while I'm at it I might as well make 'em plant a tree at both ends to hang same on. It's a doggone sin and a shame that perfectly good hams that vote right, go to chirch reglar, take a bath ever Saturday, eat with thair fork, pay thair dets, tote back stuff they borry, and always willin' to mind the baby on thair wife's night out, and they hafto go threw life as 40-meter jaspers and are denied the boon of assoshiatin' with us gentlemens on 80.

— *W4IR of the Dixie "Squinch Owl"*

Now . . .

AUTOMATIC VOLTAGE REGULATION

. . . too!

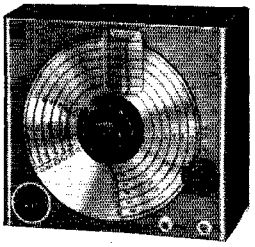

MANY hundreds of the new GUTHMAN U10 Frequency Meter-Monitors are today enabling their owners to comply with the law requiring regular transmitter frequency measurement, and to "pre-spot" new QSO's so they can be tuned in again during receiver warm-up periods without customary annoying fishing. To mention but two cases out of many, WCFL's W9FI uses a U10 to check its ultra high frequency transmitter, while W6USA at the Golden Gate Exposition uses a U10 to check frequency of its five transmitters.

But now the U10 is further improved by inclusion of socket for a VR9O automatic voltage regulator tube, which does a nice job of compensating for voltage changes when transmitter is keyed or modulated and both are on the same (usually heavily loaded) power line. This automatic voltage regulation provision is now included at no extra charge, and full data on how to incorporate it into U10's now in use can be had for a postcard giving serial number. (Address Dep't Q5). The same postcard will also bring free six individual large size calibration curves for all amateur bands from 5 thru 160 meters.

And thanks a lot for the FB response on the new GUTHMAN U17 Communication Receiver Kit . . . we've been flooded with inquiries and are glad to advise that U17's are now on display at all GUTHMAN jobbers.

EDWIN I. *Guthman* & CO., INC.

400 S. PEORIA ST. CHICAGO, U. S. A.

CABLE ADDRESS: GUTHCO-CHICAGO

RADIO

ENGINEERING, broadcasting, aviation and police radio, servicing, marine radio telegraphy and telephony, Morse telegraphy and railway accounting taught thoroughly. 48 weeks' engineering course, equivalent to three years of college radio work. School established 1874. All expenses low. Catalog free.
DODGE'S INSTITUTE, Day Street, Valparaiso, Indiana

BUILD A LOW COST MONITOR

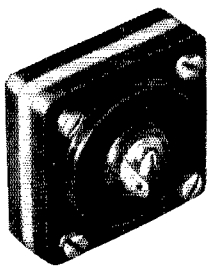

A dual-frequency crystal calibrator and your receiver makes an accurate inexpensive frequency monitor. January *QST* or Bulletin E-7 (free) gives constructional details.

BLILEY SMC 100
DUAL FREQUENCY CRYSTAL

Naval Communication Reserve Notes

(Continued from page 52)

mander representing the Admiral and his organization and the Unit Commander the Captain and the ship's organization. A great deal of the regular routine business of both Section and Unit is handled over the two circuits in preference to handling it by written memorandum. The radiomen thus see useful traffic in messages which they can recognize as having a purpose as against abstract test messages which lack element or interest and which, furthermore, are too easy to make up to offer much practical training in this important phase of Naval Communication.

On board ship, the functions of the Flag and the ship organizations take place out of sight of the men in the radio room, those offices being located in other parts of the ship. Here, however, all these activities are within the plain view of the men and a good conception of Naval Communication as a whole as well as in its details is had by them. There is an atmosphere of reality about operations which is very desirable.

On Armory drill nights Naval Procedure is discussed and studied by use of the practice table fitted with a key for each chair, all keys are in parallel and operate the audio-frequency oscillator and loud speaker. Some time on these nights is devoted to military drill and seamanship.

Volume Compression

(Continued from page 59)

the "X," and its addition to the unit has proved quite beneficial.

The 6H6 and its associated transformer and *RC* filter are so easily adapted to other circuits that their addition to any existing speech amplifier is very simple, and is heartily recommended. Connecting the primary of the push-pull transformer across a high-level point in the audio system, rectifying the audio voltage developed across its secondary with the 6H6, and feeding this rectified voltage through the *RC* filter to the input stage of the speech equipment, is indeed a simple way to hold down the peaks and, at the same time, raise the average percentage of modulation.

Strays

RCA announces a new booklet on receiving tube characteristics (No. 1275-B) covering 191 different types, including glass, glass-octal, GT and metal types. A copy may be obtained from any local RCA distributor or, upon request, from Commercial Engineering Section, RCA Manufacturing Co., Inc., Harrison, N. J.

—•••—

Weston recently announced a converter kit which extends the range of 20,000-ohms-per-volt analyzers to 5000 volts for television-receiver servicing. The kit includes a pair of specially insulated test prods. These test prods should go well in transmitter servicing.

The Design of Speech Amplifiers

BY PAUL E. MILLINGTON,* W9KSW, AND DOUGLAS W. FATH,** W9UST

THE speech amplifier of the modern amateur radio-telephone transmitter consists of the voltage amplifiers in the audio channel between the microphone and the grid or grids of the driver stage, although many amateurs also include the driver stage within the meaning of the term. With the possible exception of the drivers, which often must deliver considerable power, each of the stages in any such amplifier should operate Class-A, which means that the grids are not usually driven positive and that the plate current remains constant under all conditions. Class-A

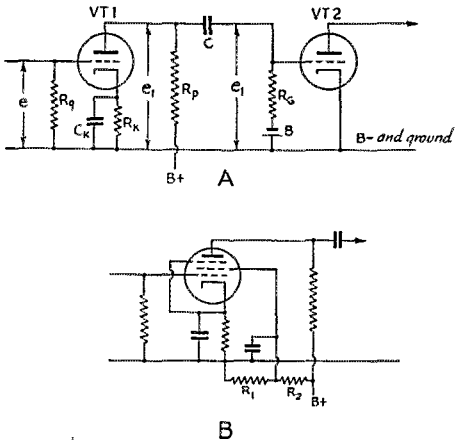

Fig. 1 — The fundamental circuit of a Class-A amplifier using triode tubes is shown at A. The necessary modification for a pentode tube is given at B.

amplifiers give low distortion and high gain but rather poor plate efficiency.

The two most popular methods of connecting Class-A tubes are by means of resistance coupling and transformer coupling. These alone will be considered at this time, in the order named and with particular emphasis upon the first.

Resistance Coupling

The circuit of an audio voltage amplifier, resistance coupled to another, is given in Fig. 1-A, using triodes with indirectly heated cathodes. Tubes such as the 56, 76, 6C5 or 6F5 are of this type. A signal voltage "e" is developed by the microphone between grid and B— of the first tube across R_g. The cathode is maintained positive with respect to ground by the flow of current through R_k and hence positive with respect to the grid, which is another way of saying that the grid is negative with respect to the cathode. The value of R_k is usually given among the operating data on the tube, or it can be easily calculated from the recommended operating voltages and current. A large cathode by-pass condenser, C_k, provides a low-impedance path from cathode to ground for audio voltages. The plate current of VT1 flows through R_k and causes an appreciable audio voltage to appear between cathode and ground unless the resistor is well by-passed. Since any audio voltage between cathode and ground caused by the plate current flow is, in its effect on the grid, in the opposite direction to the signal voltage, it tends to cancel the effect of the signal and hence the amplification of the stage. If too small a cathode by-pass condenser is used, the amplification will fall off at the lower frequencies. To avoid the use of R_k and C_k, one or more small bias cells, B, may be inserted between R_g and B— or ground to maintain the grid properly negative, as in the case with VT2.

R_p is the series plate load resistor which offers high impedance to the amplified audio voltages, e_1. The amplified audio output voltages, e_1, appearing across R_p are fed to the next grid through a coupling condenser C. The function of this condenser is to block off the high d.c. voltage of the plate of the first tube from the grid of the second while simultaneously transferring the alternating audio voltages from the one to the other. R_g is the grid resistor of the second vacuum tube, VT2, across which the voltage e_1 now appears. No flow of direct current occurs through this resistor and hence the resistor in itself has a negligible effect upon the bias of the tube. The constant bias voltage may be secured from bias cells as shown, or by means of the R_k-C_k combination of VT1.

Many suitable triode tubes are available for audio amplifier work, although pentodes are often used as triodes by tying the proper electrodes together. For example, the 57, 58, 6C6, 6D6 and 6J7 pentode tubes readily become medium-μ triodes if the suppressor and screen grids are connected to the plate. The correct connections for triode operation with other multi-grid tubes are usually suggested in their data when the tubes are suitable for this sort of service.

Pentodes are often used in the first stage of speech amplifiers, particularly with low level input, because of their greater voltage gain. They

* University Extension Division, 623 West State St., Milwaukee, Wis.
** 2606 North 54th St., Milwaukee, Wis.

If you're building or trouble-shooting a speech amplifier, it's always well to know the "whys" of Class-A amplifier operation. Here's a non-mathematical explanation of those of most interest and practical use.

are not generally used following high-gain pentode stages because the high amplifications often cause instability in the amplifier. A typical Class-A pentode is given in Fig. 1-B, in which the suppressor is tied to the cathode (or to ground), the screen being maintained at a fairly low positive potential from a tap on the d.c. voltage divider R_1R_2 across the plate supply. Incidentally, to emphasize an oft-repeated point, the screen voltage must never be too high, otherwise the stage may oscillate, rendering it more or less completely inoperative. R_1 is usually 50,000 ohms, R_2 100,000 or 200,000 ohms. The screen is by-passed to B— with an electrolytic condenser to provide a low impedance return for amplified audio voltages. That is, as far as audio voltages are concerned, the screen must be at zero potential.

Bias cells for control-grid bias may be used to particular advantage with pentodes, since usually only one or two cells are necessary.

The amplification of resistance-coupled amplifiers varies with frequency, being greatest with those frequencies in the intermediate ranges, falling off more or less sharply in both the low and high portions of the audio spectrum. Over the intermediate frequencies, the amplification is essentially constant. The maximum amplification that can be expected with a triode-connected resistance-coupled stage is about 7 per cent of the amplification factor, or μ, of the tube. The familiar 56 and 76 will thus each give a maximum practical amplification of only 9 or 10 per stage, corresponding to a gain of about 20 db, while some of the newer tubes, such as the 6C5 and 6F5, are much more effective in this respect. The 58, 6C6, 6D6 and 6J7, acting as medium-μ triodes, have effective amplifications varying from 13 to 14 (23 db) per stage. A pentode, however, may give a maximum amplification of approximately 8 per cent of its μ. Thus the 57, 6C6 and 6J7, connected as suggested in Fig. 1-B, will each yield a rather conservatively estimated voltage gain of 100, corresponding to 40 db.

The overall amplification and the amplification at low and high frequencies vary considerably with the circuit constants. Increasing the value of the grid resistor to one or two megohms increases the maximum amplification, at the same time favorably affecting the low-frequency response from 30 cycles upward. The electrolytic cathode condenser affects favorably the low frequency response if its capacity is large, as previously pointed out. Except for the by-passing of 60-cycle ripple, however, practical results do not justify capacities much beyond 4 μfd., although capacities from 10 to 25 μfd. are often used, since the condensers are not expensive in the low-voltage ranges. Increasing the coupling resistance, R_p, decreases the high-frequency response and increases the gain. The advantages are not particularly marked unless the high values of R_p are accompanied by high plate supply voltages, due to the considerable d.c. voltage drop across the resistor. The practical effect of a change in the desired direction with ordinary power supplies is limited to values of R_p two or three times the plate resistance characteristic of the tube itself, which may be ascertained from the tube data. The capacity of the coupling condenser C has a very direct bearing upon the amplification at low frequencies, where its reactance is greatest. Capacities beyond 0.1 are scarcely necessary, however; usually 0.05 μfd. is ample to extend the frequency response to 40 or 50 cycles, and 0.02 μfd. is often used where extreme low frequency response is not essential. The effect on the intermediate and high frequencies is negligible with

(Continued on page 112)

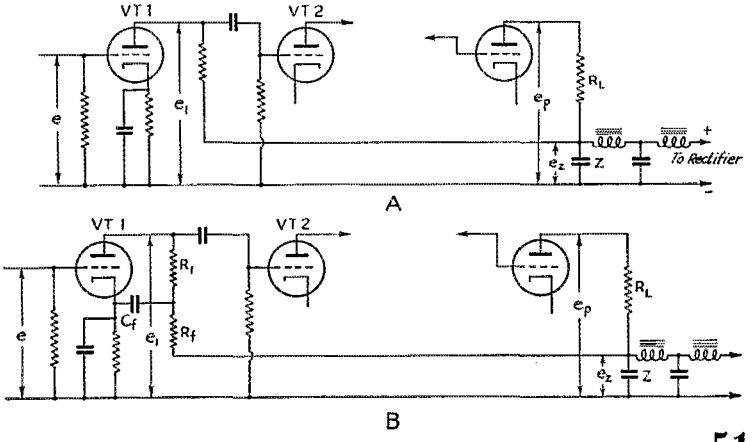

Fig. 2 — The plate supply furnishes the common impedance responsible for feed-back in an amplifier. Addition of the filter shown in B is the usual preventative or cure.

THE A.R.R.L.
ANTENNA BOOK
HAS WHATEVER YOU WANT!
Chapters:
1. Wave Propagation
2. Antenna Fundamentals
3. Ground Effects
4. Feeder Systems
5. Half-Wave Antennas
6. Long Single Wires
7. Multiband Antennas
8. Driven Arrays
9. Parasitic Arrays
10. "V" Antennas
11. Rhombic Antennas
12. Antennas for 160 Meters
13. U.H.F. Antennas
14. Special Antenna Systems
15. Finding Directions
16. Supports and Construction
17. Rotating Mechanisms
18. Receiving Antennas
144 pages, in "QST" format.
50 cents, postpaid. No stamps, please!
A.R.R.L.
WEST HARTFORD CONN.

The Design of Speech Amplifiers

(*Continued from page 61*)

condensers of these capacities. The very best paper condenser is required for this purpose, leakage of d.c. through C often placing an unsuspected positive bias on the grid of the following tube, a condition fatal to Class-A operation with resistance coupling. Mica insulation is preferable but high capacity condensers with this dielectric are expensive and bulky.

To minimize bass response, to say nothing of transformer hum picked up by the microphone, a small mica condenser of about 0.004 or 0.006-μfd. capacity may be placed in series with C, offering fairly low reactance to intermediate and high frequencies but, in a sense, rejecting the extreme lows. It may be shorted by a small switch when full bass response is desired. A 2-megohm resistor in parallel with the switch will avoid switching clicks.

The high-frequency response cannot be affected materially except by choice of tube and care in wiring to reduce stray capacities. As a general thing, the combined grid-to-cathode, plate-to-grid and plate-to-cathode capacities, which effectively by-pass the grid and plate coupling resistances to ground, are less with low-μ triodes and screen-grid tubes than with high-μ triodes. Hence, use of the former materially extends the range of the amplifier into the higher registers.

To reduce high audio frequency gain, a series variable resistor and a condenser may be placed between the plate or grid of a later stage and B—, the condenser being chosen so as to offer low reactance to the intermediate and low frequencies. Usually 0.001 or 0.002 μfd. will be satisfactory. The variable resistor should have a range at least comparable to R_p or R_g, whichever it parallels. When all the resistance is in, the high frequencies are saved; when full out, they are bypassed to ground. This combination is the usual "tone control" included in broadcast receivers. In conjunction with the bass control described above, a more or less narrow band of audio frequencies may be passed through the amplifier, concentrating the valuable modulator power into readily intelligible, if not high fidelity, speech components of the transmitted signal.

Transformer Coupling

Transformer coupling is a common method now applied only to medium- or high-level stages, usually with the lower-μ triodes, where the effect of stray magnetic fields of power transformers and chokes may be made negligible and where it is desired to transfer some power. The input and output of the power stage are almost always transformer coupled. The method has the distinct advantage of permitting, if desired, a voltage step-up within the transformer itself and allowing, in many cases, the practical overall voltage gain of a stage to exceed the amplification factor

(*Continued on next left-hand page*)



The Rider Chanalyst established signal tracing. It was the first instrument of its kind and still is the top instrument! Dollar for dollar the RCA Rider Chanalyst offers the most for the money. It offers the greatest utility, flexibility, and stability, together with freedom from complicated circuits . . . $107.50 net.

Over 335 million RCA Radio Tubes have been purchased by radio users. In tubes, as in parts and test equipment, it pays to go RCA All the Way.

RCA Test Equipment

RCA Manufacturing Co., Inc., Camden, N. J.
A Service of Radio Corporation of America

STOP NOISE PICK-UP

Use a SHURE "UNIPLEX"

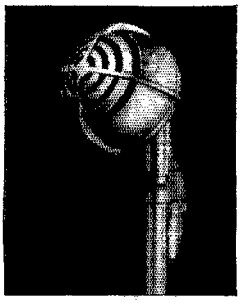

What a difference in 'phone communication when you use a Shure Uniplex Cardioid Crystal Microphone! This true uni-directional microphone is sensitive at the front, but dead at the rear. It cuts down the pick-up of room noise, eliminates echoes, cleans up voice transmission, assures clearer, more intelligible speech. And the "dead spot" at the rear makes break-in 'phone easy. Enjoy these advantages in your 'phone communication, too.

Model 730A "Uniplex" Crystal Microphone, complete with 25 ft. Super-Shielded cable with plug attached. List Price $32.50

Ask Your Jobber or Write Now for Free Catalog 152Q

SHURE BROTHERS Microphone Headquarters

225 WEST HURON STREET • CHICAGO • U•S•A
TELEPHONE DELAWARE 8383 • CABLE: SHUREMICRO

of the tube. Disadvantages exist, largely in the matter of non-uniformity of frequency response, unless the transformer is of good quality and the step-up not more than 1:3. Even then, a more or less pronounced accentuation of some portion of the audio spectrum will usually appear. High primary inductance, however, extends the low-frequency response well into the regions obtained with properly-designed resistance coupling. Tubes with moderate internal plate resistances under operating conditions are preferred, since accentuation of medium high frequencies amounting almost to distortion occurs with transformer coupling and low values of plate resistance. But, unfortunately, moderate plate resistances are associated with moderately high μ tubes, hence the tube chosen must be a compromise in any event. High-μ tubes should never be used with transformer coupling. A resistance of 0.1 to 0.25 megohm across the secondary decreases the amplification but affords a more uniform frequency response. Use of this expedient is more or less a tacit admission of a poor transformer.

Transformer coupling in early stages often results in hum being picked up from nearby transformers or chokes, unless inverse feed-back or the expensive shielded hum-bucking type of transformer is used. Since modern tubes have a great deal of gain anyway, use of transformers for their mere voltage gain is scarcely necessary now except in special applications.

Regeneration

One of the most annoying "bugs" of high-gain amplifiers is unwanted regeneration, caused by feed-back of a signal from the high-level output to the low-level input of the first or second tube. If the voltage applied to the input grid by the feed-back is of the order of the voltage required to excite the tube, the amplifier will be regenerative. The gain in amplification may be considerable, which might at first be thought advantageous. Unfortunately the regeneration is not uniform over the desired portion of the audio spectrum and, if too marked, will cause distortion. If the regeneration reaches too high a value, the amplifier will oscillate, resulting in the familiar howls and squeals.

Occasionally an exceptionally high incoming signal voltage, or a current surge in some stage, will feed back a sudden high amplitude signal to the input. Grids all along the line then may be driven off the linear portion of their characteristics, and even positive, and plate currents will surge upward. The final amplified signal again is fed back to the input, and so on, and the amplifier finally becomes uncontrollable. A "putt-putt" sound, considerably like the sound of a single-cylinder motor boat, may emerge from the output; hence the term "motor boating."

The cure for unwanted regeneration and for motor boating is normally as complete electrical isolation of the plate supply of the last stage from that of the earlier stages as possible. If a common plate supply is used, its impedance common to all

(Continued on next left-hand page)

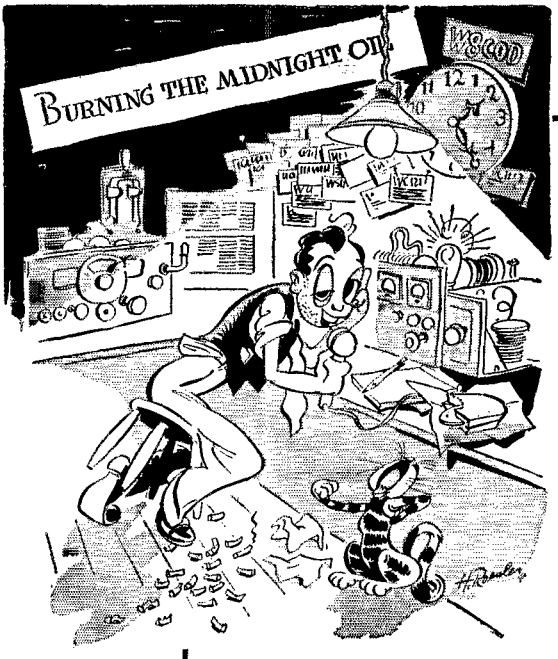

CENTRALAB

Stays Awake



The C. Q.'s have died down . . . too tired to Q.S.L. . . . but Old Man Centralab never bats an eye. Day in and day out this old owl is "wising up" to new developments in the business. In ham shacks . . . on service benches . . . and in the laboratories . . . the word "CENTRALAB" continues to stand for dependability . . . quality . . . and performance. Day or night . . . play safe with Centralab!

Centralab

Div. of Globe Union, Inc.

Milwaukee, Wisconsin

VOLUME CONTROLS — FIXED RESISTORS — CERAMIC CAPACITORS WAVE BAND SWITCHES

FREQUENCY MODULATION Simplified

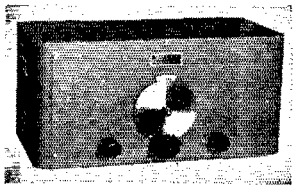

Just connect the CML Type FM-1 Tuner to the phono input terminals of any high quality audio system. The CML FM-1 Tuner can also be used with By. Goodman's Converter for Amateur 112 Mc. work.

TYPE FM-1 TUNER

Wired, tested, complete with tubes..... **$46.50**

IF YOUR DEALER CANNOT SUPPLY YOU, WRITE US. GET OUR BULLETIN.

COMMUNICATION MEASUREMENTS LABORATORY

136 LIBERTY STREET NEW YORK CITY



Write Today for Data

EICOR INC.

EICOR ROTARY CONVERTERS

Change DC to AC for radio transmitters and receivers, for amplifiers, projectors, phonographs, etc. Available for operation on any DC voltage. Standard AC output. With or without filter. Highest efficiency, quiet operation, long life.

513 SOUTH LAFLIN ST. CHICAGO, U. S. A.

A GOOD NAME GOES A LONG WAY



The good name of Ken-Rad Radio Tubes is due to the high standards of their manufacture.

Ken-Rad Radio Tubes

KEN-RAD TUBE & LAMP CORPORATION - OWENSBORO, KY.

Manufacturers of all types of radio tubes and Ken-Rad Electric Lamp Bulbs

THE

A.R.R.L. EMBLEM

Insignia of the Radio Amateur

IN the January, 1920, issue of *QST* there appeared an editorial requesting suggestions for the design of an A.R.R.L. emblem — a device whereby every amateur could know his brother amateur when they met, an insignia he could wear proudly wherever he went. There was need for such a device. The post-war boom of amateur radio brought thousands of new amateurs on the air, many of whom were neighbors but did not know each other. In the July, 1920, issue the design was announced — the familiar diamond that greets you at the top of this page — adopted by the Board of Directors at its annual meeting. It met with universal acceptance and use. For years it has been the unchallenged emblem of amateur radio, found wherever amateurs gathered, a symbol of the traditional greatness of that thing which we call Amateur Spirit — treasured, revered, idealized.

•

Do You Wear the

A.R.R.L. PIN?

THE LEAGUE EMBLEM, in heavy rolled-gold and black enamel, is available in either pin or button type.

In addition, there are three special colors for Communications Department appointees.

- *Red background for the SCM*
- *Blue background for the ORS*
- *Green background for the RM and PAM*

(Red and green available in pin type only. Blue may be had in either pin or button style.)

THE EMBLEM CUT: A mounted printing electrotype, $\frac{5}{8}$" high, for use by members on amateur printed matter, letterheads, cards, etc.

•

ALL EMBLEMS PRICED THE SAME

Fifty Cents Postpaid

(No Stamps, Please)

AMERICAN RADIO RELAY LEAGUE

West Hartford, Connecticut

of the plates provides the means for feed-back, Fig. 2-A. The final tube develops an alternating audio voltage e_a to B— or to ground, actually across the combined load resistor R_2 and the impedance of the power supply, Z. Even with large filter condensers, the power-supply impedance is usually quite appreciable, and a portion of the voltage, e_a, appears across the plate supply of VT1, Fig. 2-A, and is then transferred in the usual manner through C to the grid of the second tube as part of the signal e_1. Since the impedance of the power supply cannot be made low enough when the final amplified signal is large and the frequency of oscillation low, resort is made to another expedient to eliminate the feed-back. A second resistor of 25,000 to 100,000 ohms, R_f, is placed between the plate resistor, R_1, of each of the earlier stages and the plate supply, respectively, and each junction is by-passed to B— or to the cathode through an 8 to 10 μfd. electrolytic condenser C_f, Fig. 2-B. The greater portion of the signal voltage output of each stage is now developed between the respective plates and cathodes or B—, across their coupling resistances or impedances. Thus the unwanted signal voltage e_a appearing across the plate supply and applied to the grids is so small that it is negligible compared to the desired signal voltages. Any *single* surge which might start motor boating will first be subjected to a voltage drop in R_f and then its energy expended, in a manner of speaking, in increasing the charge on C_f. If this additional charge can be dissipated through the power supply load before another surge occurs, the effects of the disturbance will not be noticeable.

The condenser-resistor combination on each stage is known as a filter circuit. The values used must be high enough to accomplish the purpose, but the filter resistances at least should not be too great because of the reduction of the d.c. voltages applied to the plates. Decreasing the capacity of C assists the filtering action somewhat in stubborn cases of motor boating.

Miscellaneous Suggestions

Shielding of at least the first two stages of a speech amplifier is quite essential if the amplifier is to be used within the field of even a low-power transmitter. Usually the problem can be solved once and for all by completely enclosing these stages in a grounded metal compartment and providing adequate r.f. filtering of all incoming leads. A shielded r.f. choke should be located at or very close to the grid of the first tube in series with the "hot" microphone lead, and the grid by-passed to ground through a shielded mica condenser of 0.00005 to 0.0001-μfd. capacity. The incoming microphone lead should be well shielded and the shielding connected firmly to ground through the microphone jack. The incoming B+ may also require an r.f. choke and a mica by-pass condenser. Because of their construction, electrolytic condensers cannot usually be depended upon to furnish low-impedance paths for r.f. Normally all audio leads, coupling condensers

(Continued on next left-hand page)

For the Man Who Wants the Most for His Cash

TURNER
22X Crystal

Complete with Diagrams, 7 Ft. Cable set; Chamoisette Mike Pouch; 90° Tilting Head.

$16.50 List

Handsome, efficient, rugged and dependable. No blast from close speaking. Smooth for voice. Change cable without opening mike. Level—52FB. Range 30–7000 cycles. Full satin chrome finish; advanced engineering style. Adds class to your rig, and sounds grand over the air.

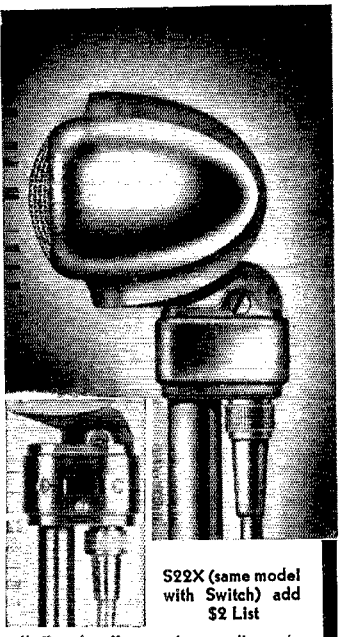

S22X (same model with Switch) add $2 List

Switch permits finger-tip "off and on" control, regardless of distance from amplifier. Shorts line quietly. Permits use of mike as "push-to-talk" unit.

Write for Free Mike Catalog

THE TURNER CO. 904 17th St. N. E. Cedar Rapids, Iowa

Licensed Under Patents of The Brush Development Co.

AMATEUR RADIO LICENSES

Day and Evening Classes in Code and Theory

HOME STUDY COURSES

Reasonable, Efficient and Thorough, Hundreds of Licensed Students Now on the Air

American Radio Institute, 1123 Broadway, New York, N. Y.

See the *NEW* VIBROPLEX
AT YOUR DEALER'S "CHAMPION"

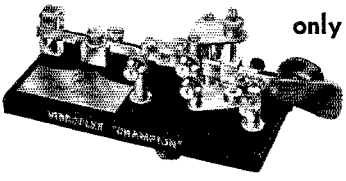

only **$9.95**

Standard size black base. Chromium finished top parts. Equipped with 3/16" contacts. Furnished without circuit closer, cord and wedge.

Left-hand machines $1 extra.

Easy to Learn...Easy to Use

Like all true champions, this new genuine Vibroplex "Champion" defies competition. Amazingly easy to learn, professionally fast and easy to operate and made to last for years. Imagine a genuine full-sized Vibroplex key with up-to-date exclusive Vibroplex features for only $9.95. If you can use the Standard key — you can send better, faster and with less effort with the "Champion" Vibroplex. Simply press lever — Vibroplex does the rest. Ideal for "Ham" or professional. See the "Champion" at your dealer's today. If he cannot supply you, write or order direct from us. Remit by money order or registered mail. Write to-day for descriptive literature of other Vibroplex models including the sensational 1940 De Luxe models.

The BUG trade mark identifies the Genuine Vibroplex

THE VIBROPLEX CO., Inc.
832 Broadway New York, N. Y.

and the tubes should be shielded as well as enclosed in the compartment. A little extra thought and care here will pay dividends in trouble-free operation later on.

The speech amplifier is easily disabled during stand-by periods merely by shorting, with switch or relay, the grids of the driver stage if they be of the low impedance type as is usually the case. Opening the B— or B— to any of the stages usually introduces considerable current surge and, in sensitive amplifiers, may cause motor boating in spite of filters.

So many excellent tried and proved circuits are available, utilizing the principles suggested above, that it is unnecessary to continue further. In general, the amateur who is approaching the problems of 'phone operation for the first time will be wiser to select a simple straightforward circuit with inexpensive tubes and a minimum of tricks, and study it carefully before starting to build, until he is familiar with the function of every part and its value. Inclusion of a good method of automatic gain control[1,2] should be given consideration, to minimize the possibility of interference caused by overmodulation.

[1] MacFarland, "Peak Limiting Amplifier for Amateur Use," *QST*, April, 1939.

[2] Lamb, W. C., "Volume Compression Simplified," *QST* May, 1939.

Correspondence Department

(*Continued from page 102*)

use of carrier equipment is being extended and enlarged rapidly. In a great many instances carrier current is now being used for relay protection and alarm circuits on low-voltage distribution lines, particularly between substations operating on 11- and 16-kv. loop systems. Therefore, it is possible that amateurs attempting to place carrier current equipment in operation on power circuits may seriously interfere with the correct operation of the very important relaying and remote alarm systems already in use by local power companies.

It would be advisable, before placing such equipment in service, for the amateur to consult his local power company on the matter in order to make sure he will not cause interference to carrier circuits already in operation. The results of such interference might well be disastrous and a check-up beforehand may save the ham considerable grief.

— *K. S. Williams, W6DTY*

(*Continued on next left-hand page*)

Tok REG. U.S. PAT. OFF. **Fone**

SOLVES EVERY PROBLEM OF INTERCOMMUNICATION

TOKFONE makes the most complete line of intercommunication systems in the world. A system for every need from simple two-unit installations to 10-unit systems providing 5 simultaneous conversations. Standard systems for the specific needs of police, banks, restaurants, offices, factories, professional and home use. Also custom-designed systems. Let us solve your intercommunication problems for you! Amateurs can make money installing TOKFONE systems. Prices, discounts, literature on request.

REGAL AMPLIFIER Mfg. Corp.
Dept. Q-4—14 W. 17th St., N. Y.

Narrow-Band Constant-Level Speech Amplification

Combining Band-Pass Filter and Output Limiter for More Effective Modulation

BY GENE TURNEY,* W2APT, AND RICHARD SHIMER*

IT HAS been generally realized — although the principle has had little application in amateur 'phone circles — that more effective voice communication could be obtained by limiting the band of transmitted audio frequencies to those which contribute most to the intelligibility of speech. These frequencies, lying between approximately 300 and 3000 cycles, do not ordinarily have as high an energy content as those below 300 cycles; but the latter are the ones which, because of their higher amplitude, set the level for 100% modulation. Therefore if we eliminate frequencies below about 300 cycles the level of the intelligibility-bearing higher frequencies can be boosted appreciably before the 100%-modulation mark is reached, resulting in higher *effective* modulation — from the standpoint of clarity and "getting through" — than is possible when the whole audio band is transmitted.

The elimination of the lower frequencies also removes hum originating in the preceding stages in the speech system, and takes out a good deal of the background noise. Elimination of frequencies above 3000 cycles takes out hiss and the general "shushing" caused by improper enunciation of words at the microphone. The net result is much clearer, more understandable speech which will be highly effective in penetrating through noise and QRM.

* Kenyon Transformer Co., Inc., New York City.

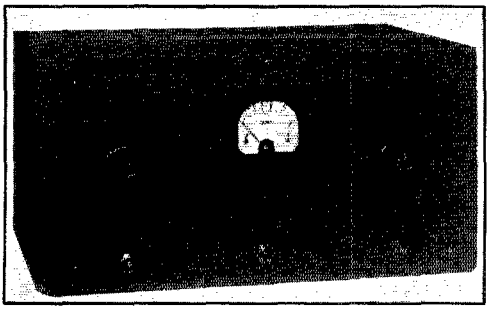

The speech amplifier is built in a standard cabinet for table mounting. Potentiometer controls are the usual volume control and a control for speech compression. A toggle switch is provided for cutting the band-pass filter in and out.

The telephone people know what's needed to get maximum communication with minimum power. Hams could benefit by taking the tip, if they would — even if it meant sacrificing some of that great intangible, "quality." Voice signals will pack more wallop, especially through QRM.

A band-pass filter of suitable characteristics, combined in the speech amplifier with a modulation-limiting device which will keep the average modulation percentage as close as possible to 100% without "shooting over," should represent a combination hard to beat in putting the most effective signal on the air. The unit shown in the accompanying photographs was built to do just such a job, and actual use in ham communication has shown that the two features are well worth the small trouble of installing them.

The complete circuit diagram is given in Fig. 1. The amplifier has three stages — 6SJ7 pentode microphone input, followed by a single 6F8G section, which works into the 6F6 output stage — resistance-coupled up to the grid of the 6F6. The band-pass filter is inserted between the 6F6 and the following amplifier, modulator, or whatever is driven. The limiter circuit, using the second section of the 6F8G, is rather novel, and since it occurs first in the circuit will be considered first.

Limiter Operation

The left-hand section of the 6F8G is the limiter tube. The 6F8G plate and 6SJ7 suppressor are at the same d.c. potential, and the value of this potential is initially set, by adjustment of the 6F8G circuit, so that it is approximately the same as that of the 6SJ7 cathode when there is no signal; i.e., no sound at the microphone. Under these conditions the gain through the 6SJ7 is the same as in a normal stage having the suppressor connected directly to cathode. Actual adjustments are made by setting the 6F8G plate and cathode taps on the bleeder, R_{18}, so that the plate current flowing through the 100,000-ohm resistor, R_8, causes a drop sufficient to bring the plate to the same potential as the 6SJ7

cathode. At the same time, the grid bias should be such that the tube operates practically as a plate detector; that is, the bias is near the plate-current cutoff point. With the 30,000-ohm bleeder specified for R_{18}, the proper point for tapping on the plate is 4300 ohms from ground, and the cathode tap should be 24,000 ohms higher (1700 ohms from the negative end).

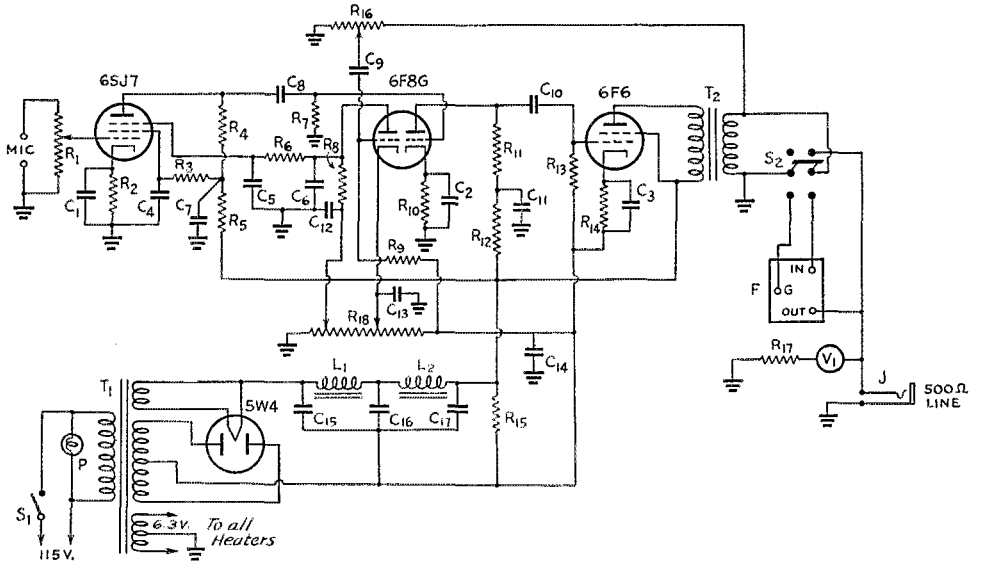

Fig. 1 — Circuit diagram of the band-pass speech amplifier with output limiting.

C_1, C_2, C_3 — 10-μfd. electrolytic, 50-volt.
C_4, C_5, C_6 — 0.1-μfd. paper, 400-volt.
C_7 — 0.25-μfd. paper, 400-volt.
C_8, C_9, C_{10} — 0.05-μfd. paper, 400-volt.
C_{11} — 4-μfd. electrolytic, 450-volt.
C_{12}–C_{17}, inc. — 8-μfd. electrolytic, 450-volt.
R_1 — 5-megohm volume control.
R_2 — 3000 ohms, ½-watt.
R_3 — 2 megohms, 1-watt.
R_4 — 0.5 megohm, 1-watt.
R_5 — 50,000 ohms, ½-watt.
R_6 — 0.25 megohm, ½-watt.
R_7, R_8, R_9 — 0.1 megohm, ½-watt.
R_{10} — 2500 ohms, ½-watt.
R_{11} — 50,000 ohms, 1-watt.
R_{12} — 5000 ohms, ½-watt.
R_{13} — 0.25 megohm, ½-watt.
R_{14} — 440 ohms, 10-watt.
R_{15} — 0.1 megohm, 1-watt.
R_{16} — 0.1-megohm volume control.
R_{17} — Multiplier for volume-indicator meter.
R_{18} — 30,000-ohm, 25-watt adjustable (see text).
T_1 — 320 volts each side c.t., with 5- and 6.3-volt windings (Kenyon T-245).
T_2 — Output transformer, 7000 to 500 ohms (Kenyon T-104).
M — Rectifier-type meter for volume-level indication.
L_1, L_2 — 20 henrys, 50 ma.
F — Band-pass filter unit (Kenyon T-800).
S_1 — S.p.s.t. toggle.
S_2 — D.p.d.t. toggle.

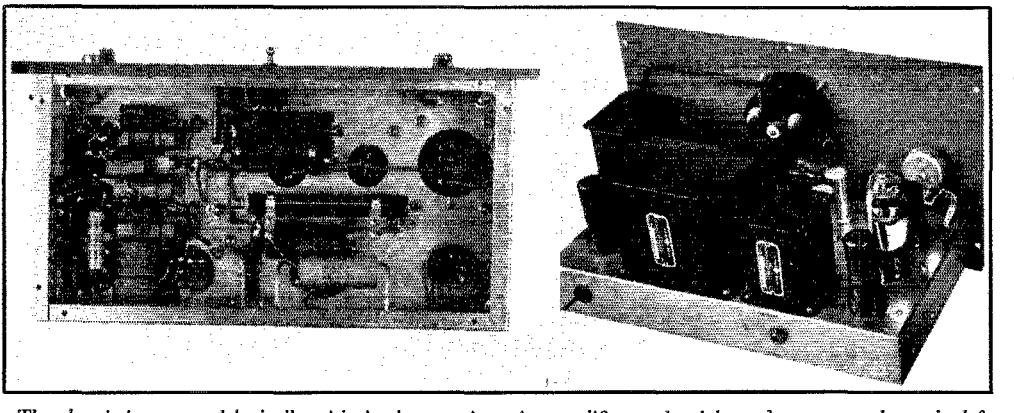

The chassis is arranged logically with, in the top view, the amplifier at the right and power supply at the left. The large cased unit is the filter. Under-chassis wiring is neatly arranged and relatively simple.

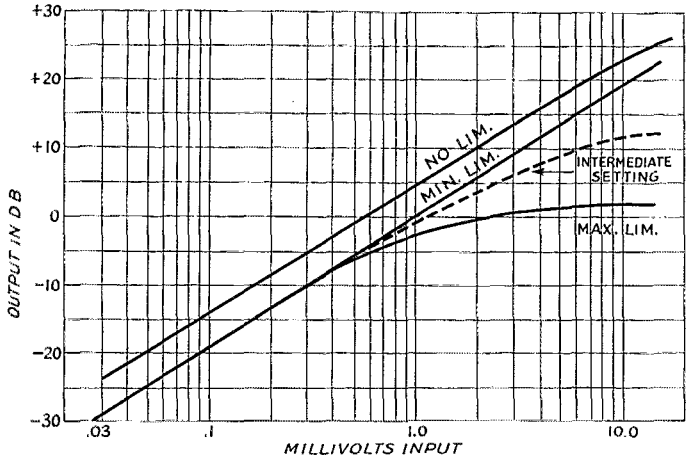

Fig. 2

Under these conditions, when an audio signal is applied to the grid of the limiting section of the 6F8G its plate current increases. The signal is taken from the secondary of the output transformer, T_2, and applied to the limiter grid through the limiting control, R_{16}, and coupling condenser C_9. The increase in plate current causes an increased drop in R_8, consequently the 6F8G plate and 6SJ7 suppressor become negative with respect to the 6SJ7 cathode and the gain of the stage is reduced. C_5, C_6 and R_6 form an a.f. filter to wash out the a.f. variations in plate current so that only d.c. is applied to the suppressor.

The setting of the limiter control governs the amount of voltage applied to the limiter tube and so controls the gain of the amplifier. The gain in turn determines the maximum output obtainable from the amplifier. The voltages on the limiter tube are chosen so that with maximum limiting — that is, limiter control full on — an output of plus 2 db (zero level, 6 milliwatts) is the maximum attainable for any value of input. With minimum limiting the full output of the 6F6 is available, although there is a small amount of residual limiting action present which tends to reduce distortion caused by overdriving the 6F6. Gain curves showing the normal amplifier, amplifier with limiting control set for maximum, and with the control set for minimum limiting are shown in Fig. 2.

Band-Pass Filter

The band-pass filter, *F* in Fig. 1, is a newly-developed unit intended for universal application, and may be connected either as a high-pass, low-pass or band-pass filter, capable of working between 10,000- and 500-ohm values of input and output impedances. In the present application it is used as a band-pass filter in the 500-ohm output circuit. A double-pole double-throw switch permits cutting the filter in or out at will. Curves showing the frequency response of the amplifier with the filter in are given in Fig. 3. The transmission characteristic of the filter alone is flat within a few db between 300 and 3000 cycles, with a sharp cut-off at 4000 and a pronounced drop below 300, but in working out of the 6F6 in the speech amplifier there is a considerable mismatch of impedances with the result that the response curve is changed somewhat. The difference is not serious, however.

Incidentally, the filter is equally useful in reception, where it is valuable in getting rid of high-frequency heterodynes, carrier hum, and other annoying noises that tend to impair reception.

The authors believe that it would be worth the while of every ham operating in the 'phone bands (which, heaven knows, are congested enough) to consider seriously the incorporation of similar

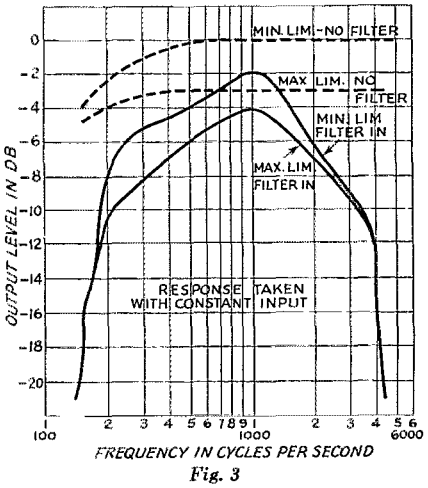

Fig. 3

devices in his speech equipment. Not only will you be doing yourself a favor, but at the same time you'll be doing your bit to help clear up undesirable QRM.

Strays

"My little boy was playing with a neighbor's boy when W9HIU was in the act of calling CQ on 160-meter 'phone. The neighbor's boy said:

"'We hear your daddy on our radio, and we always turn the radio off and turn the carpet sweeper on.'"

(The neighbors have a midget five-tube set!)

—W9HIU

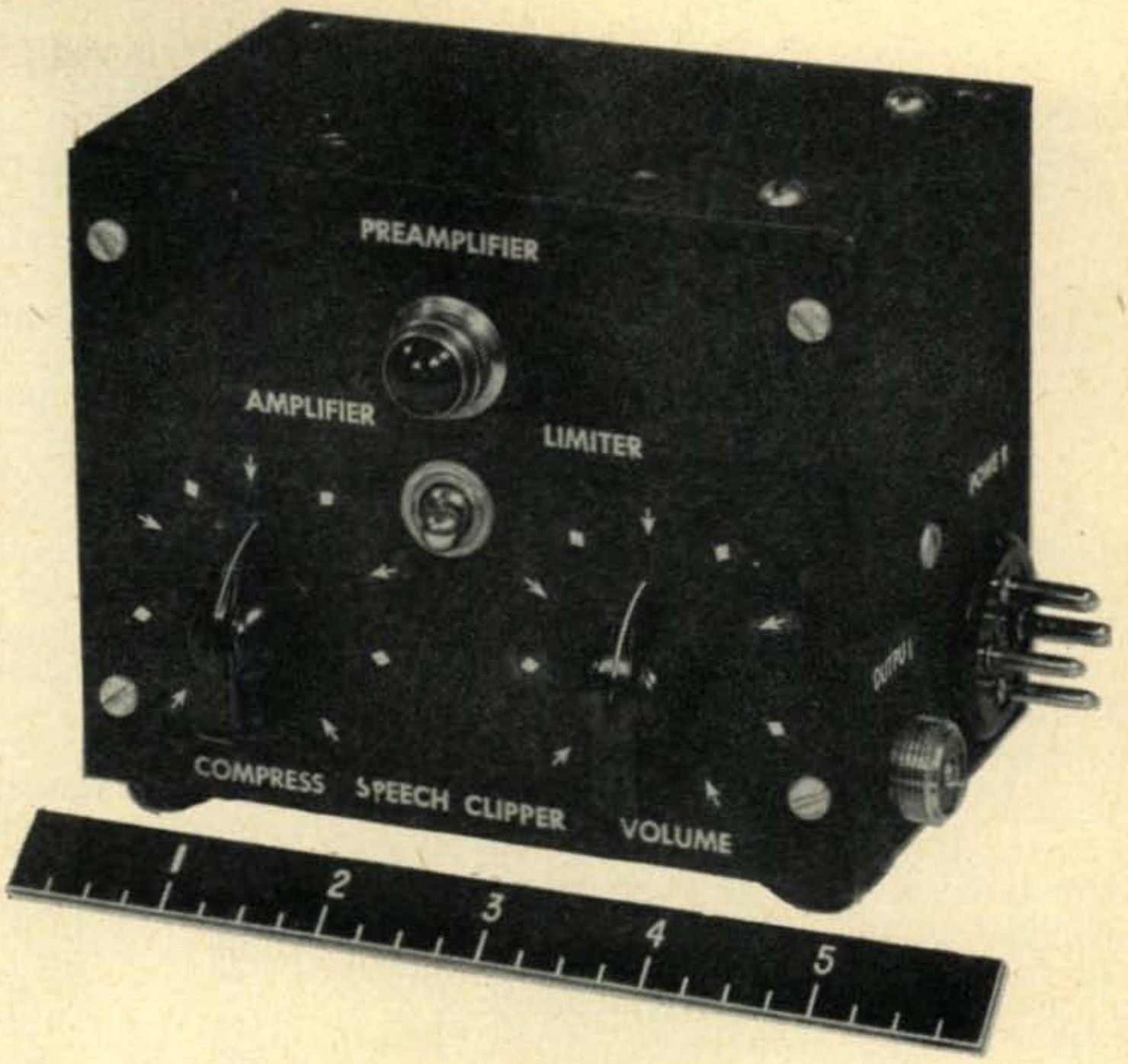

This tiny unit performs the functions of preamplifying and voice-range filtering, with clipping controllable by a panel switch

Preamplifier Speech Clipper

Richard E. King, W4NXJ/2

Theory

The advantages of speech clipping should be quite well known by the old-timer but for the sake of the newcomer to amateur radio, a brief theoretical explanation is in order. To understand the advantages of speech clipping, one must first understand the principles involved in amplitude modulation.

When an r-f carrier is modulated 100% by a sine wave voltage, the energy contained in the radiated wave is 50% greater than the carrier power alone. For example, a 200 w. r-f carrier modulated 100% by a sine wave signal would have a radiated power of 300 w. The additional 100 w. are contained in the audio component or sidebands. If this same carrier of 200 w. r-f was modulated 50% by the same sine wave signal, only 25 w. would be contained in the audio component.

Fig. 1 is a graphic presentation showing how sideband power varies as percentage modulation varies. It is interesting to note how rapidly sideband power decreases as the percentage of modulation decreases. To obtain maximum power in the audio component of the radiated wave, the modulation must be maintained at 100%.

Although 100% modulation is desirable, overmodulation must be avoided. Modulation

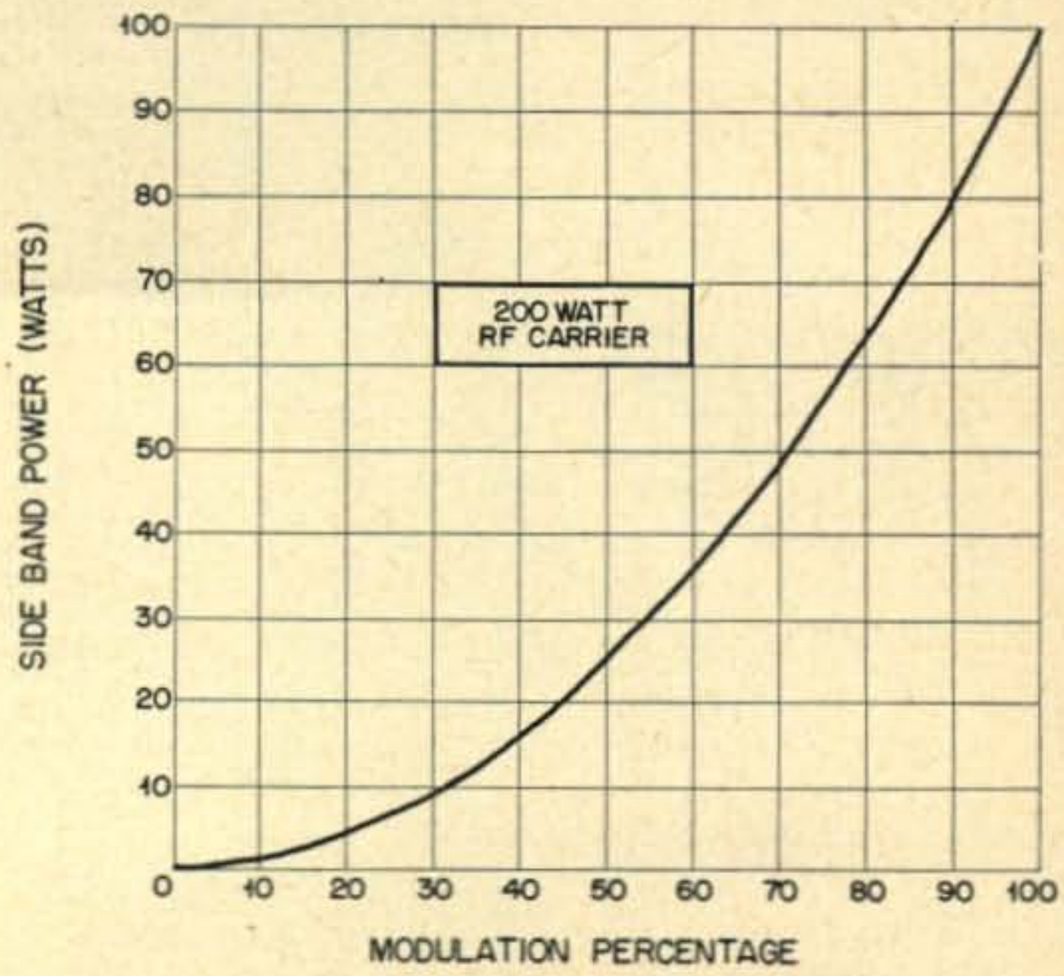

Fig. 1. Audio Power vs. Modulation % (for sine wave).

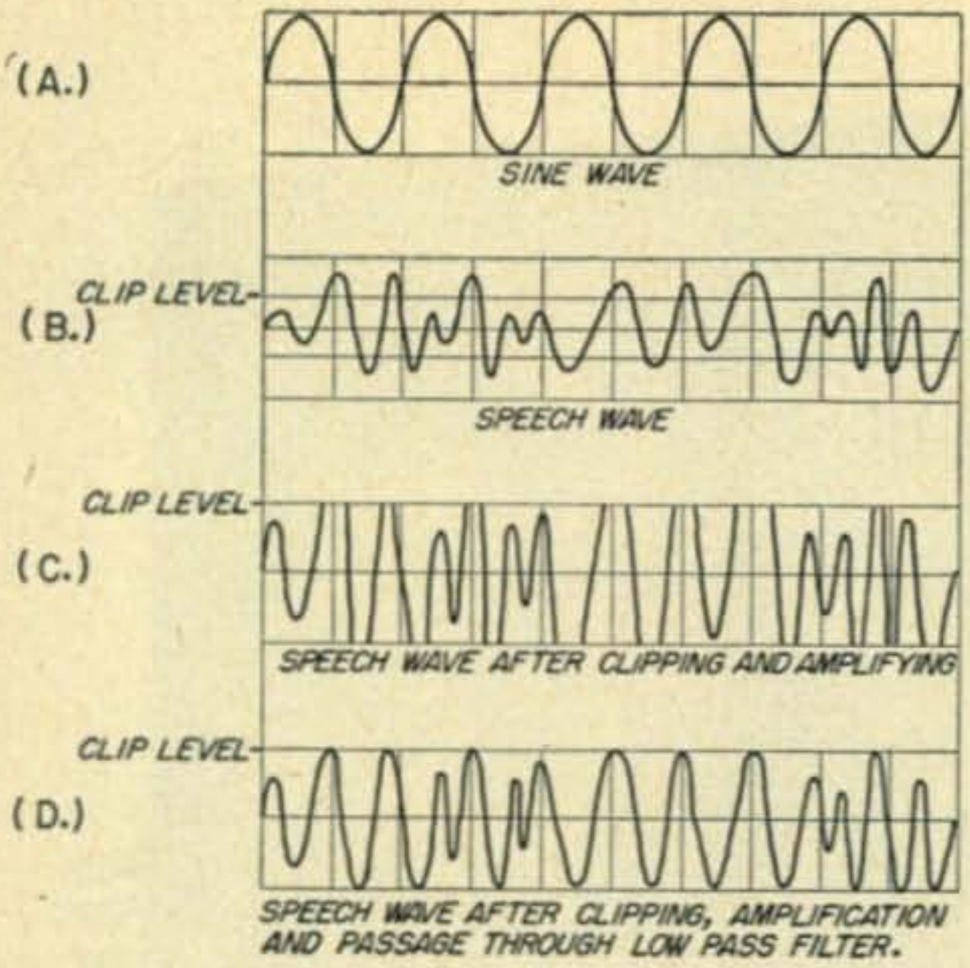

Fig. 2. Significant stages in improving the "heft" of the modulating signal.

in excess of 100% results in carrier cut-off on negative audio peaks. High order harmonics of the modulating frequency are produced that greatly widen the bandwidth of the radiated signal. Even with slight overmodulation, the bandwidth increases as much as 5 times. Therefore, to prevent splatter, modulation must never be allowed to exceed 100%.

Up to this point, only sine wave modulation has been considered. Let us compare a speech wave with that of a sine wave. Referring to *Fig. 2*, (a) and (b), it can be seen that the average power in a sine wave is much greater than in speech. It has been found by experiment that a speech wave of the same peak amplitude as a sine wave only contains 1/2 the power of the sine wave. In other words, a modulator, if adjusted to give 100% modulation on voice peaks, only gives an average modulation of 70% compared to a sine wave signal of the same peak amplitude. Using our previous carrier power of 200 w. in *Fig. 1*, the average audio power is now approximately 50 w. It is obvious from the above discussion that some method is needed to increase the power in a speech wave without increasing its peak amplitude.

By utilizing a clipping device that can be adjusted to clip peaks in the speech wave at any desired amplitude, power in the speech wave can be increased to equal or surpass the power in a sine wave of the same peak amplitude. This is true because the low level portions of the wave can be further amplified without causing overmodulation on signal peaks. These peaks are held at a constant amplitude by the clipper and amplification prior to the clipper increases the speech power without increasing the peak amplitude. This can be visualized by referring to *Fig. 2 (c)*.

Once the modulator gain has been set for 100% modulation, it will be impossible to overmodulate the transmitter because the clipper will keep the maximum output at a constant level regardless of the amplitude of the signal applied to it. This is an added advantage of speech clipping.

With light clipping of four to six decibels, audio quality is not noticeably changed; however, with heavy clipping, the naturalness of a voice is lost even though the signal is very intelligible. Clipping produces the same high order harmonics as overmodulation. It is necessary to provide a low pass filter with a cut-off of around 3,000 cycles to prevent these harmonics from reaching the modulator and producing splatter.

Parts List for Figure 3

C1—.02 ufd. 250 v.d.c.
C2—10 ufd. 250 v.d.c. electrolytic
C3—.003 ufd. 250 v.dc.
C4—.01 ufd. 250 v.d.c.
C5—20 ufd. 50 v.d.c.
C6—300 uufd. 250 v.d.c.
C7—.05 ufd. 250 v.d.c.
C8, C9—200 uufd. 250 v.d.c.
C10—180 uufd. 250 v.d.c.
R1—2.2 meg. 1/2 w.
R2—220 K 1/2 w.
R3—500 K potentiometer
R4—100 K 1/2 w.
R5—100 K potentiometer
R6—300 ohms 1/2 w.
R7, R8—600 ohms 1/2 w.
R9—220 K 1/2 w.
R10—200 K 1/2 w.
L1—4.5. Hy filter choke
CR1, CR2—1N34 Crystal diodes
J1, J2—Standard Mike Connectors
P1—Amphenol 4 prong male connector
SW1—s.p.s.t. toggle switch

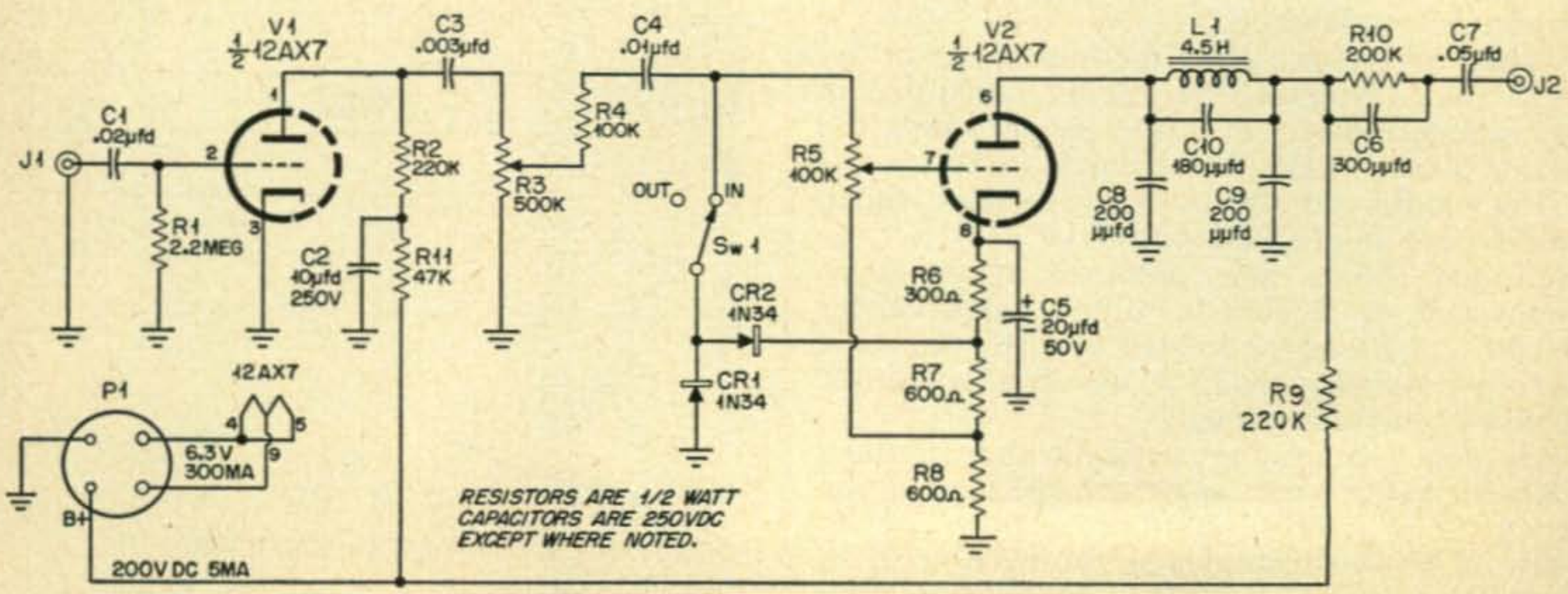

Fig. 3. Preamp-Speech Clipper schematic.

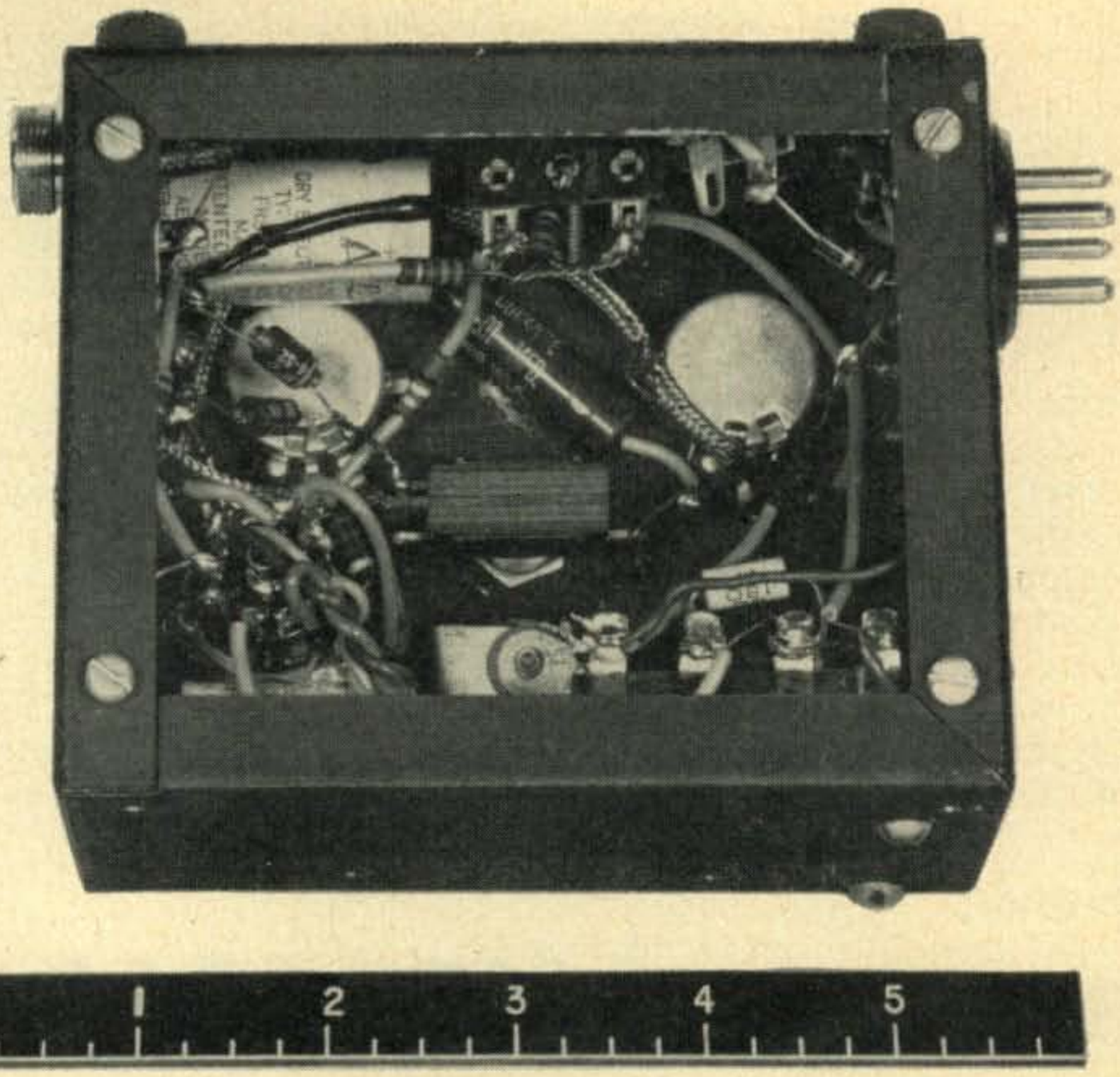

Bottom view showing compact parts placement.

General Description

The unit described here is an effective speech clipper, preamplifier. It contains its own splatter filter and can be used ahead of any speech amplifier or modulator having a high input impedance. It provides variable level speech clipping and preamplification.

The power required by the unit is small, only 200 v.d.c. at 5 ma. and 6.3 v.a.c. at 300 ma. A simple and inexpensive means of obtaining the above voltages is the accessory power socket of most communications receivers. However, at this QTH a small power pack using a selenium rectifier supplies power for the unit.

Circuit Description

As the circuit diagram in *Fig. 3* shows, power is derived through P1, a 4 prong Amphenol male connector. The heaters of the 12AX7 are connected in parallel to allow use of a filament voltage of 6.3 v.

The first stage V1, 1/2 of the 12AX7 duotriode, is a standard triode audio amplifier. The plate coupling capacitor C3 was chosen to taper the low frequency response.

Clipping diodes CR1 and CR2 are held cutoff by a constant bias voltage developed across R7 and R8 by plate current of V2. When R3, the clipping level control, is advanced sufficiently to allow a signal of an amplitude greater than the bias voltage to appear across CR1 and CR2, the diodes conduct and limit the peak amplitude. Further increase of R3 results in increased clipping with the peak signal amplitude being held constant by CR1 and CR2.

R5, the gain control, determines the output of the unit after clipping. SW1, the clipper in-out switch, allows the unit to be utilized as a straight forward preamplifier by removing the clipper.

The low pass filter consisting of L1, C8, C9 and C10, rounds off the speech peaks after clipping, thus preventing splatter.

The R/C combination R10 and C6 gives a rising frequency response to compensate for highs lost due to shunt capacitance of the output cable.

The power supply circuit is straight forward and no comment is necessary.

Construction

The preamplifier-clipper can be built in just about any type of Mini-box, or if you are building a speech amplifier or modulator you

Parts List for Figure 4

C11, C12—dual 16 ufd. electrolytic 250 v.d.c.
L2—4.5 Hy 30 ma. filter choke
T1—Power transformer with 6.3 v.a.c. and 200 v.d.c. output at 5 ma.
P2—Amphenol 110 v.a.c. plug chassis mount type
TM1—4 screw terminal strip
SL1—Selenium rectifier, 5 ma.

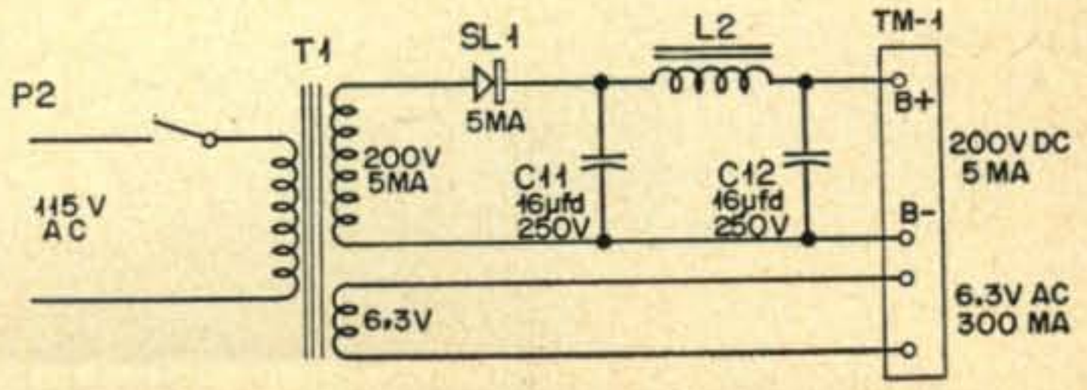

Fig. 4. Simple power supply for Preamp-Clipper unit.

can include the unit on the same chassis.

The unit built at this QTH is housed in a 5" x 4" x 3" Mini-box as shown in the photograph. The operating controls are mounted on the front panel with the cable connectors on the sides. The microphone connector cannot be seen on the front photograph, but is visible on the left side of the box in the circuit photograph.

The 12AX7 tube socket is mounted on an angle bracket as shown in the circuit photograph. The splatter filter is mounted opposite the tube at the lower right.

Filament leads are twisted and kept clear of low level grid leads. Both grid circuit leads are shielded.

Reasonable care should be exercised in locating components to keep as much separation between stages as possible.

The power supply was also housed in a 5" x 4" x 3" Mini-box. No special precautions are necessary in its construction.

Operation and Adjustment

The adjustment of this unit requires an oscilloscope or some other reliable modulation indicator. Procedures for adjusting and analizing patterns will not be discussed here as information is readily available on this subject.

Adjust the limiter control R3 for maximum clipping and talk into the microphone at normal intensity. Adjust gain control R5 in conjunction with the gain control of the regular speech amplifier or modulator for 100% modulation. Once this adjustment has been made, the gain controls should not be moved. The limiter control can now be varied for any desired amount of clipping without fear of overmodulation.

The desired amount of clipping varies under different receiving conditions and can best be adjusted by receiving on-the-air checks. As a general rule, heavy clipping should be used only under adverse conditions, while moderate clipping can be used at all times.

Now!

Hammond's *AMBASSADOR* World Atlas

on a Special CQ Subscription Offer!

Oh, man! If you're a Ham, or just an innocent bystander, here's something you really need: Hammond's New Ambassador World Atlas.

Contents in Brief

- Detailed maps of every country and geographical area
- State and Province Maps
- Vital Distribution Maps
- Resource-Relief Maps
- Maps of Human and Physical Geography
- Stratosphere-View Maps
- Air Age and Polar Maps
- 101 other useful maps, making a total of 326 maps (241 in full color) in a beautifully bound and jacketed 14½" x 11" book of 416 fine quality pages.

Never before has such an atlas been published for the general public with such detail and diversified geographical information. The latest research in geography—the highest skill in draftsmanship—the most modern printing—all have been combined to make this superb encyclopedic *Ambassador* Atlas. Another outstanding feature of this atlas is its extensive index . . . over 100,000 entries including cities, towns, mountains, rivers, bays, countries, etc. Descriptive paragraphs about 2500 principal world cities, numerous photographs, and street maps of the world's leading cities. . . . Plus a 4′ x 3′ full-color map of the world, suitable for framing.

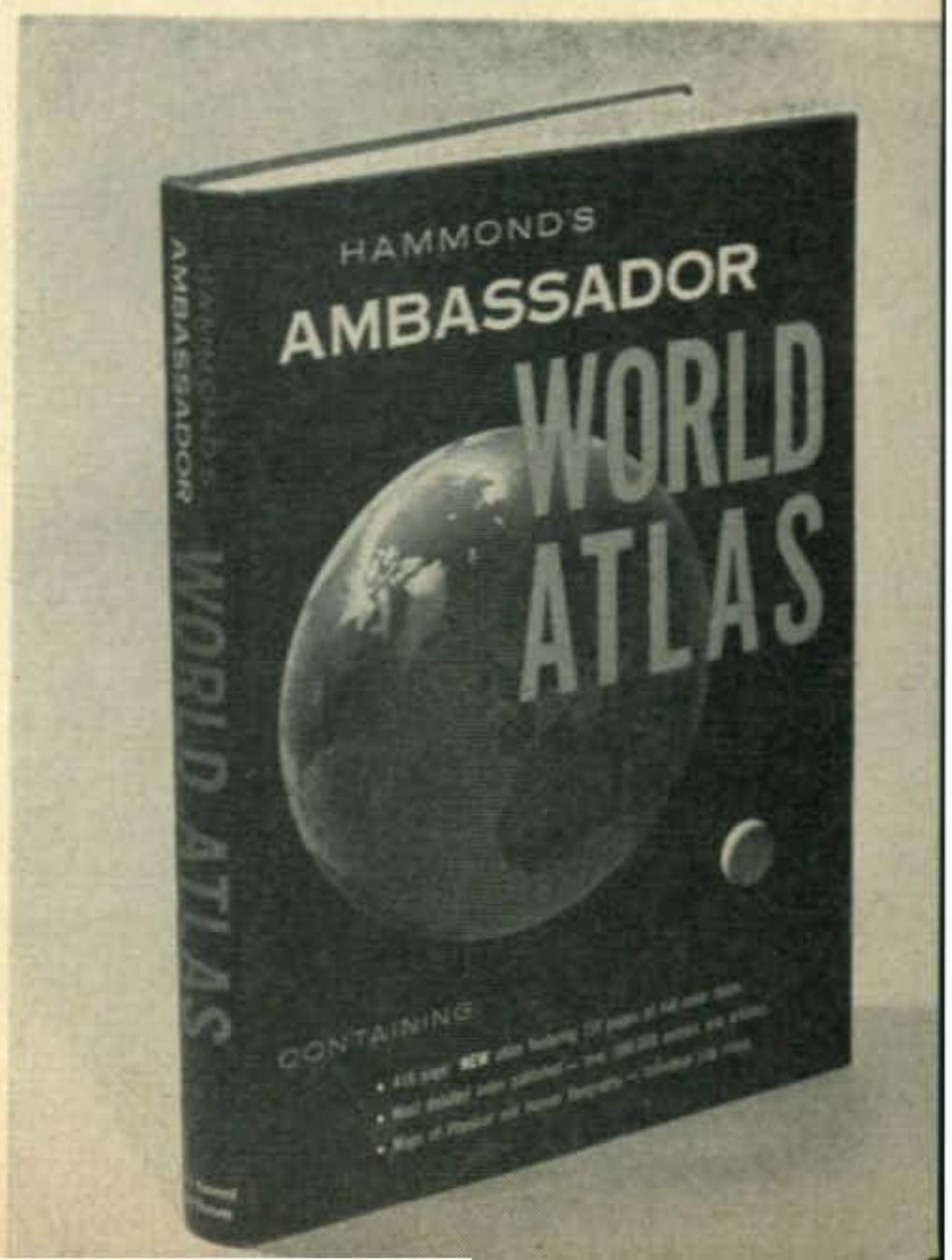

CQ-2

CQ Magazine
67 W. 44 St.,
New York 36, N. Y.

Gentlemen:

Please send me (postpaid) the New Ambassador World Atlas *plus a one year* ☐ *new* ☐ *extension subscription to CQ. I enclose* ☐ *check* ☐ *money order for $12.50.*

(name) *(call)*

(street address)

(city) *(zone)* *(state)*

N.Y.C. residents add 3% sales tax

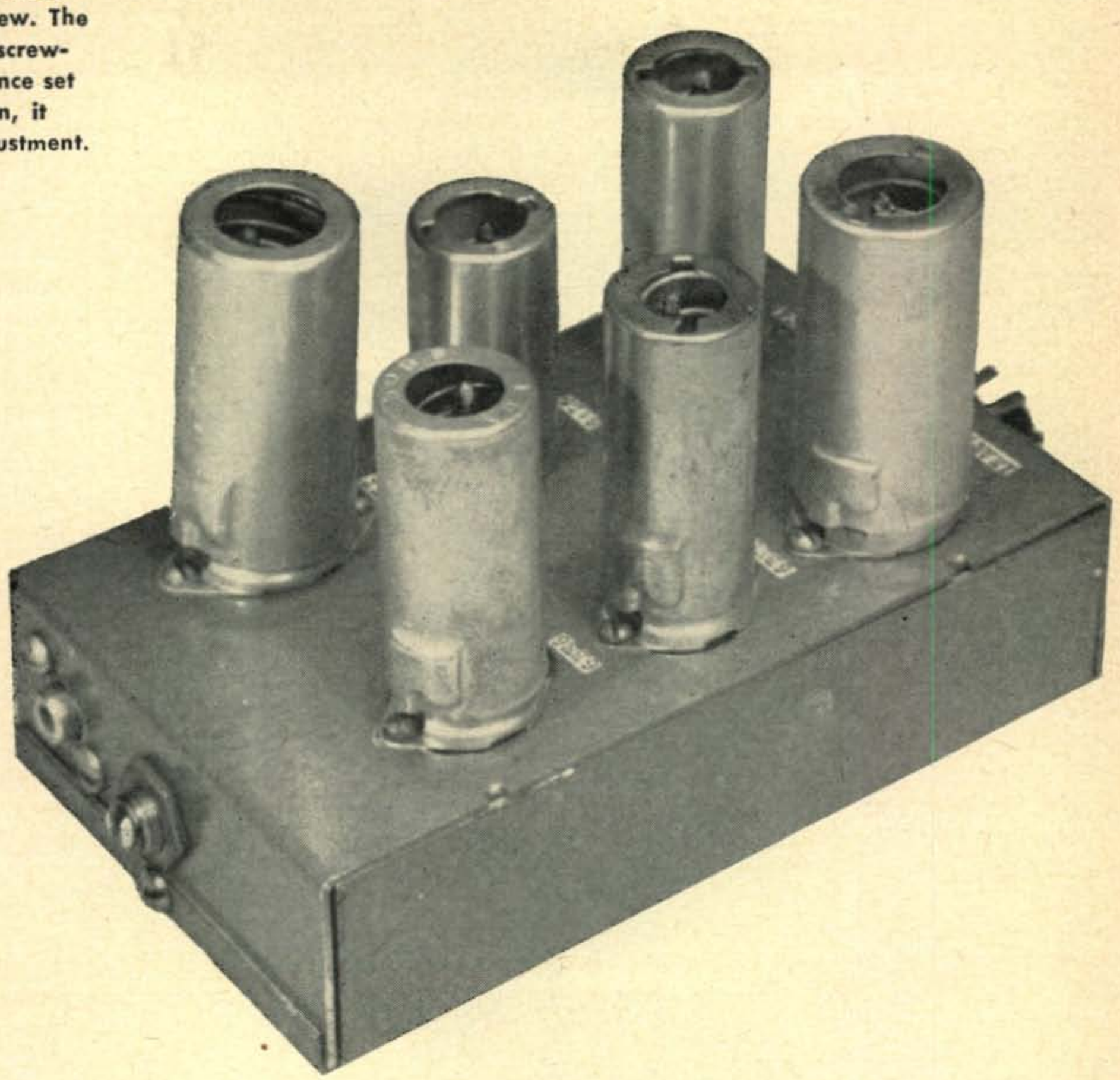

Microphone input connector and output level control are shown in this view. The output control is a screwdriver adjustment. Once set for 100% modulation, it needs no further adjustment.

Limiting Speech Amplifier

Edgar E. Landefeld, W8DCC
710 Milburn Road N.E., Massillon, Ohio

Overmodulation of phone signals and the attendant splatter has been the subject of numerous editorials in amateur publications and many letters from irate victims of such misguided efforts to "get a lot of audio." That overmodulation and broad signals go hand in hand is well known to most phone operators. Equally well known, however, is the fact that a 100 watt transmitter 100% modulated is equal in communication effectiveness to a 400 watt transmitter 50% modulated, and gives less heterodyne interference. There is also the sad fact that a "little overmodulation" pays off. When the going gets rough, there is the tendency to get just a little closer to the microphone, to talk a little louder, in order to get through and complete the QSO. Most amateurs are good citizens, and there are only a few incorrigibles who deliberately take up more than their share of the band. Most of the trouble comes, then, from our salt-of-the-earth John Q. Ham, who either is not sure just where his 100 modulation point is, or who pushes it "just a little" because the QRM is so rough.

What is needed to alleviate this situation is some device that will let our friend talk just so loud, and no louder: some device that will ease up on the gain when he takes the mike in his trembling hand and bellows softly into the mike at a distance of ⅜ of an inch.

There is such a device in use in a number of amateur stations, who are well aware of the disadvantages as well as the advantages of overmodulation, and who prefer to respect the

former. These learned gentlemen are also aware of the advantages of 100% modulation, and this device, commonly known as the speech clipper, gives them a high level of modulation, and effectively prevents overmodulation, if properly set up. Speech clipping is not used as widely as it should be, however, possibly because considerable clipping will noticeably affect the voice quality, or perhaps because of the filtering necessary to remove the higher order harmonics generated by the clipping action.

There is another approach to the problem that has been made quite attractive by new developments. This is the method of speech limiting, as opposed to clipping. A limiting amplifier functions in much the same way as the a-v-c system on a communication receiver. The a-v-c system increases the gain of the receiver when receiving a weak signal, and cuts back the gain when a strong station is tuned in. If the a-v-c system is "flat," the gain change exactly compensates for the difference in signal strengths, and the output of the receiver is the same in both cases. The same principle applied to audio amplifiers ran into considerable difficulty, and those designs which worked satisfactorily were quite complex, and would hardly be likely to appeal to the average amateur. Recently a manufacturer of communication equipment developed a simple limiting amplifier for a piece of his equipment which appears to be ideal for amateur use, and can be readily duplicated in the home workshop.

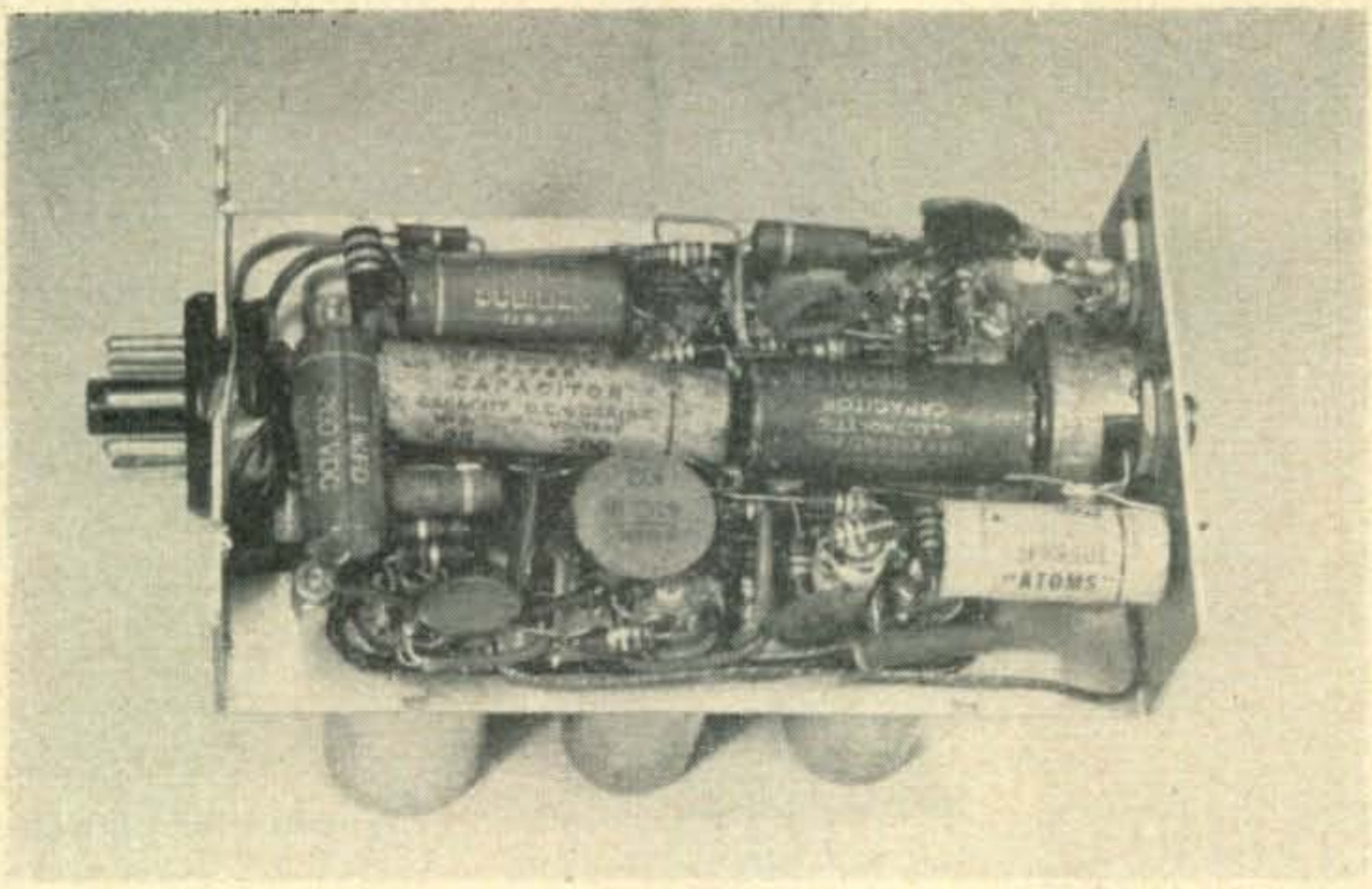

Bottom view shows parts placement.

The Circuit

Referring to Fig. 1, half of a 12AX7 is used as a mike preamplifier, followed by the microphone gain control. This gain control determines how loud a sound will be required to produce limiting. Obviously, it is not desirable to have the TV set in the next room, the little children tussling playfully, and other household sounds modulate the transmitter 100%. Following the gain control are two stages of amplification using 6BE6 tubes. Each 6BE6 has a divided plate load resistor, with the following grid tapped down to receive about 1/10 of the developed voltage. This arrangement actually gives a gain of about unity in the two stages. These stages are used as gain control stages only, and are not designed or expected to raise the level.

Following the 6BE6's is a 12AT7, the first section of which acts as a straight amplifier, and it is from this plate that the audio voltage is taken, in this case through coupling capacitor C10, at the grid of the second section. This first section not only provides output voltage to the potentiometer, but also to the grid of the second section and to one cathode of the 6AL5. The voltage applied to the 6AL5 does nothing until it reaches an amplitude greater than the reverse bias supplied by resistors R26 and R29. When the audio voltage is greater than this, the diode conducts, rectifying the audio, and applying a negative voltage to the grids of the 6BE6's, lowering the gain. It will be noticed that this action will be fast, as the time constant of this portion of the rectifier, R 31 & C 13 is fast, being 470K & .01 μfd. respectively. The voltage applied to the second section is amplified and is used only for further control. This voltage is applied to the remaining diode section of the 6AL5, and the reverse bias voltages are so proportioned that this section does most of the work. It will be noted that the a-v-c bus on this diode section has a much slower time constant, set by R 7 & C 5 which are 1 meg and .25 μfd. respectively. By using a fast and a slow time constant, the system is able to limit sudden sounds, and the beginning of words and syllables, and the slow time constant holds the gain reasonably steady, to prevent the AVC system from removing normal syllabic variations of speech.

The plate supply recommended is 150 volts regulated with a VR 150. At this voltage, limiting is moderate when speaking in a conversational tone about two feet from the usual crystal

microphone. At the point where limiting begins, the audio voltage at the plate of the first section of V4 is approximately 3 volts r.m.s., and will hold at that level as the input to the microphone is raised, up to about 30 db. increase, at which point the 6BE6's will begin to cut off, and the output will drop. In our case, we needed a little more than the 3 volts available from the limiting section, and the output was applied to an additional amplifier, a 6C4, through potentiometer R 23. The potentiometer then sets the maximum amount of audio available from the amplifier, and when once set for 100% modulation on a whistle, or audio oscillator, it will be impossible to overmodulate, but a high percentage of modulation is available at all times.

ical in any way. Several of them have been built of extremely compact construction with no difficulty in getting them to work properly. Hum in one was cured by the 25 μfd. capacitor bypassing the cathodes of the 6BE6's, and a tendency toward a "pumping" action when a steady signal was fed in at just the limiting level in one of the amplifiers was cured when it was noticed that the a-v-c bus was slightly positive with no signal. This was traced to a tube, and replacing the tube cured the trouble. As is evident from the explanation above, the four tubes V2, V3, V4 & V5 actually comprise the limiting amplifier, and there is no reason why this section could not be built up on a small sub-chassis, to be inserted into the normal

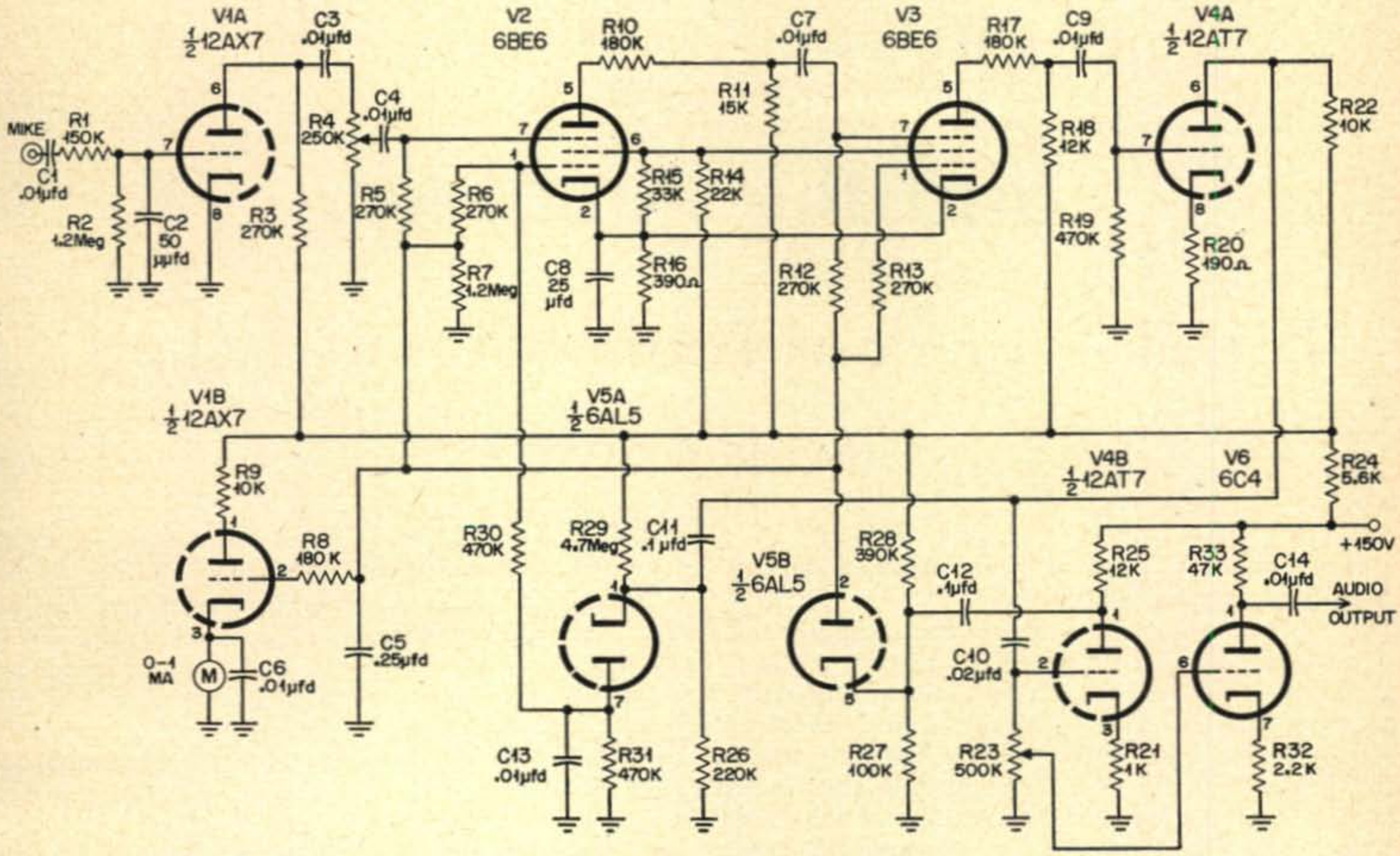

Complete schematic for the Limiting Speech Amplifier.

The second section of V1 is used as a limiting meter, and is not necessary to the operation of the amplifier. A 1 ma. meter is placed in the cathode and the resistor in the plate lead chosen to give a suitable reading on the meter. The grid is connected to the a-v-c bus through a 180K decoupling resistor. When a sound of sufficient volume to cause limiting is inserted into the amplifier, the diodes conduct, causing the a-v-c bus to assume a negative potential. This potential is applied to the grid of the 12AX7 section, lowering the plate current, which causes the meter to deflect downward. Thus, whenever the milliameter is kicking downward, even slightly, the transmitter is being modulated 100%. It is impossible to cheat this amplifier—if you talk louder, it just cuts you down to size.

The construction of the amplifier is not critical in any way. Several of them have been built of extremely compact construction with no difficulty in getting them to work properly. Hum in one was cured by the 25 μfd. capacitor bypassing the cathodes of the 6BE6's, and a tendency toward a "pumping" action when a steady signal was fed in at just the limiting level in one of the amplifiers was cured when it was noticed that the a-v-c bus was slightly positive with no signal. This was traced to a tube, and replacing the tube cured the trouble. As is evident from the explanation above, the four tubes V2, V3, V4 & V5 actually comprise the limiting amplifier, and there is no reason why this section could not be built up on a small sub-chassis, to be inserted into the normal speech amplifier chain, to provide the advantages of limiting without rebuilding the rig. As shown in the photographs, the entire amplifier of six tubes was built on a 6 x 3 x 1 inch chassis, which is small enough to serve as a plug-in adaptor replacing the microphone amplifier in some of the less compact rigs.

25 db Limiting

The operation of this device is quite amazing to those who are aware of the difficulty previously experienced in the design of limiting amplifiers. The output waveform shows no distortion on a 'scope until the amplifier is limiting from 20-25 db. In this region a slight distortion of the wave-form becomes apparent, and slowly gets worse as the limiting is increased. At about 30 db. the distortion of the

[*Continued on page 118*]

SMALL PIONEER DYNAMOTORS

5.5 to 6 Volt input. Output 400 Volts @ 175 mills. Cont. duty or 275 mills intermittent. Comes complete with A and B filters. RF hash filter and internal cooling fan.....$19.97
Same as above 11.5 to 12 VDC input..... 12.97

DM 35 DYNAMOTOR

Small size input 12 V. Output 625 V @ 225 mills.....$12.97

12 VOLT DYNAMOTOR STARTING RELAY

Solenoid type, fully encased. Heavy contacts up to 75 Amps. Contacts and coil isolated from ground.....ea. $1.75
6 VOLT DC RELAY—DPDT small size.....ea. .75
12 VOLT DC RELAY—DPDT small size.....ea. 1.25

TELEPHONE HANDSETS

With push to talk switch, microphone and low impedance receiver .....ea. $2.95
With receiver elements and microphone elements to fit above or make your own telephone.....ea. 75¢ or, pr. $1.35

METER SPECIALS

0-150 ma. meter sq. bakelite case, 150 ma. scale. Basic movement 1.5 mills. We supply shunt wire.....$3.45
0-9 RF 2½" Westinghouse-linear scale from 1 to 9 amps. Bakelite case. Easy to read from 1 amp up.....ea. $2.95

OIL CONDENSER SPECIALS

2 MFD	600 VDC	$.50	6MFD	1500 VDC	$1.95
4 MFD	600 VDC	.75	10 MFD	1400 VDC	2.50
8 MFD	600 VDC	.95	2 MFD	2000 VDC	1.50
10 MFD	600 VDC	1.19	4 MFD	2000 VDC	3.50
1 MFD	1000 VDC	.60	1 MFD	3000 VDC	1.85
2 MFD	1000 VDC	.95	1 MFD	3600 V.	2.25
4 MFD	1000 VDC	1.25	5 MFD	330 AC (1000 DC)	.95
8 MFD	1000 VDC	1.50	8 MFD	660 AC (2000 DC)	2.50

NEW SHIELDED CHOKES

8 hy—150 ma $1.67 6 hy—300 ma $2.97
15 hy—200 ma $2.27

MINIATURE METERS

Suitable for small transmitters. Field strength. Grid dippers, antennascope, etc.
1" Intern. Instrument Co Basic 0-10 MA.....2.97
1" M.B. 0-1 mill (Calibrated 1 mill scale 20 divisions) 3.97
1½" Weston Model 1011 0-500 Microamps.....4.47
All merchandise sold on a 10 day money back guarantee basis.
Min. order $3.00—25% with COD, FOB New York.

PEAK ELECTRONICS CO.

66 WEST BROADWAY, NEW YORK 7, N. Y.
PHONE WORTH 2-5439

CONALERT MONITORS CONELRAD



- Fail-Safe
- 5 Channels
- Low Cost
- Meets FCC Requirements
- FCDA Approved

Effective as of Jan. 2nd, 1957—

MANDATORY FOR OPERATORS OF ALL RADIO TRANSMITTERS!

Kaar

For complete information write:
ENGINEERING CORP.
2914 Middlefield Road
Palo Alto, California

WALKIE-TALKIE

Build a real wireless portable radiophone for the 2 meter amateur band with the following precision components. Factory wired and tested transceiver chassis complete with special dual tube $6.50. UTC "ouncer" mike transformer $.98. High output carbon mike $1.49. Super Alnico headphone $1.25. 2" x 5" x 9" aluminum case $2.00. Wiring diagram $.50. Uses standard batteries available at your local radio store Please include 5% for postage. COD's require $1.00 deposit

SPRINGFIELD ENTERPRISES

Box 54-C Springfield Gardens 13, N. Y.

YASME

[*from page 61*]

Tokelaus are out. After all, let's look at it in a logical way. Is it worth risking the boat, all the rigs and last but not least, *my neck*, just to get a new country, when there are many others I shall be calling at which are rarer? Please try to see it from my point of view. Were I not single handed, perhaps I'd have a bash at landing there, but trying it alone is dead stupid, and I didn't get as far as this by being a mug.

Well, I suppose I could go on for hours discussing Tahiti, but one has to fold up some time. I shall be here for a little while longer, but I do hope I have given you a rough idea of the place, and with the photos that I hope will go with the article, you will see some of the things I have had the pleasure of witnessing. My only regret is that I can't have my tape recordings stuck into the magazine as well.

I suppose the time has come to say Cheerio again, and we'll meet again . . . I hope . . . on Canton Island . . . who knows?

73's . . . pip, pip and all that.

Danny . . . FO8AN

LIMITING SPEECH AMPLIFIER

[*from page 33*]

wave-form is quite apparent, but still less than will show on a lot of the cheaper broadcast receivers!! At about the 30 db. point, any further increase in input will cause the pattern to collapse, and virtually no output will be obtained. The variation in output from the point where limiting begins to the point where the output falls sharply is about 2 db.

This amplifier was connected to the volume control arm of an FM receiver, and a subsequent amplifier connected to drive a speaker, in order to evaluate the effect of limiting on the audio listening quality. It was thought that program material would give a better check of any deterioration in audio quality than voice. The volume control of the receiver was set comfortably below the limiting point. As the volume control of the receiver was increased, the output level came up until the limiting

[*Continued on page 120*]

see you
at the 1956
Dayton Hamvention
SATURDAY, APRIL 14, 1956

FCC license exams will be given at the Hamvention. VHF, SSB, Novice & Technician activities, Modern Receiver Design, TVI, etc. will be well covered in technical sessions and forums.

CQ will be well represented by Editor, Assistant Editor, VHF Editor and Novice Editor, so don't expect to get by without being talked into subscribing or extending your subscription at the specal Hamvention rate. First among many scrumptuous prizes at the Hamvention is a *Hammarlund PRO-310*. Further info may be obtained by writing to Dayton Hamvention, P.O. Box 44, Dayton 1, Ohio and don't delay! April 14 is the date.

BARGAINS in QUALITY CRYSTALS
BY MANUFACTURER

AMATEUR BAND CRYSTALS
Your choice of frequencies ±1 KC
3500 to 4000 KC $1.00 ea.
7000 to 7300 KC 8000 to 9000 KC
3 for $2.00 10 for $6.00

OTHER FREQUENCIES
6000 to 7000 KC 7300 to 8000 KC
± 1 KC your specified frequency
50¢ ea.

SSB FILTER CRYSTALS
New surplus Plated type
54th and 72nd harmonic types in FT241A holders
All channels 200 to 490 KC
50¢ ea.
500 KC $1.25 ea.

FREQUENCY STANDARD CRYSTALS
100 KC 1000 KC
Glass enclosed types. No surplus
Excellent Temp. Coeff.
$4.50 ea. 5 for $20.00

Every crystal guaranteed
Minimum order $2.00 NO COD's.
Add 5¢ postage per crystal

CRYSTALS INCORPORATED
ODELL, ILLINOIS

AN/APR-4 TUNING UNITS WANTED
TOP PRICE PAID. Also Frequency Meters TS-173, 174, 175, and 323, and other good quality surplus equipment; General Radio, L&N and other standard laboratory equipment and instruments, Weston meters, etc.; technical manuals.
ENGINEERING ASSOCIATES
424 Patterson Road Dayton 9, Ohio



BUY
Heathkit, Johnson Viking, Tecraft and other equipment wired and tested direct. New Heath DX-100 Transmitter (illustrated) wired and tested $241.50. Free list of reconditioned equipment. New Heath analog computor, wired and tested, $1000.
J. LYNCH ELECTRONIC CO.
P.O. Box 54, Glen Oaks Branch, Floral Park, New York.



COMPLETE GROUND PLANE ANTENNA
. . . . for 2 and 6 meters. Coax fitting built in. Solid aluminum elements screw into vertical and horizontal or drooping sockets. Set screw secures array to standard TV mast tubing. 6 meter antenna $14.95—2 meter antenna $12.95. Models for 20-15-10 meter bands and commercial frequencies available. All prices amateur Net FOB Nashville.
LEECO 509 Skyview Drive
Nashville 6, Tennessee

[*from page 118*]

point was reached, at which point a further increase made no noticeable difference in either the output level or the apparent audio quality. Several different musical programs were checked in this way, and it would seem that any distortion due to limiting was less than that inherent in the other parts of the system, which were not of hi-fi quality, but gave pleasant and better than average AC-DC receiver reproduction even under heavy limiting. It is also interesting to make an on-the-air check, talking in a normal tone of voice at about 3 feet from the microphone, gradually coming closer, till your lips touch the microphone, without changing your voice level, and then talking loudly right into the mike. The other end of the contact will invariably report no change, except a change in acoustics as you get very close to the mike, and a change in the character of your voice when you talk quite loudly.

Limiter Plus Clipper

There is another application for this amplifier which will be of interest to those who want the ultimate, and that is to use the limiting amplifier to drive a speech clipper. At first thought this may seem silly, and doing the same job twice, but there is a difference in the action of the two systems which makes it a very logical system. The limiting amplifier will assure 100% modulation and no more, but since it is essentially distortion-free, the ratio of peak to average values is not disturbed, and it is impossible to realize any of the increased audio power above this point that it is possible to obtain with clipping. On the other hand, with clipping, the louder you talk, or the further you advance the mike gain control, the heavier you clip, and the heavier you clip, the more distortion is produced, and the less natural your voice sounds. The ultimate, then, would be to use the limiting amplifier ahead of the clipper, using the output control on the limiting amplifier to set the amount of clipping. The output potentiometer could be calibrated for the various clipping levels it was deemed desirable to use, and that amount of clipping would always be available whenever the amplifier was limiting.

At the present state of the art, it would seem that every amateur phone transmitter should have some form of modulation limiting. For those who want the most "communication value" from a given amount of power, and are willing to tolerate some degradation of audio quality, a clipper-filter arrangement would be a logical choice. For those who prefer to maintain a high standard of audio quality, a limiting amplifier such as the one described will do a good job of keeping the audio "right up there" without sacrificing audio quality or detracting from the individual quality of the operator's voice. ■

MOBILE COMPRESSOR

by James L. Tonne, W5SUC
Box 803, State College, N. Mex.

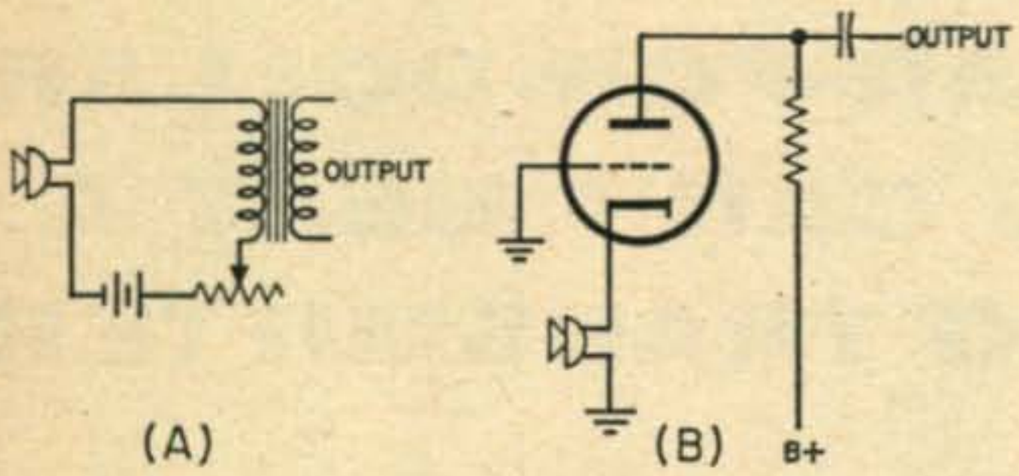

Fig. 1

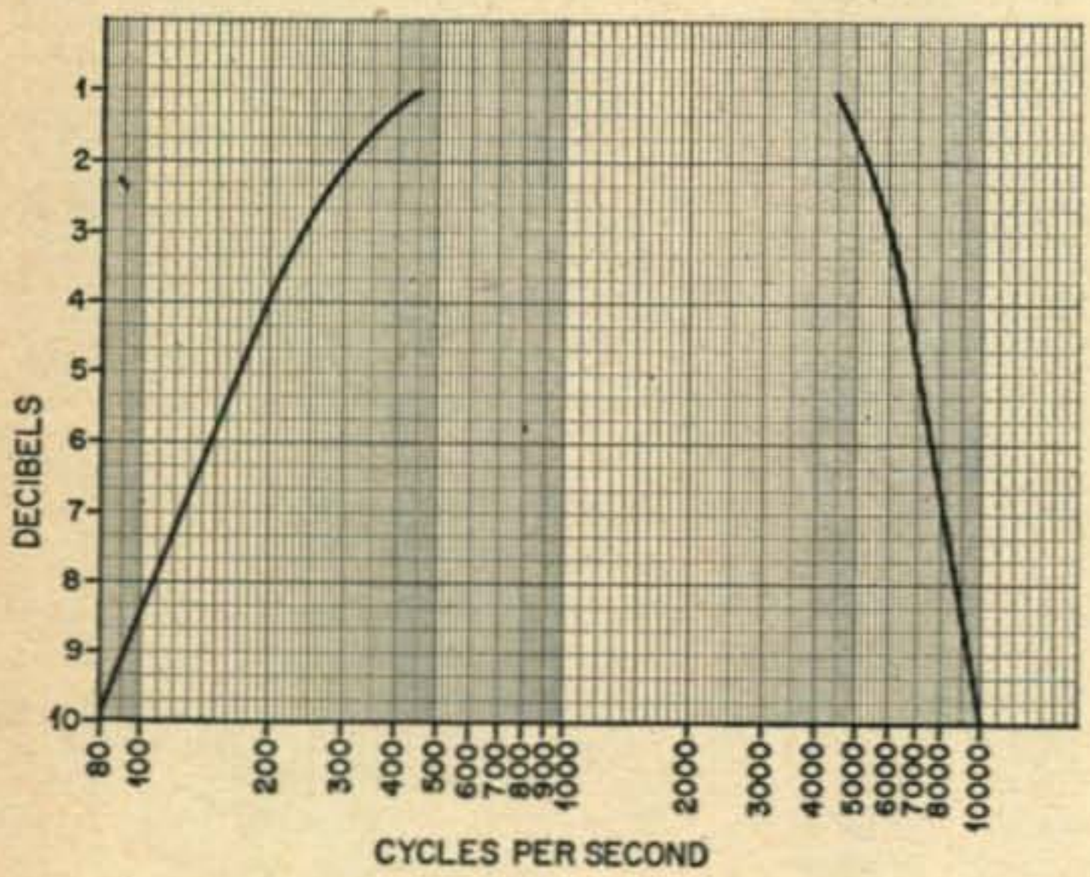

Fig. 4

1 KC = 0 DB

–1	@	450 CPS	–1	@	4500 CPS
–2		300	–2		5200
–3		250	–3		6000
–4		200	–4		6500
–5		175	–5		7000
–6		150	–6		8000
–10		80	–10		10,000

FIG. 4—TYPICAL FREQUENCY RESPONSE

This article is particularly aimed at the mobile fellows, but any 'phone operator in a situation such that he may at times use a carbon microphone should take note of the material presented. The basic idea is that of modifying the input circuitry to the usual mobile modulator in such a manner as to produce a simple but effective automatic gain control system. The circuit is set up so that an existing modulator may be converted to incorporate this system with a minimum of effort. As far as the author knows, this is the only all-electronic system that generates *no* distortion with compression, and furthermore is *impossible* to overload. These may seem like pretty bold claims, but a quick look at the circuitry involved will show this to be true.

Background

In *fig 1A*, the output from the transformer secondary can be varied over a wide range by varying the rheostat. This is probably the oldest method for varying the output from a carbon microphone. Today's mobile operator seldom uses such a scheme, and usually shies away from transformer coupling. *Fig 1B* is quite frequently encountered. It would seem that by applying a negative d-c voltage to the grid of this tube, it could be made to pass less current to the microphone, hence control the output in a similar manner. If this d.c. is derived from rectified and filtered audio output from the modulator, as shown in *Fig 2*, automatic gain control will result. As one talks louder, the modulator produces more output, hence the d-c output from the rectifier goes more negative. This lowers the microphone current, causing a decrease in output. Since the mike output is reduced but not distorted in the least by reducing its current, any desired degree of compression can be obtained with no increase in distortion.

Suppose the operator shouted into the microphone. The modulator output, and so the rectifier output, would rise to such a value that the mike current would drop as necessary nearly to zero. This would restore the output

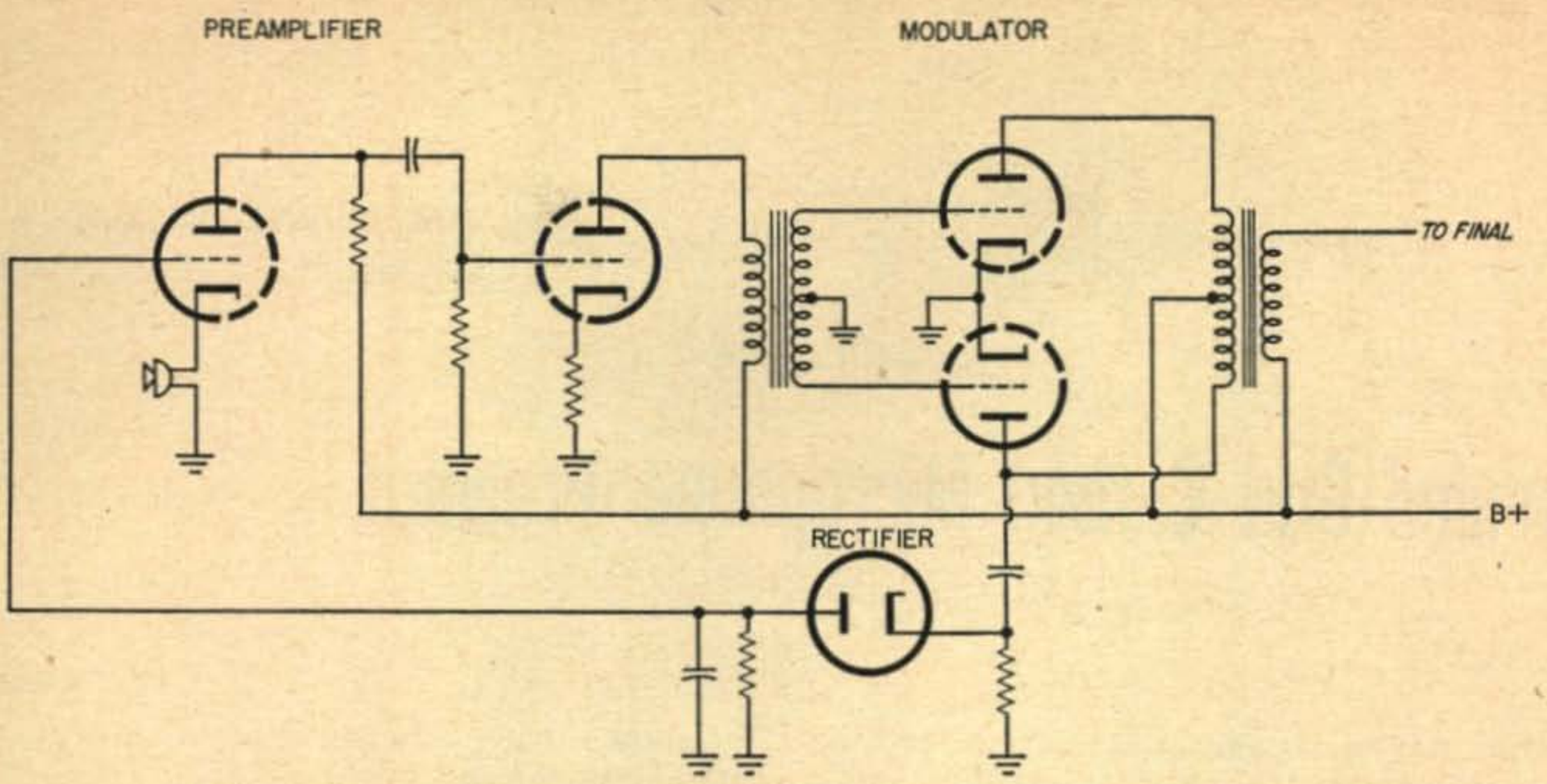

Fig. 2

to normal. There is no limit as to how close to zero the current may go. Since this is true and since the system is reverse-acting, it cannot overload. In fact, it is found in practice that the mike button will overload before the rest of the system will fail. Of course this occurs only at tremendous acoustic inputs.

The Circuit

A modulator "front end" which has been painstakingly designed for this application is shown in *fig 3*. Every single component, the circuit arrangement, tube lineup and the like has been set up for optimum performance. As a result, the circuit is stable and efficient. Output is sufficient (.3 watt) to drive a 6N7 or some such tube. Of course if the modulator is operated class A_1, this will suffice for one of a kilowatt rating.

A 5687 is used for the first and last stages because of its high transconductance and consequent efficiency in these two places. One half of a 12AX7 is used for the amplifier in between, and the other half is put into service as a rectifier. No input transformer is used in the interests of economy, compactness and ease of reproduction.

The microphone acts as a variable cathode resistor for the first stage. Audio appearing at the plate is applied through C_3 to the grid of V_{2a}. This tube functions as an ordinary high-gain amplifier. Its cathode resistor is bypassed to obtain maximum gain. The output is coupled through C_5 to R_{12}, the modulation control. R_{12} feeds to V_{1b} the required audio for the modulator tube(s). V_{2a} also drives the rectifier, V_{2b}, through C_6 and a biasing network composed of R_8 and R_7. The rectifier produces a d-c voltage across R_9. This is filtered and applied to the grid of the input stage.

Whereas the first stage is frequently a high-mu triode such as a 12AX7 in hopes of getting more output, this and additional cathode resistance were both shown by long experimentation to be incorrect. For the best output from this stage, one should use a tube with high transconductance, a minimum value of plate load and no additional cathode resistance.

[*Continued on page 96*]

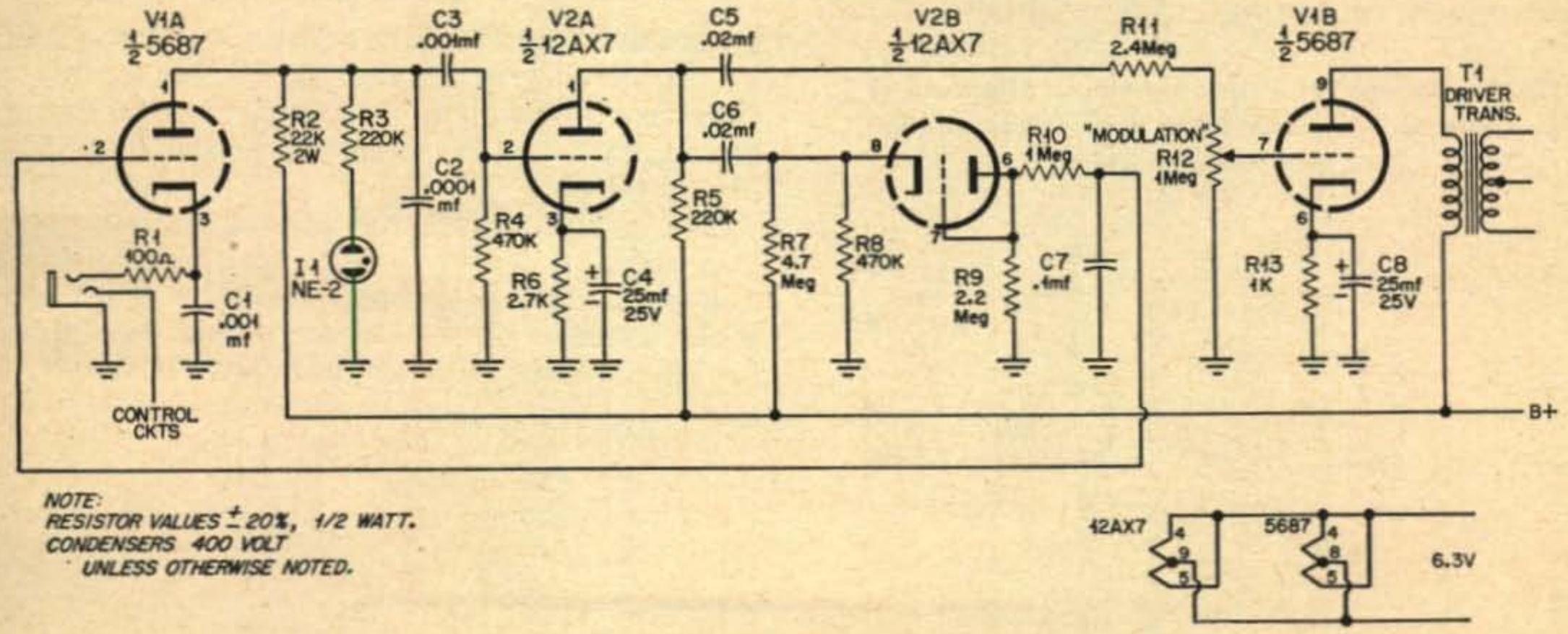

NOTE:
RESISTOR VALUES ± 20%, 1/2 WATT.
CONDENSERS 400 VOLT
UNLESS OTHERWISE NOTED.

Fig. 3

ANNOUNCEMENT

Again in this issue a new section appears in CQ where distributors may advertise trade-in and reconditioned equipment. This section, called the TRADING POST will be confined only to legitimate ham distributors as a means of announcing the many excellent used items available.



BARGAINS: Send for list of reconditioned receivers and transmitters with new guarantee. 10% down with up to 24 months to pay. In stock new Collins, Johnson, Hallicrafters, WRL, National, Hammarlund, Gonset, Elmac, Drake, Central Electronics, B & W, Hy-Gain Mosley, Gotham beams. Shipped on approval. Write en, WØZCN, or Glen, WØZKD for your best deal. **KEN-ELS RADIO SUPPLY CO., 428 Central Ave., Fort Dodge, Iowa.**

Reconditioned. Shipped on approval with easy terms. Hallicrafters S38 $29.00; S40B $79.00; SX99 $119.00; SX71 $149.00; SX96 $189.00; SX100 $229.00; SX101 $299.00; HQ129X $159.00; HQ100 $139.00; HQ140X $189.00; HQ150; National NC98 $99.00; HRO50T $199.00; NC183D $279.00; NC300 $279.00; Viking II $199.00; Ranger $179.00; Valiant, Pacemaker; PMR6A; PMR7A; AF67; Collins 75A1; 75A2; 75A3; 75A4; KWS1. Many other items. Write for list.

HENRY RADIO COMPANY, BUTLER, MO.

SEPTEMBER CLOSEOUT!
FOLLOWING ITEMS TOP QUALITY RECONDITIONED AND DEMONSTRATOR ITEMS:

B & W 1000A Linear $395.00, Collins 75A3 $375.00, Collins 75A4 $549.00, Eldico SSB1000 Linear $395.00, Gonset 500W Linear $149.00, Gonset 2 meter communicator III $219.00, WRL Globe King 500B new factory sealed crate $595.00, WRL Globe King 400 complete $199.00, Hallicrafters HT-32 $549.00, Hallicrafters HT-33 $495.00, Hallicrafters SX-101 $325.00, Johnson Valiant $349.00. Also hundreds of standout values in smaller units. Write for our brand new catalog No. 758 just released.

BURGHARDT RADIO SUPPLY, INC.
BOX 746, WATERTOWN, SOUTH DAKOTA

MOBILE COMPRESSOR

[*from page 29*]

The control voltage produced by the rectifier will cause a side effect at the plate of V_{1a}. This is a control transient or "thump." This transient is slow-acting, due to the filtering action of R_{10} and C_7. Its effect on the following stages can be eliminated by an elementary high-pass filter (C_3 and R_4) between V_{1a} and V_{2a}. Because of this possibility of a thump, C_3, R_4, R_{10} and C_7 should be left about as they are shown on the schematic. It might be mentioned that this transient takes the form of a voltage rise. By measuring it, an indication of compression is obtained. R_3 and I_1 form an inexpensive voltmeter, brilliance of which is proportional to compression. The neon will go out when no compression is occurring.

The rectifier in an automatic gain control system should not conduct until a certain signal amplitude is reached. This delay should be approximately equal to the maximum expected control voltage. In this design, the maximum voltage will be about 25 volts. Thus, a divider of 10:1 from the high voltage line to ground will properly bias the rectifier. R_7 in conjunction with R_8 provides this bias for V_{2b}.

Considerable thought was given to the output (in reality a driver) stage, V_{1b}. Negative feedback around V_{1b} and T_1 for better regulation can easily be added, but requires complete redesign for each type of transformer used. Since it was decided at the outset that this circuit was to be set up in such a way that it could easily be duplicated, negative feedback in all forms was abandoned. Internal impedance of V_{1b} is sufficiently low that if a decent transformer is used at T_1, adequate drive to a following class B stage is assured. Be sure to bypass R_{13} with at least several microfarads. R_{11} has been added to prevent overdriving the output stage, V_{1b}.

Due to the fact that an F-1 button or equivalent will probably be used, and since carbon buttons have their own bandpass action, no high or low-frequency cut was employed. An F-1 button will supply good quality of its own accord. The frequency response of this particular unit is shown in *fig 4*. The drop of the high frequencies is due to the driver transformer; the lows drop due to the transformer and the deliberate cut by C_3 and R_4.

When this unit was tried at a fixed station operating with high power, r-f feedback occurred. This was cured by the addition of C_2, C_1, and R_1. These components may not be necessary in an efficient or low-powered installation.

[*Continued on page 98*]



For further information, check number 54 on page 126.

MOBILE COMPRESSOR

[*from page 96*]

Usage

There are no adjustments other than to talk into the mike and adjust R_{12} for adequate modulation. How this is done is best left up to the individual.

Since the audio gain is self-adjusting, the loudness of the operator's voice will no longer affect transmission quality. This may be a point to consider in the construction of a civilian defense station, or for that matter any station that may have a number of operators. An excited or uninformed operator will no longer garble his transmissions. ■

INSTALLATION

[*from page 48*]

when only the filaments were on, and high speed with the application of high voltage. Although the defroster fan had a dc motor, it operated and performed satisfactorily on an ac, 6.3 filament volt winding.

Using the DX-100 "Driver" Alone

Coaxial connectors were used throughout for rf, permitting a reasonable fast power shift when needed. It is only necessary to change the DX-100 output coaxial lead from the antenna relay to the high power final input jack, and connect the final coaxial lead to the antenna relay. My 800 watt final was intended for 10 and 20 meter CW use only. The DX-100 plate switch actuates the final amplifier plate circuit through a relay.

Design of Home Built Equipment

A commercial appearance of home built equipment can be accomplished by building the oscillator or VFO and doublers into small table top cabinets. To reduce overall size, power supplies can be "in the desk." My external HRO-5 power supply is in the rear of the bottom, left-hand drawer. The power supply ac switch is paralleled to the rear of the HRO-5 receiver cabinet.

Regardless of how the equipment is "built-in" or how much power is used, one noticeable difference is how easy and comfortable operating can be, with an arrangement of controls —all at your finger tips—plus a systematic filing of QSL cards, operating aids, logs, callbooks, and other amateur necessities. Last but not least, I reserved one (the top left-hand drawer) for amateur hap-hazardry, where a collection of tools, burned out tubes, broken connectors, and bits of worthless wire, maintained my amateur prerogative of rebelling against total orderly organization. All in all operating efficiency and enjoyment was increased tremendously. ■

YOU SAW IT IN CQ

by JIM TONNE, W5SUC
Box 803, State College, New Mexico

Grounded-Grid Carbon Microphone Preamps

In this day and age, modulation systems using a carbon microphone frequently use a grounded grid first audio stage. This is quite understandable, since the resulting circuit is simple, compact, inexpensive and easy to duplicate. Power consumption is low, and microphone noise may be lower than with any other method. It seems standard practice to use a plate load on this first stage of the order of 100K ohms. In addition, one frequently sees a high-mu triode such as a 12AX7 in this position.

Whether or not a high-mu triode is desired in this location, and whether or not to use a high value of plate resistor such as 100K is highly questionable.

A Look at the Cathode . . .

The usual configurations for grounded-grid audio preamps are shown in Fig. 1. The version shown at *A* is the poorest of the three. This is due in part to the cathode resistor causing a reduction in microphone current along with an audio drop. Bypassing the cathode resistor as in *B* is a step in the right direction, for now the audio is bypassed around the resistor. But the output from a carbon microphone is approximately proportional to the current through it, and the microphone current is still too low for good sensitivity. So shorting out the cathode resistor entirely, as at *C*, is another way of getting more sensitivity. It can be shown using tube curves that this is a "legal" step, causing no troubles from distortion or any such thing. Tube plate current will remain well within bounds.

Fig. 3 — Set-ups for measuring output of grounded grid stages. RD is chosen to drop screen voltage to recommended value.

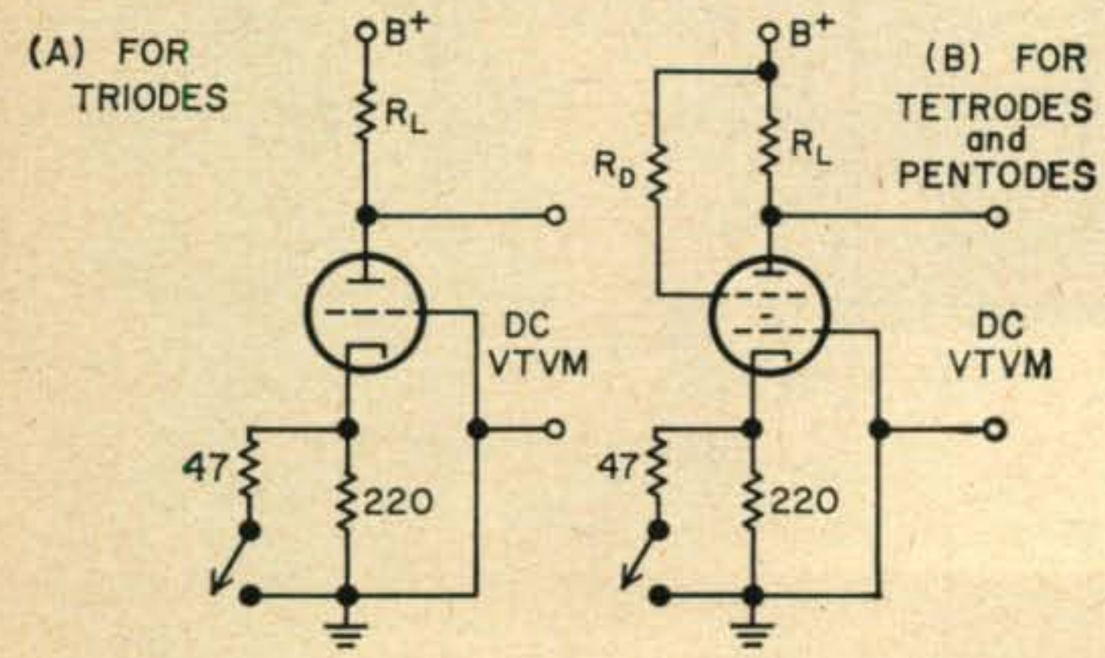

. . . And the Plate.

The best arrangement of all is that at *D*. While lowering the plate resistor will slightly reduce the effective amplification factor of the tube, the increased plate (and therefore cathode) current will allow the microphone to put out much more. The net result is a vastly increased stage sensitivity. It will pay to look into this a little more closely.

It can be shown, both graphically and experimentally, that varying the plate load resistor has a pronounced effect on stage output. A series of tests were conducted, results of which are shown in Fig. 2. These curves were not made by talking into a microphone and varying a pot; they were obtained with the setup in Fig. 3. This method has proven to be an accurate and easily controlled method of simulating a carbon button. Each tube was further tested by substituting in several values of plate resistors with a carbon mike in the cathode. Output at the plate was observed on a scope to make sure that linearity was being maintained.

It can be seen that the plate load resistors generally used will invariably result in less stage sensitivity than is possible. For example, a common value of plate resistor for the 12AU7 in grounded-grid service is 100K. If this resistor is run down to 10K, stage sensitivity will be increased by a factor of better than 3, or about 10 db.

The graph shows that among the single-section tubes a 6AU6 is the best, and although not indicated, it out-performed several other types tested. The plate load of this tube should be 18 to 22K, with an unbypassed screen re-

Coil Data

Coil L-a: 20T. #30 scramble-wound on a ⅜ slug for m. (8 mc)
Coil L-b: 22T. #22 close-wound on a high value 1-watt res. (24 mc)
Coil L-c: 4T. #22 spaced to ⅜ inch, wound on former coil L-41 form. (50 mc)
Coil L-d: 2T. #16 ½ inch ID, spaced to ¾ inches. *(50 mc)*
Condenser C-a: 7-40 mmfd ceramic trimmer

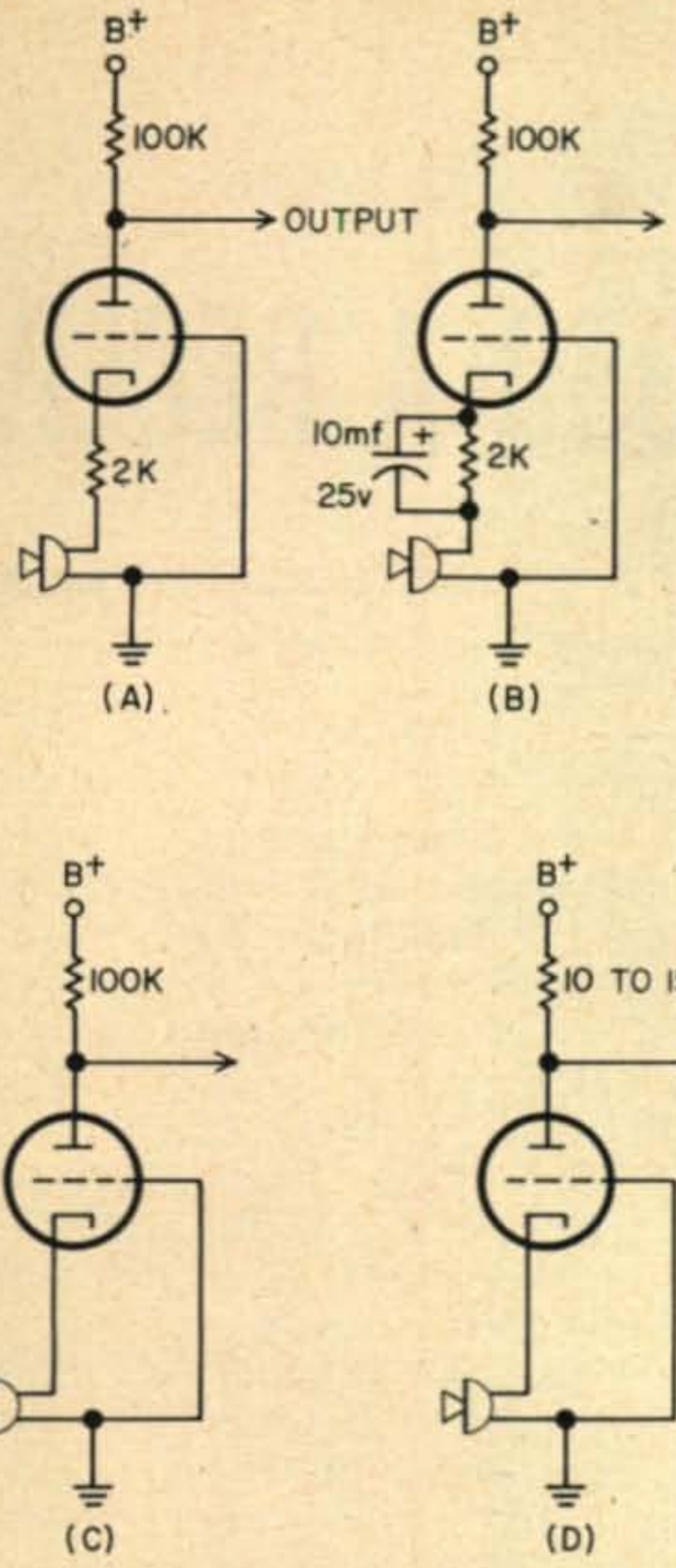

Fig. 1 — Basic circuits for carbon microphone grounded grid preamplifiers as discussed in the text, (A) is the most common and yet the least efficient of the designs shown. The final version as concluded in the text is shown at (D). Tube is assumed to be half a 12AU7.

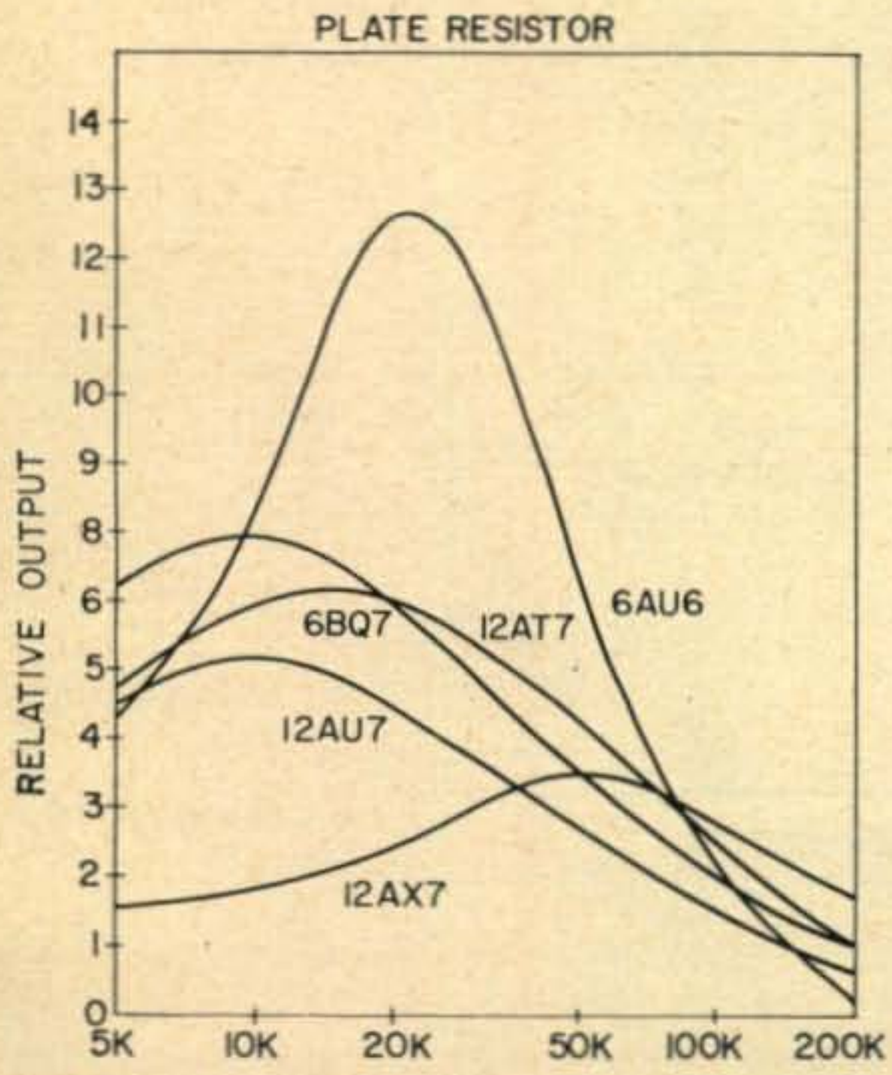

FIG. 2

sistor of 27K. (No, this isn't a misprint!) Among the dual triodes, the 6BQ7 reigns, its best load being 10K. Next is a 12AT7 with a load of 15 or 18K. Third is a 12AU7 with a load of 10K. Lastly comes the 12AX7, its best sensitivity coming with a resistor somewhere between 39 and 62K.

If perhance someone misunderstands, it is emphasized that these recommended values of plate resistors are for grounded grid audio service with a carbon microphone in the cathode circuit. They are far from optimum for most other types of amplifiers.

There are no doubt a few pessimists in the crowd. They'll probably jump up and down, denouncing the claims made in this article, countering with some sort of warning about burning out tubes with excessive plate current. Admittedly, lowering the plate resistor will increase the plate current to a certain extent. But if the plate current rises, so will the cathode current. This will cause a larger drop across the cathode resistor (in this case of a microphone), tending to bias the tube more. Thus the system tends to be self-adjusting. As a matter of fact, it may be comforting to know that none of the tubes shown, when used with its optimum plate resistor, draws over 10 ma. Hence the plate dissipation will never be exceeded.

In Conclusion . . .

To obtain optimum performance from a grounded-grid audio preamplifier being driven by a carbon microphone, the following is recommended:

1) If a selection of tubes is possible, use the one with the highest transconductance (G_m).

2) Find its plate resistance (R_p).

3) Use the next highest standard-value resistor as a plate resistor. Its power rating will probably be 1 watt.

4) Use no cathode resistor; connect the microphone to the cathode terminal directly.

5) If the tube gets too hot to touch comfortably (it shouldn't, but may), run up the value of the plate resistor.

6) If the plate resistor gets warm (again, it shouldn't, but may), increase its wattage value to 2 watts.

7) If rf feedback occurs, bypass the cathode to ground with a capacitance somewhere between .001 and .01 mfd.

This predicament of almost everyone using component values of grossly inferior characteristics can doubtless be blamed on these facts: no one suspected that the plate resistor could be in the least bit critical, and no one knew what the right value for a given tube type was; furthermore, few suspected that auxiliary cathode resistance is detrimental.

To reiterate, maximum output will occur when the plate load resistor is set equal to the plate resistance of the tube. The output will then be roughly proportional to the tube transconductance for a given value of high voltage. ■

The converter is constructed on a 5 x 7 inch aluminum plate. This plate is mounted on an inverted 5 x 7 x 2 inch chassis which serves as a case for the unit.

From the photos it will be noted that the aluminum plate sports a jewelers finish. This may be duplicated by placing a small piece of steel wool under your thumb and twisting it on the surface of the converter plate. With a little care and patience a very professional appearance may be had.

While this converter was designed for 50 mc there is no reason why it could not be used on 21 or 28 mc (by making the proper coil and crystal changes) with excellent results. . . . K6RNQ

Parts List

L1—10 turns #16 copper ½" diam., 1½" long.
L2, L3—8 turns #26 enamelled, closewound on ½" diam., brass slug tuned form.
L4—5 turns #26 enamelled, closewound on ½" diam., brass slug tuned form.
L5—8 turns B&W 3003 Miniductor.
L6—30 turns #30 d.c.c. closewound on ⅜" diam., iron slug tuned form.
L7—10 turns #24 enamelled, closewound at cold end of L6.
C1, C2—10 mmf. midget variable capacitor.
J1, J2—BNC type coax connectors, UG-1094/U.
X1—42 mc., third overtone crystal.

Page from a Designer's Notebook

Notes concerning the design of transistorized carbon microphone preamps

James L. Tonne W5SUC

THE most logical approach to use in such an amplifier is to use a fixed bias on the base and insert the microphone in the emitter circuit. This circuit configuration corresponds to the grounded-grid tube circuit. This type of circuit (Fig. 1) is capable of good output and quality, and draws a very low value of current from the power supply.

If an additional current drain can be tolerated, a better circuit to use is a circuit wherein the microphone forms the grounded leg of a simple voltage divider from the power supply to ground, the output of the microphone then being sent on to an amplifier. It is found that this circuit (Fig. 2) has much more output and is more stable with regard to the position of the microphone than the "grounded base" arrangement. The voltage divider configuration is a bit more complex but has a much higher output. The output from the circuit can be controlled by adding an external resistance from the voltage divider to ground. The best place to add this external resistor is from the "supplying" resistor midpoint to ground. See Fig. 3. Alternatively, the output level can be controlled in steps by using a variety of resistors for the "supplying" resistor as in Fig. 4.

If the value of the load resistor is made large in the common-base configuration, in an attempt to get more voltage gain, the microphone current is reduced and the circuit output actually drops and in addition becomes highly nonlinear. But the load resistor for the separate-amplifier circuit can be of a high value to give good voltage gain, providing only that the transistor beta holds up at low values of collector current.

If a two-stage amplifier is used, it is not recommended that direct coupling be used between stages, since the average microphone resistance must be treated as a near-unknown. Such a circuit has been built (see Fig. 5) but it was only conditionally stable. Changing the position of the microphone sometimes caused severe distortion. This particular circuit did have a very high gain, however, and clipping was obtained even with low input levels.

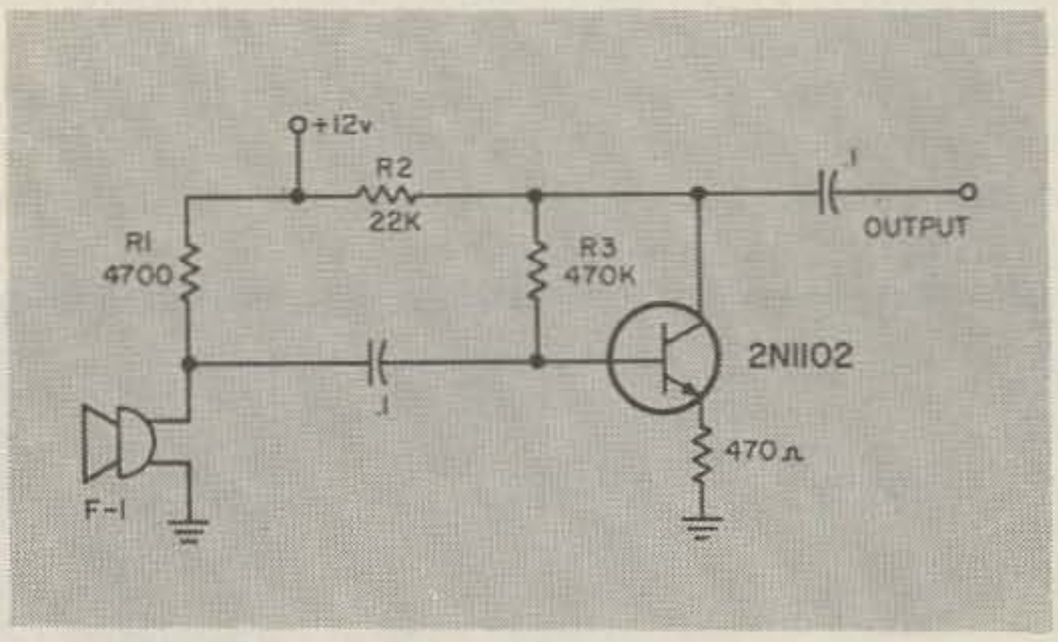

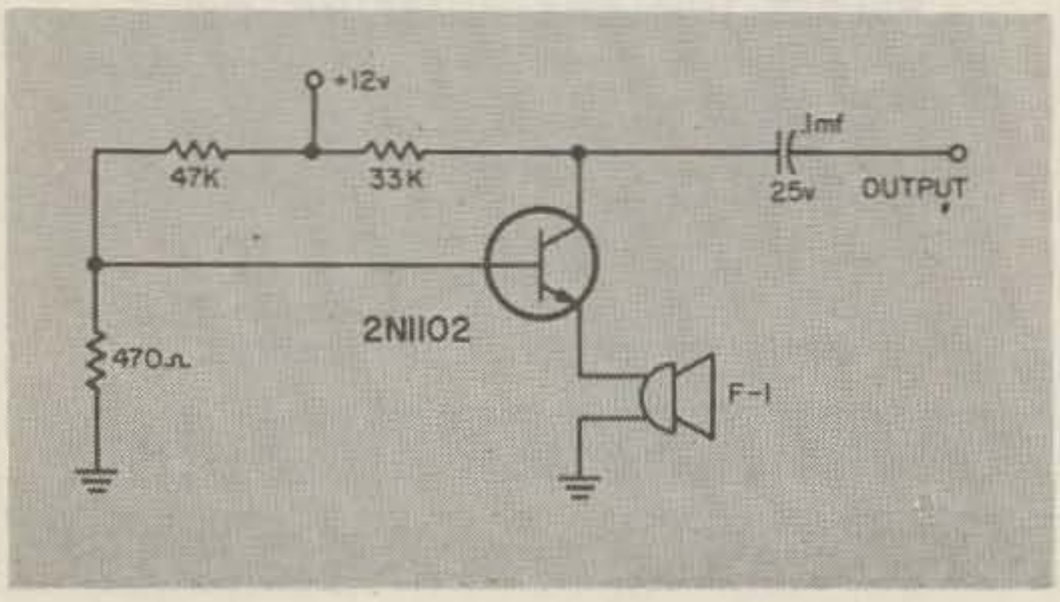

Under no conditions use a transistor as a mere current source for the microphone, and attempt to generate the output across some third element, such as a transformer. If the microphone resistance under static conditions drops to a low value, the collector current will soar. As an example of this don't, see Fig. 6.

If it is possible to add the gain control at a later stage in the amplifier, then R_1 in Fig. 2 can be adjusted once and for all and forgotten. Lowering the value of this resistor will increase the output. Increasing it will decrease the output.

It should be pointed out that the high fre-

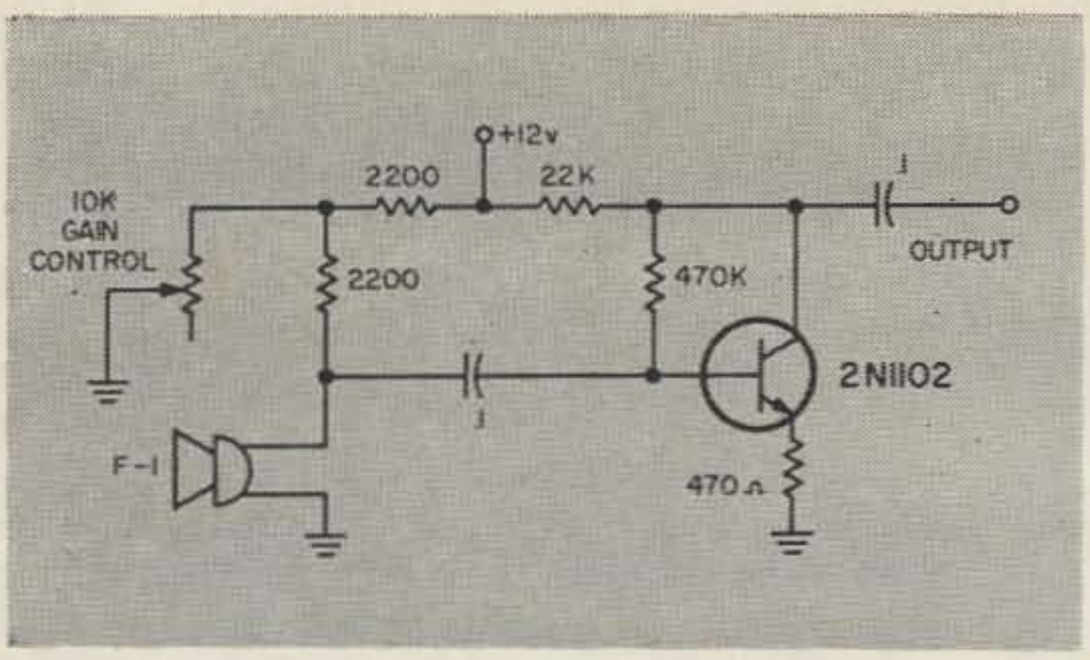

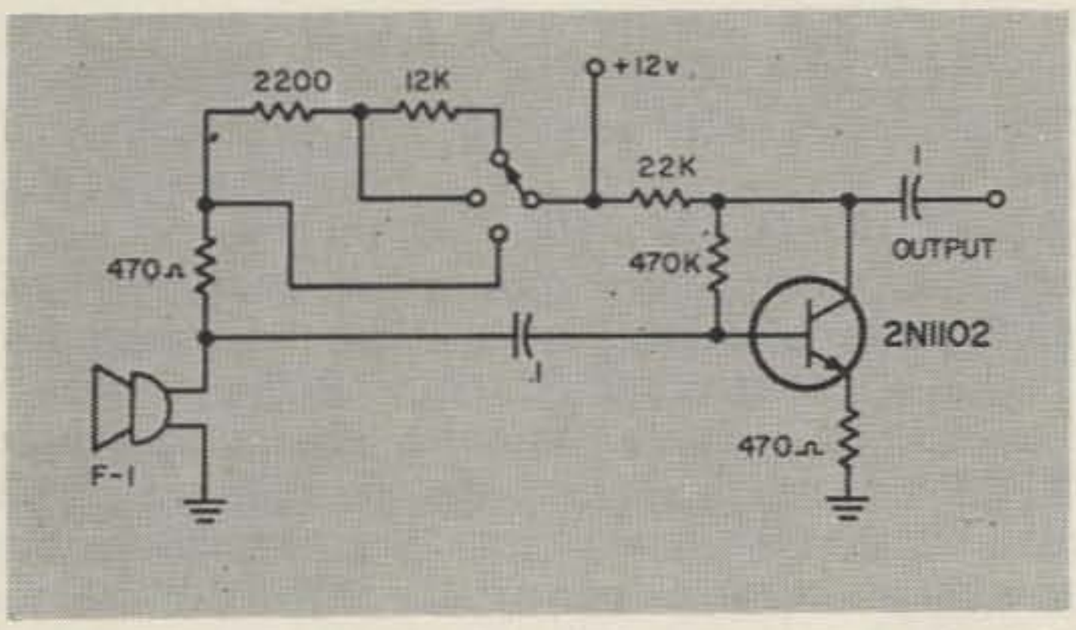

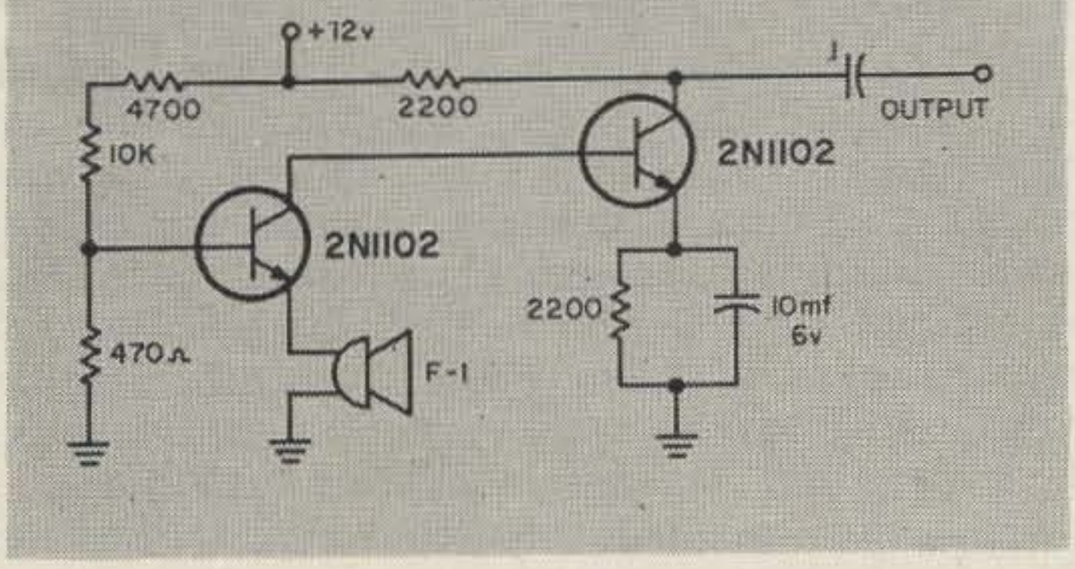

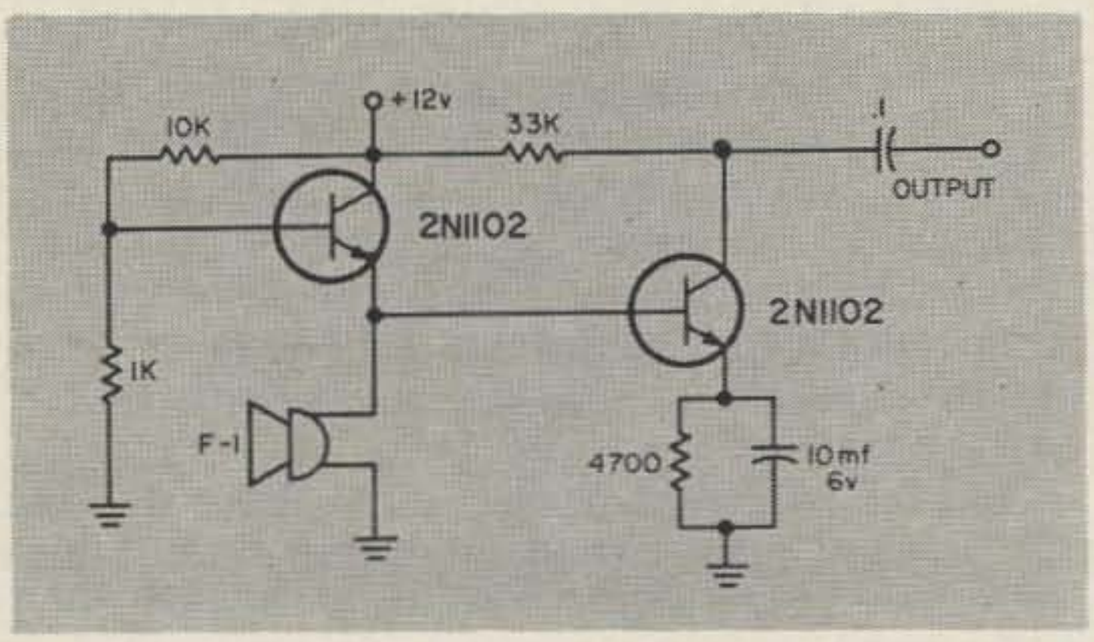

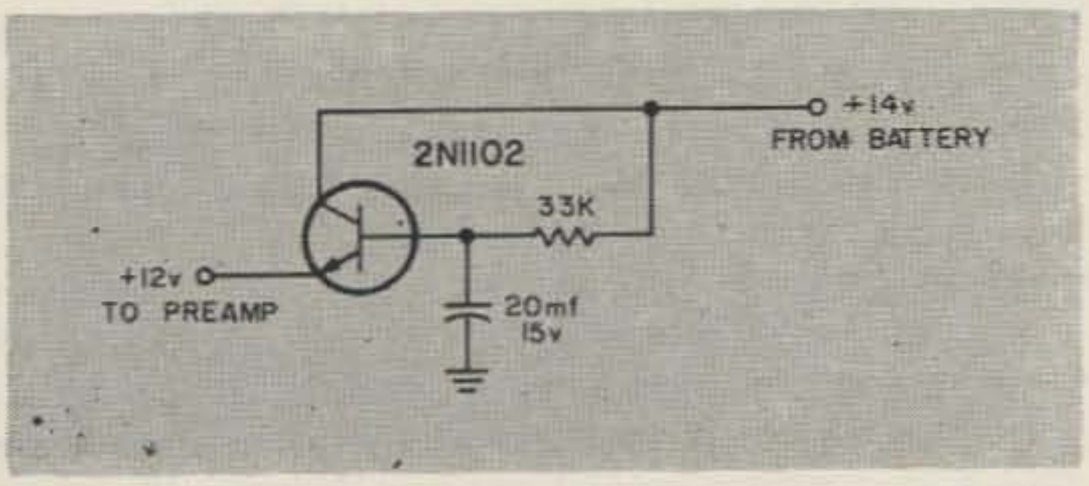

Fig. 7. A line filter to cut down on noise on the output which enters via the power source. The 33K resistor can be adjusted to adjust the output voltage.

NEW! from P&H

MODEL AR-1
TRANSCEIVER ANTENNA
TRANSFER UNIT

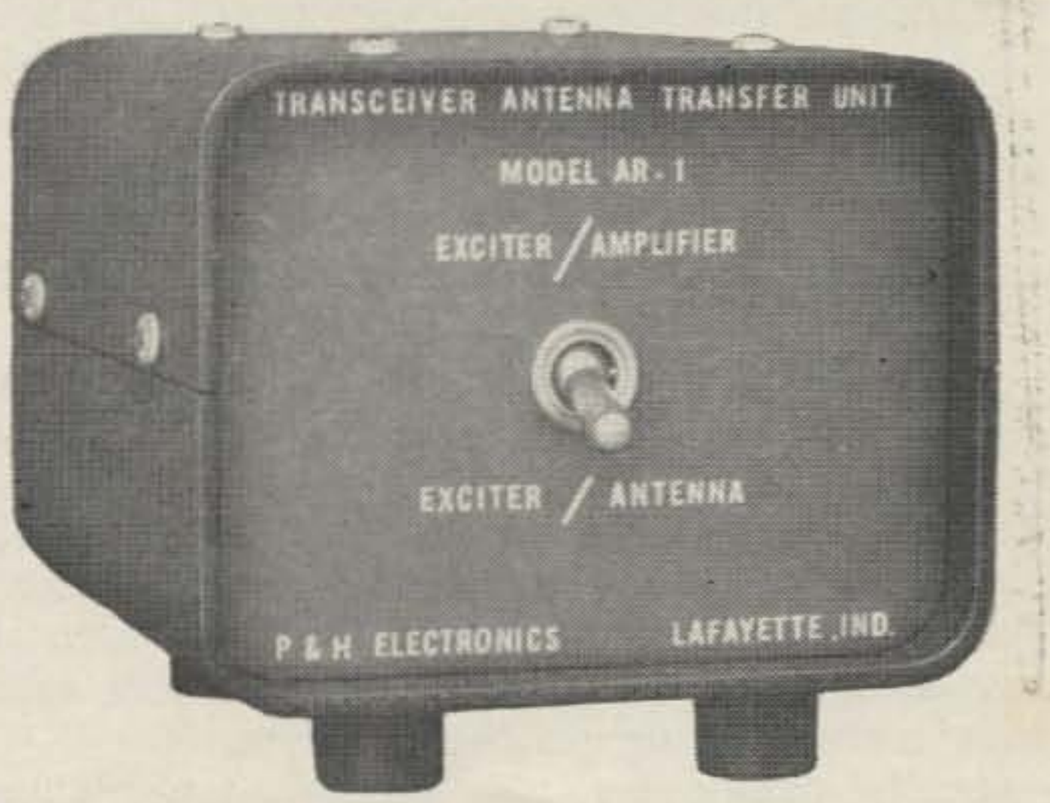

Here is the answer to the problem of using your transceiver as an exciter for any linear amplifier. The AR-1 transfers the antenna to the transceiver while receiving and provides the necessary switching to connect the exciter to the amplifier, and the amplifier to the antenna when transmitting. A front panel switch also permits the exciter to operate straight through to the antenna. The relay is shock-mounted and the case is insulated to reduce noise. Standard SO239 connectors are provided for low impedance coax lines.

LOW INSERTION LOSS: Transceiver output to amplifier input, less than 1.02:1 SWR, 3 to 30 Mc. Amplifier output to antenna, less than 1.12:1 SWR, 3 to 30 Mc.

The AR-1 requires 6.3VAC (6.3V jack on KWM-2) and normally open auxiliary contacts on the exciter relay. (ANT. RELAY jack on KWM-2). The AR-1 may also be used as a conventional antenna change-over relay. Size 3" X 4" X 4".

PRICE..... $32.50

P&H ELECTRONICS INC.
424 Columbia Lafayette, Ind.

quencies should not be filtered out by putting a condensor across the load resistor R_2 (in Fig. 2). If this is done, a severe distortion will occur at high input levels.

R_3 may need some adjustment if a transistor of unusually high beta is used. Simply adjust this resistor for symmetrical output on a scope at high signal levels.

Transistors of types 2N1059 and 2N1102 seem to work about the same. Type 2N679 seems to have a bit more gain, on the average.

The circuit of Fig. 2, then, is of reasonable simplicity, has about as much gain as most of the others, and is very stable. Output with a positive 12 volt supply is about 3 volts RMS. This circuit is to be highly recommended.

. . . W5SUC

AUDIO PREAMPLIFIER/LIMITER/PATCH

NEED MORE AUDIO GAIN in your transmitter? If so, try this versatile unit which combines a preamplifier, level limiter and handy phone patch into a single package.

SOME TRANSMITTERS just don't have enough audio amplification to provide a highly readable phone signal under today's crowded amateur band conditions. This unit overcomes these problems with a tube lineup selected for desired characteristics in each circuit. In addition, a phone patch for all-important public service work is built in.

THE SCHEMATIC DIAGRAM, FIG. 1, shows a high-impedance microphone input at J_1, coupled to the left-hand section of a 12AX7 twin triode. This tube has been designed to have a very low hum level. The output of this preamplifier drives a 6BA6 remote-cutoff pentode in the limiter. A second 6BA6 pentode is the automatic gain control tube. Negative bias for controlling the gain of the limiter stage is obtained by further amplifying the output signal in a 12AT7 twin triode and applying it to a 6AL5 twin diode. The bias is developed across the 1-megohm resistor and filtered by the .25-mfd capacitor shown just to the left of this tube.

This bias is applied to the number 3 grids of the 6BA6's and the right-hand section of the 12AX7. This triode works as a DC amplifier and the variations in plate current cause the 0–1 DC milliammeter in series with the cathode to indicate the relative amount of compression.

The phone patch circuit utilizes a three-winding transformer from the vertical oscillator of a television receiver. The telephone line connects to the medium-impedance winding, the 6BA6 limiter to the highest-impedance winding, and the speaker voice coil circuit to the lowest-impedance winding. In position "1" of S_1, the patch circuit and telephone line are not connected. In position "2," the patch operated only in one direction; it feeds the telephone signal into the amplifier. In position "3," the circuit operates as a two-way patch, also feeding the signal from the speaker circuit back to the telephone line.

CONSTRUCTION practice for this unit is pretty much the same as for the previous GADGET RACK accessories. The recommended layout for a plate-and-post type chassis is shown in FIG. 2. The unit also could be built on a 4 x 6 x 3-inch aluminum chassis with a panel 4¼ inches wide.

The only critical components are the phone patch transformer, T_1, which should be kept away from power transformers to minimize

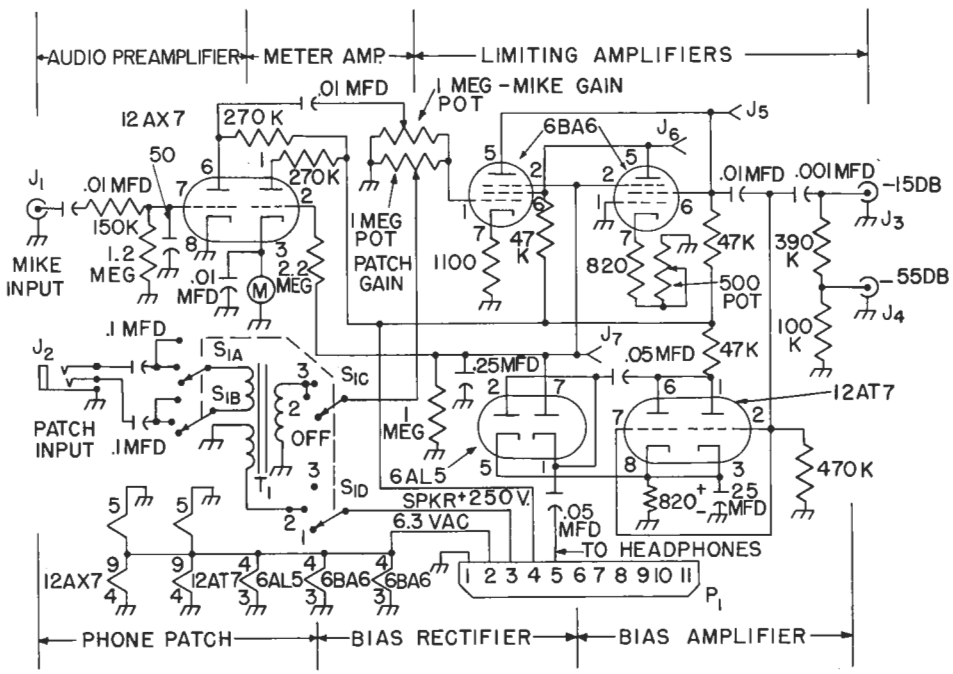

CHANNEL SPOTTER

continued from page 5

THE TUNEUP is simply a matter of applying heater power to check that circuit, and, if okay, applying plate voltage. Turn S_1 to the *100-KC* position and check for signals at multiples of 100 kilocycles on a broadcast band receiver. A broadcasting station on one of these frequencies will serve as a standard for adjusting the oscillator to precisely 100 kilocycles by turning C_1. Or, tune 100-KC position and check for signals at in the 5-megacycle signal from *WWV* and adjust C_1 until the fiftieth harmonic from the 100-kilocycle oscillator coincides with it.

Next, turn S_1 to the *20-KC* position and adjust the 2-megohm potentiometer until four signals can be counted between each 100-kilocycle marker signal on your receiver. Finally, if an oscilloscope is available, connect the vertical amplifier to pin 10 on P_1, setting the horizontal sweep for two or three cycles on the screen. The waveforms for both 20- and 100-kilocycle signals should approximate those shown in FIG. 3.

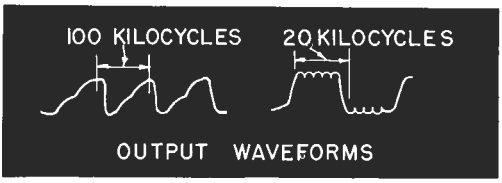

FIG. 3. OUTPUT WAVEFORMS which should be obtained at pin 10 on P_1 when S_1 is in (left) the 20-KC position; and (right) in the 100-KC position.

If you already have a 100-kilocycle frequency standard, try adding the frequency divider stage to help spot that net frequency.

hum pickup; and the meter, *M*. The meter shown on page 1 has a flange only 1¾ inches square, but the layout allows space for round or square meters having the standard body diameter of 2¼ inches. A rotary tap switch can be substituted for the lever-action switch shown for S_1 by drilling a hole ⅜ of an inch in diameter in place of the slot.

CONNECTIONS to this unit, other than those made through P_1, consist of a two-wire shielded lead from the telephone line to J_2, the microphone cord to J_1 and a shielded single-conductor lead from J_3 or J_4 to the transmitter audio input. Proper settings for the *MIKE GAIN* and *PATCH GAIN* controls is best determined by experiment. The 500-ohm potentiometer in the cathode of the second 6BA6 controls the compression level. It should be set to the highest resistance that does not result in the microphone picking up an objectionable amount of background noise in the radio shack.

FIG. 1. SCHEMATIC DIAGRAM for the combination audio preamplifier/limiter/phone patch unit. All resistances not otherwise marked are ½-watt power rating; all capacitance values not otherwise marked are in mmf. Potentiometers should have a ½-watt rating.

NOTE: If the Merit A-3001 vertical oscillator transformer is used for T_1, connections should be made as follows: Brown and black leads to J_2; red and blue leads to the PATCH GAIN potentiometer; and the yellow and green leads to the speaker circuit. Other standard transformers may have the same color-coding on leads.

PARTS LIST

J_1.....female connector to fit microphone plug.
J_2..... 3-circuit phone jack.
J_3, J_4.....midget phono type jacks.
J_5, J_6.....insulated phone tip jacks.
M.....0—1 DC milliammeter, 1¾-inch flange, 1½-inch-diameter body (Lafayette TM-11 shown on model G.E. type DW-91 also suitable.
P_1.....11-prong male octal plug (Amphenol 86-PM11).
S_1.....4-pole, 3-position, non-shorting lever action switch (Mallory 6243; or use equivalent single section rotary tap switch).
T_1.....three-winding vertical output transformer (Merit A-3001, or equivalent).

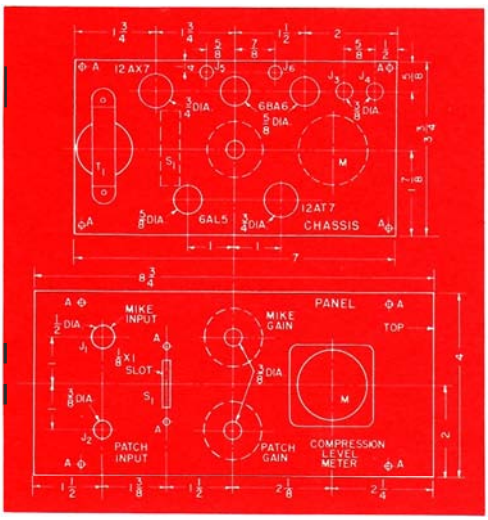

FIG. 2. PANEL-CHASSIS LAYOUT diagram. The panel plate is viewed from the front; chassis plate from the rear. Drill mounting holes to match feet on T_1 and locate it between the plates if possible. Holes marked "A" are for corner posts, which should be 3 inches long, tapped at both ends.

HAM NEWS
TUBES
JANUARY-FEBRUARY, 1961



THE OMNIVOX

THE OMNIVOX is a feature packed simple, flexible audio preamp/vox/transmitter control and phone patch unit. Integrated into this design project are the following author's dozen features:

1. 6BN6 gated beam VOX tube for positive anti-trip.
2. Automatic Level Control (ALC) of audio amplifier for uniform modulation from microphone and telephone inputs.
3. Hybrid phone patch with 6AL7-GT twin indicator tube to monitor voltage into line and ALC operation.
4. Individual phone and master gain controls.
5. Adjustable VOX Sensitivity, anti-trip and holding time controls.
6. Manual or automatic VOX control.
7. Shaped audio band-pass from 250-3000 cps.
8. Visual indication of ALC bus voltage.
9. Visual indication of "zero-beat" for on-the-nose net operation.
10. Peak compression circuit.
11. Zero audio output until control relay operates.
12. Speaker output attenuated automatically in "Patch On" position.
13. Auxiliary audio output position (with attenuated speaker output) for recorder or oscilloscope.

(continued on page 2)

W4PFQ MONITORS PHONE PATCH being handled through the OMNIVOX (just below receiver) installed in his station. Operating console also includes transmitter exciter (next to receiver), and — on lower level — speaker, power control panel (center) and audio system for transmitter. Large cabinet at left houses a final amplifier with pair of GL-813's, plate modulator and power supplies. W4PFQ operates principally on double sideband.

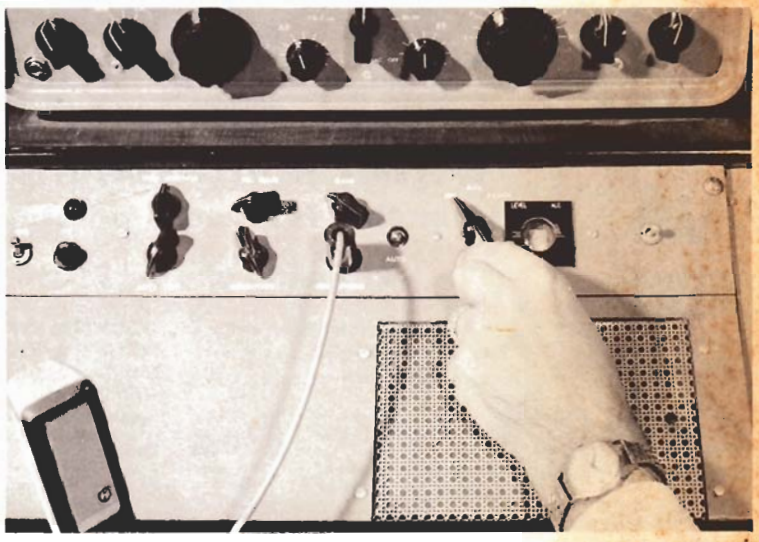

CLOSE-UP VIEW of the OMNIVOX centered on a 3½ x 19-inch rack panel. Switch, fuse and pilot light at left control external power supply for the OMNIVOX.

IN THIS ISSUE

OMNIVOX ..... page 1
VERSATILE POWER-CONTROL BOX ..... page 7
SCANNING THE SPECTRUM ..... page 8

Copyright 1961, by General Electric Company

OMNIVOX (continued from page 1)

A block diagram of this system is shown in Fig. 1. Only four tubes are needed in the functional amplifier and control stages. In addition, a 6AL7-GT twin indicator tube provides constant monitoring of the signal applied to the telephone line when using the phone patch. The indicator tube provides a sensitive means for determining optimum balance of the hybrid circuit, gives a visual indication of "zero-beat" and furnishes an indication of the amount of ALC voltage developed.

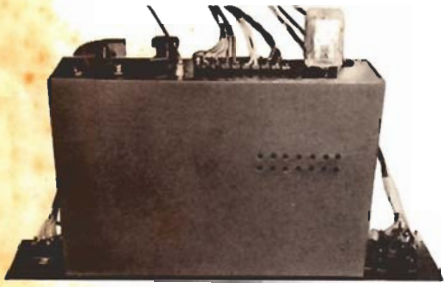

TOP VIEW of the OMNIVOX model with chassis cover in place. Vent holes in cover and chassis deck provide air circulation around tubes.

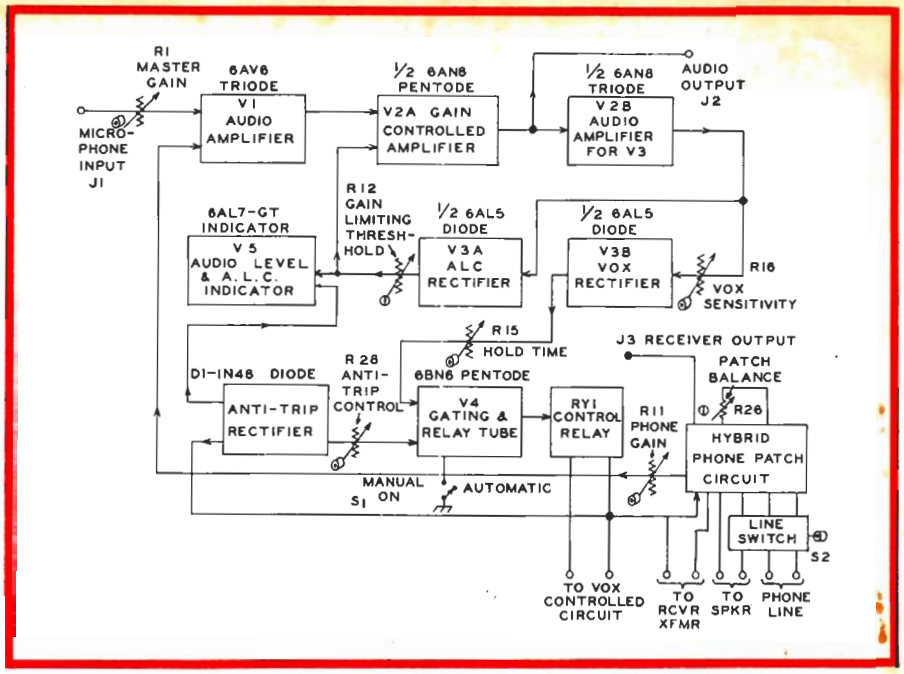

FIG. 1. BLOCK DIAGRAM of the OMNIVOX circuit, showing audio amplifier at top, bias rectifier and indicator tube at center, VOX circuit at bottom and hybrid phone patch at lower right corner. All controls except **Gain Limiting Threshold** (R_{12}), **Calibrate** (R_{35}) and **Patch Balance** (R_{26}) are on the front panel.

The gain of the audio system is about 70 decibels, providing adequate amplification from a crystal or other high impedance low level microphone to yield 22 volts at the audio output terminals when no ALC voltage is developed.

The input amplifier in the schematic diagram, Fig. 2, is driven through the master gain control (R_1) which provides the load for the crystal microphone. It also acts with R_2 and R_{11} as a voltage divider to control the amount of telephone signal fed to V_1.

Preamplifier V_1 drives the pentode section of a 6AN8 (V_{2A}), connected as a gain controlled audio amplifier. Inter-stage coupling capacitors C_2 and C_3 provide low frequency attenuation. Circuit and tube capacitances coupled with C_5 provide high frequency attenuation, resulting in the audio frequency response characteristic shown in Fig. 3.

The output circuit of V_{2A} is composed of R_7, C_7, C_8, R_9 and R_{10} in series with the load connected to the output jack (J_2) and the input impedance of V_{2B} connected through R_{20}. When the OMNIVOX is in the "receive" (RY_1 not energized) condition, the audio output jack (J_2) is grounded through one of the normally closed contacts of RY_1.

Thus, no audio output can appear at J_2 from the speaker feeding into the microphone, even though both audio stages may be operating at full gain. The paralleled resistance of R_9 and R_{10} is 50,000 ohms, and this, in shunt with R_7, provides a load resistance of 33,000 ohms for V_{2A}. The audio voltage developed across this load resistance is coupled to V_{2B} to provide additional gain for the rectifier circuits of V_3 which provide a positive voltage from V_{3A} for driving the gating tube (V_4), and a negative voltage from V_{3B} for the ALC bias on V_{2A}.

In addition, should the positive going output of V_{2A} exceed the 7.5 volts developed by R_{21} and C_{14} in the cathode circuit of V_{2B}, the 47,000-ohm resistance of R_{20} is shunted across the plate load to reduce the peak gain and provide moderate limiting action. Should greater clipping be desired, R_{20} can be reduced. The peak voltage at which clipping begins can be adjusted by changing the value of R_{21} to develop more or less DC voltage. (It is recommended that R_{21} be no less than 600 ohms.)

THE OUTPUT OF V_{2B} is coupled through C_{13} to V_{3A} where it is rectified and filtered through C_{10}, R_{21}, R_{37} and C_4 to provide a negative voltage proportional to the amplitude of the

HAM NEWS — TUBES

presents* HOW-TO-DO-IT IDEAS *from the 999 radio amateurs at

GENERAL ELECTRIC

A bi-monthly publication of the RECEIVING TUBE DEPARTMENT
Owensboro, Kentucky, U. S. A. • Editor — E. A. Neal, W4ITC

G-E HAM NEWS is available free from authorized **G-E Tube** distributors. Some distributors mail copies locally to their customers.

A low-cost direct-mail subscription plan is available to persons residing in the United States and its possessions (including APO and FPO numbers).

Subscription rates are:

One Year (6 issues)	$1.00
Two Years (12 issues)	$2.00
Three Years (18 issues)	$3.00
Five Years (30 issues)	$4.00

Enclose check or money order for U. S. currency for the proper amount above made payable to "General Electric Company."

Residents of Canada may subscribe to **G-E HAM NEWS** for $1.00 per year from the Canadian General Electric Company, Ltd., Electronic Tube Marketing Section, 189 Dufferin Street, Toronto 3, Ontario, Canada. Enclose check or money order made payable to: "Canadian General Electric Company, Ltd."

Distribution of **G-E HAM NEWS** in more than 40 foreign countries is handled through the International General Electric Company. A listing of outlets is available from the **G-E HAM NEWS** office. Or, write to: Customer Inquiry Section, International General Electric Company, 150 East 42nd Street, 7th Floor, New York 17, New York, U. S. A.

NOTE: The disclosure of any information or arrangements herein conveys no license under any patents of General Electric Company or others. In the absence of an express written agreement to the contrary, the General Electric Company assumes no liability for patent infringement (or any other liability) arising from the use of such information by others.

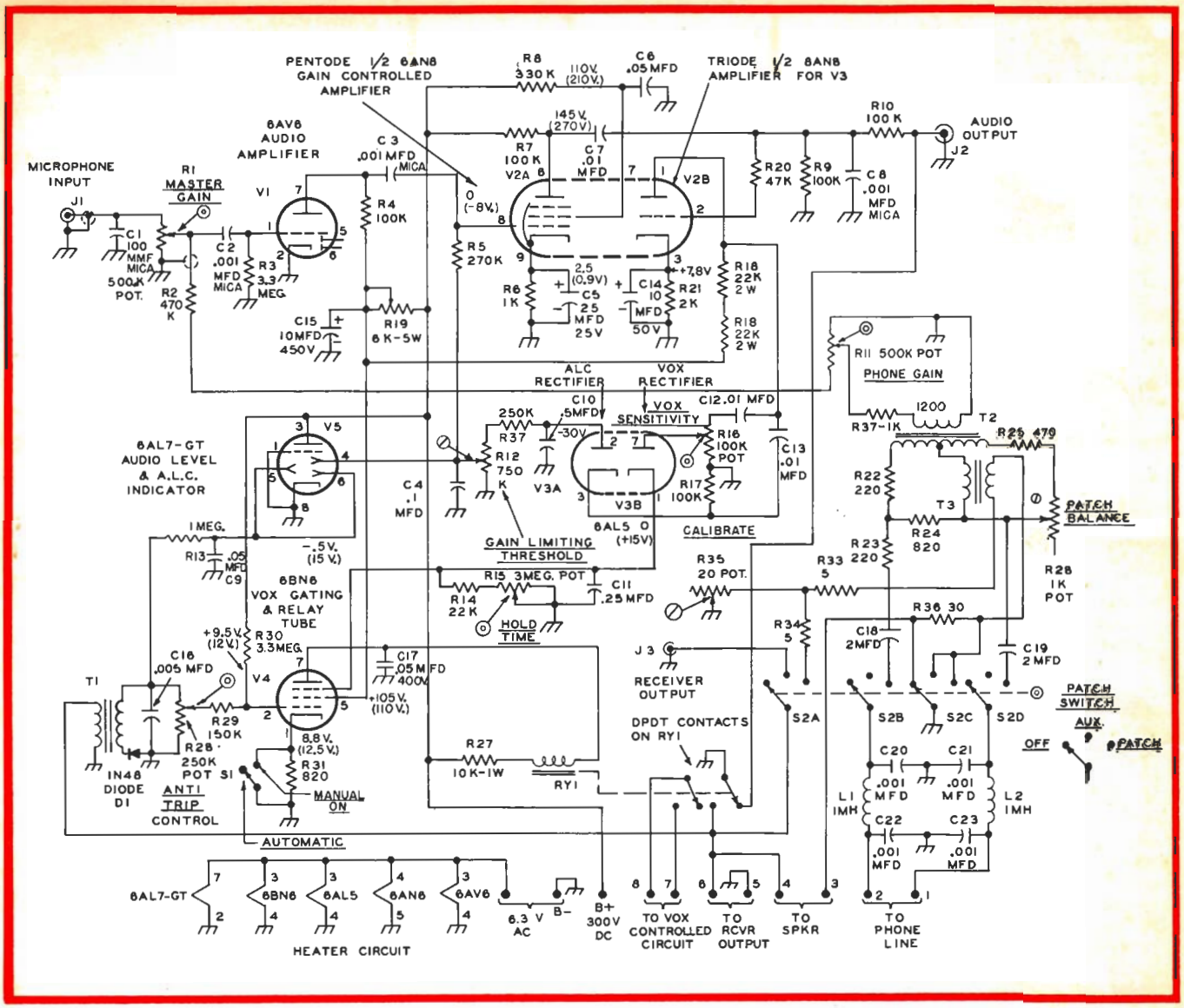

audio output. When this voltage is fed back through R_5 to the grid of V_{2A}, the operating point of this tube is shifted to reduce the gain of the stage. By adjusting the *Gain Limiting Threshold* control, the amount of audio limiting can be varied over a wide range.

The circuit is fast acting and has a control range of more than 20 decibels with a normal threshold setting about ⅓ open, as shown in Fig. 4. The control voltage is monitored by one section of V_5 and provides a relative indication of the output voltage from V_{2A}. Rectifier V_{3B} is driven from amplifier V_{2B} through C_{12} and the VOX *Sensitivity* control (R_{16}). The DC output of this circuit is developed across R_{14} and R_{15} and charges C_{11} to provide a positive gating voltage for control tube (V_4).

Output from the receiver is applied to the primary of T_1 (a

(continued on page 4)

FIG. 2. COMPLETE SCHEMATIC DIAGRAM of the OMNIVOX. Only those parts which require additional identification are shown in TABLE I — PARTS LIST. Resistances are in ohms, ½ watt rating and ± 10 percent tolerance, unless otherwise marked. Capacitances are in microfarads (mfd), paper types of 600-volt DC rating, except where noted. Base pins of tube diagrams are numbered.

TABLE I — PARTS LIST—OMNIVOX

C_5.....25 mfd, 25-volt electrolytic.
C_{14}.....10 mfd, 25-volt electrolytic.
C_{15}.....10 mfd, 450-volt electrolytic.
J_1.....Chassis type microphone jack.
J_2, J_3.....Chassis type 1-pin phono jacks, or phone jacks.
L_1, L_2.....1-mh pi-wound r.f. chokes.
R_1, R_{11}.....500,000-ohm potentiometer, linear taper.
R_{15}.....3-Megohm potentiometer, linear taper.
R_{16}.....100,000-ohm potentiometer, linear taper.
R_{19}.....6,000-ohm, 5-watt adjustable wire wound resistor.
R_{20}.....1,000-ohm potentiometer, linear taper.
R_{28}.....250,000-ohm potentiometer, linear taper.
R_{37}.....20-ohm wire wound potentiometer.
R_{Y1}....DPDT relay, 5,000-ohm 8 ma coil, 8-pin octal plug-in base (Potter-Brumfield KCP-11-5000 DC)
S_1.....SPST toggle switch.
S_2.....4-pole, 3-position rotary tap switch.
T_1.....4-watt universal audio output transformer, 10,000-ohm primary to 3.2-ohm secondary.
T_2.....matching transformer, 1200-ohm primary, 600-ohm secondary with precision electrical center tap.[1]
T_3.....matching transformer, 500-ohm primary, 4-ohm secondary.

[1]Transformer T_2 in the author's model was obtained from a Signal Corps RM-52 Remote Control Unit, part of field telephone equipment which is available from several war surplus electronics distributors. T_2 is labeled "UTC 83718-C-280A."

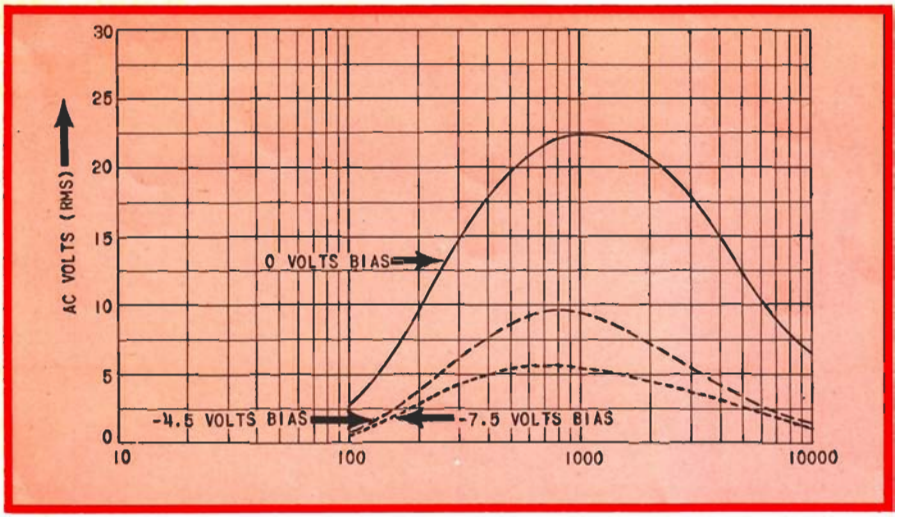

FIG. 3. **AUDIO FREQUENCY** response characteristic of the preamplifier. Curves show change in output level at constant input level with different values of ALC bias. When converted to decibel scale and normalized, all three curves nearly coincide. This indicates that the bandpass remains constant over wide gain variations.

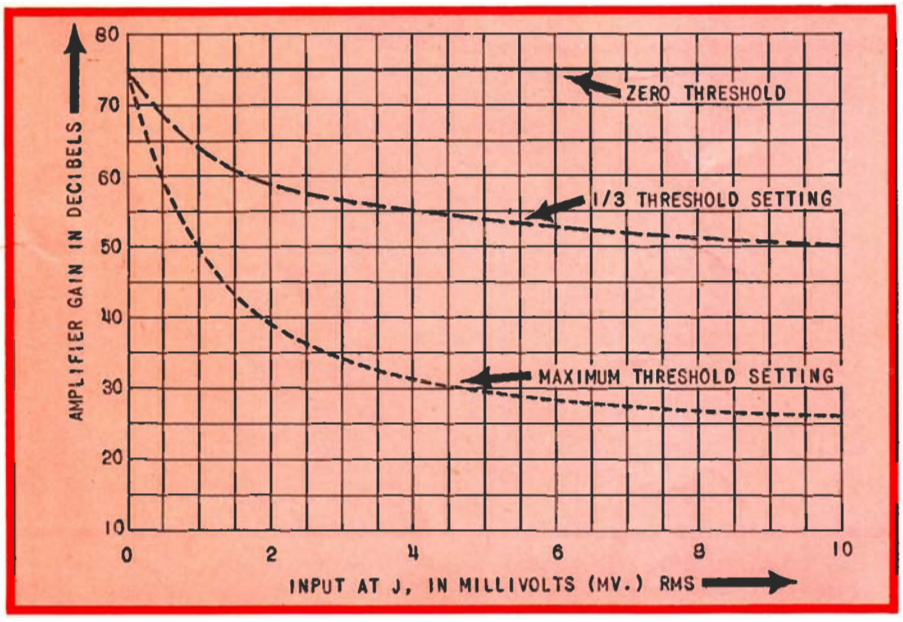

FIG. 4. **GRAPH SHOWING** range of control provided by ALC system over range of zero threshold voltage, to full threshold voltage.

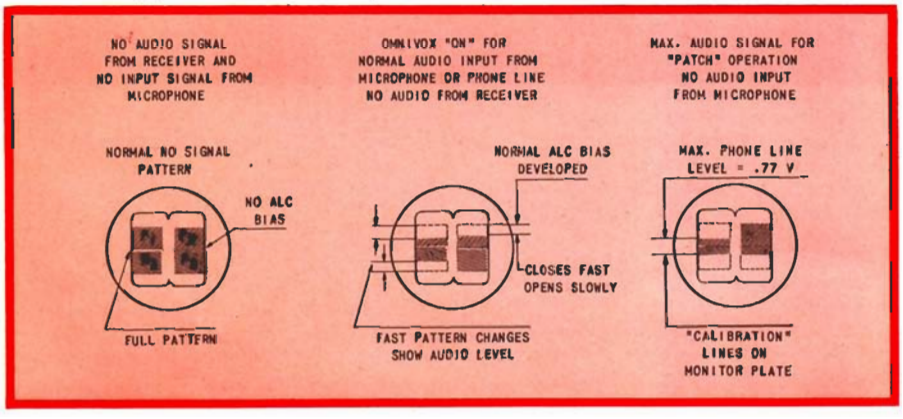

FIG. 5. **PATTERN SHOWN** on 6AL7-GT indicator tube (V_3) with (left) no audio signal; (middle) audio signal compressed normal amount, with left hand pottern changing at syllabic rate, and right hand pottern changing at slow rate with voriations in ALC bias. Maximum phone line level of 0.77 volt is shown in pattern view at right.

OMNIVOX (continued from page 3)

small output transformer operated backwards), where it is stepped up and rectified by a 1N48 diode (D_1). The voltage developed across C_{16} and R_{28} provides negative going pulses of voltage which are superimposed on the positive DC voltage on the No. 1 grid of V_4 by adjusting the *Anti-Trip* control (R_{25}). An additional RC filter (R_{13} and C_9) provides a DC voltage to the deflection electrodes of V_5 which is proportional to the peak audio voltage delivered by the station receiver to the OMNIVOX. Thus the pattern of three sections of V_5 compresses as more audio voltage is fed from the receiver, as shown in Fig. 5.

HEART OF THE CONTROL SECTION of OMNIVOX is the 6BN6 gated beam tube (V_4). This tube is constructed in such a way that its plate receives current only when *both* of the grids are cut on. Thus an anti-trip voltage at the No. 1 grid can cut off the beam and, regardless of the amount of positive voltage on the second control grid, the plate cannot draw current. By this means, anti-trip action is not a matter of delicate balance between opposing voltages.

The 6BN6 (V_4) operates with nearly constant cathode current, developing 9.5 volts across R_{31}, and providing cut-off voltage for the second control grid. The first grid is connected to a voltage divider made up of R_{30}, R_{29} and R_{28} from plus 300 volts to ground, and is clamped at zero bias. Thus, in the absence of anti-trip voltage derived from receiver output, the input gate is open.

Since the second grid is cut off, no plate current flows until audio voltage applied to V_{3B} develops a positive gating bias at the 6BN6's second grid. This starts plate current flow in the 6BN6, causing R_{Y1} to close. Its DPDT contacts unground the audio output signal from V_{2A}, mute the speaker and close the external VOX control circuit on terminals 7 and 8.

The gating bias remains on the second control grid of V_4 as long as there is sufficient positive voltage across C_{11}. The *HOLD* control (R_{15}) adjusts the discharge time of C_{11}. Space charge effects in V_4 further modify the discharge characteristics so that the components specified give a range of *Hold* from milliseconds to continuously *on*. In the *Manual* position of S_1, the cutoff bias for the second gating grid is removed and closes R_{Y1}.

THE PHONE PATCH SECTION of OMNIVOX is a hybrid circuit made up of a pair of transformers, a balancing network, cou-

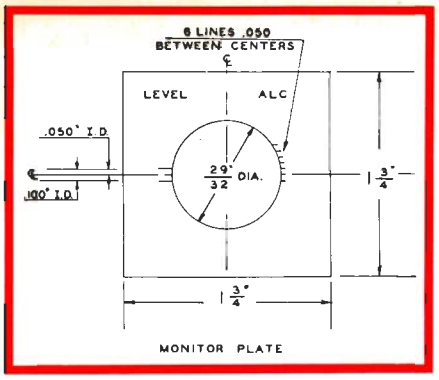

FIG. 6. **DIMENSIONAL DIAGRAM** of the escutcheon plate for the 6AL7-GT (V_5) indicator eye tube. Calibration marks at left are for maximum phone line level of 0.77 volt. Material used is $\frac{1}{16}$-inch thick black bakelite.

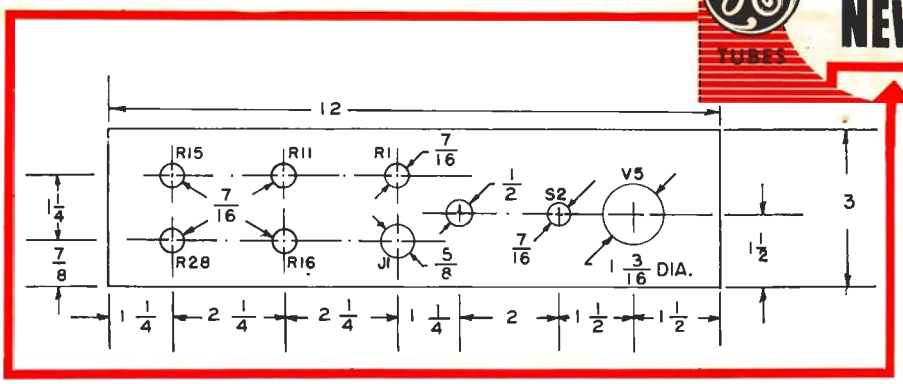

FIG. 7. **DRILLING DIAGRAM** for the chassis and front panel of the OMNIVOX. Dimensions can be changed to suit individual layout needs, but should follow the same pattern. Small holes for mounting hardware are not shown.

pling capacitors and a pi-section RF filter for the phone extension line. In the *OFF* position of S_2, the patch is off and is completely out of the circuit (with the exception of the RF filter which is left in at all times). In the *AUX.* position of S_2, the receiver output is switched to the *Receiver Output* jack (J_3). Simultaneously a 30 ohm resistor is connected in series with the speaker voice coil to attenuate the audio output about 10 decibels.

In the *PATCH* position of S_2, the hybrid transformers are connected to the telephone line through low-leakage paper coupling capacitors (C_{15} and C_{19}). In addition, while the speaker remains attenuated, a *Tee* network is connected between the receiver output and the primary of T_3, which couples audio from the receiver to the telephone line.

Earlier, it was explained that the 6AL7 (V_5) was driven by a negative voltage proportional to the peak receiver output voltage. In the PATCH-ON position of S_2, R_{35} (in the Tee network) can be adjusted so that the maximum audio voltage supplied to the 'phone line is equal to the maximum allowable line voltage (usually about 0.77 volts) for a specific amount of pattern compression on V_5. The escutcheon plate shown in Fig. 6 is marked for this purpose. Once this calibration has been accomplished, the 6AL7-GT eye tube monitor provides a direct means for checking the audio level to the line. This makes it possible for the operator to adjust the station receiver audio output to the proper patch operating level.

The *Balance* control (R_{26}) is used to adjust the current flow through the two sections of the primary of T_2 due to the presence of voltage across the secondary of T_3, so that receiver output is not coupled through T_2 to the audio amplifier section of OMNIVOX. To adjust R_{26}, the patch is switched on (after you have dialed an understanding friend on the land line) and the *Phone Gain* control (R_{11}) is opened to impress voltage from the secondary of T_2 on V_1. Receiver output is being fed into T_3 in this case and the circuit may tend to oscillate unless the *Sensitivity* control (R_{16}) is at minimum gain.

With the *Threshold* control (R_{12}) about mid-point, the *Patch Balance* control (R_{26}) may be adjusted slowly until the ALC monitoring section of V_5, indicating the amount of audio voltage out of V_{2A}, shows zero output voltage. The *Master Gain* control (R_1) may be opened further to increase the system gain for more precise balance. Although this adjustment is quite sensitive, the visual indication provided by V_5 makes this a simple operation. Following the balancing of the hybrid circuit, the calibration of phone line voltage versus V_5 pattern compression should be rechecked.

The OMNIVOX may now be operated from the phone line by adjusting the *Master Gain*, *Phone Gain* (R_{11}), and *Sensitivity* controls (R_{16}) appropriately. Slight compression of gain by ALC action from the voice input on the line should be indicated by V_5. When the microphone in the telephone is providing the audio signal, the ALC will reduce the gain of V_{2A} (depending on the setting of the *Threshold* control) so that the audio output is not excessive even though the output from the handset is many times greater than the usual 'phone line signal.

Note that the reduced speaker output in the *Patch-ON* position of S_2 helps prevent audio feedback from speaker to the telephone microphone. Changing S_2 from *"Patch-ON"* to

(continued on page 6)

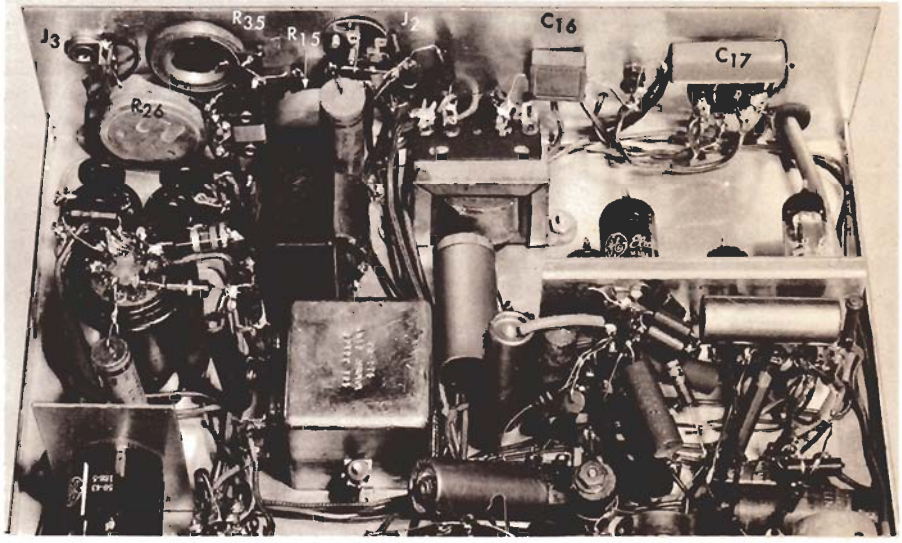

INSIDE VIEW of the OMNIVOX built in an 8 x 12 x 3-inch deep chassis box, looking toward rear side. Locations of major parts should follow the same general layout. Point-to-point wiring method was used, with terminal strips supporting clusters of small components near sub-chassis at right, and phone patch section at left.

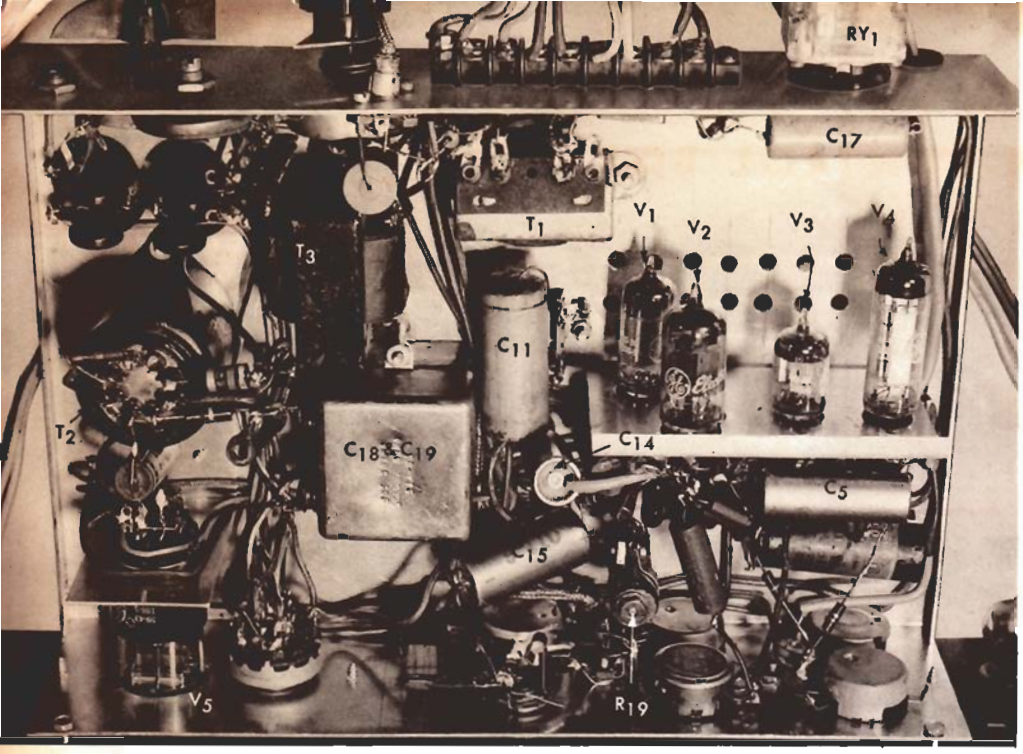

BEHIND-PANEL DETAILS are shown in this view. A small bracket made from $\frac{1}{16}$-inch thick sheet aluminum supports the socket for the 6AL7-GT indicator eye tube at left. The phone line isolating capacitors (C_{18} and C_{19}) are stacked and fastened with long machine screws at center of chassis.

OMNIVOX (continued from page 5)

"*Aux.*" provides an immediate disconnect between the phone line and the patch circuit without a blast from the speaker. When running a phone patch through the OMNIVOX, the positive gating action of the VOX control tube and the easy shift from automatic to manual control, provide sufficient flexibility to meet the variety of operating conditions and degree of familiarity with patch procedures likely to be encountered.

The 6AL7-GT monitoring indicator is also useful for frequency checking and zero-beating to net or roundtable frequencies. Since the indicator is DC-coupled to the 1N48 anti-trip diode, and the time constant of the filter is relatively short, the compressed pattern opens abruptly as zero-beat is approached between the received signal and the beating signal from a transmitter VFO, crystal calibrator, or interpolation oscillator.

It is possible to *see* the beat note down to about 2 cps with this system (this is usually close enough for most tuning). In order to use this feature on SSB it may be necessary to insert some carrier while setting the transmitter on frequency. For DSB (used by the author), or for AM, carrier is readily available at the operating frequency.

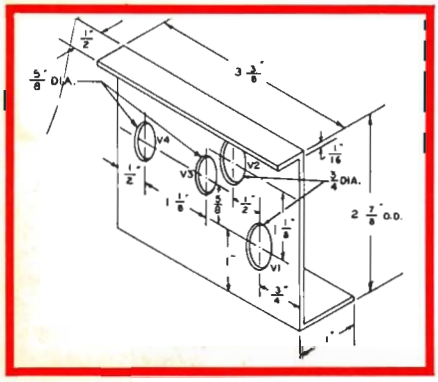

FIG. 8. LAYOUT DIAGRAM for the subchassis on which the four miniature tubes are mounted. A sheet of $\frac{1}{16}$-inch thick aluminum 4½ x 3⅜ inches is required.

CONSTRUCTION of the author's model OMNIVOX was accomplished in an 8 x 12 x 3-inch chassis.

The pictures of the completed unit on pages 2, 5 and 6 show most of the pertinent constructional details. A smaller chassis size could be used if smaller parts than those from the author's junk box are available.

Controls which may be used during normal operation were mounted on the front side of the chassis in the locations shown in the drilling diagram, Fig. 7. The four control tubes (V_1 to V_4) were mounted internally on a small sub-chassis bracket running parallel to the front panel. Fabrication details of this bracket are shown in Fig. 8. The 6AL7-GT indicator tube (V_5) is mounted on another bracket made from $\frac{1}{16}$-inch thick sheet aluminum, located so that the tube protrudes through the $1\frac{3}{16}$-inch diameter hole in the chassis front (and panel, too).

An 8-terminal barrier strip for external signal connections, the *Gain Limiting Threshold* (R_{12}), *Patch Balance* (R_{28}) and *Calibrate* (R_{32}) controls, the *Receiver Output* (J_3) and *Audio Output* (J_2) jacks, and control relay (R_{Y1}), are mounted on the rear side of the chassis. Power for the heater and plate power come in on a 4-wire cable.

Almost all wiring is run with insulated hookup wire. Leads from J_1 to R_1, R_1 to the control grid of V_1, and to the *Phone Gain* control (R_{11}) are run with shielded single conductor wire. Small parts are mounted on lugs of components they connect with, and on terminal strips.

TESTING THE OMNIVOX, when completed consists of connecting it to a power supply furnishing 300 volts DC at 40 milliamperes, and 6.3 volts at 2 amperes. The audio section should be checked out first, and then bias voltage measurements in the ALC circuit are taken to check its operation.

The VOX circuit should then be tested, and calibration of the indicator eye tube is completed. Instructions for adjusting the various controls have been given heretofore in the description of the OMNIVOX circuits, and will not be repeated here. Balancing and testing of the *Phone Patch* circuit should be done last after the other adjustments have been completed.

Finally the chassis cover plate is installed with self-tapping screws, and the OMNIVOX is installed in the position it will occupy in the station. The package has been designed so that it can set under, or on top of, a receiver, speech amplifier, etc. Or, it can be stood on end between units on the operating desk. If the latter position is chosen, vent holes should be drilled in the chassis sides which form the bottom and top. Small rubber feet also should be secured to the bottom side.

Operation of OMNIVOX is pretty much automatic once the *Microphone Gain*, *Telephone Gain*, and *VOX Sensitivity* controls have been set. The *Anti-Trip* control should be adjusted so that speaker noise does not actuate the *VOX* circuit. The *Hold Time* control should be set to individual tastes, with sufficient hold in time so that R_{Y2} remains closed between spoken sentences.

Portions of the OMNIVOX circuitry may easily be adapted to existing transmitter audio equipment, if desired. The audio gain-controlled amplifier, with its speech frequency range emphasis, and the VOX circuits too, are superior to similar circuits found in some commercial transmitters.

Improve your amateur station by incorporating the complete OMNIVOX, or portions of the circuit, into your equipment.

The Audio Booster

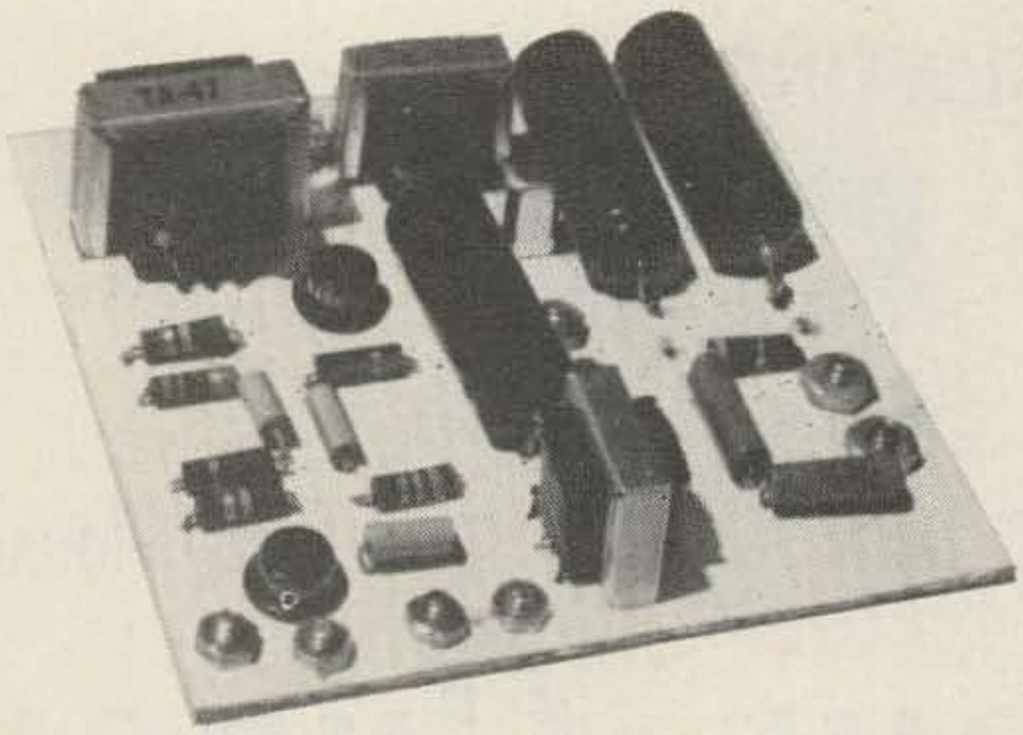

Jim Kyle, K5JKX/6
11953 Cameo Place
Granada Hills, Calif

How would you like to have 100 percent modulation at all times, instead of just on peaks?

Here's a gadget that hangs between your mike plug and the transmitter input that can do just that for you[1]. It's based on an unusual telephone-repeater circuit developed for use on a 26-mile intercom line. Addition of a gain-controlling channel produced The Audio Booster.

The original circuit was unique in that it amplified signals passing in either direction over the line, and had only one set of terminals which doubled as input and output. This feature has been retained, in case your rig puts an audio signal back into the microphone.

The quickest way to analyze circuit operation is to take a look at the block diagram, Fig. 1, and the input-bridge simplified schematic, Fig. 2, while reading the following paragraphs.

---

[1]You don't really want to adjust it that way, though. It would wipe out all amplitude variation, leaving only the frequency components to carry your voice, and the result is completely unintelligible!

Looking at Fig. 1, you'll see that a signal coming from the microphone passes through the input-bridge to the input sides of both amplifiers. Amplifier No. 1 boosts the signal some 40 db, then rectifies it to produce a positive control voltage. This control voltage is applied to Amplifier No. 2 to adjust its gain. With a strong signal, representing an audio peak, the gain of Amplifier No. 2 can be reduced to zero. With a weak signal, however, Amplifier No. 2 can produce some 50 db gain.

The amplified output from No. 2 is returned to the input-bridge circuit, from which it goes on to the transmitter. You can see that a strong signal, or peak, will not be affected by the presence of the Booster. Weaker signals, or "valleys", though, will receive some 40 db of boost. Since the dynamic range of your microphone's output is probably only about 20 to 25 db, this means that you have the ability to turn speech "inside out" amplitude-wise, if you like. By adjustment of the limiting threshold control in the AGC line, however, you can keep the signal right side up while reducing the dynamic range to only 3 or 4 db if you like.

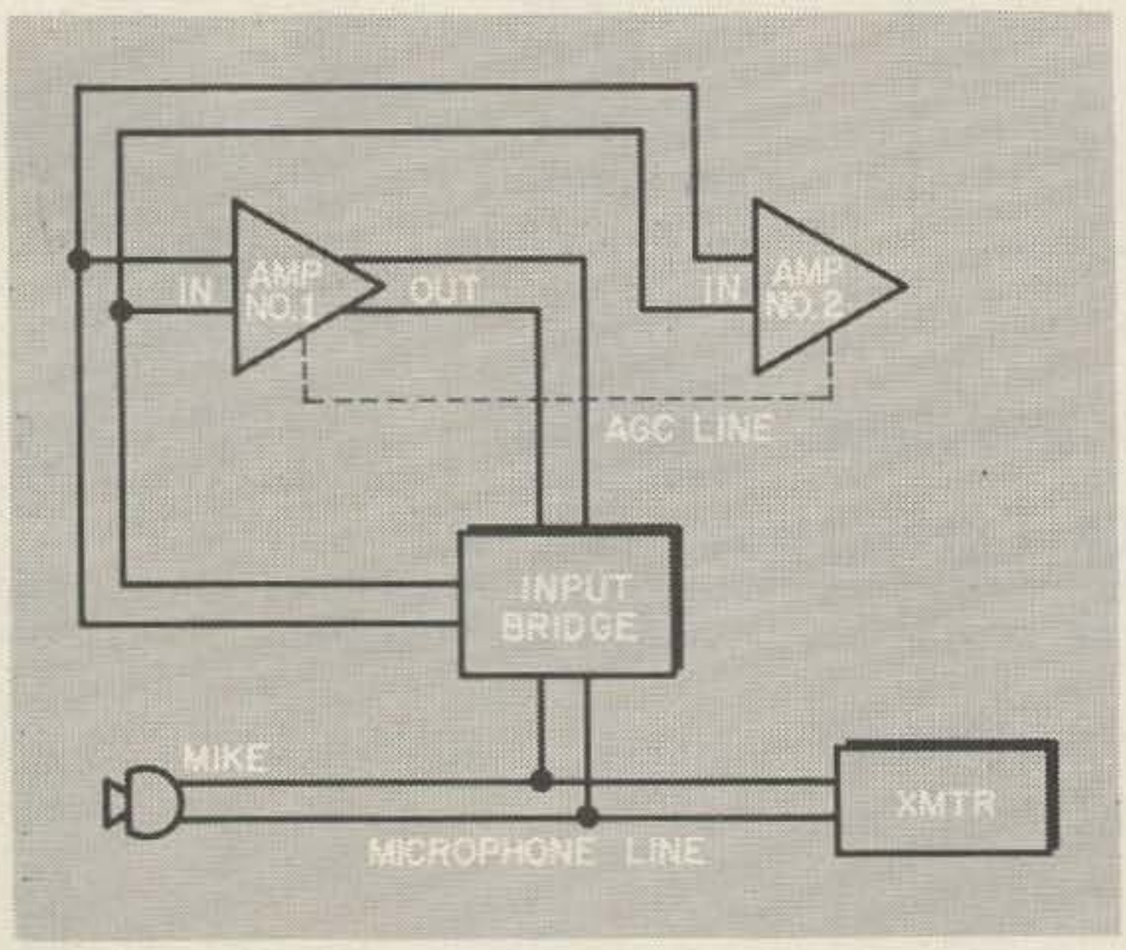

Fig. 1. Block diagram of the Audio Booster and its tie-in to your audio system. Operation is explained in the text.

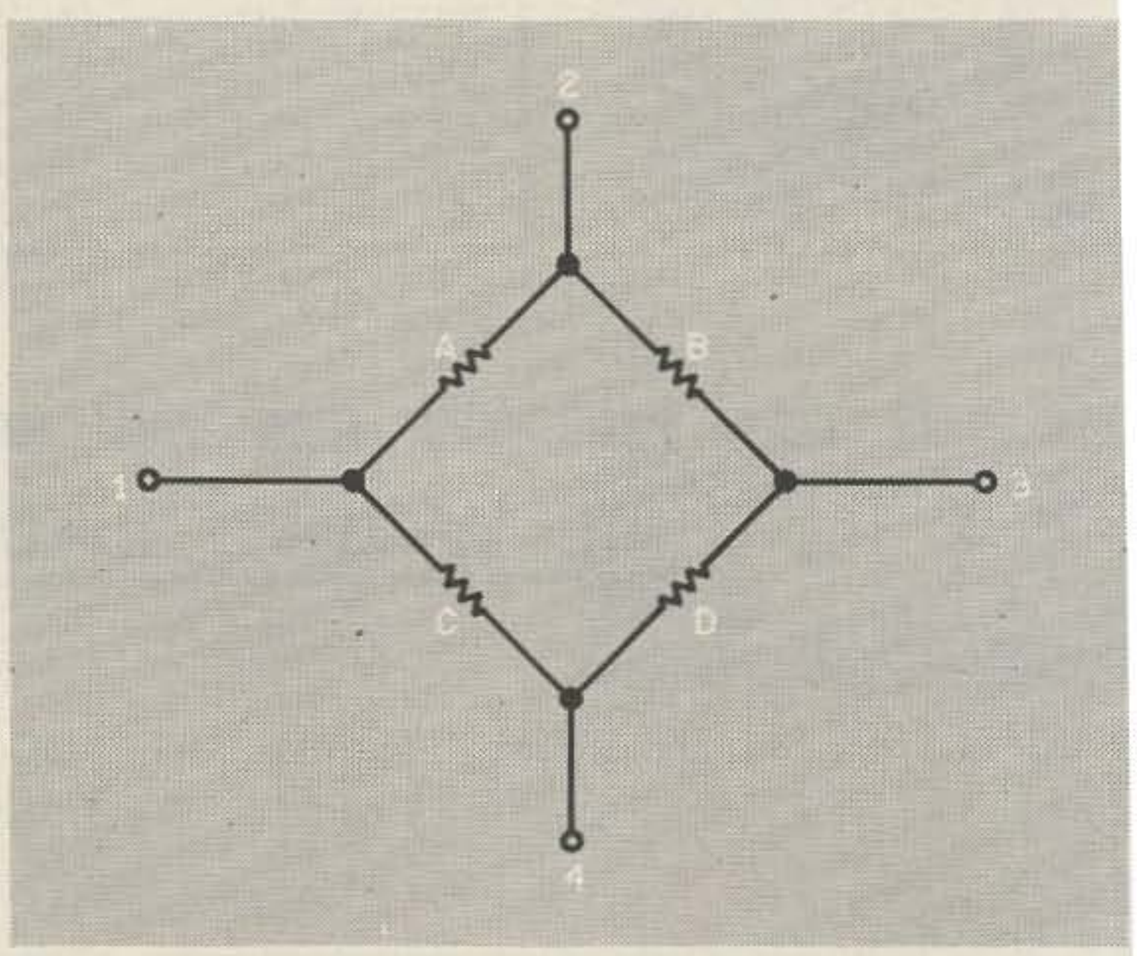

Fig. 2. Input-bridge circuit, simplified schematic diagram. If all resistance are equal, the bridge is balanced.

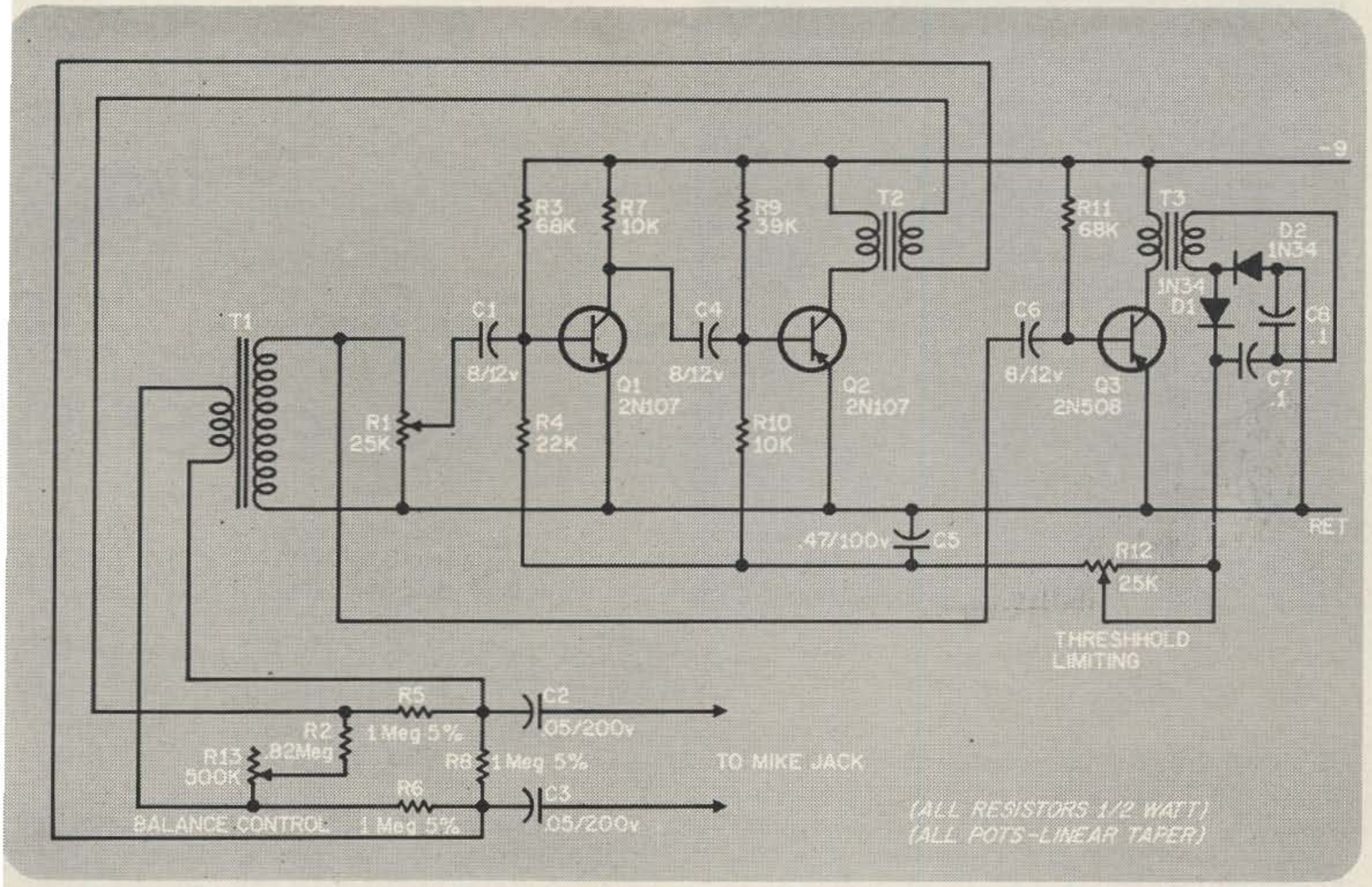

PARTS LIST

Transformers:

T1— Transistor input transformer, primary impedance .2 meg, secondary impedance 1 K (Stancor TA-47 with primary and secondary connections reversed, or equivalent)

T2— Transistor interstage transformer, primary impedance 10 K, secondary impedance .16 meg (Stancor TA-32 or equivalent)

T3— Transistor interstage transformer, primary impedance 10 K, secondary impedance 200 ohms (Stancor TA-34 or equivalent)

The input-bridge circuit is the feature borrowed from the airfield intercom design. Fig. 2 will probably look familiar to you as a Wheatstone bridge. The bridge, when balanced, produces infinite isolation between terminals 1 and 3 and terminals 2 and 4, and vice versa. However, if a signal is coupled across arm A only, it will show up at both sets of terminals. Conversely, a signal fed in at either pair of terminals will show up in arm A.

Therefore, arm A can be connected across an audio line, and any signal appearing on the line will show up at all four terminals of the bridge. Let's hook 1 and 3 up to the input of an amplifier, and 2 and 4 to the output[2]. Now, any signal coming in on the line will go to the amplifier input. After it has been amplified, it will come back in to the opposite and isolated bridge terminals, and be returned to the line from whence it came. Still, input and output of the amplifier are isolated and oscillation will not develop.

Theoretically, there's no limit to the amplification you can obtain with one of these. In practice, about 40 db. is the limit, since that's approaching the limit of isolation in a practical bridge circuit. If the line is non-reactive, and if you provide a fine balance adjustment (R13 in Fig. 3) and take care in construction to minimize stray coupling, a few more decibels may be squeezed out.

The only thing to watch out for in construction of the Booster is stray coupling around the bridge. This may limit your usable gain and consequently the compression ratio of the gadget. Otherwise, construction is according to usual transistor practices. An LMB No. 143 box chassis provides plenty of room for components. Locking-type potentiometers are recommended, but they're expensive. H. H. Smith lock nuts for standard volume controls work just as well.

To put the booster in operation, first hook it across the input of an amplifier connected to a speaker. R1, the floor level control, should be at minimum setting and the AGC line should be temporarily grounded to remove all control voltage from the boosting amplifier (connect a jumper from the base end of R12 to the return line).

Slowly advance R1 toward maximum. At some point, unless you're lucky and have per-

(Continued on page 46)

[2]Notice that both input and output of the amplifier must be isolated from ground. This means that transformer coupling is a must when using this circuit.

(AUDIO BOOSTER from page 9)

fect balance to begin with, oscillation will develop. Adjust R13, the balance control, until the howls stop. Advance R1 some more, readjusting R13 as necessary, until it becomes impossible to stop oscillations by adjusting R13. This will mark the usable limit of the Booster's gain.

Adjust your transmitter for 100 percent modulation on peaks, using your favorite method of monitoring modulation depth. Then remove the short from the Booster's AGC line and connect it to the microphone input using a Y-type connector. Set the limiting threshold control, R12, at maximum resistance.

Say a few words and check modulation depth. Advance R12 toward minimum resistance until your voice begins to sound like a monotone without inflection[3]. Lock R12 at that position and advance R1 toward minimum resistance until the sound of your voice is satisfactory again. All operating adjustments after initial calibration are made with R1, which can be marked in db. of limiting if desired. At minimum resistance of R1 the Booster is effectively out of the circuit, while at the maximum usable setting compression ratio will be in the neighborhood of 25 db (depending upon your mike).

If you're using a scope to check your modulation, you should at this point be able to see the difference between the modulation percentage with and without the Booster. So far as your effective talk-power is concerned, that gets boosted right along with the modulation index.

The Booster is not limited to AM use, either. It will work with any type of voice modulation, since its only effect on the waveform is to compress the dynamic range. No distortion is generated in the Booster; consequently, no filters or splatter chokes are necessary. 7 3

[3]At this point, your voice will have long since ceased to sound natural. Our objective in this adjustment is to set the limiting threshold so that the booster completely washes out all amplitude variation in the signal (see note 1). Operating adjustment to regain naturalness in the voice is made with R1.

(POWER SUPPLY from page 27)

A circuit breaker device is used for power supply protection when the supply is used on the 120 volt ac line. If a short should exist in your equipment, loading the supply too heavily, it will cut out, removing the ac supply voltage. To reset it, simply press the bottom on top of the cut-out. On dc operation a fuse is used instead. The circuit layout is not at all critical, though the wires from UHF jacks to the relay should be kept short.

Notice that all outputs from the supply, (filament and B+ voltage, as well as relay), are brought out of the supply through the use of a 6 terminal Jones socket. Terminal #6 is used to control the B+ - Antenna change over relay. If you desire to operate the change over relay from a location other then the chassis of the supply it is only necessary to connect a lead from #6 through a switch to ground. When terminal #6 is grounded, the relay is energized, operating the changeover.

The change-over relay, which is a 6 volt dc type, operates on any of the three input voltages. This is accomplished with a miniature power supply to furnish the proper voltage. Looking at the diagram you will see that a small rectifier, X1, is connected to the 6 volt winding of the power transformer, T1. On 120 volt ac operation, the 6 volts ac is rectified by X1 and filtered into good dc by R2 and C4 for the relay. On 6 and 12 volt dc operation, even though no filament voltages are furnished by the power transformer, X1 and its filter circuit is still receiving 6 volts ac, permitting operation of the relay on all three input voltages.

The power supply shown has been used in both 6 volt and 12 volt cars and in a 12 volt airplane! It has been used extensively on 120 volts ac as well. Neither the vibration of mobile operation, nor the constant changing from one input supply voltage to another has caused any trouble with the unit. 7 3

(CONVERTERS from page 15)

the mixer coil L3, and then the antenna series capacitor C1 and the cathode coil L1.

After you have aligned the unit you will be amazed by the performance of this inexpensive converter. As simple as it is, it has out-performed many fancy brothers using expensive tubes and many more components.

The noise generator, using a 5722 Sylvania diode, used for evaluation was built and carefully calibrated by the author, using the circuit and method of calibration from the VHF handbook by William I. Orr and H. G. Johnson. The sensitivity tests were made with a Measurements Corporation signal generator Model 80.

Tests performed and evaluated on many typical converters in the frequency range of 220, 144, 108, and 50 mc the averages are as follows:

FREQUENCY	NOISE FIGURE	SENSITIVITY
220 mc	5½ db	.2 μv
144 mc	4½ db	.1 μv
108 mc	4 db	.1 μv
50 mc	3½ db	.1 μv

In conclusion the author wishes to extend his thanks to Joe Kwetnewski W9UTD for his excellent photography. 7 3

COIL DATA is on page 47 ——▶

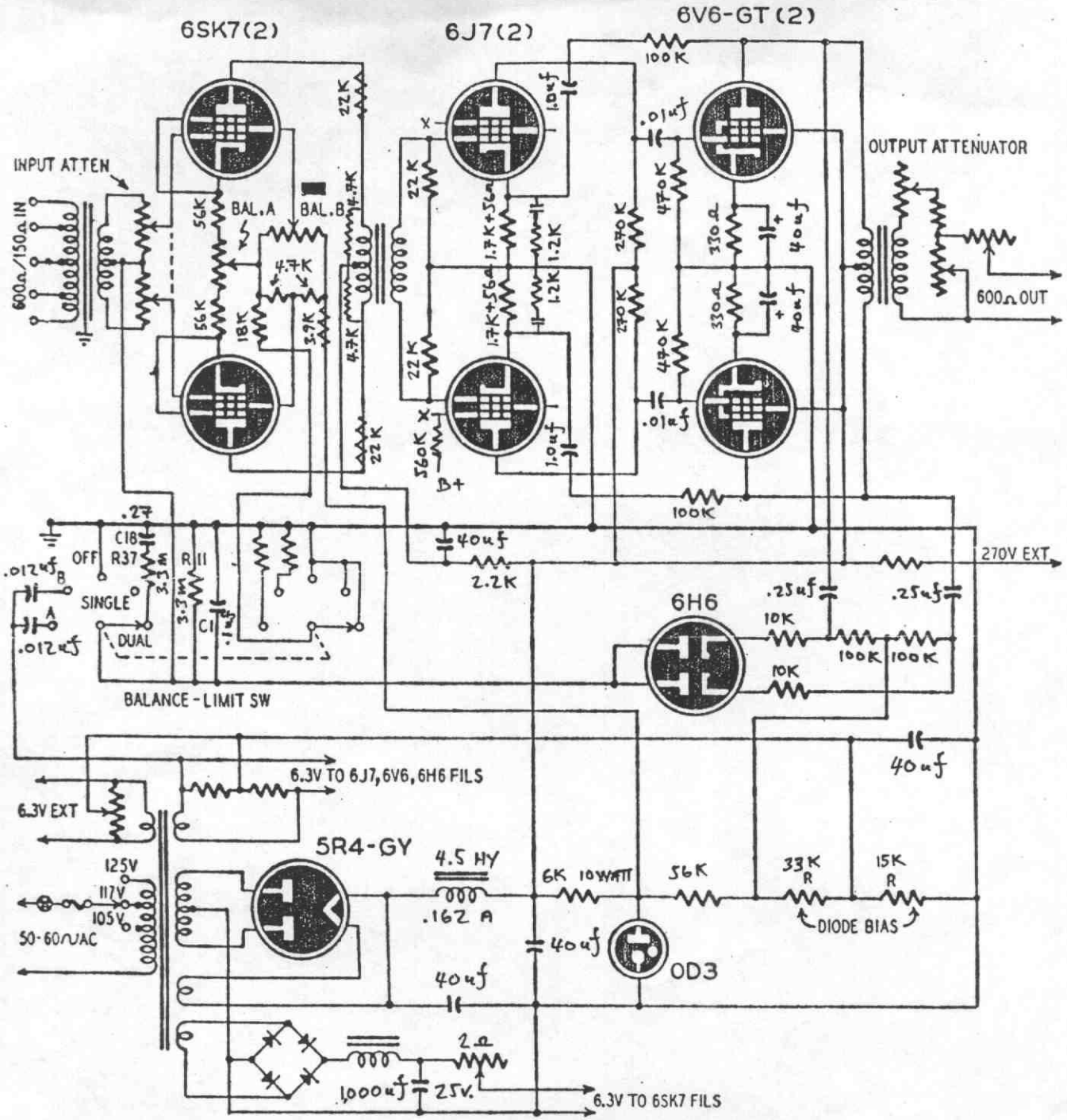

Fig. 1—Circuit of the BA-6A limiting amplifier which has maximum gain of 54 db.

Audio Bandwidth Control

The articles in this section cover methods of equalization of the audio specrum. It is desirable to have the high frequencies cut off at some point because they contribute almost nothing to the quality of the sound at the receiving end. The individual may determine what spectrum is best. In most cases, limiting it to 200-4000 cycles works well. Others may prefer 300-3000 cycles. There is no fixed requirement for lows or highs except to use only what you need.

The low frequencies of an unprocessed voice take much more modulating power than those above 300-400Hz. This is a natural characteristic of the human voice, than we put out more growls than squeaks. The ham with the very deep bass voice may have to attenuate his floor-shaking tones in order that his higher frequency spectrum from 300-3500 cycles, which carries the intelligence yet has a lower energy level, maybe concetrated and sent through the transmitter. Aditionally, the modulation transformer (and and to a lesser extent, some of the others) may not be able to pass frequencies below 200-300Hz with enough power to fully modulate the transmitter. The core of a small or cheap modulation transformer may saturate at low frequencies resulting in distortion and excessive modulator current and inefficiency.

At the high end, any less than 2500 cycles of high frequency bandwidth will often start to sound poor or "muffled" at the other end. Of course this sort of dull sound is more noticeable when the reception is good, but during bad conditions it can really be a problem in even understanding the transmitting station. The effect of a restricted high frequency response has a greater 'muffling' effect on the female voice. The ladies benefit from a slightly higher frequency cut-off.

Short wave receivers usually pass a spectrum from the bass of 100-250 cycles, up to the treble range of 2, 4, 6, or 8 KC depending on selectivity setting. 6-8KC is usually used only for listening to AM.

Therefore, the original premise of controlling the bandwidth has some merit for the average Joe Transmitter. If we presume to use frequencies from 50 to 5000 cycles, then we better make sure the modulator power stage can pass this bandwidth at full power or no worse than -3dB without distortion.

Many ways exist to limit the bandwidth fed to the modulator. One high frequency limiting practice to be avoided is placing excessively large capacitances across the transformer primary and secondary. This practice forces the modulator to amplify the high frequencies only to absorb them. A small capacitance is acceptable for RF abatement, generally no more than 0.001uF.

An excellent way to set the overall frequency limitation is a surplus bandpass filter salvaged from old equipment. They are not too common today but can be found with typical bandpass of 300-3000, 300-3500, 250-4000, and other useful characteristice. Pay attendtion to the input and output impedances or the frequency response will be corrupted. LTSpice is a convenient way to design and simulate your own filters using standard inductances and stacking several capacitors to arrive at each C value.

Once the overall bandwidth is decided upon, an equalizer or bass and treble control can be used before the filter to shape the spectrum and emphasize or attenuate various portions of it. Many hams find it useful to give the spectrum an upwards slope toward the high end, for example, the NRSC curve. This results in a clear sound retaining much of the speaker's individuality without exceeding the overall bandwidth necessary to communicate. The possible adjustments are infinite, allowing one to go for total and forceful telephone-like intelligibility or a natural and clear vocal tone.

For tube lovers, there are a couple of vacuum-tube parametric equalizers that allow the dB slope and corner (turnover) frequencies to be set for highs and lows.

The following graphs are from a recent article on NU9N.com. There was, at the time of this compilation, an entire paper on that site devoted to doing AM properly and it should be read.

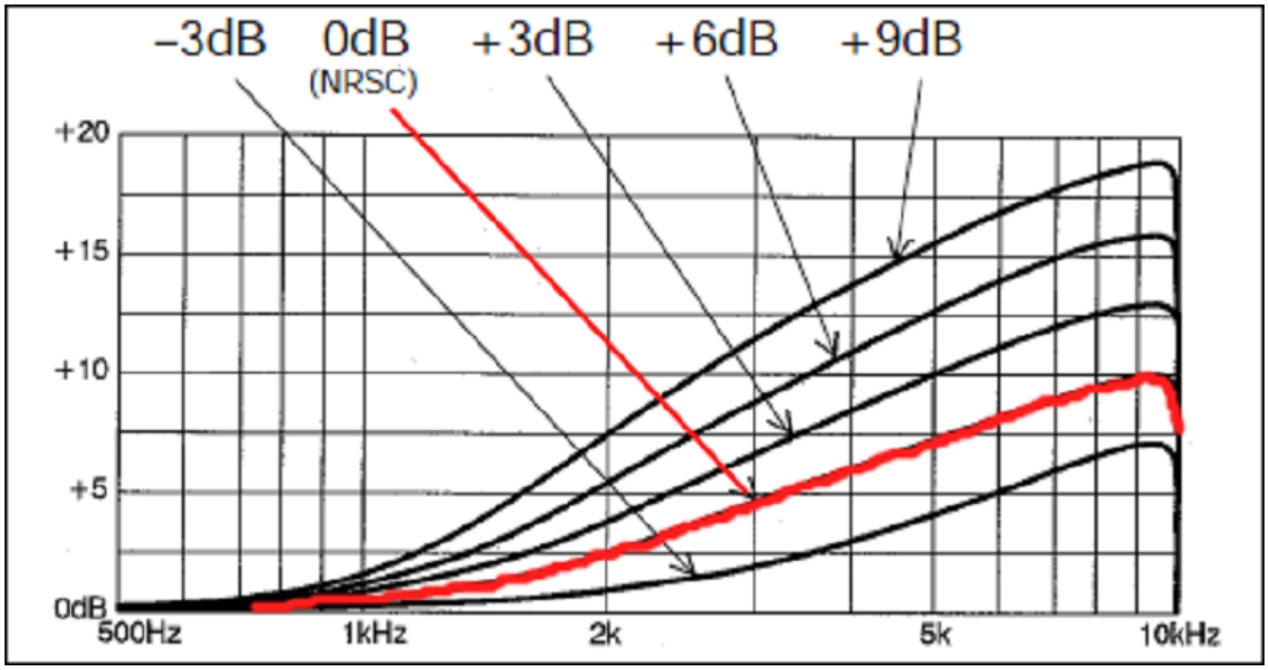

Pre-emphasis curves

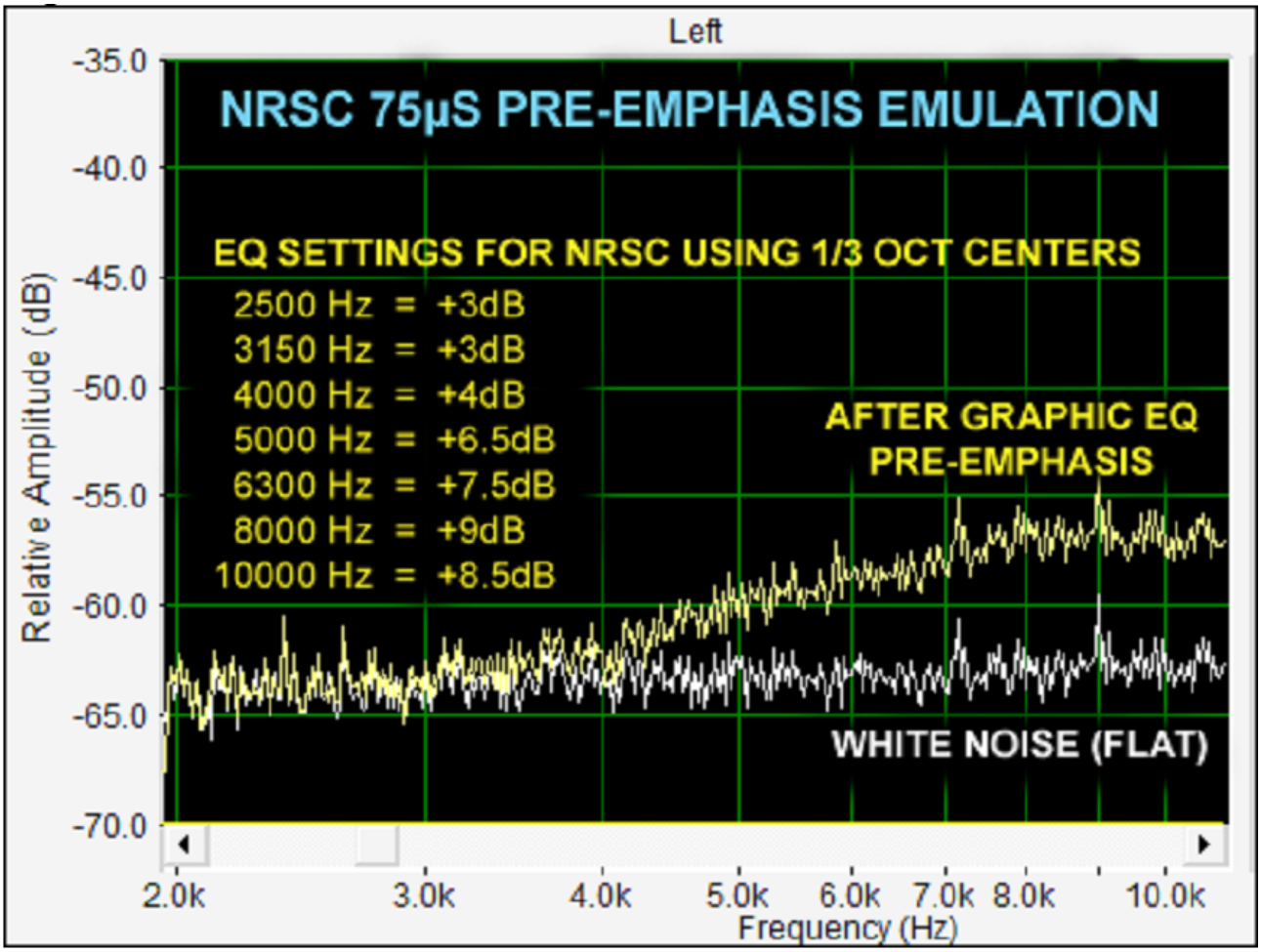

Graph showing EQ settings for NRSC-like curve. White noise is a good way to test a modulator. Provided you have a good demodulator. Regardless of chosen HF cut off frequency, the extra boost adds intelligibility. There is some wisdom in boosting the treble slope more, when the HF cut off is lower. That is, cutoff @ 3KC & 9dB boost; cut off @ 5KC & 7.5dB boost. It can be overdone and is all experimental.

Some experimenters may want to use passive filters instead of active filters. As stated, ready-made ones can be salvaged from equipment or they can be made at home. Programs like LTSpice, and many LC filter examples on the internet provide many examples. There is also a free program called Filtercad that is very useful. Usually the sharpest-slope of these would be LC type band pass, high pass, or low pass filters. These can be put in series or parallel, as needed to give a desired response and they can be switched in and out for operating under different conditions. Bandwidth control is the counterpart to equalization.

One thing beginners overlook is the neccessity of matching the impedance into and out of a filter. If the input impedance is too far off, the input and output elements of the filter circuit will have too much or too little of an effect on the response, the result being that the response is not smooth where it should be, and distorted in the cutoff area, resulting in a peaky audio response, which is what should be avoided.

The impedance rating of the filter is for the external impedance. The internal impedance of the filter may be nothing like that. If two filters, each rated 500 Ohms input and output, are simply put in series, there is usually a very poor match between them at several points in the frequency response curve and this can result in peaks or troughs of many dB.

The following pages show a typical low pass filter found on the internet, designed by a Mr. Bonadio. The idea of it is to pass all frequencies up to about 3300Hz, then severely cut off everything above. In the original application, it was apparently placed between the speech amp and the modulator grids, and so had larger-size components to handle the power losses inherent in such filters whcih can be 3 to 10dB or more. In this commentary, it is considered to place it in a low level circuit so that power loss considerations do not cloud the discussion of impedance matching.

Figure 1 shows some filter circuits designed for 500 Ohm input and output.

From top to bottom are the original circuit, two in series with a T-pad, two in series with a pi-pad, two in series with a 500 Ohm termination between them, and two in series with a 500 Ohm resistance as a series link.

Figures 2 and 3 (magnified) show the results of the exercise.

On the left is the dB scale, which is the response curve. On the right is the phase shift scale, which is not as important. The trace "V(out_bonadio)" is the response of the original design. It has ultimately an attenuation of 0dB@3.3KHz, 3dB@3.5KHz, and 46dB@4KHz, so the slope is about 43dB in 500Hz. The traces "V(out1)", "V(out2)", "V(out3)", and "V(out4)" show the result of putting two filters in series with the inter-filter matching schemes mentioned.

The graphs speak for themselves, although for those with less understanding it is to say, that the scheme of V(out4) does not match the filters and is to be avoided. This result, by the way, is about the same as if no 500 Ohm resistor at all had been used and a simple wire had connected the two filters.

The scheme used for V(out3) saves ten cents worth of resistors over the better responses of V(out2) and V(out3), but there is +/-1dB more ripple in the response before the cut off frequency. It should be worth ten cents to avoid inaccuracies where possible.

This said, the component values given are not 'stock values' but precise. It serves for an illustration but adds difficulty in construction. Therefore, some deviation is expected but concurrently should be kept to a minimum because it adds up.

Simulation using measured values of on-hand components is well worth the effort. Capacitors and inductors can be put in series or parallel to get closer to whatever values one may seek, and it should be kept in mind that not all salvaged or ready-made filters are so precise despite their cost.

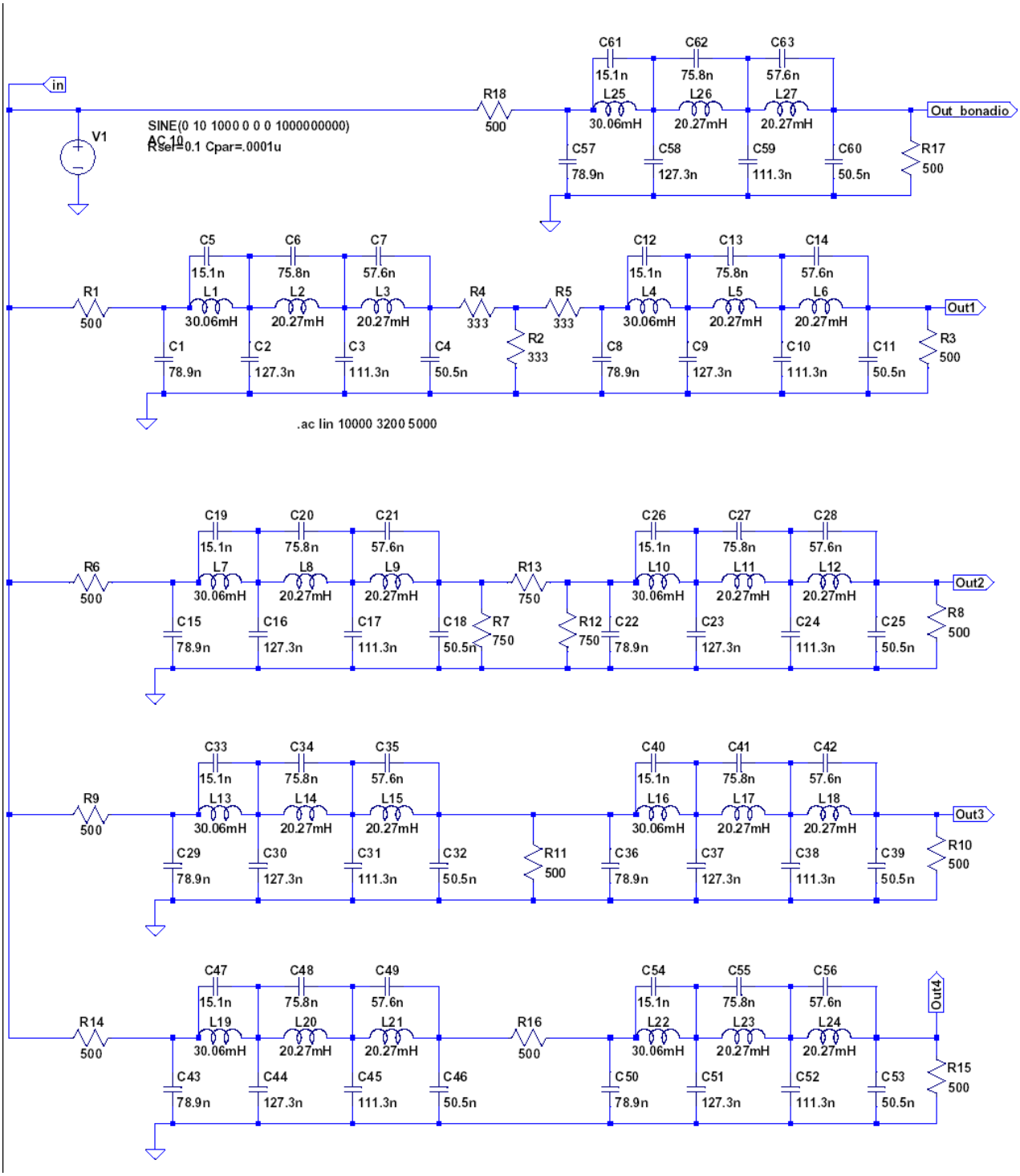
in
V1
SINE(0 10 1000 0 0 0 1000000000)
AC 10
Rsel=0.1 Cpar=.0001u
R18
500
C61
15.1n
C62
75.8n
C63
57.6n
L25
30.06mH
L26
20.27mH
L27
20.27mH
Out_bonadio
C57
78.9n
C58
127.3n
C59
111.3n
C60
50.5n
R17
500
R1
500
C5
15.1n
C6
75.8n
C7
57.6n
L1
30.06mH
L2
20.27mH
L3
20.27mH
R4
333
R5
333
C12
15.1n
C13
75.8n
C14
57.6n
L4
30.06mH
L5
20.27mH
L6
20.27mH
Out1
C1
78.9n
C2
127.3n
C3
111.3n
C4
50.5n
R2
333
C8
78.9n
C9
127.3n
C10
111.3n
C11
50.5n
R3
500
.ac lin 10000 3200 5000
R6
500
C19
15.1n
C20
75.8n
C21
57.6n
L7
30.06mH
L8
20.27mH
L9
20.27mH
R13
750
C26
15.1n
C27
75.8n
C28
57.6n
L10
30.06mH
L11
20.27mH
L12
20.27mH
Out2
C15
78.9n
C16
127.3n
C17
111.3n
C18
50.5n
R7
750
R12
750
C22
78.9n
C23
127.3n
C24
111.3n
C25
50.5n
R8
500
R9
500
C33
15.1n
C34
75.8n
C35
57.6n
L13
30.06mH
L14
20.27mH
L15
20.27mH
C40
15.1n
C41
75.8n
C42
57.6n
L16
30.06mH
L17
20.27mH
L18
20.27mH
Out3
C29
78.9n
C30
127.3n
C31
111.3n
C32
50.5n
R11
500
C36
78.9n
C37
127.3n
C38
111.3n
C39
50.5n
R10
500
R14
500
C47
15.1n
C48
75.8n
C49
57.6n
L19
30.06mH
L20
20.27mH
L21
20.27mH
R16
500
C54
15.1n
C55
75.8n
C56
57.6n
L22
30.06mH
L23
20.27mH
L24
20.27mH
Out4
C43
78.9n
C44
127.3n
C45
111.3n
C46
50.5n
C50
78.9n
C51
127.3n
C52
111.3n
C53
50.5n
R15
500

Figure 1

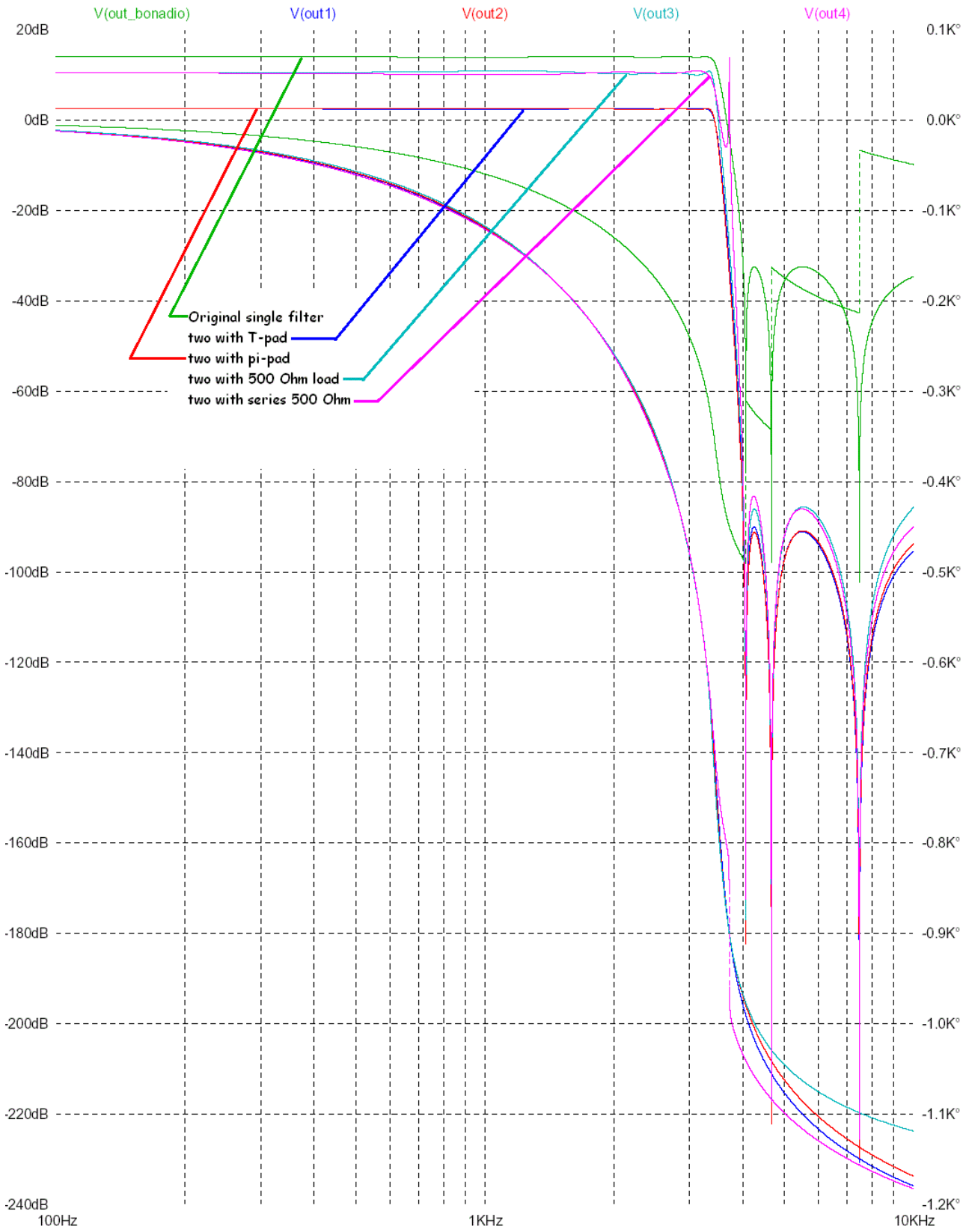
V(out_bonadio)
V(out1)
V(out2)
V(out3)
V(out4)
20dB
0dB
-20dB
-40dB
-60dB
-80dB
-100dB
-120dB
-140dB
-160dB
-180dB
-200dB
-220dB
-240dB
0.1K°
0.0K°
-0.1K°
-0.2K°
-0.3K°
-0.4K°
-0.5K°
-0.6K°
-0.7K°
-0.8K°
-0.9K°
-1.0K°
-1.1K°
-1.2K°
100Hz
1KHz
10KHz
Original single filter
two with T-pad
two with pi-pad
two with 500 Ohm load
two with series 500 Ohm

Figure 2


V(out_bonadio)
V(out4)
V(out3)
V(out2)
V(out1)
30dB
28dB
26dB
24dB
22dB
20dB
18dB
16dB
14dB
12dB
10dB
8dB
6dB
4dB
2dB
0dB
-2dB
-4dB
-6dB
-8dB
-10dB
-12dB
-14dB
-16dB
-18dB
-20dB
-22dB
-24dB
-26dB
-28dB
-30dB
-32dB
-34dB
-36dB
-38dB
-40dB
-42dB
-44dB
-46dB
-48dB
-50dB
-52dB
-54dB
-56dB
-58dB
-60dB
-62dB
-64dB
-66dB
-68dB
-70dB
-72dB
-74dB
-76dB
-78dB
-80dB
-82dB
-84dB
-86dB
-88dB
-90dB
-92dB
-94dB
-96dB
-98dB
-100dB
-102dB
-104dB
-106dB
-108dB
-110dB
-112dB
-114dB
-116dB
-118dB
-120dB
240°
180°
120°
60°
0°
-60°
-120°
-180°
-240°
-300°
-360°
-420°
3.2KHz
3.4KHz
3.6KHz
3.8KHz
4.0KHz
4.2KHz
4.4KHz
4.6KHz
4.8KHz
5.0KHz

Figure 3

Some Notes on Fidelity

Simple Design Suggestions for A.F. Amplifiers

BY HERBERT BROOKS,* W9SDG

Here are a few design considerations that may help you in getting the best frequency response out of any simple audio amplifier.

THE designer of an audio-frequency amplifier approaches his problem with three requisites in mind — sufficient gain, minimum wave distortion, and correct frequency response.

Getting sufficient gain is probably the least of his worries, although when he has his gain he may find plenty of "bugs." Generally, it is a simple matter to estimate the number of stages required.[1]

Minimizing wave distortion is not quite so simple. The usual procedure here is to follow the tube manufacturer's recommendations as to electrode voltages, load resistances, and signal levels. The signal level is usually so low compared to the electrode voltage, however, that the plate load may vary widely without introducing distortion in voltage amplifiers. Even-harmonic distortion may be eliminated by using balanced (push-pull) stages.

Push-pull circuits offer so many advantages that it often pays to use all push-pull stages in an amplifier.[2] A comparison of typical circuits A and B in Fig. 1 will show that the push-pull stage does not require twice the number of parts required by a single-ended stage. A further saving in push-pull may be made in power-supply filter and in decoupling circuits, since push-pull stages are less sensitive to disturbances in plate supply voltage than are single-ended stages. Also, the coupling transformer in the plate circuit of a balanced push-pull stage does not suffer from d.c. saturation. This permits the use of a smaller transformer, with consequent increased high-frequency response, or greater low-frequency efficiency with a given transformer.

The benefits of all-push-pull operation can be enjoyed with single-ended input by using a single-ended input tube with its output in push-pull with a phase-inversion tube (Fig. 2). The ratio of resistance $R_1 + R_2$ to resistance R_2 equals the actual amplification factor of the inversion tube. This ratio should be adjusted to produce equal excitation to the power tubes, or until no signal voltage appears across the cathode bias resistor, R_{K2}, of the balanced Class-A stage.

In any resistance-capacity coupled amplifier there is a plate load resistance, a coupling condenser, and a grid leak. The correct value of load resistance is taken from a tube data chart. The coupling condenser allows the a.c. to pass but blocks the plate voltage of the driving tube from the grid. The grid leak feeds the grid bias, since it is connected to a source of potential negative with respect to the cathode and no current is allowed to be drawn through it, and it also acts as part of the plate load. An increase either in the capacity of the condenser or the resistance of the leak will extend the response range of the stage in the low-frequency region. An RC product of 0.01, where R is the grid leak resistance in megohms, and C is the coupling condenser capacity in μfd., will give a substantially flat response curve down to 30 cycles.[3] Such a product could be obtained, for example, with a 0.01-μfd. condenser and a

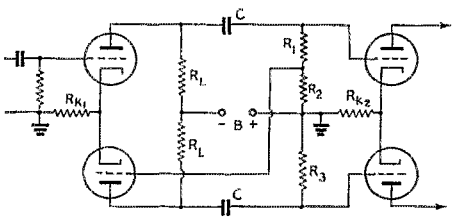

Fig. 2 — A phase-inversion circuit for use with single-ended input and push-pull output.

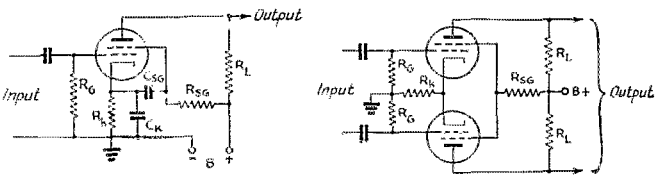

Fig. 1 — Typical voltage amplifier circuits. A single-ended circuit is shown at A, and a push-pull one at B, R_G is the grid resistor, R_L the load resistor, R_K the cathode resistor, R_{SG} the screen dropping resistor.

* Box 1022, Palos Verdes Ests., Calif.

[1] *Radio Amateur's Handbook*, Modulation chapter.

[2] *Radio Amateur's Handbook*, 1940, p. 206, "All P.P Speech Amplification."

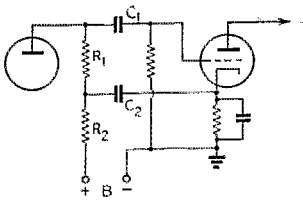

Fig. 3 — **A coupling circuit for preventing cathode degeneration. The products R_1C_1 and R_2C_2 should be 0.01 or more, where values of resistance are in megohms and values of capacity in μfd.**

1-megohm leak, or with a 0.002-μfd. condenser and a 5-megohm leak. The author prefers the latter combination because mica condensers are superior to paper condensers as to low leakage, long life, and resistance to damage by heating; and 0.01-μfd. micas are a little hard on the pocketbook. Another reason for using a high-resistance leak is that bass response can be attenuated simply by switching in a lower-resistance leak, say 1 megohm, without fear of too low a grid leak resistance affecting the loading of the driving stage.

Frequencies above 5000 cycles are not so easily controlled on paper. However, the input impedance of conventional tubes is in the megohms over the whole audio range, so it should be possible to build a satisfactory wide-band amplifier without inverse feedback or other compensation. Stray, uncontrolled feedback is our worst enemy, but a logical layout of parts with short leads and with the power and low-level stages well separated should minimize valleys and peaks in the response curve below 5000 cycles. One other thing to remember when considering the high frequencies is that electrolytic condensers are not very efficient at 5 kc., and should be shunted by small paper condensers.[4]

The zero-audio-potential elements of tubes used in single-ended circuits must be by-passed to "ground." Perhaps the most common destroyer of both low- and high-frequency response is the cathode by-pass condenser. For good response down to 30 cycles, this should be at least 5 μfd. for by-passing 2000 or 3000 ohms and at least 25 μfd. for by-passing 400 ohms or so.[5] As mentioned above, these should be by-passed for high frequencies by 0.1-μfd. or so paper condensers. The circuit of Fig. 3 separates the plate- and grid-return circuits and eliminates the cathode by-pass condenser, at the expense of a slight reduction in voltage gain. Sometimes it is more practical to forget cathode-drop biasing and use batteries or their equivalent. A satisfactory screen by-pass capacity is 0.1 μfd.

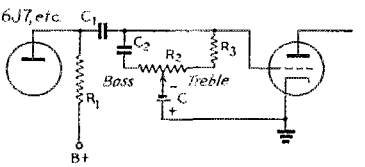

Fig. 4 — **A tone control circuit for full bass or treble attenuation with one control.**
C_1 — 0.002 μfd.
C_2 — 250 μμfd. **R_2 — 5-megohm potentiometer.**
R_1 — 0.25 megohm. **R_3 — 1 megohm.**

The author knows hams who never use "tone controls" because they want true, unimpaired frequency response. Nevertheless, it is an advantage to be able to eliminate the high frequencies or the low frequencies for more efficient and understandable modulation. A bass attenuator has already been mentioned, and

(Continued on page 28)

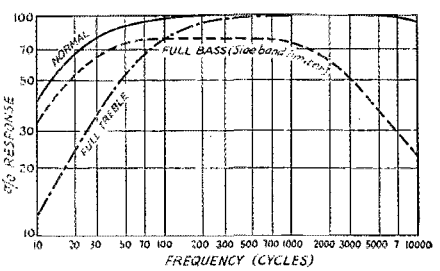

Fig. 5 — **The theoretical frequency response of the tone control of Fig. 4 for various settings of the tone control. The solid line (normal response) corresponds to a midway setting of R_2.**

[3] The coupling condenser and grid resistor are effectively in series across the load resistance. The coupling coefficient equals the signal voltage developed across the grid resistor divided by the signal voltage across the resistor and condenser in series, or

$$K = \frac{R}{\sqrt{R^2 + X^2}}$$

(assuming $Z = X$). By manipulation and substitution of $\frac{1}{2\pi fC}$ for X, we obtain the useful form

$$RfC = \frac{K}{2\pi\sqrt{1 - K^2}}$$

Probably the easiest way to handle it is to assume a minimum satisfactory value for K. Choosing 0.9 for this value and substituting,

$$RfC = 0.326$$

or, for 33 cycles, $RC = 0.01$.

[4] "Facts You Should Know About Condensers," Sprague Products Co., 1939.

[5] Analysis will show that the degeneration caused by a cathode resistance common to grid and plate returns is

$$\frac{e_{cath}}{e_{input}} = \frac{\mu}{\frac{R_{load}}{R_{bias}} + \mu}$$

where μ is the actual amplification factor. It will be found that $\frac{R_{load}}{R_{bias}}$ will nearly equal μ, and thus that the gain of a Class-A amplifier which obtains all of its bias from an *un-by-passed* cathode resistor will be approximately half that of a perfectly by-passed stage. This degeneration does not alter the signal wave-form; and it is perfectly practical to design an amplifier without cathode by-pass condensers if the lower gain can be tolerated. Otherwise the cathode by-pass impedance must be a small fraction of the cathode resistor value over the entire desired frequency range if a flat frequency-response curve is to be obtained.

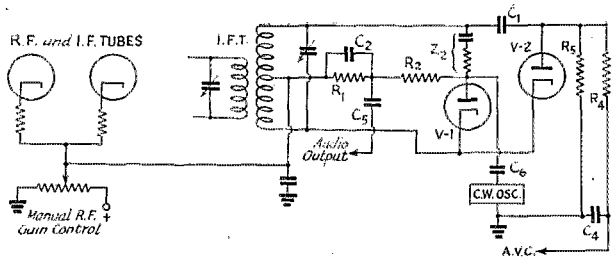

Fig. 4 — A modification of the circuit of Fig. 2 for receivers in which i.f. gain is controlled by varying the cathode potentials of r.f. and i.f. tubes. The values are the same as in Fig. 2.

in the cathodes of the r.f. and i.f. tubes, to vary the potential of the cathodes above ground. In such cases, the only modification necessary to obtain the same result is to return the cathode of the a.v.c. rectifier to this potentiometer instead of to ground. The resultant combined circuit is shown in Fig. 4.

Here are combined the advantages of manual and automatic volume control, for c.w. reception. There is also a decided improvement in the reception of non-continuous carrier radiophone, such as is encountered when voice-operated relays, or push-to-talk switches, are used on transmitters in certain types of commercial services. In such cases, the advantage lies in the fact that by adjusting the manual r.f. gain control near the optimum setting as previously explained, overall receiver sensitivity is restricted when the carrier is off, thereby limiting the noise level during carrier-off periods.

By combining the two modifications, either as shown in Fig. 2 or in Fig. 4, nothing is sacrificed in the receiver, and much is gained at little or no expense.

Results

For the original trial, these modifications were made in an RCA ACR-155 receiver, which is "made to order" for the arrangement of Fig. 2. The ACR-155 uses a 6H6 second detector-a.v.c. tube, the c.w. oscillator is thoroughly shielded and isolated, and the manual r.f. gain control is arranged to provide variable negative bias for the grids of the r.f. and i.f. tubes. Complete changeover was accomplished in three hours, and the only expense involved was replacement of the i.f. output transformer with one having a center-tapped secondary. The 100,000-ohm r.f. gain control was retained for P, but a 10,000-ohm unit would work as well. Incidentally, values of the balancing impedance Z_2 components were found to be non-critical, full satisfaction having been attained using an available 35,000-ohm resistor for R_3, and a 3–30 $\mu\mu$fd. trimmer condenser at minimum setting for C_3.

Operation of the receiver for c.w. can be handled in the same manner as for 'phone reception. With the r.f. gain control at maximum receiver sensitivity, and the c.w. oscillator on, it is a pleasure to tune across the c.w. bands and hear the weakest signals, with the assurance that the speaker won't jump out on the floor when strong signals are encountered, since the a.v.c. is always in use. When a particular signal is selected, the r.f. gain control may then be adjusted for smooth operation if necessary, and the a.v.c. will still take care of increases in signal strength due to unsteady transmission, or sudden blasts from strong interfering signals. When an interfering signal is considerably stronger than the desired signal, it will take control of the a.v.c. and cause variations in the strength of the desired signal as the interfering signal is keyed. This is remedied by adjusting the r.f. gain control until the interfering signal no longer operates the a.v.c. The desired signal then no longer controls the a.v.c., and is weakened accordingly, just as when full manual r.f. gain control is employed as in present receivers. There is an advantage in tuning 'phone stations, particularly on the ten-meter band where tuning may be critical, since the c.w. oscillator may be turned on to zero-beat a signal without reducing volume, and without causing frequency shift if stability of the converter tube is affected by changes in grid bias, since the c.w. oscillator has no effect on grid bias through the a.v.c. channel. This system may also facilitate break-in operation, since the a.v.c. will prevent overloading the receiver when the transmitter is operating at or near the receiving frequency.

All in all, the improvements attained by these changes are well worth the little effort and expense involved, for, after all, if a.v.c. is desirable for 'phone reception, why not equally so for c.w. reception? Furthermore, operation is simplified by the elimination of one more control, the a.v.c. switch, from the front of the receiver panel.

Some Notes on Fidelity

(*Continued from page 21*)

treble frequencies can be attenuated by a small condenser shunting the load resistance or the grid resistor. For example, a 250-$\mu\mu$fd. condenser shunting a 0.25-megohm load will begin its attenuation at about 2000 cycles. Fig. 4 shows a circuit in which a single control attenuates either bass or treble, depending upon the setting, and the curve in Fig. 5 shows the range of control using this system.

Two Stage Bass and Treble Parametric Equalizer with Feedback

The figure shows a complete equalizer for bass and treble with two variable resonances and variable Q's. A sharp eye will notice the omission of a resistor, probably 0.27M as in the previous stage, between the grid of the second stage and the wiper of the Treble Q potentiometer.

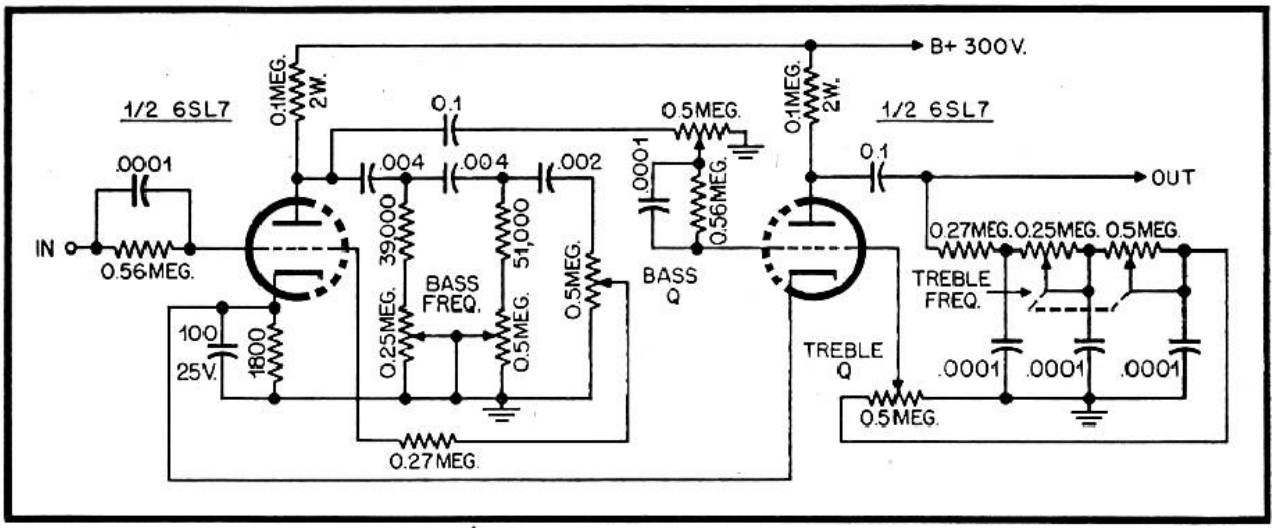

Variable Resonances? Old terms and new..

Turnover Frequency: The frequency at which a high pass or low pass filter begins to have an effect. The area 'knee' of the response curve, where the curve, as plotted on paper, begins to 'turn over', not necessarily indicative of a standard dB relationship.

Resonance: same meaning as modern. LC circuits may not be involved, but a series of RC filters arranged to select or reject a particular set of frequencies, sometimes in a gaussian distribution.

Q: same meaning as modern. LC circuits may not be involved, but a series of RC filters arranged to give a particular response curve height to width shape.

"equalizer for audio frequencies having two or more variable resonances, each of which also has variable Q": parametric equalizer

Feedback xxxx circuit: a circuit that achieves its effect on the signal via (usually) negative feedback around a vacuum tube stage. In contrast to a circuit that achieves its effect on the signal by its being in the interstage path of the signal.

A Feedback Tone Control Circuit

The author gives two examples of wide-range, switch-type tone controls using frequency-sensitive negative feedback, also calculations and methods of approach for designing variations on the basic circuit.

HAMILTON BARHYDT*

TONE CONTROL CIRCUITS have long been a weak point in the design of audio preamplifier and control circuits because of the distortion they introduce. Now that power amplifiers are being built with 20 db or more feedback, reducing intermodulation distortion to less than 1 per cent at normal volume levels, it is quite possible for the major part of the distortion in the amplifier system to come from the earlier stages. The results of intermodulation distortion measurements on voltage amplifiers[1] indicate that all voltage amplifiers with outputs above 0.5 volt need inverse feedback to keep intermodulation distortion well below 1 per cent.

The usual tone control involves a variable attenuator with a loss of about 20 db, or 10 times, for flat frequency response, in order to be able to give up to 20 db of boost. The audio signal is amplified to a large value and then reduced about 10 times in the tone control. To accomplish this without introducing excessive amounts of distortion, the designer must use a feedback driver involving additional tubes or operate the entire circuit at a low signal level, increasing the relative hum and noise level.

A much neater solution is to use a feedback amplifier with varying amounts of feedback to give the tone-control effect. The extra gain, rather than being thrown away in an attenuator, is used to provide distortion-reducing feedback. Degenerative tone controls have been used in this country for many years, but have never gained great popularity since the circuits require an inductance for the bass tone control. Recently Baxandall in England introduced another type of feedback tone control using no inductances.[2] Barber has described this circuit in AUDIO ENGINEERING.[3]

The feedback tone control circuit as published by Baxandall and Barber, although a great improvement over previous circuits, still has several disadvantages. First the preceding circuit must have a very low output impedance in order to obtain maximum bass and treble boost from the tone-control circuit. This required Barber to use an extra tube, a cathode follower, to drive his version of the tone control. The maximum treble boost available at 15,000 cps with this circuit is reduced more than 1 db if the output impedance of the preceding circuit exceeds 6500 ohms, more than 4 db if this impedance exceeds 20,000 ohms.

Second, there is as much as 2 db of overshoot in the bass tone-control curves. Baxandall shows this effect in his article. For the benefit of those who do not have easy access to *Wireless World* this effect is illustrated in *Fig.* 1, showing some experimental bass tone-control curves made with a circuit like that described in Barber's article. The overshoot is caused by the presence of two capacitors in the bass tone-control network. Eliminating one of the capacitors eliminates the overshoot.

The author's third objection is to the form of the tone-control frequency curves. This is an admittedly controversial point, since any given set of tone-control curves is a compromise. In fact, Baxandall and Barber stated that one of the advantages of their tone control was the shape of the curves. A recent article by Villchur discusses this problem very ably.[4] The author agrees with Barber that the primary purpose of the tone control is to adjust the over-all tonal balance of the complete audio reproduction system. However, he differs in belief on how this might best be accomplished. For the purpose of considering over-all tonal balance the author likes to split the audio spectrum into three parts: the middle range from 200 cps to 4000 cps, the bass region from 200 cps on down, and the treble region from 4000 cps up. A tone control is used to vary the amplification of the bass and treble regions in respect to the middle range. This is best done by a tone control with fixed crossover frequencies near 200 cps and 4000 cps. (By crossover frequency the author does not mean the technical turnover frequency, but rather a less

* *114 Summit Avenue, Ithaca, N. Y.*

[1] W. B. Bernard, "Distortion in voltage amplifiers," AUDIO ENGINEERING, Feb. 1953, p. 28.

[2] P. J. Baxandall, "Negative feedback tone control," *Wireless World*, Oct. 1952, p. 402.

[3] B. T. Barber, "Flexible tone control circuit," AUDIO ENGINEERING, Sept. 1953, p. 29.

[4] E. M. Villchur, "The selection of tone control parameters," AUDIO ENGINEERING, March 1953, p. 22.

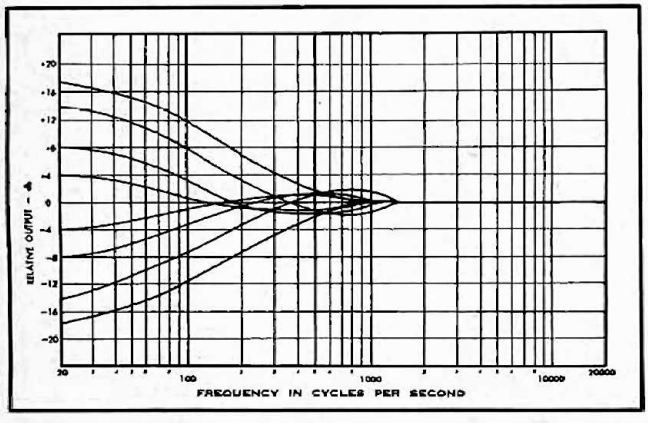

Fig. 1. These curves, taken from a Baxandall tone control, show the overshoot obtained with continuous controls.

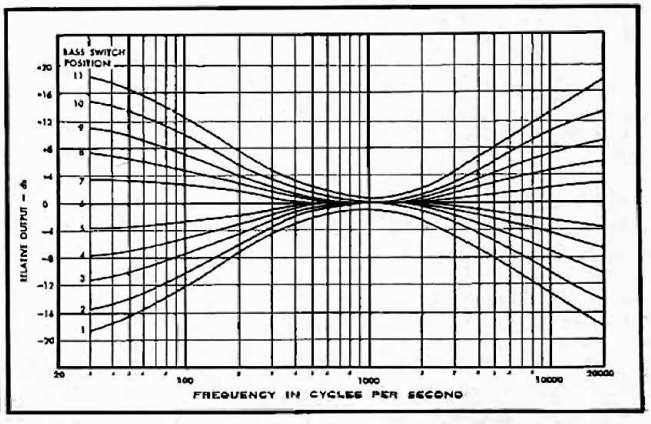

Fig. 2. Curves illustrate the wide range of slope control obtainable with the circuit of Fig. 2. The turnover frequencies are fixed.

well defined frequency where the relative effect of the tone control curve becomes large.) In the circuit shown by Baxandall and Barber, on the other hand, the shape of the response curve is held more or less constant and the crossover frequency is varied.

Use Of Switches

A tone control free of overshoot and interaction between the treble and bass controls can be built conveniently only with switches rather than potentiometers. The simple form of the expression giving the frequency response of the feedback-type tone control allows almost any desired set of tone control curves to be built up easily if switches are used. Furthermore, the switch type of tone control is convenient since it can be quickly reset to the same positions. The user will quickly associate certain positions of the tone-control switches with the various conditions of audio reproduction that he normally encounters with his equipment and consequently will find the switches a great aid. The author finds that an average of two or three db variation between the switch positions is just about right to give slight but noticeable changes of tone quality. A switch-type feedback tone-control circuit is shown in *Fig.* 3 and its frequency response curves in *Fig.* 2. Maximum boost is obtained in position 11 of both treble and bass switches, while maximum attenuation is obtained in position 1. Position 6 gives flat frequency response and the gain of the circuit is unity. *Figure* 4 is an equalizer with variable turnovers and continuous slope controls.

In order to understand better the operation of the feedback tone-control circuit it is of interest to derive the analytical expression for the gain. In *Fig.* 5 is shown an equivalent circuit for the tone control. M is the gain of the amplifier tube including the loading effect of the tone-control network. Z_1 and Z_2 may be complex impedances (some combination of resistors and capacitors). From the equivalent circuit diagram one can write the three equations

$$E_I - E_O = (Z_1 + Z_2) \times I,$$
$$E_G = E_I - Z_1 \times I,$$
$$E_O = -M \times E_G.$$

Solving these equations simultaneously gives

$$Gain = \left|\frac{E_O}{E_I}\right| = \left|\frac{Z_2}{Z_1}\right| \times \left|\frac{1}{1+\frac{Z_1+Z_2}{M \times Z_1}}\right|.$$

If $Z_1 + Z_2/M \times Z_1$ is much smaller than unity, then to good approximation

$$Gain = \frac{Z_2}{Z_1}.$$

For the feedback control circuit herein described this approximation is always good if M is greater than 40, as it is for a 12AX7 triode. The gain of the tone control is then the ratio of two independent impedances Z_1 and Z_2. Variations in the gain M of the amplifier tube do not affect the frequency response so long as M remains greater than 40.

When M is large, E_G is effectively zero, and the amplifier tube grid is effectively at ground potential. Thus the amplifier tube grid is a "virtual ground." An easy way to see that this is so is to assume E_G to be zero, as it must be if the amplifier tube grid is indeed a "virtual ground," and then work out what the gain must be. Referring again to *Fig.* 5, for E_G equal to zero then $E_I = Z_1 \times I$ and $E_O = Z_2 \times I$. Therefore

$$Gain = \left|\frac{E_O}{E_I}\right| = \left|\frac{Z_2 \times I}{Z_1 \times I}\right| = \left|\frac{Z_2}{Z_1}\right|.$$

This is the same result that was obtained in the preceding paragraph; so the amplifier tube grid must be a "virtual ground" as stated. Then, since this grid acts like a ground point, examination of *Fig.* 5 shows that the load the tone control places on whatever circuit precedes it is Z_1, and the load on the amplifier tube plate circuit is Z_2.

The voltage gain of a 12AX7 triode, as shown in *Fig.* 3, is about 50, or 34 db. Since the maximum boost available from the tone control is about 10 times, or 20 db, the net inverse feedback in this circuit is always greater than 5 times, or 14 db. Thus, if this circuit is operated at the 1-volt signal level, the intermodulation distortion is 0.2 per cent or less. (Actually in the case of treble droop the amplification of the tube is less than 50 due to loading of the plate circuit by the tone-control network; however the inverse feedback is still greater than 14 db since the over-all gain of the tone-control circuit is less than unity.)

Since the output impedance of the tube shown in *Fig.* 3 is less than 40,000 ohms without feedback, the output impedance with feedback always greater than 14 db is always less than 1/5 of 40,000 ohms or 8,000 ohms.

A 4700-ohm resistor R_4 has been added in series with the output to reduce the effect of the phase shift which might otherwise be added to the feedback voltage due to heavy capacitive loading if a shielded output cable is used. Such loading could cause high-frequency oscillations if R_4 were not included.

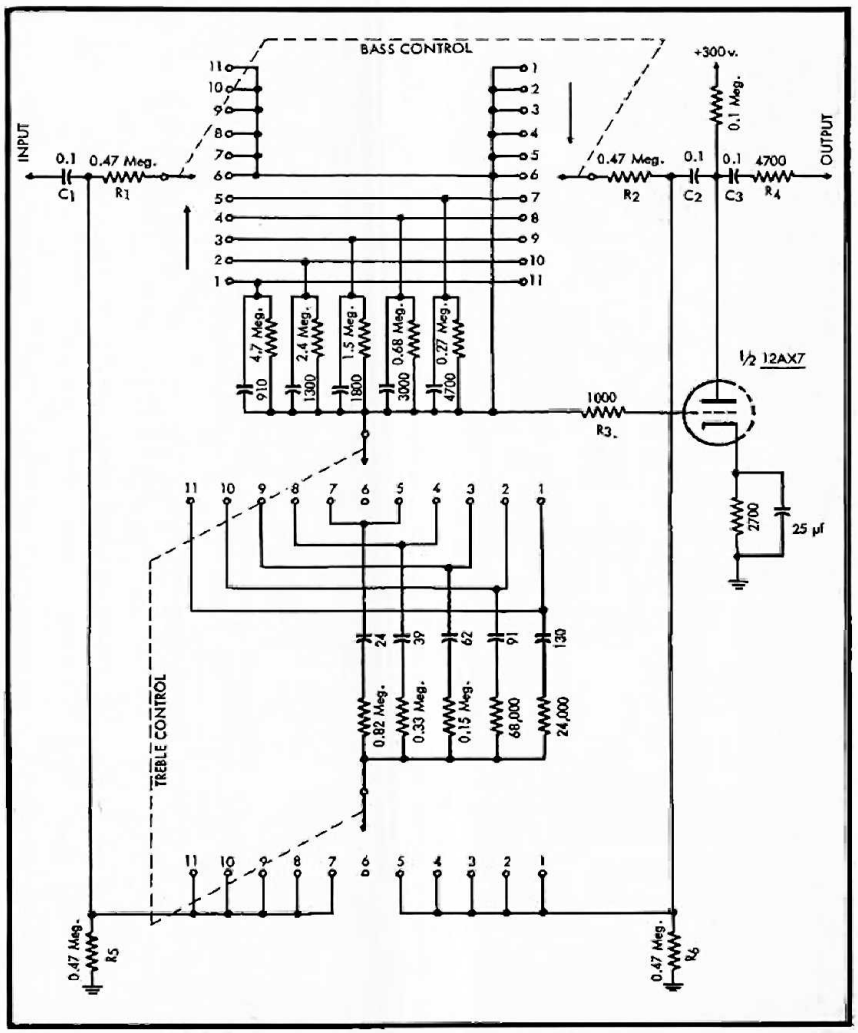

Fig. 3. The author's tone control. The switches allow optimum component-value selection for each condition and give good resettability.

This makes the total output impedance about 13,000 ohms. Loading the output with up to 400 μμf of capacitance reduces the output at 15,000 cps only 1 db when the tone control is set for maximum treble boost, and much less for other positions of the tone control. Thus, this tone-control circuit can also be used as a low-impedance output stage for an audio preamplifier unit, eliminating the need for an extra cathode-follower tube. (It should be pointed out that even though loading down the output like this does not greatly effect the frequency response of the circuit, it does reduce the amount of feedback somewhat, and this may increase the distortion level of the circuit. This also applies to the cathode follower and any other circuit which obtains its low impedance by negative feedback.)

Examination of *Fig.* 5 shows that the output impedance of the circuit preceding the tone control must be added to Z_1 when determining the gain of the circuit. In order for the preceding stage to have a negligible effect on gain its output impedance must be much smaller than Z_1. This is why the output impedance of the preceding circuit must be kept below 6500 ohms for the Baxandall circuit so that there is less than 1 db loss at 15,000 cps in the maximum available treble boost. Although preceding the tone control with a circuit whose output impedance is somewhat greater than these limiting values will reduce the maximum amounts of boost available, it will not affect the other characteristics of the circuit. If it is desired to precede the tone control with a circuit whose output impedance is somewhat greater, in the case of the switch-type tone control it is possible to compensate the treble-boost circuit to give the correct response, using the design technique to be described later.

If one compares the circuit in *Fig.* 3 with the Baxandall circuit, he will find that the fixed resistors R_1 and R_2 in the tone-control network are 470,000 ohms rather than 100,000 ohms, and that there is no 470,000-ohm resistor between the bass and treble controls. This change was made to increase the impedance of the tone control and hence reduce the limitations on the output impedance of the preceding circuit. For the circuit in *Fig.* 3 the maximum treble boost available at 15,000 cps is reduced by 1 db when the output impedance of the preceding stage becomes as high as 16,000 ohms and 4 db for 66,000 ohms. These impedances are approximately 3 times larger than the impedances for the Baxandall circuit. Although they are still low, it is now feasible to precede the circuit with a low-output-impedance voltage amplifier rather than a cathode follower. This could be done for the switch-type tone control without increasing the maximum impedance at the grid of the tone-control amplifier tube beyond 1 megohm because of the elimination of the 1-megohm bass-control potentiometer. The 470,000-ohm resistor in the Baxandall circuit is used to increase the impedance of the tone control at treble frequencies, but this is no longer needed in the switch-type unit. Even without any isolation between the treble and bass networks there is no interaction causing variation away from the predicted frequency response curves in any situation that would be normally encountered.

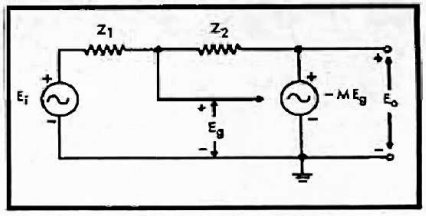

Fig. 5. Equivalent circuit of the tone control.

The choice of vacuum tube for the feedback tone-control circuit is not very critical. The pentodes 5879 and 6SJ7 give about the same gain without feedback as a 12AX7 triode in the circuits described. A high-*gm* pentode such as a 6AU6 will give much more gain before feedback, allowing more feedback to be used in the circuit. Any triode having a gain somewhat more than 10 can be used with only slight lessening of the maximum amount of boost available, although the amount of feedback will be less, with a consequent increase in distortion and output impedance. In the case of high-*gm* pentodes and triodes with low plate resistance, the magnitudes of the impedances in the tone-control network can be reduced, allowing long leads between the controls and the tube without affecting the performance of the circuit; but this requires a correspondingly lower output impedance in the preceding stage. Using pentodes will reduce the Miller effect which might otherwise adversely effect the treble-boost curves of some of the possible variations of the circuit. The Miller effect, however does not bother the circuit in *Fig.* 3 or the Baxandall circuit.

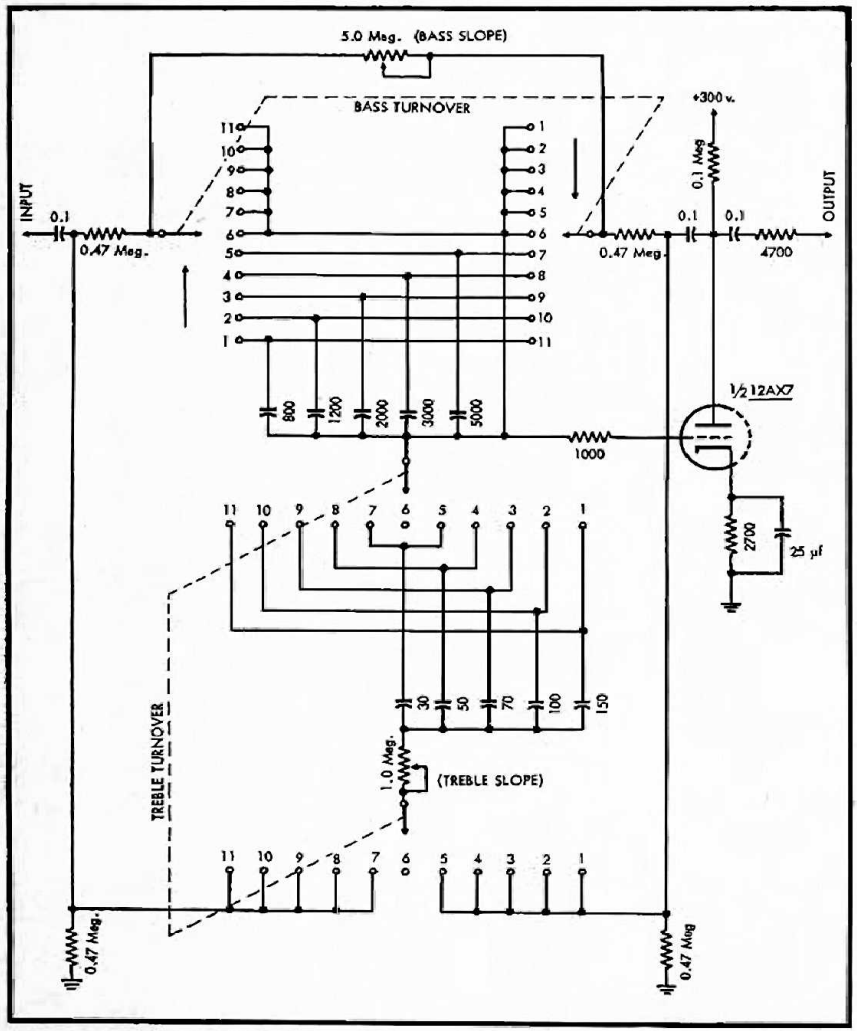

Fig. 4. This form of the tone control gives choice of turnover frequencies as well as control of the bass and treble slopes.

Variations

The switch-type feedback tone control is capable of many variations. It is en-

(*Continued on page 44*)

ATTENTION!

A fortunate purchase enables us to make available to you a very limited number of back issues of AUDIO and AUDIO ENGINEERING at 50¢ each, postpaid.

ISSUES AVAILABLE:

1953

- ☐ July
- ☐ August

1954

- ☐ January
- ☐ March
- ☐ April
- ☐ May
- ☐ June
- ☐ July
- ☐ September
- ☐ November
- ☐ December

- ☐ December

1955

- ☐ January
- ☐ February
- ☐ March
- ☐ May
- ☐ June
- ☐ July
- ☐ August
- ☐ November
- ☐ December

TERMS: CASH WITH ORDER.
NO OTHERS ACCEPTED.
NO DEALERS OR AGENTS.

REFUNDED IF SOLD OUT.

Just check copies wanted, enclose remittance in full and mail TODAY!

RADIO MAGAZINES, INC.
P. O. Box 629-T
Mineola, New York

TONE CONTROL CIRCUIT

(*from page 20*)

tirely possible to build a circuit giving the same curves as the original Baxandall circuit. In *Fig.* 4 is shown a circuit with four controls so that the turnover frequencies and the slopes of the bass and treble can all be varied nearly independently. The switches with the capacitors select the turnover frequencies determine boost or droop. The continuously variable resistors vary the slopes of the tone control curves with only negligible changes of the turnover frequency.

How to design a tone control circuit with any arbitrary set of frequency curves will be shown in the following paragraphs. If it is desired to precede the tone control with a circuit whose output is greater than 16,000 ohms, in the case of the switch type tone control it is possible to design a tone control that will give the desired response for some particular driving impedance.

To show how the tone control frequency responses can be easily calculated, the equivalent circuit for bass boost is shown in *Fig.* 6, leaving out those circuit elements which do not affect the bass response. (C_1, C_2, R_5, and R_6 in *Fig.* 3 are just for coupling the tone-control network into the circuit and do not affect the operation of the bass or treble controls.) Then

$$Gain = \frac{|Z_1|}{|Z_2|} = \frac{\left| R_1 + \dfrac{1}{\dfrac{1}{R_2} + j\omega c} \right|}{|R_1|} = \left| \frac{1 + \dfrac{R_1 + R_2}{j\omega C R_1 R_2}}{1 + \dfrac{1}{j\omega C R_2}} \right|.$$

From this we can immediately see that the upper turnover frequency is

$$f_1 = \frac{1}{2\pi} \frac{R_1 + R_2}{C R_1 R_2}$$

and that the lower turnover frequency is

$$f_2 = \frac{1}{2\pi} \frac{1}{C R_1}.$$

The general form of the response is sketched out in *Fig.* 8(A). The gain above the upper turnover frequency is asymptotic to unity. Between the two turnover frequencies the gain is asymptotic to a line with a slope of 6 db per octave or

$$Gain_{asymptotic} = \frac{f_1}{f}$$

at frequency f. Below the lower frequency the gain is asymptotic to a fixed value f_1/f_2 or

$$Gain_{asymptotic} = S = \frac{f_1}{f_2} = \frac{\dfrac{R_1 + R_2}{2\pi C R_1 R_2}}{\dfrac{1}{2\pi C R_2}} = \frac{R_1 + R_2}{R_1}.$$

In the equivalent bass-boost network (*Fig.* 6) there are three component values R_1, R_2, and C. R_1 is given as 470,000 ohms, and the other two are unknown. These two can be determined by selecting values for two of the parameters for the bass-boost response curve. The author finds it most convenient to use the upper turnover frequency f_1 and S, which he calls the shape factor. Then solving the above equations for R_2 and C gives

$$R_2 = (S - 1)\ R_1, \text{ and } C = \frac{R_1 + R_2}{2\pi f_1 R_1 R_2}.$$

A set of universal response curves for various values of S is shown in *Fig.* 9. In the process of synthesizing a tone control curve, first choose a value of S to give the desired shape for the curve, giving a value for R_2. Then pick the desired turnover frequency f_1, giving a value for C. A useful auxiliary relationship is that the maximum boost in db for a given

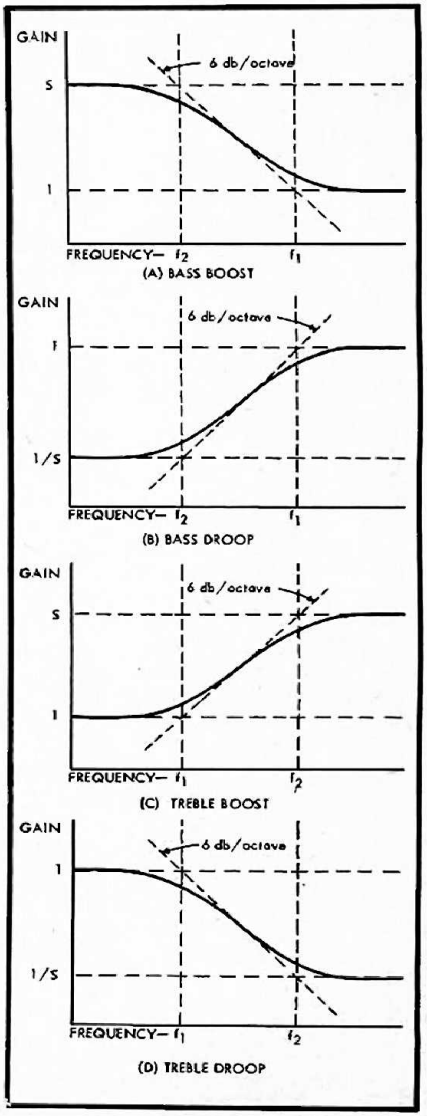

Fig. 8. Generalized curves for the equalizer frequency responses.

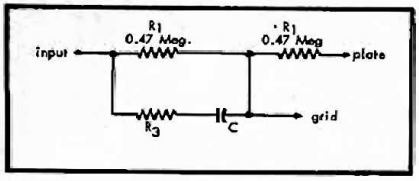

Fig. 6. Equivalent circuit for bass boost.

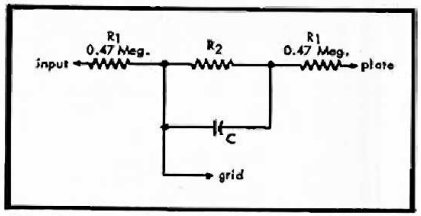

Fig. 7. Equivalent circuit for treble boost.

value of S equals $20 \log_{10} S$. Bass droop can be obtained using the same circuit by merely interchanging the input and plate connections, so the same relationships can be used for synthesis of the bass-droop curves. The general form of the response is sketched out in *Fig.* 8(B).

The treble boost can be calculated in an entirely analogous manner. The equivalent circuit is shown in *Fig.* 7. Proceeding as before,

$$Gain = \frac{|Z_2|}{|Z_1|} = \frac{|R_1|}{\left|\dfrac{1}{\dfrac{1}{R_1} + \dfrac{1}{R_3 + \dfrac{1}{j\omega C}}}\right|} = \frac{|1 + j\omega C(R_1 + R_3)|}{|1 + j\omega C R_3|}.$$

Hence the lower turnover frequency is

$$f_1 = \frac{1}{2\pi} \frac{1}{C(R_1 + R_3)},$$

the upper turnover frequency is

$$f_2 = \frac{1}{2\pi} \frac{1}{CR_3},$$

the gain below the lower turnover frequency is asymptotic to unity, and the shape factor is

$$S = \frac{f_2}{f_1} = \frac{2\pi C(R_1 + R_3)}{2\pi C R_3} = \frac{R_1 + R_3}{R_3}.$$

This shape factor is the same as the one used for the bass, and the curves in *Fig.* 9 can be used. The equations for determining R_3 and C are then

$$R_3 = \frac{R_1}{S - 1}, \text{ and } C = \frac{1}{2\pi f(R_1 + R_2)}.$$

The equivalent circuit for treble droop is the same for treble boost except that the input and plate connections are interchanged, so the same equations can be used. The general form of the treble curves for boost and droop are shown in (C) and (D) of *Fig.* 8.

If the output impedance R_o of the stage preceding the tone control circuit is not negligible, then

$$Gain = \frac{|Z_2|}{|Z_1|} = \left(\frac{R_1}{R_1 + R_2}\right) \left|\frac{1 + j\omega C(R_1 + R_3)}{1 + j\omega C\left(R_3 + \dfrac{R_1 R_0}{R_1 + R_0}\right)}\right|$$

for the case of treble boost. From this it can be shown that

$$R_3 = \frac{R_1}{S - 1}\left(1 - \frac{SR_1R_0}{R_1 + R_0}\right), \text{ and } C = \frac{1}{2\pi f(R_1 + R_3)}.$$

Similarly for the case of bass droop

$$Gain = \frac{|Z_2|}{|Z_1|} = \left(\frac{R_1}{R_1 + R_0}\right) \left|\frac{1 + \dfrac{R_1 + R_0 + R_2}{j\omega C R_2(R_1 + R_0)}}{1 + \dfrac{1}{j\omega C_2}}\right|,$$

$$R_2 = (S - 1)(R_1 + R_0), \text{ and}$$

$$C = \frac{R_1 + R_0 + R_2}{2\pi f_1 R_2 (R_1 + R_0)}.$$

R_0 does not affect the frequency response of the treble droop or bass boost, but it does reduce the over-all gain by a constant amount $R_1/R_1 + R_0$ as it does in the other two cases.

The method described for determining the frequency response of the tone control is really quite general and can be applied to the design of other types of tone controls and equalizers. Although the exact equations may be different, the universal response curves in *Fig.* 9 are always the same, provided only equalization networks with a single effective reactance element are used.

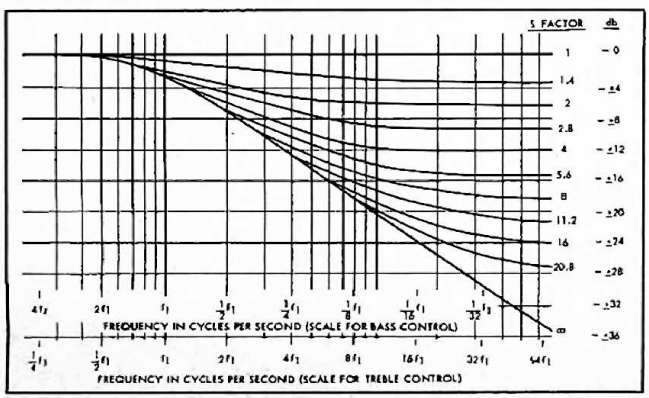

Fig. 9. These universal frequency curves are used in conjunction with the material in the text to calculate variations on the basic circuitry.

Hi . . . Mr. Hi Fi
This is It . . .

The BRADFORD Perfect BAFFLE*

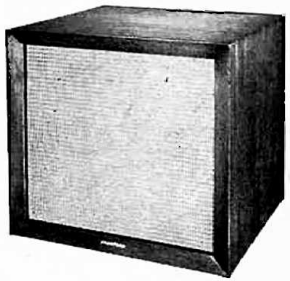

Radically new idea in loudspeaker enclosures. Not a bass reflex or folded horn.

The primary purpose of a loudspeaker enclosure is to prevent destructive sound cancellation that takes place at low frequencies, when the front and rear waves, emanating from both sides of the speaker cone, merge.

It is obvious that no rear waves can escape through a totally enclosed cabinet, and it would be the perfect baffle, except for one reason. The air pressure within the cabinet acts as a cushion upon, and therefore restricts, cone movement. This causes loss of life and color.

The BRADFORD Perfect BAFFLE is totally enclosed, yet it relieves cone pressure by an ingenious device that operates in unison with cone movement.

Since this action conforms to an ultimate scientific principle, the BRADFORD Perfect BAFFLE is the only enclosure that can give you the utmost in sound reproduction.

And that, specifically, is . . .

ALL THE BASS, full, rich, clean bass, clearly distinguishing each contributing instrument, down to the lowest speaker frequency.

NO BOOM. Absolutely no boom. Boom, or "one note" bass, is not high fidelity.

NO FALSE PEAKS. Does not "augment" bass by false peaks that are really distortions.

ANY SPEAKER. Accommodates any speaker . . . any size, weight, shape or make.

NO TUNING. No port tuning or speaker matching.

ANY POSITION. Operates in any room position.

NO RESONANCES. No false cabinet or air resonances.

COMPACT. Sizes: for 8" & 10" speakers, 12" x 12"; 12", 14" x 14"; 15", 17" x 17". Prices: finished $39.50, $59.50, $69.50 respectively. Unfinished birch $34.50, $49.50 and $59.50.

REAL HARDWOODS. In all popular finishes . . . mahogany, blond, ebony, walnut.

INCOMPARABLE CONSTRUCTION. Hand made, hand finished . . . by master craftsmen. All walls ¾" thick.

GUARANTEED. Unconditionally guaranteed to out-perform any other enclosure now available regardless of size, weight or price.

If you want the very best speaker enclosure and will not be misled as to real performance by deceptive size or price, see your audio dealer at once. A demonstration will convince you. Or write for literature.

BRADFORD
Perfect **BAFFLE**
BRADFORD & COMPANY
27 E. 38th St. NEW YORK 16, N. Y.

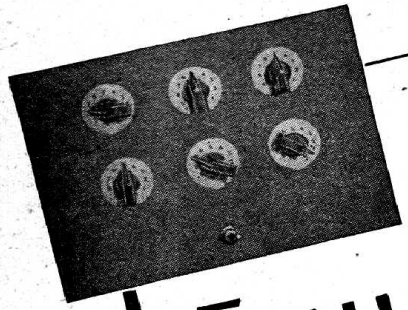

Response Equalization

By J. W. STRAEDE

MOST reproducing or recording systems require some form of frequency response correction. The bass or lower frequencies may be attenuated in recording or high frequencies may need emphasizing after passing through a selective radio tuner.

The majority of "tone controls" affect the high-frequency response only, and then only between fixed limits. A few amplifiers are provided with attenuators for low frequencies, but again the rate of attenuation and frequency from which attenuation starts are fixed.

In the system described here, the bass attenuation may start at any of 5 (or more) frequencies, the attenuation may be kept constant below a given frequency or the amount of attenuation may be varied. But that is not all. The lower frequencies may be emphasized or boosted below any of 5 (or more) frequencies, and the amount of boost is controllable. *It is even possible to boost some low frequencies while attenuating others.*

The same thing goes for the high-frequency end of the spectrum, except that in the practical version of the circuit, no provision is made for rate of attenuation above a determined frequency and, instead, sharper cutoff is provided as this is generally more useful.

Response correction types

What are the commonly required types of response correction? There are bass attenuation combined with slight high-frequency boost for ordinary recording, bass boost with extreme high-frequency boost for orthacoustic recording, the opposites of these first two for reproduction; large bass boost at very low frequencies below the main speaker resonances, high-frequency equalization for good crystal pickups, and the same with a boost of only the infra-low bass for cheaper crystal pickups.

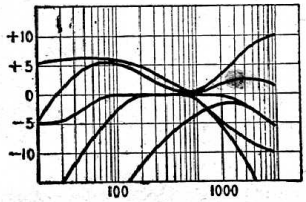

Fig. 1—A few forms of response correction.

Some of the possible frequency corrections are shown in Fig. 1, a maximum variation of about 10 db being obtainable except for the high-frequency attenuation which can be obtained at the rate of about 12 db per octave.

Simple circuit used

These boosts and attenuations are obtained with a relatively simple circuit. There are no multigang potentiometers, no inductance to pick up hum, and no nonstandard parts. All the work is done by ordinary radio resistors, condensers, switches, and potentiometers. The tolerance of the resistors may be 10% and that of the condensers 15% before any noticeable effect occurs (unless, of course, the circuit is used to equalize some amplifier within 1 db for laboratory work).

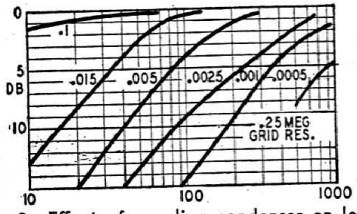

Fig. 2—Effect of coupling condenser on lows.

The whole job is very compact if the power supply is taken from the rest of the amplifier. The single 6J7 or 6SJ7 tube provides a mid-frequency gain of about 10 db after loss in the circuit has been allowed for. All the results are obtained by well-known circuit networks.

Coupling condensers

It is well known that coupling condenser size affects low-frequency response. What is not so well known is that the size of the condenser also determines the frequency from which bass attenuation takes place (that frequency is the one at which attenuation is 2 db). The rate of attenuation is approximately 6db per octave and this rate does *not* depend on condenser size.

In most recording work, the attenuation must start from 250 to 700 cycles, while in public address work the bass cut must begin at about 1,000 cycles when maximum intelligibility and extreme audibility are required. So the first step in designing the circuit was to provide a variable coupling condenser (actually a number of condensers controlled by a simple 5-way switch). A simple rule for determining the frequency at which attenuation commences is

$$f = \frac{R}{5C}$$

where R is the grid resistance in megohms and C is the size of coupling condenser in microfarads. The effects of these condensers is shown in Fig. 2. It might be argued that only a limited number of capacitances is obtainable, but in practice the capacitance is not at all critical.

Amount of low-frequency attenuation is controlled by varying a resistance shunted across the coupling condenser (see Fig. 3). Actually the maximum value of the variable resistance limits the amount of attenuation obtainable—this is usually not of importance, but if necessary the end of the resistance element can be scraped away so that circuit can be opened completely.

Low-frequency boost

The method for boosting the bass is to attenuate to a fixed degree all frequencies above a certain point. This is done by a voltage divider such as is shown in Fig. 4, the lower arm consisting of a resistor and condenser in series. The frequency below which the boost starts is controlled by the condenser size, the maximum rate of boost being

nearly 6 db per octave. Just where the bass boost is to be introduced is decided by the work to be done. When English records are to be played with a "flat" pickup, the boost should commence at about 250 cycles, while for American

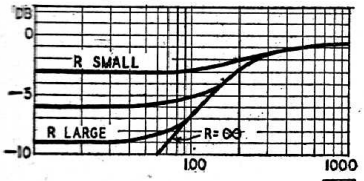

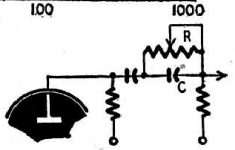

Fig. 3—Bass attenuation control and its effect on tone.

records the boost should start nearer the 700 cycle mark.

To reduce the amount of bass boost the condenser is shunted by a variable resistor. It should be noted that the graphs of Figs. 3 and 4 are similar except that one is inverted; but remember that the bass boost and bass cut can start at different frequencies so that a hump or a dip may be obtained around some frequency.

In Fig. 5 the complete circuit for low-frequency compensation is shown. The values are those which have been found most suitable in practice. Remember that resistor size controls *amount* of attenuation while condenser size controls the *frequency* at which a cut or boost commences.

High-frequency equalization

It is well known that high-frequency signals can be attenuated by shunting a condenser between the plate and cathode of a tube. The rate of attenuation at higher frequencies is 6 db per octave, the starting frequency being decided by the type of tube, size of load resistor, and size of shunt condenser. (The load resistor includes the grid resistor effectively connected in parallel as regards h.f. with the resistor that goes to the high-frequency supply.)

For a given product of capacitance and load resistance, a pentode tube gives greater attenuation than a triode, an approximate formula for the attenuation of a pentode being:

$$\text{Attenuation in db} = 20 \log \frac{Xc}{\sqrt{R^2 + Xc^2}},$$

where R is resistance of load and Xc the reactance of the shunt capacitor

$$(Xc = \frac{1}{2\pi fc}$$

where f is the frequency in cycles per second and C is the capacitance in farads).

Such a shunt condenser may not provide sufficiently sharp cutoff. An extra attenuation of nearly the same rate may be obtained by using another shunt condenser at a later point in our circuit, for example, after the ¼-megohm resistor that supplies signal to the bass-boost network. The reactance of this condenser, as a first approximation, should bear the same ratio to the 0.025-megohm resistor as the anode shunt condenser bears to the 0.1-megohm anode resistor.

To prevent too much attenuation of the highs when ordinary records (which have only a limited h.f. boost) are played, a resistor may be connected in series with the by-pass condensers, although most people seem to prefer fairly sharp attenuation. High-frequency boosting is wanted for recording and for the realistic reproduction of speech—the former requires a boost commencing at about 1,000 cycles, the latter from 5,000 cycles or from wherever the microphone and speaker performance begin to fall off.

The easiest way to obtain the boost is to connect a small condenser in paral-

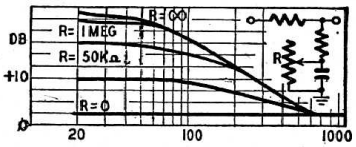

Fig. 4—Circuit and effect of bass booster.

lel with the ¼-megohm resistor that reduces the mid-frequency gain by about 20 db. This shunt condenser reduces the

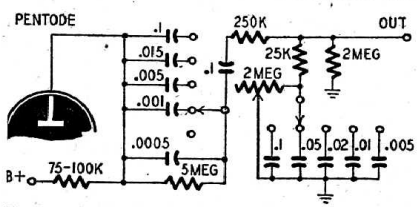

Fig. 5—Practical low-frequency compensator.

loss from over 20 db to about 11 db at high frequencies, so an effective boost of nearly 10 db is obtained. Just as in the rest of the circuit, the capacitance of the condenser is inversely proportional to the frequency at which any given amount of boost occurs, a small condenser of the order of 100 micro-microfarads being required for boosting the frequencies around 10 kilocycles, and about 10 times this capacitance for recording. As shown in Fig. 6, a switch is used to change the capacitance. To control the amount of boost and to keep the rise in gain limited to a certain frequency band, a variable resistor is connected in series with the boost condenser.

Fig. 7 is the final practical circuit. A controls the frequency of bass cut, and B the frequency of bass boost. C controls the amount of bass boost. D varies the frequency of cutoff of highs, while E controls the frequency of high boost, and F its amount.

This final circuit is simplified by omitting the variable resistor that had been connected in series with the high-frequency attenuating condensers and also the variable resistor that had been connected across the low-frequency attenuating condensers. It was found that it was far more important to be able to control the frequencies at which attenuation started than to control the amount of attenuation.

Setting of controls

For recording on discs, the low-frequency attenuator (*A* in Fig. 7) is set to give a fair amount of attenuation. If the recording is done at over 100 lines per inch, the 0.001-μf coupling condenser is used, otherwise the 0.005-μf condenser gives enough reduction. Pipe-organ and dance-band music usually require greater attenuation than a female chorus or soprano singer. If an orthacoustic response is required, a bass boost is provided at the very low frequencies by turning the 2-megohm resistor *C* to maximum value and setting *B* to 0.05 μf. Otherwise *C* is left at minimum resistance and the setting of *B* is unimportant.

The high-frequency attenuator *D* is turned off and the high-frequency boost controls are adjusted. *E* is set to about the middle position and *F* adjusted to a value of about 0.25 megohm (for a boost of about 5 db).

(Continued on page 77)

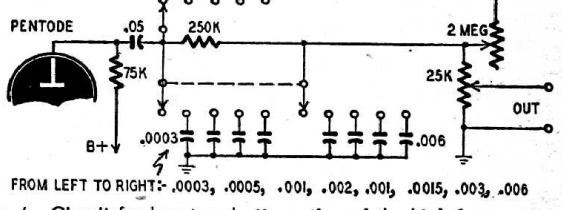

Fig. 6—Circuit for boost and attenuation of the high frequencies.

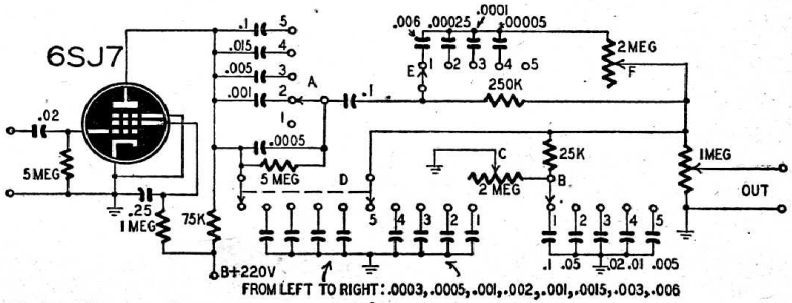

Fig. 7—This complete practical circuit combines all the features of previous figures.



. . . but rush your order anyhow. We guarantee to refund your money in full if the units do not meet with your complete approval after a 10-day FREE trial.

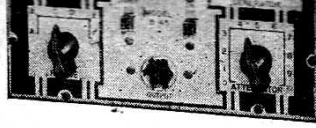

Specifications of Model M-50

- Accurate Pocket size 1000 ohms per volt V.O.M.
- 4 A.C. VOLTAGE RANGES: 0-15/75/300/1500 volts.
- 4 D.C. VOLTAGE RANGES: 0-15/75/300/1500 volts.
  2 D.C. CURRENT RANGES: 0-15/150 MA.
- 2 RESISTANCE RANGES: 0-10,000 ohms; 0-1 Megohm.
- Attractive modern black & white panel.
- Beautiful hand-rubbed oak case. Complete with test leads and all operating instructions.

Specifications of Model I

Generates RF frequencies from 150 Kc. to 50 Mc. Modulation is ac plished by grid-blocking action—equally effective for alignmer amplitude and frequency modulation as well as for television recei Self-contained batteries. All calibrations etched on front panel DIRECT READING. Beautiful processed dualtone front pan heavy gauge crystalline steel cabinet. Complete with test leads self contained batteries.

20% deposit required on all C.O.D. orders.

MOSS ELECTRONIC DISTRIBUTING CO.

68 WESTCHESTER S
Dept. RC-9 New York 61

RESPONSE EQUALIZATION

(Continued from page 35)

When playing back, the position is quite different. Unless orthacoustic recordings are to be played, there is no low-frequency attenuation. *A* is set to 0.1 μf (to 0.005 μf for orthacoustic), and a bass boost is provided by setting *C* to maximum value and then adjusting *B* for the frequency at which the boost is to begin, 0.01 to 0.02-μf being the values generally employed.

For public-address work with a good microphone, the controls are set as follows:

A to 0.005-μf; *B*, anywhere; *C*, at minimum resistance; *D*, off; *E*, at 50 μμf; *F*, at minimum resistance or about 0.25 megohm.

The setting assumes that a good speaker is to be used and the amplifier is not being overrun. *If as much intelligible sound as possible is required without regard to naturalness*, then the setting is modified to:

A, at minimum capacity; *B*, anywhere; *C*, off; *D*, at from 0.0005/0.0015 μf (middle position); *E*, at from 0.00025 μf or 0.0006 μf; *F*, at almost minimum resistance.

The 6 controls (and an on-off switch) are mounted on a panel 10 inches by 7 inches, and a metal case affords screening against hum. A much smaller case could have been used, but space was allowed for a power-pack.

NEW LOW PRICE

SPEAKERS

5" P.M. Alnico 5 Magnet, each $1.09
6 for $6.00

6" P.M. 2.15 oz. Alnico 5 Magnet, each 1.69
6 for $9.00

All other sizes in stock, at money-saving prices.

AUTO RADIO SUPPLIES

OZ4 TUBES, each..... 89c
Minimum order, 6

SPARK Plug SUPPRESSORS .11
See our Catalog for full line of auto aerials.

PHONO SUPPLIES

Crystal Pickup Arms..... 2.49
Webster No. 50 Changer..21.17
Webster No. 56 Changer..26.66
Webster No. 70 Changer..43.20
Free $2.50 permanent needle with each changer.

Volume Controls

½ MEG. volume control with switch and long shaft, ea. 49c
6 for $2.75

Money KITS Saving

100 Insulated Resistors, ½, 1 & 2 Watt..... $1.95
20 Assorted Wire Wound resistors... 1.95
50 Popular Assorted Mica Condensers.. 2.50
20 Assorted Tube Sockets..... 1.00
20 Assorted Trimmers 1.00

15 ASSORTED VOLUME AND TONE CONTROLS (less switches) $1.95

I.F.'s 455 KC..... 39c

WIRE

400 ft. (approx.) of wire in assorted colors and gauges, solid & stranded in 2 to 4 feet lengths, per pkg..... 99c

CONDENSERS

Tubular Paper (600

Mfg.	Price Ea.	Pe
.01	.08	$
.02	.08	
.05	.10	
.1	.12	
.25	.17	
.001	.08	
.002	.08	
.005	.08	
.006	.08	
.5	.26	

"Illinois" Electrol

Mfd.	VDC	Pri
10	25v	
100	25v	
12	50v	
16	150v	
20	150v	
24	150v	
30	150v	
50	150v	
8	450v	
10	450v	
16	450v	
20	450v	
40	450v	
100	15v	

"Illinois" Dua

16-16	150v
20-20	150v
30-30	150v
40-20	150v
50-30	150v
8-8	450v
10-10	450v
20-20-20	150v

10% discount on all elect purchased in lots of 10
Mica Condensers, all sizes

HEAVY DUTY POWER TRANSFORMER

Thordarson T70R62. 115V. 60 Cycle primary. Secondary 700 V.C.T. @ 145ma., 6.3V. winding @ 4.5 amps; 5V. winding @ 3 amps. Special price while limited quantity lasts $3.95

12lbs. SURPLUS ELECTRONIC PARTS $

A gold mine of parts for repairmen, amateurs, a menters . . . sockets, condensers, resistors, tra coils, hardware, wire, etc., etc. An outstandin in usable parts! Send $2.00 cash, check or M. (Pay small express charges on receipt.)

Minimum Order $3.00—20% with Order, Balance C.O.D.—WRITE FOR CATALOG.
TWO CONVENIENT PLACES FROM WHICH TO ORDER. PLEASE ADDRESS DEPT. C9

ELECTRONIC DISTRIBUTORS, INC.
620 W. Randolph St., Chicago 6, Ill

ELECTRONIC PARTS CO
436 W. State St., Milwaukee

Electronic TUBES

TUBE DEPARTMENT
GENERAL ELECTRIC
Schenectady 5, N. Y.

G-E HAM NEWS

Copyright 1955, by General Electric Company

MARCH-APRIL, 1955 VOL. 10–NO. 2

HIGH ATTENUATION LOW-PASS AUDIO FILTER

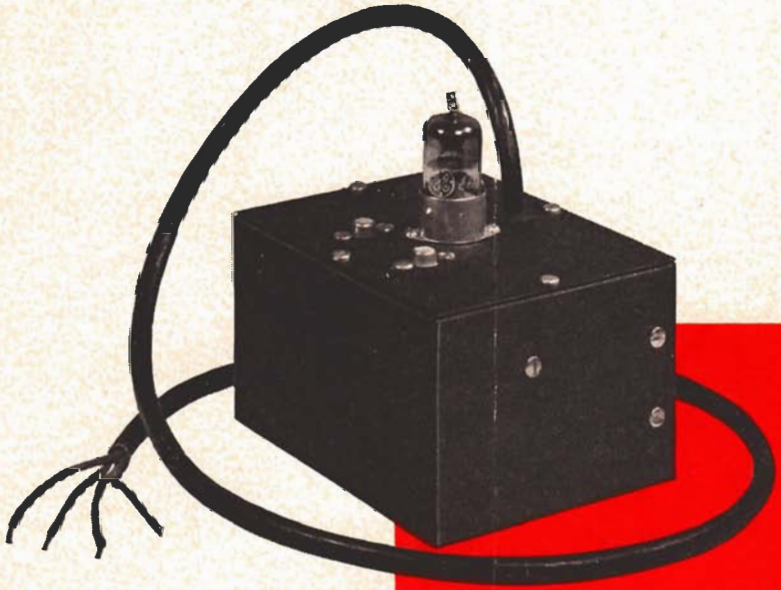

This audio filter for receiver or speech amplifier uses inexpensive unshielded coils plus a few of W2KUJ's slick tricks to obtain an attenuation slope approaching that possible with high-priced toroid coils.

—Lighthouse Larry

INTRODUCING A NEW COLUMNIST FOR "OPERATION CRYSTAL"

CONTENTS

"Operation Crystal" ..... page 2
Low-pass Audio Filter ..... page 3
Thumbnail Theory ..... page 6
Sweeping the Spectrum ..... page 7

LOW-PASS AUDIO FILTER

A sharp cut-off low-pass filter is a great help in eliminating the annoyance of heterodynes and noise beyond the range necessary for completely satisfactory 'phone reception. The filter described here is an inexpensive and highly effective weapon in the fight against QRM. Used in the speech system of a transmitter, this filter reduces the spectrum space occupied by the signal, while actually increasing the effectiveness of the transmission. It is connected as shown in Fig. 1.

Because the filter is intended for a variety of applications, a vacuum tube is employed to provide high input and low output impedance. Thus, all the requirements of impedance matching for the passive elements of the filter are satisfied internally and are not disturbed when the filter is interposed between a wide variety of devices.

The design cut-off frequency of the filter pictured on the cover of this issue of G-E HAM NEWS is 3000 CPS, a figure generally considered adequate for voice communication. Design data is given for the prototype low-pass filter in "Thumbnail Theory" for those who want to design their filter for a different cut-off frequency. It is suggested that the 3000 CPS cut-off design be used unless it is certain that a different cut-off point is required for some specific application.

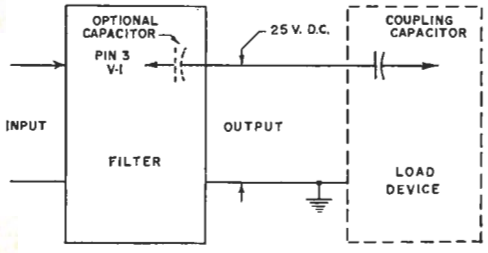

Fig. 1 Diagram for connecting the low-pass filter to the input and load devices.

CONSTRUCTION

The entire filter is housed in a 3 x 4 x 5-inch utility box drilled as shown in Fig. 2. The tube socket, input and output jacks are mounted on one cover. Although the filter elements are not in "cramped" space, a certain amount of clearance is required between coils in different filter sections. The circuit diagram and parts list are shown on page 5.

The six 125-mh coils are mounted on the aluminum brackets shown in Fig. 3 with 6–32 brass machine

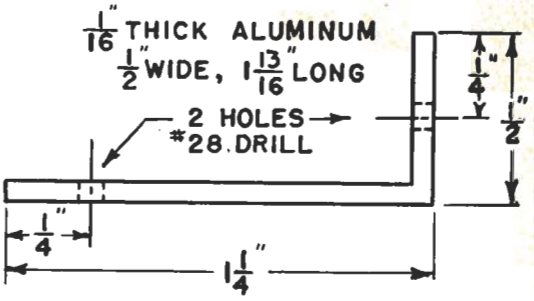

Fig. 3 Mounting brackets for the coils.

screws 1 inch long which pass through the centers of the coils. The brackets are then fastened to the 3 x 4-inch ends of the box, as pictured in Fig. 4. Note how L_1 and L_6 are mounted with respect to the other coils. All the wiring between the coils, condensers C_1, C_2, C_3 and the 2400-ohm terminating resistor is done with the covers removed. Attach 4-inch leads to the input end of L_1 and the output end of L_6 for later connection to the tube socket.

The brackets holding L_1 and L_6 should not be securely tightened until after performance tests are completed. Do not rely on the steel box to provide the ground path indicated in the circuit diagram. Instead, run a lead to the grounded ends of C_1, C_2 and R_4, and bring this lead out to the ground points on the top cover. Heater and plate power are supplied through a four-conductor cable anchored to the cover.

TESTS

After a wiring check, heater and plate voltage can be applied. Approximately 25 volts DC should appear across the output resistor. If the correct values of inductors and capacitors have been used, the performance

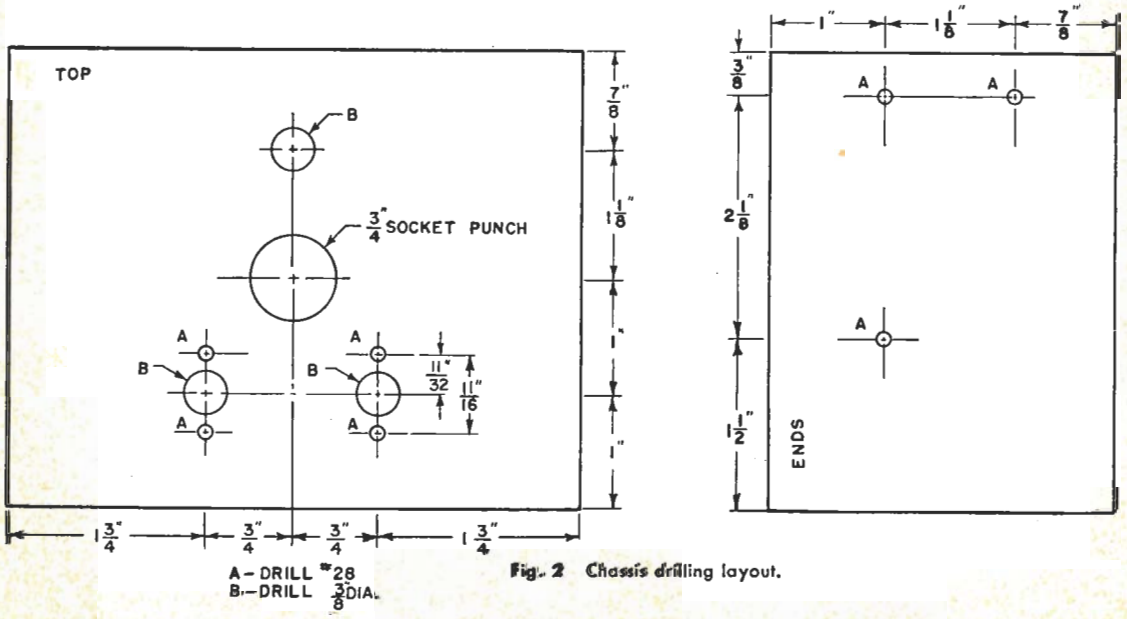

Fig. 2 Chassis drilling layout.

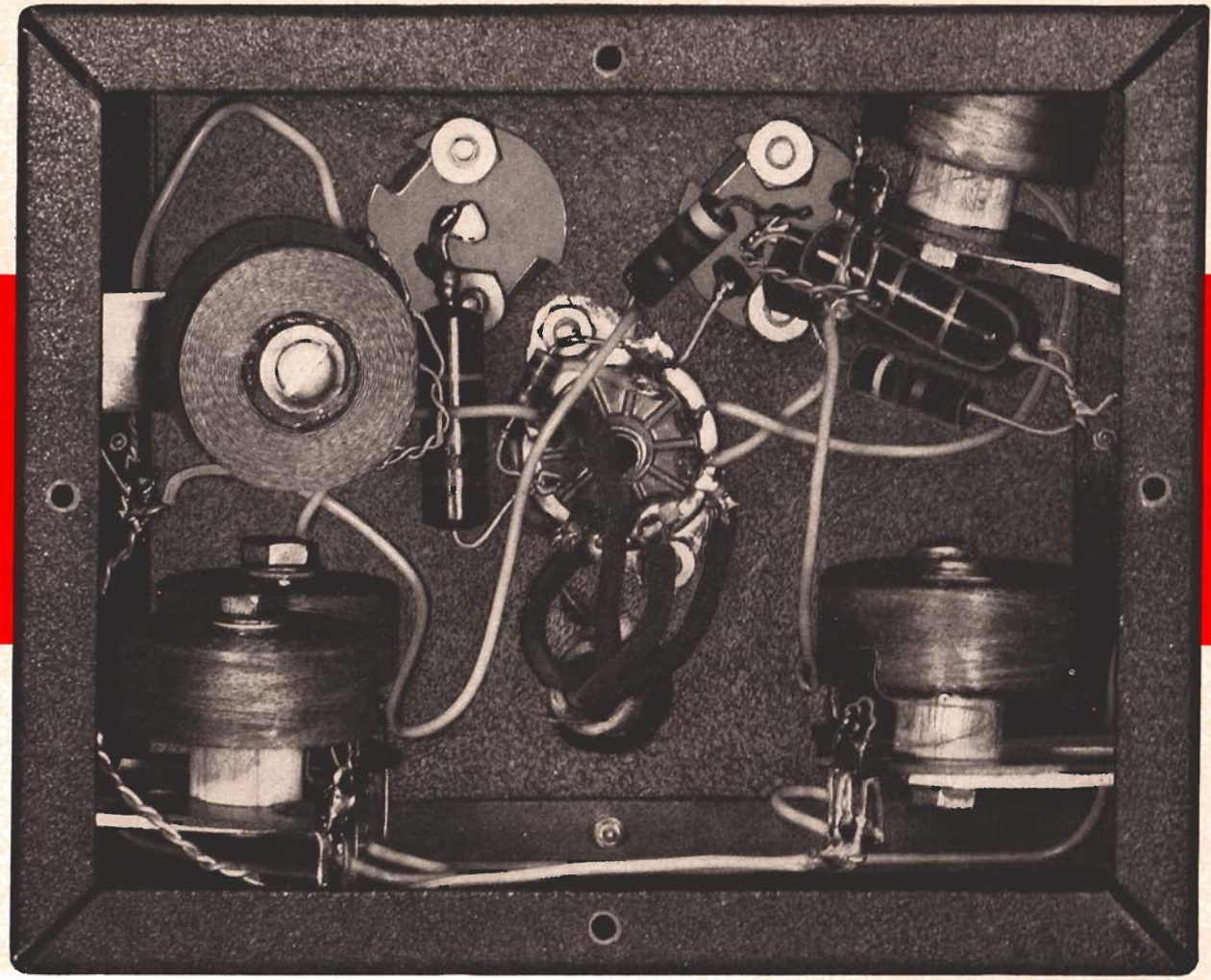

Fig. 4 Bottom view of filter showing socket placed with pins 1 and 9 toward phono jacks. Solder lugs under coil bracket mounting screws are used as ground tie-points for C_1, C_2 and C_3.

Fig. 5 Schematic diagram

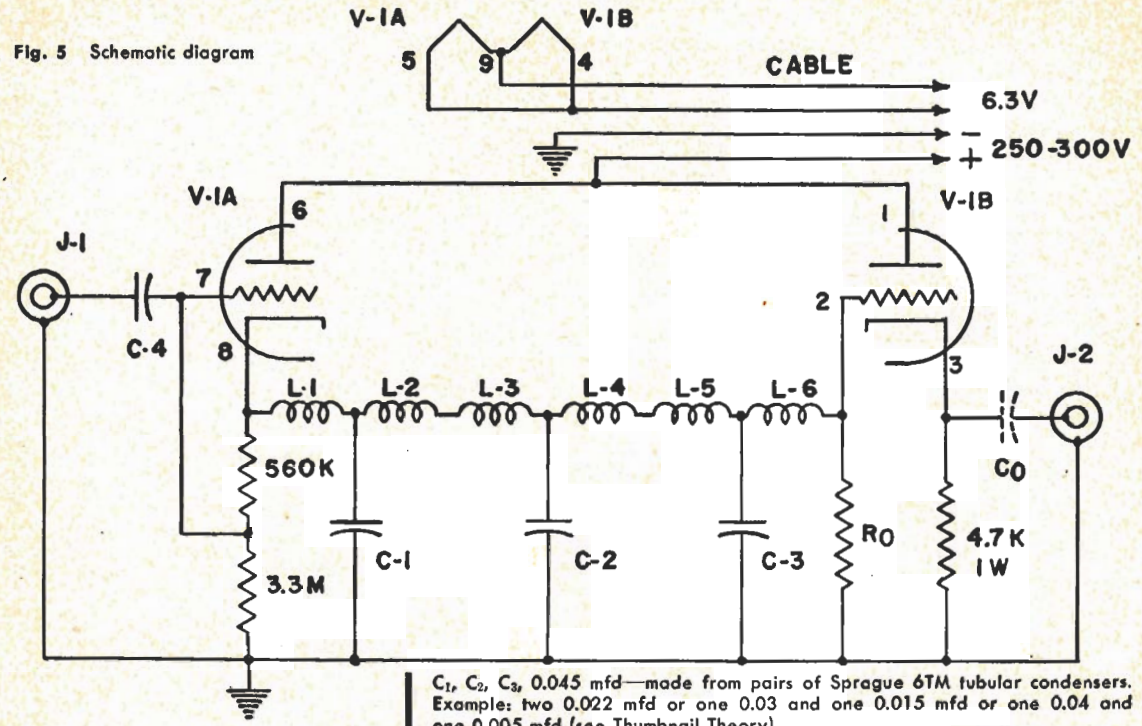

PARTS LIST

C_1, C_2, C_3, 0.045 mfd—made from pairs of Sprague 6TM tubular condensers. Example: two 0.022 mfd or one 0.03 and one 0.015 mfd or one 0.04 and one 0.005 mfd (see Thumbnail Theory).
C_4—0.01 mfd, 600 volts.
C_0—Capacity dependent on load impedance, see text (Application).
J_1, J_2,—Cinch shielded phono jacks.
L_1,—L_6—125 mh RF chokes (Meissner 19-6848).
R_0—2400 ohms, 1 watt ±5%.
V_1—12AT7 tube.
All resistance values in ohms, ½ watt ±20% except as noted. K = 1000.

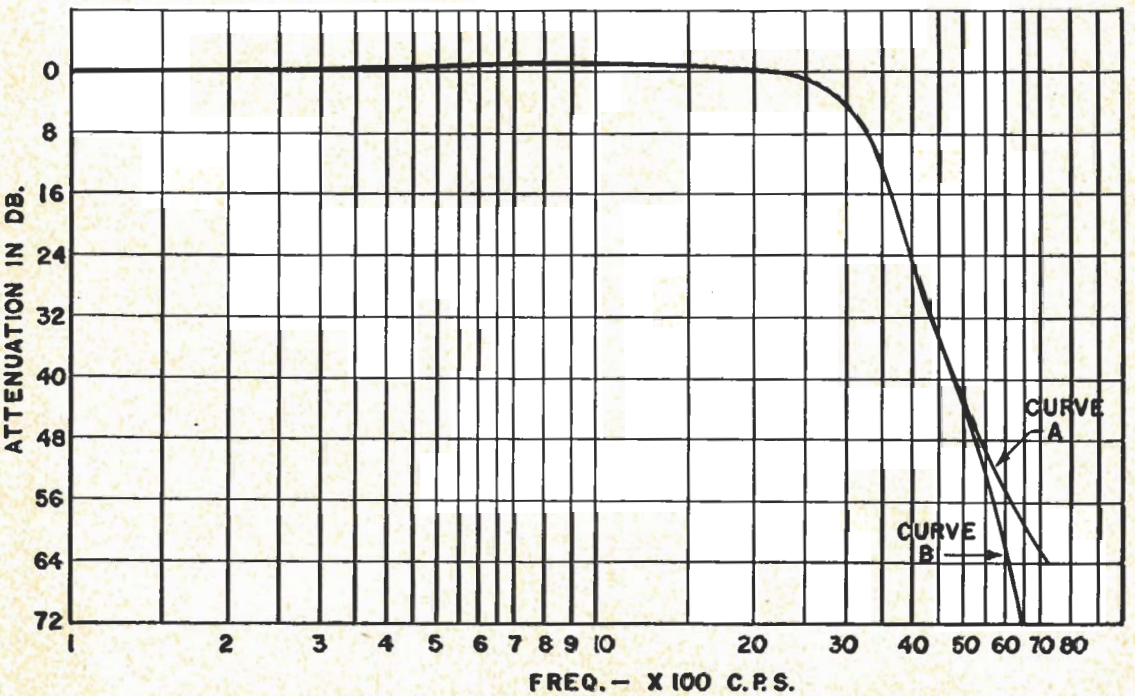

Fig. 6 Response curves with and without coils oriented.

will be that shown by the curve "A" of Fig. 6, at least to an attenuation of 30 db without any further work on your part. Usually an improvement in attenuation at frequencies higher than 4000 CPS can be made by orientation of L_1 and L_6, if suitable measuring equipment is available. Tests made by ear alone are not sufficiently reliable to warrant the effort. A reliably calibrated audio oscillator covering a range from 100 to 10,000 CPS at an output voltage of about 10 volts RMS, and an output indicator covering a range of at least 60 db (1000 to 1 in voltage) are required.

In case orientation of L_1 and L_6 through a few degrees does not allow an attenuation of 60 db or more to be obtained at 6000 CPS, reversal of connections to either L_1 or L_6 (but not both) should allow the performance shown in curve "B" to be equalled or surpassed in the region of high attenuation. The final adjustment of the filter model shown in the illustrations was obtained by setting the test frequency at 7000 CPS and bending the brackets holding L_1 and L_6 for minimum output. Tests with an oscilloscope revealed that the minimum was really a null at 7000 CPS and that the measured output 85 db below the reference level was hum and noise. Beyond 7000 CPS the output rose to about 70 db below reference level and dropped slowly above 10,000 CPS. The insertion loss of this filter is 7 db; that is, the output voltage at 100 CPS is 7 db less than the input voltage. This loss is a consequence mainly of the resistance of the choke coils used.

APPLICATION

The maximum operating level for the filter is 10 volts RMS at the input. Operation at higher levels will introduce distortion due to overloading of the input triode. Practical operating levels will range between 1 and 10 volts. Operation at lower levels will, of course, degrade the signal-to-hum ratio. It will be observed that the hum level in the output is determined by the amount of stray magnetic field in the vicinity of the filter since the coils are not magnetically shielded. A power supply is not included as part of the filter for this reason. Ordinarily, the small amount of heater and plate power required can be borrowed from other apparatus with which the unit is used. If excessive hum is experienced, try moving the filter to a more favorable position, or orienting it for minimum hum pickup.

As a receiving accessory, the filter is inserted in an audio circuit where the operating levels are within range. In most receivers, the output of the first audio stage will provide a suitable signal level for the filter input. When used with the Signal Slicer (G-E HAM NEWS, Volume 6, No. 4) the filter should be inserted between the slicer output and its succeeding audio amplifier. Note that the 4700-ohm output resistor should not be short-circuited by the device into which the filter operates. A coupling capacitor with reactance equal to one-tenth the input impedance of the load at the lowest desired frequency should be provided at the input to any such load (see Fig. 1). Such a capacitor can be incorporated as part of the filter unit to avoid mistakes.

Whether the crystal filter in the receiver is used or not, this filter will improve CW reception somewhat even though the bandwidth is greater than needed for that application. The improvement obtained will depend on the characteristics of the receiver and the particular QRM problem encountered.

For use as a bandwidth control in transmission, the filter is inserted in the audio circuits at a point where the operating levels are suitable. The above precautions regarding the load circuit should be observed. When used in conjunction with the SSB Jr. exciter (G-E HAM NEWS, Volume 5, No. 6) the filter output can connect directly to the audio input jack of the exciter if an 0.01 mfd coupling condenser is inserted in either the filter output or exciter input.

The filter characteristics do not provide for attenuation of low frequencies. Where it is desired to tailor the audio response of the transmitter, this may be done in the circuits either preceding or following the filter. When low-frequency attenuation is introduced after the filter, hum pickup in the filter itself will be attenuated. (See G-E HAM NEWS, Volume 4, No. 4, for simple means of introducing low-frequency attenuation in speech amplifier circuits.)

The "dyed-in-the-wool" experimenter will find many other applications for a handy sharp cut-off filter such as the one described here. Even though the filter is normally used in only one place (say as part of the receiver setup) it will be found convenient to provide input and output jacks so that the device may be patched into other apparatus as the need occurs. In this way a single filter can be made to serve a variety of uses.

THUMBNAIL THEORY

The design of filters can not be covered very thoroughly in a few paragraphs. For those who want some background information on filters the following will be of interest.

The basic filter section used in the device described in this issue is called the "constant K prototype," shown in Fig. 7. Any number of these sections may be joined together for greater attenuation beyond the cut-off frequency. When this is done, the internal sections can be considered as either π or T sections. A multiple section filter is called a "composite" filter. In the ideal case, a constant K filter must be driven by a source having an internal impedance equal to the characteristic impedance of the filter section and

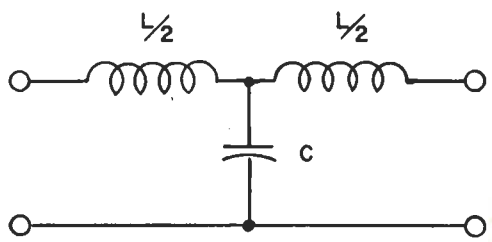

Fig. 7 Above is a T structure filter section. When several T's or π's are joined in a complete filter, the internal sections lose their identity.

Fig. 8 Below is a π structure filter section.

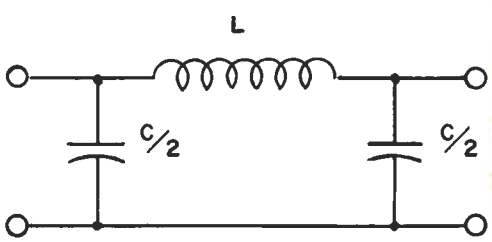

the filter must be terminated by the same impedance. Ideally, too, the filter elements should be perfect reactances. Practically speaking, the characteristic impedance varies throughout the pass-band of the filter. Of course, the filter elements do have loss (they are not perfect reactances) so that other considerations

(continued on page 8)

THUMBNAIL THEORY (continued from page 6)

enter into the design of filters. Even when perfect filter elements are assumed, the variation of characteristic impedance within the pass-band presents a problem that is solved partially by more complex circuit arrangements known as "M-derived" filters.

In filter design, as in most things, a compromise must be made between performance and complexity, or cost. In our case, certain liberties were taken with classical filter theory to provide acceptably good performance with basically straightforward and simple circuits. A low source impedance is provided by the cathode follower input arrangement shown in the schematic diagram, while the terminating impedance is a resistor of a constant value. These departures cause minor variations of the attenuation within the pass-band. Fortunately, these variations are partially smoothed out by the loss in the filter coils and the approach to ideal operation is thereby improved. Non-ideal filter elements can be used with considerable saving in cost and a less complex filter arrangement can be built. The loss in the coils accounts for the bulk of the "insertion loss" mentioned earlier. About 2 db of the insertion loss is accounted for by the two tube sections used.

The composite filter in this article comprises three identical T sections joined together. Since a low driving impedance is used, no advantage could be achieved by a π structure. Rather than select a certain characteristic impedance and then prune commercial coils to necessary values in order to provide the desired cut-off frequency, the design equation for inductance *per section* was solved for R_0, the low-frequency characteristic impedance. Thus:

(1) $R_0 = \pi fcL$, where fc is the cut-off frequency and L is twice the inductance value obtainable. When fc = 3000 CPS, then L = 0.25 henry.

(2) $R_0 = \pi \times 3000 \times 0.25 = 2360$ ohms. Keeping fc at 3000 CPS, and using $R_0 = 2360$ ohms

(3) $C = \frac{1}{\pi fcR_0} = \frac{1}{\pi \times 3000 \times 2360} = 0.000000045$ farads.

Thus C = 0.045 microfarads.

Equations (1) and (3) can be used in designing low-pass filter sections for other cut-off frequencies if desired. A filter is said to "cut-off" when its attenuation reaches 3 db.

The coils used in the sample filter had an inductance value of 0.125 henry each. The measured Q at 1000 CPS was 2.20. The total value of 0.25 henry required per section is twice the value of the individual coils obtainable. The filter capacitors were made up of two selected commercial plastic-encased paper capacitors connected in parallel to provide the calculated value of 0.045 ufd. The individual capacitors were checked for value and paired for as nearly matched composite values as possible, as well as adherence to the design value required.

The sharpness of cut-off obtained with this filter is greater than that indicated by classical filter theory when constant resistive source and load impedances of the value R_0 are used. This greater attenuation is paid for by the irregularities shown between 1000 and 2500 CPS, a really small price indeed. The additional attenuation obtained beyond the 40 db point by coupling between L_1 and L_6 to provide "infinite" attenuation at 7000 CPS serves to increase the slope of the characteristic between 4000 and 7000 CPS at the expense of smaller attenuation beyond about 10,000 CPS. Although this actual difference is measurable, its practical significance for most applications is very small.

—W2KUJ

Electronic TUBES

G-E HAM NEWS

Available FREE from

G-E Electronic Tube Distributors

published bi-monthly by

TUBE DEPARTMENT

GENERAL ELECTRIC

Schenectady 5, N. Y.

In Canada
Canadian General Electric Co., Ltd.
Toronto, Ontario

E. A. NEAL, W2JZK—EDITOR

Printed in U.S.A.

VOL. 10—NO. 2

MARCH-APRIL, 1955

Des Roberts
ELECTRICAL SUPPLY CO.
24-60 MT. VERNON ST., LYNN, MASS.

EAM, ENHANCED AMPLITUDE MODULATION, EAM

Part I - What is it? Why do I want it? How much is it going to cost me?

by W2WLR, George A. H. Bonadio, 373 East Avenue, Watertown, New York 13601

Fig.1

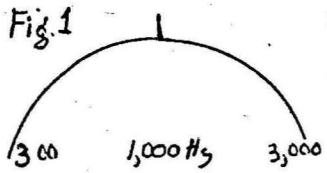

Fig.2

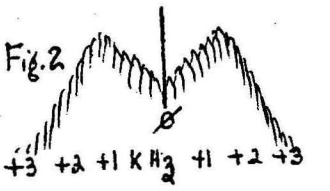

Fig.3

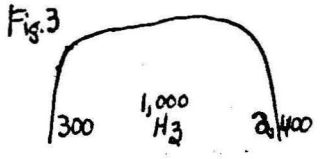

Fig.4

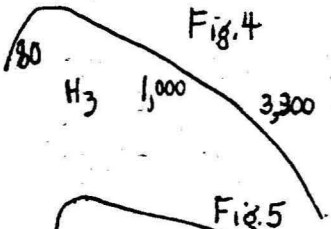

Fig.5

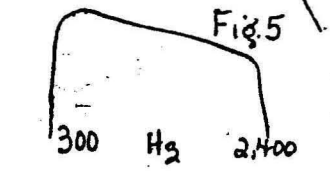

Fig.6

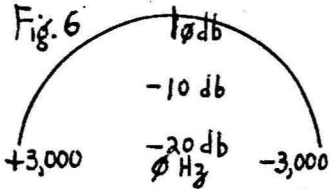

Fig.7

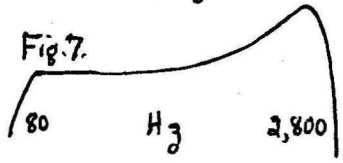

Fig.8

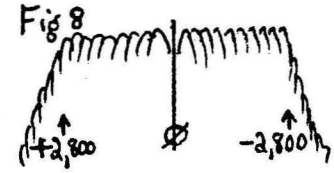

Fig.9

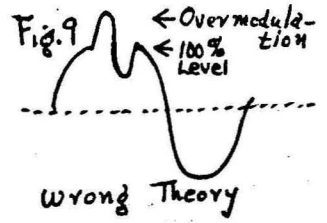

By using the new knowledge of what modulation is and applying it to voice radio, we can have the most readable signals on the air. We used to think that an audio peaked near 1,000 Hz, Fig.1, was best. Most AM rigs, now, feature it. It gives sidebands as in Fig.2, as seen on my Scanalyzer.

However, SSB came in with an audio curve like Fig.3. With the human voice output curve of Fig.4, SSB results in Fig.5. The SSB filters chop off near 300 and 2,400 Hz, because of costs, not because of desirability.

The EAM, Enhanced Amplitude Modulation, receiver is open for any AM as its acceptace is shown in Fig.6. If Fig.4, the drop off of the voice energy with the higher pitched tones, is inverted, as in Fig.7, It reults in sidebands around the carrier as in Fig.8, unlike Fig.2, both Scanalyzer views.

When Fig.8, an EAM transmission, is received by the receiver of Fig.6, the resultant audio is similar to Fig.4, except for a cut off above 2,800 Hz. The differences between Fig.2 and Fig.8 is the Enhancement, which does perform.

The benefits are several. From my personal observations:

(1) SSB's do not crowd into the ± 3 kHz around my Fig.8 carrier as they do 1½ kHz closer to the carrier of Fig.2.
(2) Net operators ask me to make a transmission to clear off the SSB QRM.
(3) I log, frequently, reports including the words: "beautiful", "armchair copy", " in the room", "right here with me", "every word", "100 %", "taking everything out on the frequency when you talk", etc.
(4) In real heavy QRM, "The QRM is fierce but I am still able to read you", "your modulation comes through all the junk on the channel", "you are readable in all that mess".
(5) On band fadeouts, "Even when the S Meter doesn't move above zero I can still read that modulation", "yours is the first modulation to do this".
(6) The same rig, voltages and tubes are used. Only, by formula, a few condensers, a very few resistors are changed. No butchering. Costs for receiver and transmitter Enhancement is from $10 to $25.
(7) I don't have to use phonetics to get across like I used to through the Queen Roger Mary. I do not get request for repeats that used to be common.

Don "Holy" Holmgton
Amateur Radio W 4 CJL
202 Baker Drive
Florence, Ala. 35630

What is going on ? It used to be thought that treble audio waveforms had to climb on top of base audio waveforms, as in Fig.9. Actually, we scan our tones, from lowest upwards to the highest, about 125 times per second, as in Fig.10. Surprisingly enough, at first learning, the frequencies of our voices are not the pitch. The pitch is the rate of scanning. A girl will use the same tones as a man, but she will scan maybe 260 times per second.

As Fig.10 shows us frequencies from 80 Hz to 3,3000 Hz, it does not represent the energy of AM shown in Fig.2 nor of SSB of Fig.5. With SSB cutting off energy below 300 Hz and above 2,4000 Hz the start of the scan is omitted and the end is omitted, leaving time holes in the delivery of intelligence, as in Fig.11. Hence, SSB uses about 50 % of the time to carry intelligence while the noises continue 100 % of the time. Meanwhile, EAM uses about 90 % of the time to carry intelligence. Thus, were we to compare an SSB of 100 watts PEP with an EAM which has an equal PEP in one of its sidebands, we would find a difference of 80 % more watt-hours in the EAM sideband. This is at the same peak percentages of modulation.

For Example: Let us compare a KW of EAM with a 2 KW PEP of SSB. The EAM operates at 1,000 watts d.c. and produces, @ 75 % efficiency, 750 watts of carrier, which has peaks of 750 watts of sidebands to null or double it. This 750 watts of EAM @ 90 % scan time leaves about 675 watt-hours of intelligence. Meanwhile the SSB peaks 2 KW, @ 60 % efficiency, a 1,200 watt sideband. This 1,200 watt sideband @ 50 % of scan time, leaves about 600 watt-hours of intelligence. By similar calculations, the AM of Fig.2 will result in about in a poor showing of about 375 watt-hours, more or less, depending on how poor is its modulation spectrum and distortion free characteristics.

Not only is the sideband energy improved about two to one, but the real "loudness" of the modulation is up about 2 db. The noise polution studies show that voice frequencies that are narrowed down, like in SSB, have to have more wattage to sound as loud as wider spectrum. The difference between SSB and EAM loudness is about 2 db. This is why an EAM station sticks out louder on tuning the band than other AM stations. However, if the receiver is narrow, like old AM receivers, or the SSB systems, the difference is hardly noticable. EAM is also an advantage in the receiver.

Compared with SSB's poor spectrum occupancy of Fig.11, EAM is there most of the time, as in Fig.12. Notice that the higher audio freqencies of Fig. 12 have beeen built up at the same rate that they normally fall off, as in Fig.4, and corrected with the slope of Fig.7. That is why a hi-fi AM station will not do so well as EAM, the hi-fi looking like Fig.10 compared to Fig.12 for EAM.

Enhanced Amplitude Modulation packs in the most possible modulation that can be carried in this bandwidth, as shown in Fig.8 and Fig.12. There is not any room left to put modulation in. This is as far as we can go.

The next installment will show you the simple formulas and where they go.

Copyrighted 1970, by George A. H. Bonadio, Watertown, N.Y.

Fig.10

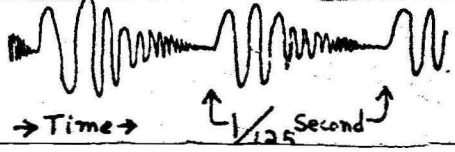

Fig.11

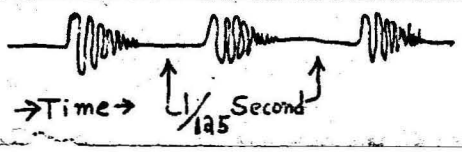

Fig.12

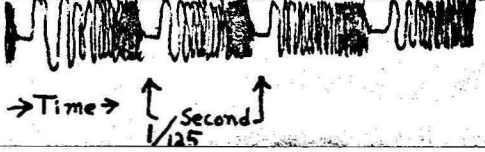

Distortion, Causes and Reduction

This section contains articles discussing the types of distortion found in amplitude modulation systems.

Most common or annoying distortion problems are amplitude distortion (clipping), frequency distortion (inconsistent frequency response), and phase distortion (phase shift dependent on frequency).

The modulator is like any other audio amplifier and therefore the same techniques can be applied to it that are applied to home audio circuits. Within limitations imposed by the components used, the usual techniques work well.

The only places distortion should be allowed in a speech system is where they are intentional, such as in the equalizer, compressor, limiter, and clipper.

At least one article addresses the fact that the natural speech waveform is usually not symmetrical and that the phase of the modulator signal can be inverted (flipped 180 degrees) so that the highest peaks always point positive and do not drive the transmitter to -100% modulation before 100% positive modulation is reached.

One word of caution to experimenters is against careless application of a lot of feedback around circuits incorporating too many transformer coupled stages or other circuits with large phase shifts (for example: around a stage that includes an LC/bandpass filter or equalizer -don't do that).

If there is excessive phase shift over the frequency range, the degrees of negative feedback add up and can become neutral (having no effect) or even positive (causing a howl). There is no harm in applying feedback around one stage at a time when a difficult case is encountered.

This may occasionally be the case with the modulation transformer having much phase shift at frequency extremes. One help is to take the feedback from the appropriate modulator tube plate rather than from the outout terminal of the modulation transformer.

In contrast to the relatively narrow band of voice frequencies (300-3500 cycles) passed through a stage, a good quality stage has a much wider response. It is not good practice to limit the bandpass of all these stages to just the desired voice range by use of restrictive component values because that introduces even more overall phase shift. This statement applies more to circuits having numerous audio stages encompassed by feedback than to those having but a few and using simple feedback arrangements as shown in the articles.

Distortion and feedback beyond relatively simple but effective examples is a complex topic that is much too detailed to be treated properly here. A very good good reference on distortion is "Understanding Hi-Fi Circuits", 1957, by Norman H. Crowhurst, available as a very popular reprint.

Some will complain that the receiver had a few percent distortion, and so does the speaker. However, there is no point in putting distorted signals into the RF spectrum. The guy with the reciever won't notice much, but someone trying to use a frequency a few KC away from the intended edge of your bandwidth may be annoyed by the artifacts coming from your transmitter.

Why Not Use Your Distortion?

BEN A. PENNERS, W7HLV

If you must have distortion here's a trick method which increases modulator power while giving a cleaner signal.

When compared to a sine wave, the male voice is found to contain a certain percentage of even order harmonics. This is because the male vocal equipment finds it easier to compress air than to rarefy it. Obviously male voices may vary from person to person and there is no way to tell what yours may be. Addition of second, and other even order harmonics gives rise to a wave form like that of *Figs. 1* and *2*. These figures show the wave to have a greater amplitude in one direction than another. If the speech amplifier is linear, this wave form will be preserved, and the modulating wave will have the same shape, although it may be inverted in the process of amplification.

When a class A voltage amplifier handles a large signal it is very apt to be driven so that it causes second harmonic distortion. Phase inverters also cause second harmonic distortion, and although the author does not propose that distortion be added, there is a direct benefit to be gained by phasing your distortion.

When an r-f carrier is amplitude modulated, the audio voltage, called (E_m), is impressed on the d-c voltage, called (E_b), which is supplied to the r-f amplifier plate circuit. The absolute value of (E_b) will vary during the modulation cycle from values of $(E_b) + (+E_m)$ on the positive peak to $(E_b)-(E_m)$ on the negative peak. If the modulating voltage is sinusoidal the exact value of $(-E_m)$ and $(+E_m)$ will be equal. When $(+E_m$ equals (E_b) the plate voltage will be doubled, and when $(-E_m)$ equals (E_b) the plate voltage will

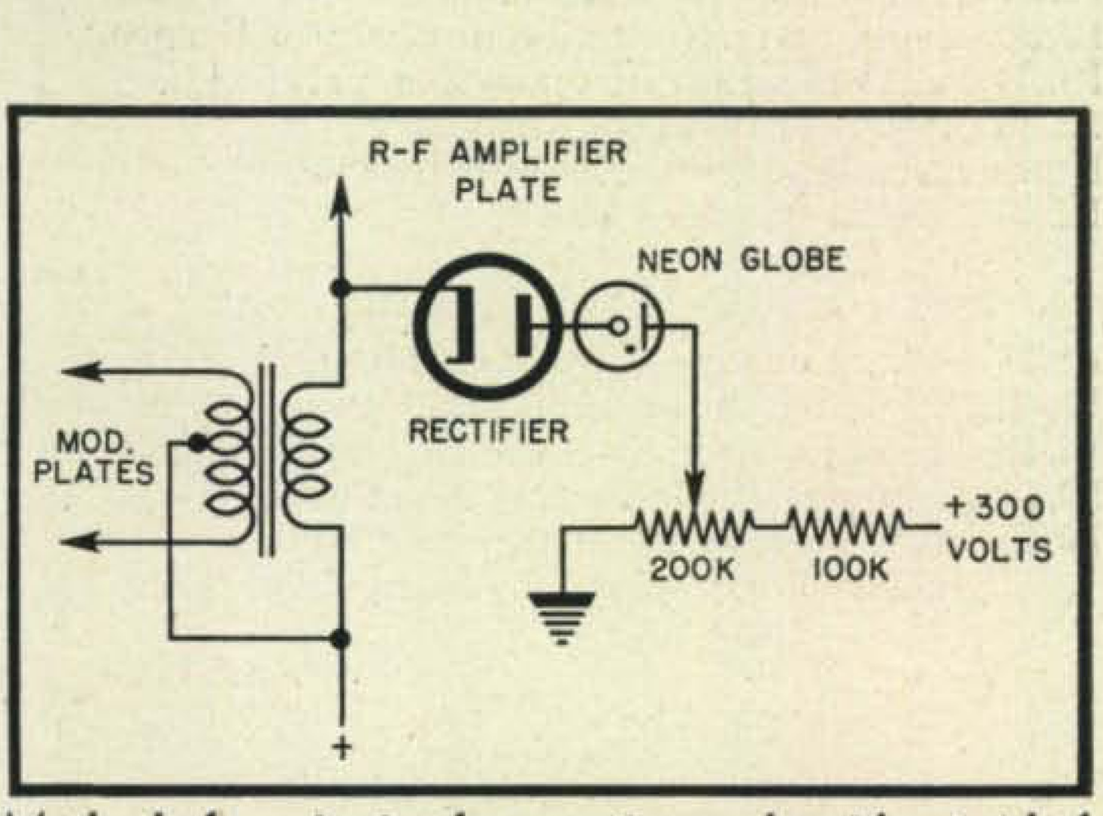

Method of monitoring for negative peaks without aid of oscilloscope

be zero. This is the condition for 100% modulation with sine wave modulation. If the modulating wave has the shape of *Fig. 2*, and $(+E_m)$ equals (E_b) the value of $(-E_m)$ will exceed (E_b) with the result as shown in *Fig. 3*, in this case the carrier will be cut off from *A* to *B*, and there will be splattering from the carrier cutoff. If, however, the wave form is turned over the highest peak will be extended in the positive direction, and the resultant side band distortion will be greatly decreased. From this it is seen that $(-E_m)$ must not exceed (E_b) if you expect to live at peace with your fellow hams.

The speech amplifier and modulators at W7HLV/6 have been checked and rearranged to take advantage of all the unavoidable distortion, the effect has been to give an average in-

[*Continued on page 62*]

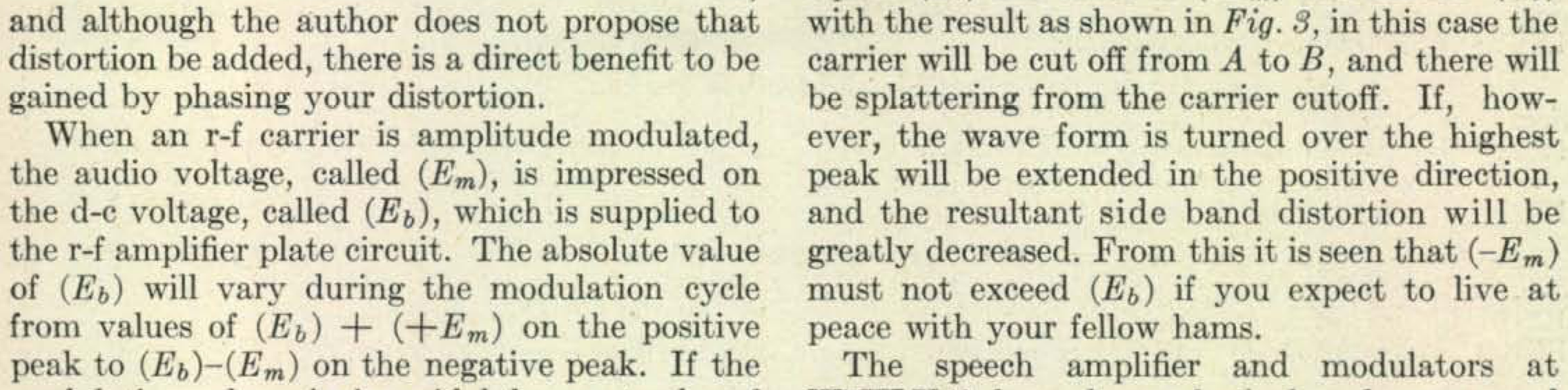

Addition of second and other even order harmonics will result in wave form as illustrated in *Figs. 1* and *2*. Condition of splatter *Fig. 3*, is fully explained in text

Address Changes—

Subscribers to CQ should notify our Circulation Dep't. at least 3 weeks in advance regarding any change in address. The Post Office Dep't. does not forward magazines sent to a wrong address unless you pay additional postage. We cannot duplicate copies of CQ sent to your old address.

CQ Circulation Dep't.
RADIO MAGAZINES, INC.
342 Madison Ave., New York 17, NY.

CLASSIFIED ADS

Advertising in this section must pertain to amateur or experimentation radio activities. Rate—20c. per word per insertion. Remittance in full must accompany copy. No agency or term or cash discounts allowed. No display or special typographical ad setups allowed. "CQ" does not guarantee any product or service advertised in the Classified Section.

FREQUENCY METERS (New): 48-62 cycles, for use on 110v line. Flush Mount 3", match Weston 301—Special $2.95.

BC 406 RECEIVERS: Selected government surplus 205 MC 15 tube receivers, 110 v. AC, built-in power supply. Easily converted for 2 to 10 meter, FM or television bands. Conversion instructions supplied. Special—Complete (with tubes) plus two spare 954 Acorns $30.

COAXIAL CABLE: RG-59/U: 72 Ohm, quarter inch, weatherproofed polyethylene insulation—8c/ft. Minimum order 50 ft.

RG-8/U: 50 Ohm, 3/8 inch, weatherproofed-9c/ft.

Write for list of low-priced new meters and other specials—Westchester Electronic Products, 29 Milburn Street, P.O. Box No. 231, Bronxville, New York.

"SUPERHET Manual", $2.50 Free electronics bookalog! Stone, Lunenburg 20, Mass..

CRYSTALS: Precision low drift x-ray oriented units manufactured by latest and most scientific methods. Optional holder mounting type 400A for five prong socket or type 100A two of which plug in a single octal socket. Your specified frequency.

3500 KC to 4000 KC.....$2.60
6250 KC to 7425 KC.....$2.60
12500 KC to 14850 KC.....$3.30

Rex Bassett, Incorporated, Fort Lauderdale, Florida.

Rotobeams. Bandspread RME-45's. Conklin Radio, Bethesda, Maryland.

Coaxial Cable RG8/U, RG11/U, RG13/U, and RG59/U available 50 feet to 1,000,000 feet at ridiculously low prices, see QST April page 51 for detailed description. 5" oscilloscopes BC-412 complete $40.00, Thordarson T19C44 chokes, 12H, 400 ma. $6.50, National HRO Receivers complete with coils $110.00. Coaxial Cable Co., Box 19, Woodside, N. Y.

Radio Tubes, Parts, Condensers. Free bargain lists. Potter, 1314 McGee, Kansas City 6, Mo.

QSL CARDS, in colors. Samples free. Glenn Print, (W3FSW), 1042 Pine Heights Ave., Baltimore, 29, Md.

Sec. 12.161 Damage to apparatus.—No licensed radio operator shall willfully damage, or cause or permit to be damaged, any radio apparatus or installation in any licensed radio station.

Sec. 12.162 Fraudulent licenses.—No licensed radio operator or other person shall obtain or attempt to obtain, or assist another to obtain or attempt to obtain, an operator license by fraudulent means.

[*Appendix will appear in July CQ*]

DISTORTION

[*from page 17*]

crease in modulation of about 6 db over what it was with all the stages out of phase.

The easiest way to check the system is by use of an oscilloscope. If an oscilloscope is not available, the circuit of *Fig. 4* can be used. To set up the circuit of *Fig. 4*, the voltage is removed from the modulation transformer and the cathode of the rectifier grounded. With voltage applied to the potentiometer, the potentiometer is set so the neon globe barely lights. The ground is removed from the cathode and the voltage reapplied to the modulation transformer. When a negative peak causes the plate voltage to drop to zero the neon globe will flash, so this provides a means of monitoring negative peaks.

In checking the system to take advantage of your distortion, a dummy load should be put on the transmitter, and the indicating device watched for occurrence of negative peaks, if an oscilloscope is used it is possible to observe the positive peaks at the same time and it may be seen that they are down in amplitude from the negative peaks. If a phase inverter is used in the speech equipment, the first check will be to phase it. This is done by whistling a pure note, or using an audio oscillator, and measuring the relative peaks with sine wave input. The connection to the modulator plates or the r-f connections may be reversed to extend the positive peaks. With the phase inverter phased, the microphone and first speech stage should be checked by reversing the polarity of the microphone. If the microphone is built so that the leads cannot be reversed, it is suggested that the output of the first speech stage be used to drive the other side of the phase inverter. If this is done, the modulator output connections will need to be reversed again to keep the phase right.

In all it should take very little time to phase all the second harmonic distortion present so that it may be least objectionable. It gave the author a pleasant thrill to be complimented by several DX stations on the clearness and crispness of quality while the carrier was well modulated, and to know that at the same time the fellow just down the street was copying DX on an adjacent channel, without hearing any side band splatter. If you have distortion at least let it work for you.

The Overmodulation Racket

A Plea for Restoration of the Wasted Kilocycles

By James J. Lamb, Technical Editor

I BELIEVE that I can qualify as an old-timer in amateur 'phone operation. The beginning was an introduction by Dr. A. H. Taylor at old 9XN–9YN, University of North Dakota, back before the war, when modulation of his long-wave arc transmitter was just so much Einstein to a knee-trousered ham from a nearby small town. Through loop modulation in '21, the workings of a Heising in '22, the achievement of a real double-button mike in '23, "like broadcast quality" in '26, 100 percent with crystal-control in '29, Class-B modulation in '31—yes, I'm probably eligible as an old-timer. And, as such, I cannot help but have genuine interest in amateur 'phone; an interest that makes me want to have 'phone as good as it can be, not only so that I can get the maximum of enjoyment from it for myself in the limited operating periods available to me but, perhaps even more, so that I can feel satisfaction in knowing that amateur 'phone as such is making full use of the technical developments it has available and of the practical information concerning them which consistently has been presented first in *QST*.

There is no denying that all is not aces with amateur 'phone today. It's too crowded. We all know the pat panacea that is most often proposed as the measure of relief. But above the not altogether harmonious chorus for more kilocycles, chanted as the solution of existing congestion, we hear arising an occasional voice not quite so certain that further frequency assignments hold the only answer; nay, even venturing the suggestion that most of the crowding and jamming may, possibly, be the result of something haywire with the 'phones themselves and not with the width of the bands. And these occasional voices are right. There is every justification for complaint against the wholesale and needless slaughter of perfectly good kilocycles that goes on day and night, in which crime the vast majority of 'phone's citizenry are not only the hapless victims but are, at the same time, the cheerful perpetrators. It's a kind of suicide. Its name, broadly speaking, is overmodulation.

Now it cannot be said that warning against this particular crime has not been given, both in *QST* and in the *Handbook*. It has been stated repeatedly that overmodulation generates spurious side bands and, hence, causes serious interference; that modulation must be symmetrical; that there must be no carrier shift; that there should be no variation in the Class-C amplifier plate current—all of which, despite the superior ability we assume to characterize 'phone operation, seems to have gone in one eye and out the other. Perhaps these statements should have been run in Gargantuan red letters, not simply given as straightforward technical suggestions with the assumption that their face-value importance was sufficient to make them register. If the evidence has any meaning at all, those for whom the information was intended seem, almost unanimously, to be suggestion-proof. Over 90 percent of the 'phones are over-modulating anywhere between 50 and several hundred percent and, in consequence, are taking up as much as 10 times more space per 'phone than there is any sane reason for their occupying. It can be said, without violating conservatism, that at this time overmodulation alone reduces the effective width of the 3900-kc. 'phone band to less than half of what it could and should be with proper modulation in every transmitter.

Now this is not high-flung theory evolved from abstract mathematics and put forth for academic argument. It is woefully real. The spurious frequencies resulting from improper modulation actually exist, and exist to an extent and with an importance far beyond what theoretical speculation would lead us to suspect. Here are a few bits of actual evidence, based on unbiased measurement, that happen to be at hand:

Exhibit A: Of 13 'phones checked in the A.R.R.L. laboratory during a single noon-hour period, using a superhet receiver with a linear second detector, *12 were overmodulated from 50 to 200 percent*, as indicated by increase in average plate current of the detector. The one properly modulated 'phone, which caused no variation in the detector plate current, not only had the highest quality but also effectively occupied a band of but 4 kilocycles on the s.s. receiver. The 12 overmodulated 'phones had harmonic distortion ranging from noticeable to terrible and occupied from 6 to 50 kilocycles apiece on the same receiver, being worse on both counts in proportion to the extent of their overmodulation. One, the worst, was so badly distorted as to be practically unintelligible. Summary: Bad and improperly operated 'phones, 92.3%; good and intelligently operated 'phones, 7.7%.

Exhibit B: Quoting from a report received from W. H. M. Watson, W5NT, who, with W5AOT, has checked a number of 'phones with equipment including a cathode-ray oscillograph, and indi-

cating and recording volume-level indicators:

"So far we have found 1% of the stations on 75-meter 'phone modulating up to 100%, none modulating less than 100% *and 99% modulating over 100%*. On 20 meters the average 'phone is modulated close to 200%, while on 75 meters the average 'phone is modulated close to 250%. These figures may seem high but that's how they turn out. We actually logged a W6 the other night who was modulating 375% on phonograph records and so much more on voice that we were unable to take readings. We also find, by their indications, that on 20 meters less than 1% of the transmitters have r.f. in the audio systems while on 75 meters about 15% have r.f. in them.

"As for ourselves (W5NT and W5AOT), we find that when modulating up to exactly 90% we cause one another no interference, while 100% modulation causes a very slight amount of interference. We are located 2 miles apart. We also found that we were modulating somewhere in the neighborhood of 200% on an average (with severe interference) before making corrections."

* * *

What's to be done about it? Technically, the cure lies in really simple things. In the first place, *let no 'phone be operated with the slightest variation in average plate current to any stage handling modulated r.f.* Watch the plate milliammeter of the modulated amplifier stage. It's the most important meter in the 'phone transmitter. Never mind what the antenna current meters are doing; and do not rely on the much-touted current-squared galvanometer. These meters are heat-operated r.m.s. gadgets, are too sluggish for use as operating indicators. They indicate 100% modulation, by the 22-odd percent current increase, *only when the modulating signal is purely sinusoidal and is of sufficient duration to give steady-state conditions.* But we do not voice sine waves, nor do we talk at a fixed output level. Speech is a conglomeration of transients. It is neither pure in frequency composition nor anything like constant in amplitude. It's the transient peaks in speech that we have to worry about.

The maximum modulation *capability* of the transmitter, which is the thing meant when the label "100-percent modulation" is attached, must be reserved for use only on these peaks. The idea that a transmitter should be run at full 100-percent modulation with *average* speech level is as ridiculous as would be the idea that a 120-horse-power motor car should be run always with the motor developing its full rated output—which would certainly land its operator either in the morgue or in the lock-up. But that is just the kind of thing 'phone operators do when they keep the audio input jacked up to the point where an r.f. meter "hits a hunnert percent" on *average* speech. Full 100% modulation should occur only on the occasional peaks, which endure but a fraction of a second. Sluggish r.f. meters cannot show them. As a matter of plain fact, the r.f. current meters should barely show variation with normal speech modulation. Watch the r.f. meters in any good b.c. station.

D.c. meters measuring *average* current value really show something—by not showing anything. That is, the *average* values concerned should be absolutely constant. It goes like this: When a wave is properly modulated its average amplitude is constant. The average amplitude should be unchanging between zero and 100% modulation. With constant d.c. plate supply voltage the average amplitude of the radiated wave is directly proportional to the average current input to the plate of the modulated stage. The plate d.c. milliammeter indicates the average value of the plate current. Therefore, there should be no variation in the current indicated by this meter: *Q.E.D.*

The constant average requirement applies equally to the plate current of Class-B linear r.f. stages following the modulated stage. It also applies equally with all systems of modulation—grid-bias, Class-A plate, Class-B plate—or what have you. Any system for normal modulation that will not permit constant average input (and output) is not permissible. Like Joe Cook's corn flakes without milk, it's just no good. It is in failing to meet this constant average requirement that various trick systems fall down, among them being absorption (loop) modulation, plate modulation with only audio power and without the necessary steady d.c., non-linear grid-bias (grid-leak) modulation, and so on.

Of course the rightness or wrongness of a modulation system is not all in its type and the kind of circuit diagram used to hook it up. It must have properly coördinated tubes, the right audio coupling devices, proper voltages here and there, and, above all, *intelligent adjustment.* Transmitters sponsored by *QST* are of sound and tried

(Continued on page 72)

. . . "It can be said, without violating conservatism, that at this time overmodulation alone reduces the effective width of the 3900-kc. 'phone band to less than half of what it could and should be with proper modulation in every transmitter" . . .

* * *

. . . "Let no 'phone be operated with the slightest variation in average plate current to any stage handling modulated r.f. Watch the plate milliammeter of the modulated amplifier stage. It's the most important meter in the transmitter" . . .

* * *

. . . "The rightness or wrongness of a modulation system is not all in its type and in the kind of circuit diagram used to hook it up. It must have properly coördinated tubes, the right audio coupling devices, proper voltages here and there, and, above all, intelligent adjustment" . . .

RAYTHEON
TRADE MARK

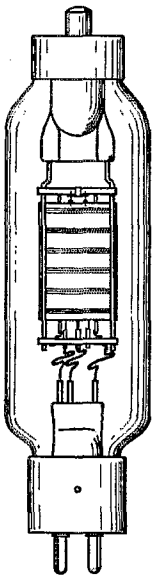

RK-18

Low capacitances for good 5-meter operation — yet low impedance and high mutual conductance for high output at any frequency

The RK-18 is designed to meet every requirement of the amateur from a 5-meter self excited oscillator to a high power Class B modulator. A molybdenum plate tells when proper plate dissipation is reached. Isolantite insulation insures against dielectric loss. Grid and plate leads are positioned for convenience and efficiency in the transmitter assembly.

RATING

	Class A	Class B	Class C
Filament Voltage	7.5		
Filament Amperes	2.5		
Maximum Plate Volts	1000	1000	1000
Grid Bias Volts	-40	-50	-150
Amplification Factor	18		
Mutual Conductance	3000		
Max. Watts Plate Dissipation	35	35	35
Nominal Watts Output Per Tube	8.5	40	40
Max. over-all Length	8½"		
Max. Diameter	2 1/16"		

List Price—$10.95

Write for Technical Data on the RK-18, RK-15, RK-16, RK-17 and R-866A.

If your dealer cannot supply you order direct from us

RAYTHEON PRODUCTION CORPORATION

General Sales Office — New York City

New York, N. Y. ..... *30 E. 42nd Street*
Newton, Mass. ..... *55 Chapel Street*
San Francisco, Cal. ..... *555 Howard Street*
Chicago, Ill. ..... *445 Lake Shore Drive*

use it for that purpose. The neutralizing condenser need not be touched; to get second-harmonic output all that it is necessary to do is to insert the proper plate coil, L_3, and to excite the grid on the next-lower-frequency band. Doubling is particularly likely to be advantageous when the amplifier is to be used on 28 mc., where the excitation available from the exciter unit is lowest and is critically dependent upon the amount of regeneration in the doubler stage. Should regeneration be low, it may be found that the 28-mc. output of the amplifier is greater when the excitation is on 14 mc. and the amplifier itself does the frequency multiplication. At any rate, for occasional 28-mc. operation this practice will obviate the necessity for the three or four extra coils required for straight-through 28-mc. excitation.

The Overmodulation Racket

(Continued from page 19)

design. The methods of adjustment that accompany their description will result in proper, symmetrical modulation. Actually these instructions vary but little in their essentials, from one transmitter to another. Neutralize r.f. circuits precisely, apply the right bias and plate voltages, insure proper excitation, adjust r.f. load so that the modulator will be loaded as it requires, keep all r.f. circuits tuned to resonance—*and never allow the gain control to get above the point where the indicator of the modulated stage's plate milliammeter begins to quiver.* No need to repeat the details here; we have them in 'phone transmitter articles in *QST*, in the 'phone chapter of the *Handbook* and, for review of the high spots, in the 'phone section of the *License Manual.*

Let's take this thing seriously. The business is a serious one. Let's call a halt to the crime wave afflicting amateur 'phone. The unbounded and needless slaughter of useful kilocycles, not by just a few overmodulation racketeers but by the vast majority of us, must be stopped. We have only ourselves to blame and only we, coöperating intelligently, can clear up the mess by operating our individual transmitters to give *proper* modulation. There's no other way of retrieving the wasted kilocycles. And until we reach the state of making the fullest possible good use of the 'phone territory already assigned we are in a poor position to ask for more.

An Efficient C.W. and 'Phone Transmitter Using the New Tubes and Circuits

(Continued from page 17)

ma. This is the maximum rated current for the Type 46 and should not be exceeded. The output from the 841 should be quite high — at least as much as from a Type 10 self-excited oscillator at the same voltage.

Erkentenis van het in *QST* gezien te hebben identifieert U en ondersteunt *QST*

Types of Distortion in 'Phone Transmitters

Amplitude, Frequency and Phase Varieties and Their Effects

By Durward J. Tucker,* W5VU

RADIO telephony depends upon the transmission of the signal or "intelligence" by means of a carrier. The signal may be impressed upon the carrier by phase, frequency or amplitude modulation. Since amplitude modulation is the only method in universal use at the present time, it alone will be considered in this article. With amplitude modulation decided upon, the next important step is to insure that the system shall be free from the other types of modulation that would give rise to distortion.

Naturally, if our object is to transmit intelligence, we are concerned that the intelligence be intelligent at the receiving end. At the same time, while we are applying the intelligence to our own carrier, we should see that it does not affect the intelligence of the carriers in the adjoining channels. It is important, not only from the standpoint of our own communication, but also from the standpoint of the fellows on the adjacent channels, that our transmitter be free of distortion.

The places where distortion may occur are many. It can originate in the microphone, in transformers, tubes, volume controls—in fact in almost any piece of apparatus in either the audio stages or radio-frequency stages. In view of the many places where distortion may appear, it might be well first to consider the basic kinds of distortion in order that it may be more easily traced and remedied. The types of distortion in their order of importance are amplitude or harmonic distortion, frequency distortion, and phase distortion.

AMPLITUDE DISTORTION

As has already been stated, amplitude distortion is the most serious type encountered in 'phone transmitters. One reason is that the distortion products are not always restricted to the frequency channel of our own signal but may severely handicap the signals of fellow amateurs on adjacent channels. Amplitude distortion is caused by the system introducing frequencies into the output which were not present at the input. These new frequencies are usually harmonics of the original signal frequency. The term amplitude distortion is applied to this type because the amplitude of the output is not proportional to the input amplitude; that is, input and output are not linearly related.

* Experimental Station W5XM, 5712½ Marquita Ave., Dallas, Tex.

Fig. 1 shows how the two side-band frequencies combine with the carrier frequency to give a modulation envelope whose amplitude varies in accordance with some modulating frequency. By inspecting this figure it is seen that the signal frequency (*e*) introduces two new radio frequencies which are the side-band frequencies. This is not what we mean by amplitude distortion, however, because the two side-band frequencies are proper and necessary in order that the original signal (*e*) may be present in the modulating envelope (*d*). The magnitude of each side band should never exceed one-half the amplitude of the carrier as this is the value for 100% modulation.

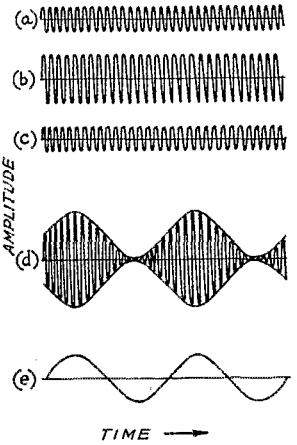

FIG. 1—PROPER 100% MODULATION

(a) Upper side-band wave whose frequency is equal to the carrier frequency (b) plus the signal frequency (e).
(b) Carrier wave.
(c) Lower side-band wave whose frequency is equal to the carrier frequency minus the signal frequency (e).
(d) Modulation envelope formed by the combination of the two side-band frequencies (a) and (c) with the carrier frequency (b).
(e) Signal or modulating frequency.

Fig. 2 shows the results of increasing the amplitude of the side-band frequencies to more than one-half the amplitude of the carrier frequency. It is seen that the modulation envelope is no longer an exact reproduction of the signal. This *is* amplitude distortion. The distortion is caused by overmodulation. If the side-band power, representing the power introduced by modulation, is increased very much beyond 50 percent of the carrier power, very serious distortion results. This rule holds true only when the carrier is being modulated by one single frequency; that is, by a pure sine-wave signal. If a signal having two or more frequencies is used to modulate the carrier, their respective amplitudes add up to give a wave which may have sharp peaks projecting up from the main

body of the wave. In some instances it may be necessary to restrict the side-band power to 20 or 30 percent of that of the carrier in order to keep the peaks from overmodulating. In rare cases it is possible, with certain phase relations, to increase the side-band power beyond the 50 percent value and still not overmodulate, as will be shown later in connection with our discussion of phase distortion.

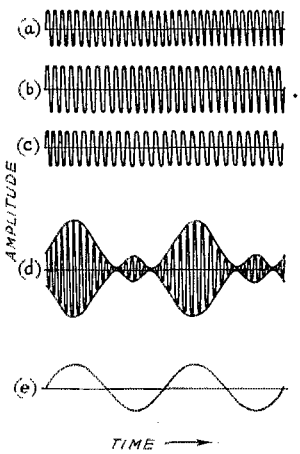

FIG. 2—AMPLITUDE DISTORTION FROM OVERMODULATION

(a) Upper side-band wave with an amplitude ¾ the carrier amplitude.
(b) Carrier wave.
(c) Lower side-band wave with an amplitude ¾ the carrier amplitude.
(d) Modulation envelope showing distortion introduced by overmodulation.
(e) Signal.

It must be kept in mind that amplitude distortion is not present merely because the observed wave is a complex wave. The point to determine is whether this complex wave is identical in every respect to the impressed wave. In the case examples given in connection with this discussion, the output wave is considered distorted because the phase relations, the component amplitudes, or the frequencies are not the same as in the input wave—but not simply because the output wave happens to be complex. The simplest types of waves are used in order that they may be more readily followed.

Fig. 3 shows the result of amplitude distortion introducing the third harmonic of the signal frequency into the audio system. It will be observed that in addition to the fundamental side bands we have a separate set of side bands for the introduced frequency. In fact, there is a separate set of side bands for every frequency that appears in our modulating signal. By comparing the modulation envelopes in Figs. 1 and 3 it can be seen that amplitude distortion severely distorts the wave. It should be further noted that should overmodulation also appear on the scene in Fig. 3, then the wave shape would become unintelligible indeed.

At this point it might be well to call the reader's attention to a fact which is of extreme importance to 'phone men. It has been shown that combinations of two or more frequencies may cause the modulation envelope to become more peaked. In actual practice the modulating frequencies will be many and the resultant wave will be very complex. At instants when the peaks of several of the frequencies are in phase, there will be a sudden rise in the wave amplitude. The modulating source must be restricted so that these peaks do not overmodulate. These narrow peaks cause 100% modulation even though the main body of the wave falls far short of the 100% value. Hence the average side-band power will be less than 50 percent of the carrier power and the required modulator power will be correspondingly less. For ordinary speech the average audio power required for 100% modulation should not exceed 25 or 30 percent of the carrier power. A modulator with an average audio output of 25 watts is sufficient to modulate a 50-watt carrier (100 watts input with 50% efficiency) provided the modulator is capable of supplying the additional power required on the instantaneous peaks.[1] For 100 percent modulation the *average* output power (carrier and side-bands) would be 62½ watts and the instantaneous power at peaks would be 200 watts.

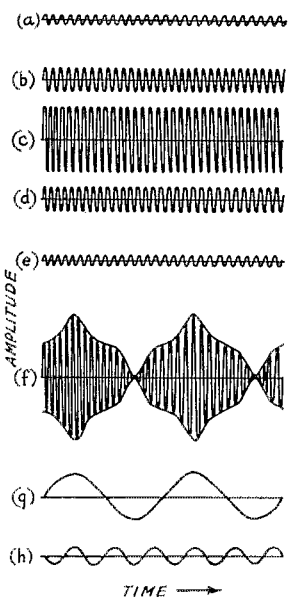

FIG. 3—AMPLITUDE DISTORTION IN MODULATING SIGNAL

(a) Upper side-band (third harmonic).
(b) Upper side-band (fundamental).
(c) Carrier wave.
(d) Lower side-band (fundamental).
(e) Lower side-band (third harmonic).
(f) Modulation envelope.
(g) Original modulating signal.
(h) 3rd harmonic of ⅓ signal amplitude and in phase with signal peak.

Amplitude distortion is detected by the ear by its disagreeable effect on the quality of music or speech that is being transmitted. It is more noticeable at low audio frequencies because the harmonics then fall within the audible band where the ear is most sensitive. Harmonics resulting from amplitude distortion at high audio frequencies are not as noticeable because they may fall near the upper limit or outside the limit of audibility. On the other hand, the side-bands resulting from harmonics of high audio frequencies may "hash up" the radio fre-

[1] "Greater Economy in Class-B Modulator Design for Speech," *QST*, August, 1935; Chapters Eleven and Twelve, 1936 A.R.R.L. *Handbook*.

quency band for several kilocycles on either side of the carrier frequency. Radiation of this type is called spurious radiation.

Amplitude distortion may be introduced into a system by passing the signal through any non-linear impedance. This means that the circuit parameters must be a constant; that is, the amplitude of the current must be proportional to the voltage if amplitude distortion is to be avoided. The most common causes of amplitude distortion are overmodulation and overloading the tubes in the audio stages (speech amplifier and modulator). Even under ideal operating conditions a small amount of distortion will be introduced, since the $E_g - I_p$ characteristic curve of any tube is not a perfectly straight line. Operating on the nearly-straight portion of this curve and working the tube into a high load impedance will minimize the distortion likely to occur in speech amplifiers. Over-biasing or overloading a tube so that the more defined curved portion of the characteristic is utilized increases the amplitude of the harmonics. For a voice frequency of 4000 cycles the third harmonic would be 12,000 cycles and, while of low relative amplitude, this harmonic would cause spurious side bands 12 kc. on either side of the carrier frequency which might cause severe interference to a weak transmission far outside the normal communication band of the defective transmission.

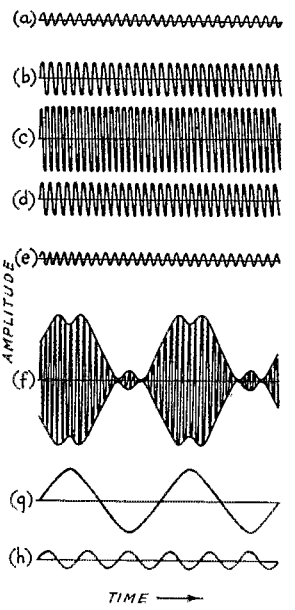

FIG. 4—SPECIAL CASE OF SIDE-BAND POWER GREATER THAN 50% WITHOUT OVER-MODULATION

(a) Upper side-band (third harmonic).
(b) Upper side-band (fundamental).
(c) Carrier.
(d) Lower side-band (fundamental).
(e) Lower side-band (third harmonic).
(f) Modulation envelope.
(g) Fundamental of modulating signal.
(h) Third harmonic of modulating signal out of phase with peaks of fundamental (g).

FREQUENCY DISTORTION

Another type of distortion is characterized by failure to reproduce all frequencies in the output with the same amplitude relation that existed between the frequencies in the input. This type is called frequency distortion because the system discriminates in amplification of the different frequencies present. Some frequencies might be amplified to a value twice the original amplitude while other frequencies might be amplified to three times the original amplitude. In fact, some frequencies might lose part of their amplitude or even be lost altogether. From the several references to amplitude it might appear that frequency distortion is some form of amplitude modulation. Actually no new frequencies are introduced but the relative amplitudes of the frequencies present are changed; therefore the name frequency distortion. As has been stated, amplitude distortion is the introduction of frequencies into the output that were not present in the input. With amplitude distortion the amplitudes of the original frequencies would be in the same proportion unless frequency distortion is also present.

Frequency distortion can usually be traced to the audio stages and results from the presence of inductance and capacity in the circuits. The impedance of a condenser or inductance is a function of frequency. Likewise, the current and voltage characteristics of either a condenser or an inductance are a function of the frequency.

Fortunately, frequency distortion does not of itself result in spurious side-band radiation, nor is it so readily detected by the ear. The relative power of any component may be reduced to as low as fifty percent of the other components before serious effects on fidelity are noticed. The typical frequency-response curve of amplifiers is probably well known to most readers. The more nearly this curve becomes a straight line, the less frequency distortion there is present. For amateur work we are interested only in the frequencies covered by speech. It is important that our speech equipment frequency-response curve be "flat" only within the essential frequency region of speech. If our audio circuits are designed to pass frequencies other than those needed for ordinary speech transmission, we are only inviting trouble. We let in a.c. hum in the lower frequency region (below 200 cycles) and broaden our channel unnecessarily and set the stage for spurious radiations by extending the response at the higher frequency region (above 3000 cycles).

PHASE DISTORTION

If the phase relations between the signal frequencies in the output are not the same as in the input, the system is introducing phase distortion. Phase distortion, like frequency distortion, results from the elements of capacity and inductance present in the circuits. The ear is unable to interpret phase shifts so it is only when phase shifts give rise to other effects, such as overmodulation, that it becomes important in amateur telephony.

(Continued on page 98)

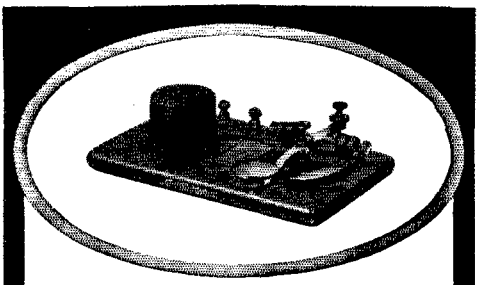

WIRELESS PRACTICE SETS

R–68 PRACTICE SET

Designed for those who want a well made instrument to learn the code. Set consists of a key and high frequency buzzer mounted on a mahogany finished wood base equipped with binding posts. The code is printed on a plate and fastened to the base between the key and buzzer. Buzzer is adjustable. List $3.40

SIGNAL's line of Wireless Keys, Telegraph Instruments and Wireless Practice Sets is complete. *Send for our bulletin.*

SIGNAL ELECTRIC MFG. CO.

Menominee, Michigan, U. S. A.

SIGNAL

MANUFACTURERS OF ELECTRICAL PRODUCTS

CONVERTIBLE NON-DIRECTIONAL MICROPHONE

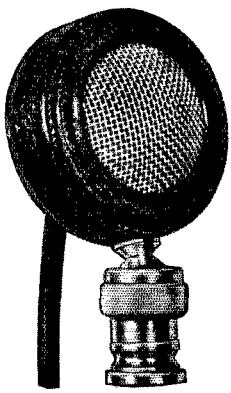

New 1936 literature describes the microphone shown and five other new Turner microphone developments. Ask your jobber or write us immediately.

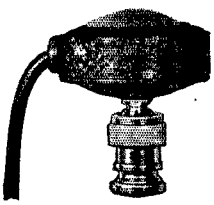

Model 38 for dual mountings as shown with 8' cable List $22.50

Licensed under patents of the Brush Development Company

THE TURNER COMPANY

Cedar Rapids, Iowa, U.S.A.

concrete suggestions on how to read and study your *QST* more intelligently. I very earnestly recommend that every serious experimenting amateur keep a technical notebook and attach even more importance to it than to the log book. If other amateurs have suggestions on the methods they have found effective along these lines, I suggest they send them in to *QST*.

Distortion in 'Phone Transmitters

(Continued from page 55)

In Fig. 4 the third harmonic is out of phase with the peak of the fundamental signal, in contrast to the third harmonic relation in Fig. 3. The modulation envelope peaks are reduced and subsequently broadened. This is a special case where the side-band power may exceed 50% of the carrier power without overmodulation.

If the phase relation were shifted by the system so that the third harmonic approached an "in phase" relation with the peaks of the signal frequency, we might have an example of amplitude distortion as a direct result of phase distortion. The carrier envelope peaks would no longer be broad as in Fig. 4, but would be narrow and peaked as in Fig. 3. Since no new frequencies were added and the amplitudes of the separate frequencies (fundamental and third harmonic) were not changed the effect would be unnoticed by the ear unless the amplitude increase of the complex wave resulting from the phase shift, were such as to cause overmodulation.

No definite amount of effective power loss, resulting from a certain percentage of distortion present, can be affixed. It is known, however, that distortion reduces the effective power of a 'phone transmitter very rapidly after a certain minimum value of distortion is reached. Occasionally an amateur 'phone station can be heard, especially in the lower frequency amateur 'phone bands whose "equivalent power" is so reduced, because of distortion, that a transmitter of one-fourth the power and free from distortion could out-distance and out-perform it. Our first aim should be towards maximum transmission of intelligence and power should be of secondary importance. The very definition of radiotelephony is that it is the transmission of intelligence. If we persist in "hashing" up our carrier with something that cannot be understood, then we have something else besides telephony.

Once distortion appears in a system, its removal becomes very complicated in most cases, so far as counteracting cures are concerned. It is usually more advisable to eliminate the cause of distortion rather than to try to compensate for the distortion afterwards.

The Simple Regenerative Receiver with Separate Beat Oscillator

(Continued from page 15)

its use after a few trials, and the local oscillator for c.w. reception went back into the textbooks

Note on Reduction of Distortion and Noise with Inverse Feedback

A FEW of our readers have disagreed with some of the conclusions reached, with respect to optimum inverse feedback conditions for reduction of distortion and hum, in the article describing the construction of a speech-amplifier-modulator unit in April *QST*.[1] Since the criticisms are all of the same nature, we have selected for publication a letter from J. R. Davey, 419 West 119th Street, New York, which gives a rather complete explanation of the operation of the inverse feedback circuit in this respect:

"The section of the article headed 'Curing Distortion and Noise' contains several statements

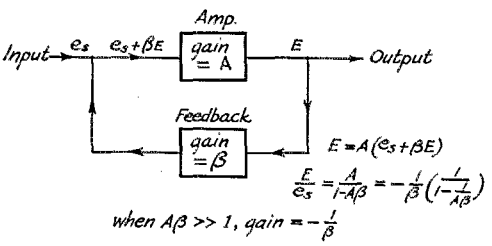

FIG. 1

which I believe to be incorrect. The author begins this section by showing how a 5-volt third harmonic in the 20-volt fundamental output of the amplifier used as an example is eliminated by using a feedback ratio of 1:10. A feedback ratio of 1:10 and a stage gain of 10 would actually cut the distortion and noise introduced in the stage to one-half its original value, and not eliminate it completely.

"The author also applies the same reasoning to the hum elimination problem, reaching the general conclusion that the feedback ratio should be the reciprocal of the gain of the stage. Here again this actually gives a reduction of 50 per cent in noise, distortion and the effective gain of the stage. The statement that if this ratio is exceeded overcompensation would result, and that the distortion would increase, is quite incorrect. As the negative feedback is increased, the noise, distortion, and effective gain all continue to decrease. To get complete cancellation of the noise and distortion would require infinite negative feedback and consequently zero gain. The error in the reasoning is that it neglects the fact that as soon as the noise or distortion is cancelled out in the output by some means, there is no longer any signal component to feed back and continue the cancellation.

"There also appears to be an inconsistency in that there is first mentioned the possibility of overcompensation and then later that the theoretical ratio of gain of stage is a minimum value and that larger amounts may be used. The actual feedback ratio used in designing an amplifier depends on how much gain it is economical to lose, how much feedback can be used without excessive positive feedback and oscillation at the extremes of the frequency range, and the amount of noise, distortion, or potential supply variations which are being compensated for. There is a feedback ratio in each case beyond which there is no point in going, either because of loss of gain, phase difficulties, or because a closer approach to the desired response characteristic would not be warranted.

"The usual type of nomenclature used in feedback amplifiers is given in Fig. 1. It is to be found in numerous publications treating the subject.

"The reduction of gain caused by the feedback is $\frac{1}{1-A\beta}$.[2] This is also the reduction in noise and distortion produced in the stage.[3] The characteristic with feedback approaches that of the feedback or β circuit. When, as in this article, $\beta = -\frac{1}{A}$, the factor $\frac{1}{1-A\beta}$ becomes ½.

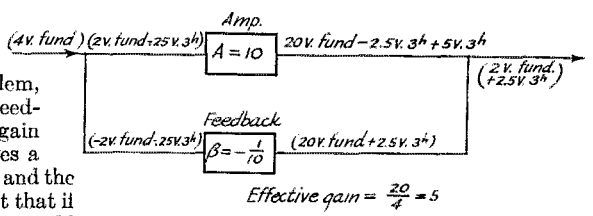

FIG. 2

[1] Carter, "Inverse Feedback Applied to the Speech Amplifier for the Amateur 'Phone Transmitter," *QST*, April, 1937.

[2] When the feedback is negative, as is the case here, β is negative.—EDITOR.

[3] The amount of distortion fed back to the grid circuit is equal to β times the resultant distortion in the plate circuit; i.e., the distortion remaining in the output with feedback present. The resultant distortion is the algebraic sum of the original distortion without feedback and the amplified fed-back distortion. Letting D = resultant distortion with feedback and d = original distortion without feedback,

$$D = d + AD\beta$$

Solving this for D,

$$D = \frac{d}{1-A\beta}$$

See Terman, "Feedback Amplifier Design," *Electronics*, January, 1937.—EDITOR.

The above factor is demonstrated below in obtaining the table given on page 47, April *QST:*

Freq.	*Gain, no feedback* (A)	*Gain with feedback ratio of* $\left(\frac{-1}{5}\right)$
50	$5\ \frac{A}{1-A\beta} = \frac{5}{1-\left(5\cdot-\frac{1}{5}\right)} = \frac{5}{2} = 2.50$	
1000	$10\ \frac{10}{1-\left(10\cdot-\frac{1}{5}\right)} = \frac{10}{3} = 3.33$	
10,000	$8\ \frac{8}{1-\left(8\cdot-\frac{1}{5}\right)} = \frac{8}{1.6} = 3.08$	

"The actual case of the author's distortion example is shown in Fig. 2. The 5-volt third harmonic produced in the amplifier is reduced one-half, to 2.5 volts, but not eliminated. If $A\beta$ should be made as high as 15 to 20, then much more reduction of distortion $\left(\frac{1}{16}\text{ and }\frac{1}{21}\right)$ would be obtained. I have no doubt that the amplifier as described works very well, but there appears to be no foundation for the desirable feedback ratio of $\frac{1}{\text{gain of stage}}$."

Improving DX

A Plan for Internationally Subdividing the Long-Distance Bands

IN THE course of a discussion at the last meeting of the Board of Directors on the possibilities of a "planned use" of amateur frequencies, the Board instructed that there be published in *QST* the substance of a proposal now under study in the International Amateur Radio Union. The proposal was made by the *Reseau des Émetteurs Français*, the French member-society of the I.A.R.U. It was the Board's desire to bring this proposal to all of the members of the League, that amateurs may judge for themselves what potentialities for improvement reside in such a plan, and what sacrifices they would be called upon to make to secure its benefits.

Briefly, the R.E.F. proposes that we all contract amongst ourselves to confine our operations in the 7-Mc. and 14-Mc. bands to certain portions of those bands, in each continent, keeping out of the other portions. In these other portions we would then find the amateurs of other continents free of interference from our own fellows. It is an idea that has often been discussed but on which no action has ever been taken. The present plan

(*Continued on page 84*)

W3FAR Wins 28-Mc. Contest

THE 1936 A.R.R.L. 28-Mc. Contest winner is Mr. John J. Michaels, W3FAR, of North Wales, Pa. The power input at his station was kept under 50 watts during the entire 12 months, and during March 1936 was kept at 5 watts with results comparable to those at any other time, showing the predominating influence of transmission conditions (rather than power levels) in determining successful communication at 28 Mc.



It will be a pleasure to send W3FAR the bronze medallion Achievement Award given by the League in token of his outstanding ten-meter work throughout 1936. The scoring in the competition depended on a weighting of 50 per cent for QSO-points (one per each 100 miles of completed contact), 25 per cent for development-research work reported, and 25 per cent depending on weekly condition reports to Headquarters. The standing of the four leading participants speaks for itself:

Call	*Total*	*QSOs*	*(50 max.)*	*Research Eqpt. (25 max.)*	*Reports (25 max.)*
W3FAR....	88.6	38.6	(10,664 pts.)	25	25
W8JFC....	61.0	50	(14,170)	10	1
W3BRZ....	53.1	10.3	(2,700)	20	22.8
W9HUV...	47.5	24.8	(7,211)	20	2.7

Honorable mention goes to OE1FH, who would have placed third had formal entries from outside W/VE been eligible. OE1FH had 360 W—VE contacts alone in the year '36. Seventy-seven other individuals were in the running by having submitted at least one weekly report, but failed to enter summaries for consideration. Meritorious work was reported especially from W9JAQ W1EWD W9FWG W5CPT W9GHN W9JZJ W9GBG W8CZR W6EWC and W6JN.

W3FAR's 45-page log is a valuable treatise on 28-Mc. communication. Scoring points dropped from 1820 in January to but 30 in June, rising to more than 1100 per month for September, October and November, with the record of 2619 points for December 1936. W3FAR found horizontal doublets better for reception than vertical antennas, due to polarization of man-made static. He states that his five-wavelength long flat top (167 ft. horizontal) exactly 33 feet above ground (or one wavelength), having lobes running through South America, N. Z., Australia and Japan and bringing S5 reports from all, was preferred to sharper beams tried giving S9 from Europe or other line of fire and fewer reports elsewhere. Careful orientation of any such antenna is required, the horizontal pattern directivity being especially important. In summer, when

(*Continued on page 66*)

Speech Versus Sine Waves

A Discussion of Class-B Modulator Capabilities

By Earl I. Anderson,* W8UD

"A little knowledge is a dangerous thing". That, unfortunately, seems to sum up the situation with respect to the modulating capabilities of Class-B audio amplifiers. The fact that speech wave-forms contain, on the average, only about half the power of a pure tone having the same peak amplitude has led too many amateurs to jump to an erroneous conclusion. The author here reiterates, with examples, statements made in QST some two years ago—principles which have been overlooked in the search for something for nothing. Every 'phone man should read it.—EDITOR.

IT is a well-known fact that with a sine-wave signal in plate modulation, the audio power required for 100% modulation is 50% of the d.c. input to the Class-C stage. With voice input, however, the average audio power requirements are in the vicinity of 25%,[1] a condition which has led many amateurs to believe that a given Class-B audio stage will modulate twice as much r.f. input with voice as it would with a pure tone. For example, it is assumed that a modulator rated to deliver 100 watts of audio will modulate a 200-watt Class-C amplifier with sine-wave input, and a 400-watt amplifier with voice input.

Unfortunately, this is not true. Average output is no indication of the peak output if the wave-form is not known, and *peak* power is the important consideration. However, the shape of voice waves is such that, in general, the *average* power for a given peak power is only about half that for sine wave having the same peak power. But the peak power requirements for 100% modulation are the same regardless of wave form, so the same peak power is required whether the input wave form is that of a pure tone or speech. This means that a given modulator set-up can modulate 100% without distortion only a definite Class-C stage power input; this input remains constant and is not a function of wave-form or average power.

However, since with voice input the average power is less, it follows that the average plate dissipation is less. Consequently, if plate dissipation is the only limiting factor, the operating conditions can be revised to secure more output with voice input than with sine-wave input, because excessive heat will not be developed on the plates. On the other hand, not only plate dissipation but also filament emission and insulation in the tube must be taken into consideration. If the filament emission is adequate, the peak current value may be increased until either it or the plate dissipation become the limiting factors; or if the insulation in the tube is sufficiently good the plate voltage may be increased until either it or the dissipation become the limiting factors. Whether or not the peak plate current and plate voltage may be increased depends upon the characteristics of each individual tube type. Operation in excess of ratings should not be attempted in the absence of positive knowledge that it is permissible in the individual instance, and will not result in tube failure or increased harmonic content.

In other words, if the sine-wave ratings are conservative from the standpoint of voltage or current, or both, new operating conditions may be chosen to permit greater output with voice than with sine-wave input, by taking advantage of the reduced plate dissipation with voice. The correct operating conditions would be the same as for the same *peak* output with a sine-wave signal, and would be calculated exactly as described in a previous article.[2]

The essential formulas needed for any Class-B calculation are reproduced here for convenience:

$$I_{pmax} = \frac{I_{pav}}{0.636}$$

where I_{pmax} = peak plate current to each tube
I_{pav} = max. average plate current to both tubes with sine-wave input

$$E_{Rp} = I_{pmax} \times R_p$$

where E_{Rp} = peak voltage developed
R_p = reflected load impedance to one tube (one-fourth plate-to-plate value)

Minimum voltage drop across tube $= E_b - E_{Rp}$
where E_b = plate supply voltage

$$\text{Power output} = \frac{E_{Rp} \times I_{pmax}}{2} = \frac{I_{pmax}^2 \times R_p}{2}$$

$$R_p = \frac{E_{Rp}}{I_{pmax}}$$

plate-to-plate load $= 4R_p$

* Douglas, Michigan.

[1] Grammer, "Greater Economy in Class-B Modulator Design for Speech," *QST*, August, 1935.

[2] Anderson, "Class-B Audio Design," *QST*, August, 1937.

SOME PRACTICAL EXAMPLES

In general, tubes such as 203-A's with all leads out the base cannot be operated at greatly increased voltages because breakdowns in the base or socket, if not in the tube, may result. It may be possible to increase the peak plate current for increased output. At the maximum rating for 203-A's we find the following:

D.c. plate voltage	1250 volts
Max. average plate current (2 tubes)	306 ma.
Optimum load impedance (plate-to-plate)	9000 ohms
Power output	260 watts

Analyzing these figures, we find:

$0.306/0.636 = 0.482$ amp. peak plate current to each tube

$0.482 \times 9000/4 = 1080$ peak volts developed

$1250 - 1080 = 170$ volts minimum drop across tube

From the curves it seems safe enough to run the peak plate current up to about 0.7 amp. At the increased current the drop across the tube would be proportionately greater,[3] so

$$170 : x = 0.482 : 0.7$$

$x = 250$ volts drop across tube at 700 ma.

$$\text{Power output} = \frac{(1250 - 250) \times 0.7}{2}$$

$$= 350 \text{ watts}$$

$$R_p = \frac{(1250 - 250)}{0.7} = 1430 \text{ ohms}$$

$1430 \times 4 = 5720$ ohms, plate-to-plate

By increasing the peak plate current and changing the operation conditions we have made it possible to modulate 700 watts input instead of the 520 watts possible under the sine-wave setup. Under these new conditions the maximum average plate current with sine-wave input for full output would be 0.7×0.636, or 445 ma. With voice input for the same peak output the maximum average plate current would be only about 50% as great. The 203-A filament will handle the 0.7-ampere peak plate current in good shape, and with voice input the average plate dissipation will be well below the ratings.

With a tube on which the plate voltage as well as the peak current may be increased, a much greater ratio of voice output to sine-wave output may be obtained. The T20 is an example of such a tube. Because its plate lead comes out the top the voltage may be increased greatly without fear of breakdown, and reference to the curves indicates that the filament is capable of emission far in excess of the requirements at the maximum rated output. The maximum sine wave ratings are as follows:

D.c. plate voltage	800 volts
Max. average plate current (2 tubes)	137 ma.
Optimum load impedance (plate-to-plate)	12,000 ohms
Power output	70 watts

Analyzing these figures, we find:

$0.137/0.636 = 216$ ma. peak plate current to each tube

$0.216 \times 12{,}000/4 = 650$ peak volts developed

$800 - 650 = 150$ volts drop across tube

Suppose we increase the plate voltage to 1000 without increasing the peak current.

$$\text{P.O.} = \frac{(1000 - 150) \times 0.216}{2} = 91.8 \text{ watts}$$

$$R_p = \frac{850}{0.216} = 3940 \text{ ohms}$$

$3940 \times 4 = 15{,}760$ ohms, plate-to-plate

Inspection of the curves shows that the peak plate current may be increased to 0.3 ampere safely. The drop across the tube will be proportionately greater

$$0.216 : 300 = 150 : x$$

$x = 208$ volts drop across tube at 300 ma. peak

At the increased plate voltage and current the calculation would be

$$\text{P.O.} = \frac{(1000 - 208) \times 0.3}{2}$$

$$= 119 \text{ watts}$$

$$R_p = \frac{792}{0.3} = 2640 \text{ ohms}$$

$2640 \times 4 = 10{,}560$ ohms plate-to-plate

With sine-wave input the maximum average plate current would be 0.3×0.636 or 191 ma. and the plate dissipation would be greatly in excess of the rated value, but with voice input for the same peak output the maximum average plate current would be only about 100 ma. and the plate dissipation should be approximately the rated value.

In conclusion, it is possible to modulate more input to the final stage with voice than with tone modulation, but the operating conditions must be altered to permit increased peak output—and definite knowledge of the tube capabilities is absolutely essential. The assumption that twice as much input to an r.f. amplifier can be modulated with voice as with sine-wave input in the same setup is entirely without basis in fact, and can only result in serious distortion if attempted. For distortionless 100% modulation the input to the modulated amplifier must not exceed twice the audio *capabilities* of the modulator.

[3] This assumption is not strictly correct, since the proportionality will depend upon the tube characteristics. In practice, however, no error of any importance is introduced, since the load resistance and excitation changes necessitated by the new operating conditions operate to maintain the minimum plate voltage fairly close to its original value. —EDITOR.

'Phone "Splatter"

Not all Broad 'Phone Signals Result from Overmodulation

BY DOUGLAS FORTUNE,* W9UVC

Those crackles extending out beyond the normal side-bands accompanying voice transmission may be caused by overmodulation — and again, they may not. So don't be too sure that your 'phone is "sharp" when the oscilloscope says the modulation peaks are staying below the 100 per cent mark. How come? Well, read what W9UVC has to say about a prevalent, but overlooked, cause of 'phone "splatter."

AT THE present time there is a great deal of discussion concerning the broad signals so prevalent in our 'phone bands. It is a fair estimate to say that 95 per cent of all 'phone stations occupy more space in the band than they should, in spite of the fact that some operators conscientiously try to reduce the band width by limiting the frequency response of their speech amplifiers. Although this measure does help matters, the "splattering" still continues. This condition, although generally attributed to overmodulation, may be due to a number of causes. In reality overmodulation, by the very nature of the design of the average amateur transmitter, is often an impossibility.

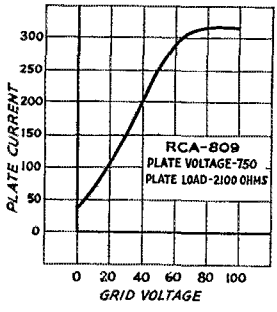

Fig. 1 — Dynamic grid-voltage plate-current characteristic of the 809 tube, used by the author as an illustration.

"Splattering" is the result of any condition which causes the 'phone signal to occupy an exceedingly wide channel. Since the channel occupied is equal to twice the highest audio frequency, any audio distortion in the form of harmonics will tend to broaden the signal. Thus a 'phone transmitter modulated by a 400-cycle sine wave occupies a channel width of 800 cycles. However, if the 400-cycle signal should contain an appreciable amount of third-harmonic distortion, the highest audio frequency would be 1200 cycles and the band width 2400 cycles. The addition of the third harmonic has thus trebled the band width. For this reason "splattering" is due not only to overmodulation but also to excessive audio distortion, most frequently introduced in an overdriven Class-B modulator or driver stage. A step in the direction of eliminating "splattering" in the bands is through the use of automatic modulation control. This circuit, if operated in conjunction with a properly designed modulator, actually will increase the average side-band power and eliminate excessive audio distortion.

For a given amount of *peak* power, speech operation of a Class-B modulator calls for an *average* plate current of only one-half the sine-wave value as specified by the tube manufacturer. Since the Class-B plate current meter is the usual modulation indicator the amateur, in nine cases out of ten, "kicks up" the average speech plate-current to the sine-wave value. Under these conditions the power represented by the increase in average modulator plate current corresponds to an increase in average power without appreciably increasing the peak power. This in turn corresponds to alteration of the wave shape, or the introduction of distortion in the form of harmonics which broaden the signal.

Average vs. Peak Power

Fig. 1 shows the dynamic characteristics of the RCA 809. It may be seen that the characteristic

* Thordarson Elec. Mfg. Co., Chicago.

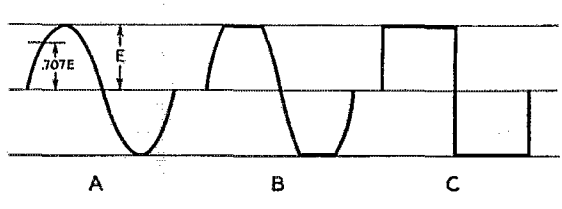

Fig. 2 — Three types of waves having the same peak values but containing different amounts of power. A, the familiar sine wave; B, flat-topped wave typical of an overdriven Class-B stage; C, the extreme case of a square wave.

is fairly straight up to a grid voltage of + 65 volts. However, beyond this point the characteristic bends sharply, with the result that above + 65 volts an input signal of any wave shape will become flat-topped. At this point the grid impedance of the Class-B stage changes abruptly, and further flattening of the wave takes place in the driver stage. It should be noted that beyond + 65 grid volts the peak current (from which peak power is determined) does not change appreciably although the average power, which is proportional to the area of the wave, increases rapidly. This may be seen more clearly from Fig. 2, which shows a sine wave, a flat-topped wave, and a square wave, the peak values of which are equal to *E*. The average value of each of the waves is different and is equal to the area under the wave divided by the base. It may be seen that as the wave form approaches the square wave the average power increases. Now it must be remembered that in a Class-B modulator the peak power is the limiting factor and the average power falls where it may, depending entirely upon the wave shape. If distortion is to be avoided in speech operation the average power must be equal to only one-quarter the peak value, and as a result the average power of speech, with peak power the limiting factor, is rather low in comparison to the sine wave or the square wave.

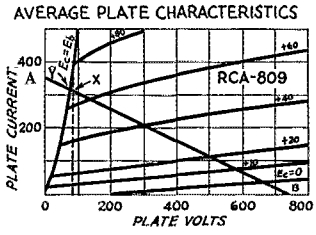

Fig. 3—809 plate-voltage plate-current family, showing load line.

For modulation purposes it is important to have as high a value of average power as possible without distorting the wave by causing it to become flat topped. To this end broadcast operators "ride the gain," increasing the gain for weak signals and decreasing it for strong signals. If the gain is not varied but set so that full output power is obtained with the strong signal, the output will be below normal for the weaker signal. By the same token if the gain is set so that full output is obtained from the weak signal, overload and distortion will result on the strong signal. However, if the gain is varied with the signal, the average power is increased without distortion taking place. The same effect of "riding the gain" may be obtained automatically by means of an automatic modulation control circuit which maintains the speech amplifier output constant for any input signal above a certain level. In this manner the amplifier gain is high for low input signals, and it is decreased proportionally for high inputs, thus increasing the *average* power.

It is not the purpose of this article to show the automatic modulation control circuit, which has already been described,[1] but a few words on the operation of such a circuit may be in order. For correct operation, the gain control should be advanced slightly beyond the point for normal operation so that on strong signals the rectifier circuit supplying the bias to the control tube will be brought into operation.

In using automatic modulation control, it is quite possible for the Class-B stage to be overdriven without overmodulation taking place, and as a result the amateur who has incorporated one of these circuits in his transmitter may be unaware of the "splattering" which he is causing. In using the automatic modulation control circuit, it is safe to say that the circuit is not operating properly if the average modulator plate current, on speech, is much greater than one-half the sine wave value. If it is found that this is so, the Class-B plate-to-plate load may be reduced below its original value.

Overmodulation?

The fact that overmodulation is sometimes impossible may be seen from Fig. 3, which shows the familiar plate characteristics of the 809. The normal load line of $\frac{8400}{4}$, or 2100 ohms, is shown at *AB*. For an average sine-wave power output of 100 watts, the peak plate current is $\sqrt{\frac{200}{2100}}$ or 0.315 ma. at point *X* on the load line. The peak voltage developed across the load is 0.315×2100 or 660 volts, and the minimum plate voltage is thus 750–660 or 90 volts. The 660 peak volts across one-half the primary are transferred to the secondary of the modulation transformer to vary the effective voltage of the Class-C stage. If by a wild stretch of the imagination the 809 grids were driven sufficiently hard so that the entire voltage of 750 volts were effectively across the load, the transmitter would be modulated only $\frac{750}{660} \times 100$, or 114 per cent. In actual practice the minimum plate voltage would not drop much below the value of peak grid voltage (point *Y*) and the transmitter would be modulated $\frac{750-65}{660} \times 100$ or 104 per cent, so that even under ideal conditions this would not cause a great deal of "splattering." Poor regulation in either the a.c. line or in the power supply will tend to lower the value of minimum plate voltage. The primary resistance of the output transformer also tends to reduce this value since the voltage lost across the primary must be calculated from the value of peak current, which is usually high even for a medium-power modulator.

The tube manufacturer's Class-B rating is based upon theoretical considerations, and does

(Continued on page 66)

[1] Plummer, Waller, "Negative-Peak Automatic Modulation Control for Plate Modulated 'Phone Transmitters," *QST*, October, 1937.

the "gain curve" is a horizontal line, C. In Figs. 2(c) and 2(d), the curves have been separated by increasing the cathode bias on triode B. The grid leak of triode A is returned directly to the common cathode connection and the bias developed on grid A is substantially independent of the change in voltage drop across the cathode resistor R_2, within limits.

As the difference in bias is increased, the resultant curves (C) begin to have sufficient slope to indicate amplification through the signal valve. Strong signals and noise peaks can be amplified to the full extent of the slope, but beyond that they can cause little change in the net voltage fed to the next stage, and accordingly the peaks are cut off or suppressed so far as the following circuits are concerned. In practice, the limitation of the peaks is readily appreciated, and the absence of noise crashes and blaring signals is a pleasant relief for which the price paid is a loss of part of the overall gain otherwise available from the r.f. stage devoted to control purposes.

If the bias on triode B is gradually made less negative than that on grid A, a similar series of effects would be obtained, as in Fig. 2(a). It may be necessary to apply an actual positive bias to the grid of triode B to obtain a sufficient separation of the characteristic curves.

Automatic Gain Control

As mentioned, the triode A, with grid-leak bias, tends to shift its operating point to a lower plate current, which is equivalent to moving its operating curve to the right. The decreased current should have the effect of lowering the voltage drop across the cathode resistor, thereby reducing the bias on triode B. The latter triode, on the other hand, will tend to draw a higher current, equivalent to moving its curve to the left by a relatively small amount. The net effect (when the bias on B exceeds the bias on A) is to reduce the slope of the resultant curve C, and therefore to reduce the effective gain of the signal valve. The length of the "linear" portion of the slope also decreases to a certain minimum which is a function of the curvature of the E_g-I_p characteristic of the triodes near plate current cut-off.

The net decrease in plate current caused by a strong carrier can be observed on a milliammeter in the cathode or plate lead, and amounts to as much as 10 per cent of a total current of from one to two milliamperes. The a.g.c. action, if any, on weak signals is important only as it concerns fading, and no experimental proof of such action has been attempted.

The proper setting of the adjustable cathode resistor, R_2, can be found readily enough by observing the point at which minimum signals are obtained, and then increasing the resistance until a satisfactory signal level, or the maximum tolerable noise level, is reached. The "minimum" setting depends upon the value of grid leak R_1 and the plate voltage used. In the experimental set-up, a one-megohm leak worked more satisfactorily than a half megohm or two megohms. The plate voltage was kept at about 90 volts, which may or may not be the optimum value.

Volume Expansion

From the foregoing discussion, it is apparent that a limited degree of "volume expansion" could be obtained by operating grid B at a more positive potential than grid A. It may also be noted that, when the biases are adjusted for low output with a.g.c. action, a strong carrier will reverse the relation of the biases and volume expansion will occur, particularly on modulation peaks. Under these conditions, the louder signals on the band come through with very little background and heterodyne noise. Transient peak voltages continue to be limited by the signal-valve action.

'Phone "Splatter"

(*Continued from page 29*)

not take into account practical limitations usually encountered in actual practice. As a matter of fact, it is safe to say that because of the above considerations most amateur stations cannot be modulated 100 per cent.[2] The remedy for the above condition lies in decreasing the Class-B plate-to-plate load, thus increasing both the peak current of the tubes and the value of minimum plate voltage. Although this procedure will cause overload for a sine-wave signal, for speech purposes the tubes are operating well within their average-current and plate-dissipation limits. In fact, it is possible to obtain a considerable amount of speech power by decreasing the plate-to-plate load to the correct value.[3] In conclusion, the intelligent use of the automatic modulation control circuit and the correct adjustment of the Class-B modulator will result in a clear-cut understandable signal which requires a minimum of band width and which causes a minimum of interference to adjacent channels.

[2] Provided good design principles are followed, however, the well-known tendency to use more than rated plate voltage, plus "conservatism" in providing more than enough audio power, account for the fact that there is a good deal of actual overmodulation.—EDITOR.

[3] For design information, see Anderson, "Speech versus Sine Waves," *QST*, March, 1938.—EDITOR.

Strays

When W1TS sent his msg nr 73 in the recent SS Contest, W7CMB replied with his nr 88. When 1TS sent his msg nr 88, VE3GT answered with his msg nr 73.

—•••—

W2QY says, "The wiring arrangements of too many ham transmitters are not so well suited for the label 'Underwriter's Approved' as for the version 'Undertaker's Approved!'"

Lop-Sided Speech and Modulation

Voice-wave Polarity and Its Effect on 'Phone Transmitter Operation

BY GEORGE GRAMMER,* WIDF

IN THE course of some years of observations of speech wave-forms in broadcasting it was found that voice wave-shapes, particularly from male voices, consistently have greater peak amplitudes on one side of the axis than the other. The interesting fact, as disclosed in a recent report on this work,[1] is that this "lop-sidedness" is always in the same direction. The shape of the wave will be carried through the speech amplifier intact provided the frequency characteristic is flat within reasonable limits, and provided the phase shift in the amplifier is proportional to frequency.

The original work was carried out with high-fidelity microphones of a type seldom seen in amateur stations, and it is of interest to investigate the effect of amateur-type microphones on the lop-sidedness of the wave. Fig. 1 summarizes the results of tests with three different crystal microphones commonly used by amateurs. No. 1 is a good grade of public-address microphone with a reasonably flat frequency characteristic. No. 2 is a highly-popular "communications" type in which the frequency characteristic is designed to accommodate the ordinary voice and to drop out the unessential frequencies. No. 3 is a high-output microphone with a somewhat restricted frequency range, its "quality" falling between the ordinary single-button carbon mike and the one here labelled No. 2. The six sets of data labelled "A" to "F" inclusive were taken on six individuals with a representative range of speaking voices. The numbers along the abscissas do not represent a particular scale, but are key numbers for the various vowel sounds given under the drawing. The ordinates show the ratio of the higher peak to the smaller.

These peak ratios were obtained by direct observation on a calibrated oscilloscope, using a two-stage resistance-coupled amplifier which was checked for flatness of frequency response and for linearity of phase shift with frequency. Because of the transient nature of the oscilloscope pattern a great many measurements were made on each sound for the purpose of averaging out observational errors — and also to average the ratios on a given sound, since the pattern changes considerably with slight changes in intonation or in pitch. A change in peak ratio of fifty or even one hundred per cent is not uncommon, depending upon just how the speaker voices the sound. However, the highest ratio observed in any case was of the order of 2.5:1 and (with one or two relatively insignificant exceptions in the case of microphone No. 3) never dropped below 1.

It is quite apparent from Fig. 1 that the microphone has a marked effect on the peak ratio; also, the same sounds spoken by the same person will give different ratios with different microphones. In the case of microphones Nos. 1 and 2, the peak ratios are of the same order of magnitude, but there is for the most part only a random relationship between the ratios and the sounds. With No. 3, the ratio is uniformly nearer 1 with all voices. Since Nos. 1 and 2 sound about alike on voice, while No. 3 to the listener has obviously poorer quality, the conclusion may be drawn that the poorer the microphone the less lop-sided its output. Also, the data for Nos. 1 and 2 may be grouped and taken as representative of the performance of good amateur crystal microphones, while No. 3 can be assumed to be typical of the cheaper units. For the latter, the maximum ratio is about 1.5:1 and, depending upon the voice, may average considerably nearer unity. For the former, the maximum is about 2 and the majority of sounds will give a ratio of 1.5 or more.

As a general rule, the long vowel sounds are more symmetrical than the short vowels, and it also appears (this is not included in the data, but was observed separately) that the long vowels have the higher energy content. If the speaker endeavors to maintain a uniform voice level, as judged by the effort expended in talking, the actual peaks will be higher on long than on short vowels, although the peak ratios will be higher on the latter. Practically, this means that the sounds which hit the transmitter the hardest are the ones which are most symmetrical. However, to maintain such a level accurately in communication would mean that more attention would have to be paid to the level than to the message content, which would be extremely difficult. As a result, one may easily find himself saying such a word as "hit" with considerably more force than "hope" in the course of a sentence or two. While it is possible to avoid going above a predetermined intensity in order to keep within normal modulation limits, it hardly seems feasible to exercise selectivity, conscious or unconscious, with respect to vowel sounds in relation to intensity.

* Technical Editor.

[1] Hathaway, "Effect of Microphone Polarity on Percentage Modulation," *Electronics*, October, 1939.

Peaks in voice waves extend farther in one direction from the axis than the other. With lop-sided speech, more effective modulation can be obtained by increasing the up-modulation percentage beyond 100%, but the process lacks appeal because of poor economy. An experimental investigation discloses the advantages of a different method of attack.

Modulation

A peak ratio greater than unity naturally will limit the amount of power that can be put into the side bands. Fig. 2-A shows the classic picture of 100% modulation with a sine-wave signal, or pure tone. The up-peak reaches the maximum value of twice the carrier amplitude and the down-peak reaches zero, the same distance in the opposite direction. With 100% modulation in either direction as a limit, a lop-sided wave-shape such as that shown in Fig. 2-B will swing twice as far in one direction as the other. Voice waveforms are very far from being so simple, but this wave-form will suffice for purposes of illustration. The larger peak could extend downward and the smaller upward — that is, the modulation pattern could be turned upside down — without changing the conditions at all.

If things are arranged so that the larger peak swings in the up direction, and the output of the modulator is increased so that the down-peak reaches the zero axis while the up-peak extends upward above 100% modulation the necessary distance to preserve the wave-shape, the condition shown in Fig. 2-C is reached. Here the carrier is being fully utilized, and since the peak ratio of the modulating signal is 2:1, there is a 2:1 increase (6 db) in side-band amplitude in Fig. 2-C as compared to 2-B. The case would be different if the larger peak had extended in the downward direction, since an increase in modulating signal beyond 100% downward modulation would immediately cause cut-off of part of the peak, so that the wave-shape would not be preserved. The proper polarity can be obtained by examining the modulated signal with an oscilloscope and, if wrong, by reversing the connections to the modulator output transformer secondary. The same result will be secured by reversing any other pair

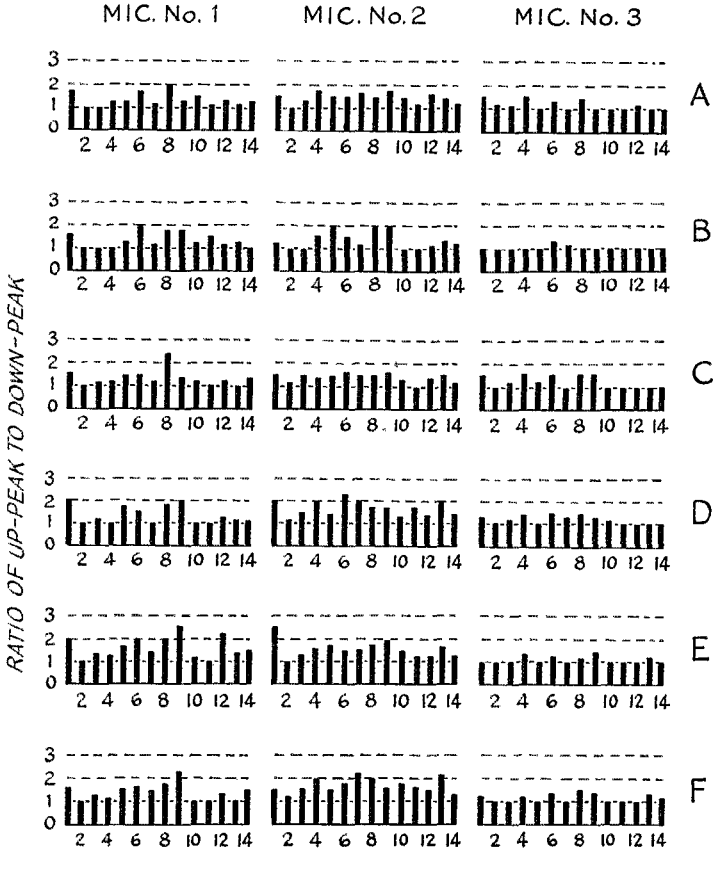

Fig. 1 — Peak ratios of various sounds with different speakers and different microphones. The length of each line represents the ratio of the largest peak on one side of the axis to the largest peak on the other. Sounds are identified by the numbers along the abscissa. (1) a as in "pay"; (2) aw in "paw"; (3) a in "bar"; (4) a in "pat"; (5) e in "be"; (6) e in "men"; (7) i in "hide"; (8) i in "hit"; (9) ing; (10) o in "go"; (11) o in "gone"; (12) u in "you"; (13) u in "but"; (14) oo in "boot".

of transformer-winding leads in the speech amplifier, or by reversing the leads from the microphone itself when this is possible. The modulation transformer secondary is usually most convenient.

A necessary corollary of this system is that the

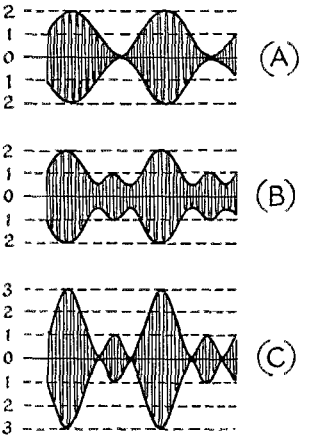

Fig. 2 — (A) *Normal modulation with a pure-tone signal;* (B) modulation with a lop-sided signal, limited to 100% in one direction; (C) modulation limited to 100% downward, unlimited upward.

modulation in the up direction must exceed 100% (in the case of a wave-shape with a 2:1 peak ratio, the up-modulation will reach 200% with the down-modulation set for 100%) — and 100% modulation is the limit set by the amateur regulations. As a regulatory measure this is undoubtedly intended to prevent unnecessary side-band splatter, and not to prevent full utilization of the carrier as a means of transmitting intelligence. For identical modulating wave-shapes, the number of side bands and their relative intensity will be exactly the same no matter how far the up-peaks extend beyond 100%, just so long as the down-peak does not cross the zero axis and thus cause complete cut-off of r.f. output for part of the time. This can be — and has been — checked experimentally by means of a selective receiver and a constant tone modulating signal of lop-sided waveform. There is, of course, an increase in side-band power as the modulation is increased, but the signal occupies no more space.

This being the case, it becomes of interest to look into the mechanics — and economics — of pushing the up-modulation beyond the 100% mark, disregarding for the moment such things as regulations and the question of definition of percentage of modulation when both up- and down-peaks are taken into account. Fig. 3 shows an ideal modulation characteristic of a plate-modulated stage, with plate voltage plotted against plate current in arbitrary units. The curve also would represent r.f. output current against either of the two quantities mentioned. With 1 representing the carrier, 2 represents the up-peak with 100% modulation, the power at this point being four times the carrier power. Normally the curve would extend only this far, since if the up-modulation is limited to 100%, the shape of the curve beyond the 100% point is of no particular interest. The 100% point therefore represents a design limit in choosing operating conditions (with a little more as a factor of safety) and is the point on which tube ratings, excitation, bias and so on are based. Also, for 100% modulation, the modulator must meet the familiar condition of supplying half as much audio power as there is d.c. plate input to the modulated stage.

Let's look first at the audio requirements. The fact that the average power in speech is about half that in a sine wave of the same peak amplitude is no doubt well known to most amateurs, but there are still many who find it hard to appreciate that the modulator, nevertheless, must be *capable* of just as much output for one type of wave-shape as the other. This comes about because the necessity exists for meeting the same *peak* demands in both cases. It is equally true here, and a modulator capable of aiding in the production of a modulated wave of the type shown in Fig. 2-B must be equally capable of producing the wave shown in 2-A, even though the actual power in the former is considerably smaller. That is, the peak output is the same in both cases, and peak output is the determining factor in all design considerations except average plate dissipation. The latter is smaller in the case of Fig. 2-B, since the average output and input are lower than with a sine signal.

In modulation we are dealing with amplitudes, and power varies as the square of the amplitude. If the modulating signal has a 2:1 peak ratio, and the modulation is increased from the type shown in Fig. 2-B to that in Fig. 2-C, the amplitude of the modulating signal has been doubled. Therefore, if a certain amount of audio power is necessary to produce Fig. 2-B, then four times

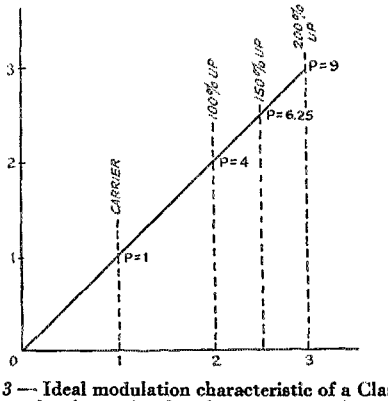

Fig. 3 — Ideal modulation characteristic of a Class-C amplifier, showing ratio of peak power to carrier power for various degrees of upward modulation.

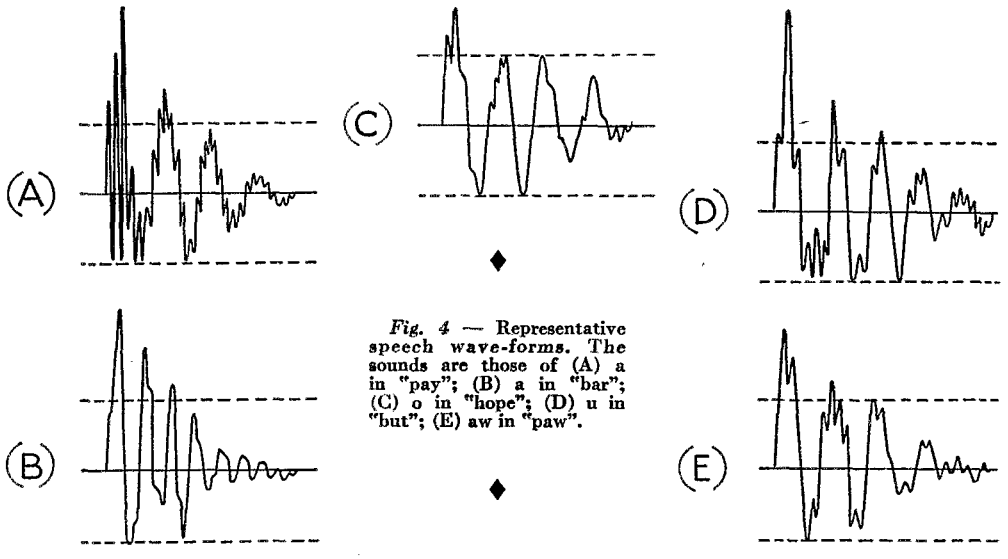

Fig. 4 — Representative speech wave-forms. The sounds are those of (A) a in "pay"; (B) a in "bar"; (C) o in "hope"; (D) u in "but"; (E) aw in "paw".

that power will be required to produce Fig. 2-C. Or, to take a numerical example, if the Class-C stage has an input of 100 watts, a modulator capable of 50 watts output will suffice for modulation such as is shown either in Fig. 2-A or 2-B, but an audio capability of 200 watts will be requisite for Fig. 2-C. The ratio of audio power required will vary as the square of the up-modulation percentage. For a signal peak ratio of 1.5:1, where the up-modulation reaches 150%, 2.25 times as much audio power capability will be required. The word "capability" is used throughout here because the actual power used depends upon the wave-shape, but the peak requirements are inflexible.

To handle the increased amplitude of the modulating signal, the range of linear operation of the Class-C amplifier must be extended. To give the type of operation shown in Fig. 2-C with a signal having a peak ratio of 2:1, the amplifier must be capable of being modulated linearly 200% in the upward direction. This means that the modulation characteristic must extend linearly for three units in Fig. 3 instead of two, and the peak power output becomes nine times the carrier power instead of four times. The power ratio would be 6.25 for 150% modulation, as shown.

Taken together, these things mean that application of the system shown at Fig. 2-C to an existing transmitter is out of the question. Few amateur transmitters, unless the builder has been ultraconservative in running everything far below ratings, are capable of being modulated appreciably above 100%. This is particularly true of the audio system, as has been pointed out before in these pages.[2] Many, in fact, cannot even be modulated 100%, because proper allowance has not been made for losses. Consider, for example, the common practice of buying a pair of Class-B tubes rated at say 250 watts audio output to modulate a carrier of 500 watts. The Class-B output transformer is of course not perfect, and even allowing the probably high figure of 90% for transformer efficiency the modulation will flatten off at 95%, unless the rated operating conditions are exceeded. A factor of safety of at least 10% to 20% is necessary to do the job of 100% modulation adequately, and that is probably as much spare power as the average well-designed amateur transmitter has. Since the peak emission of the tubes is fixed, and usually is given full consideration by the manufacturer in setting plate-current ratings for reasonable tube life, about the only way left for getting the increased audio power necessary is to increase the plate voltage proportionately. For a signal peak ratio of 2:1, or four times the audio power, this means an increase of four times in plate voltage which, if the tubes will stand it,

(*Continued on page 86*)

[2] Fortune, "Phone 'Splatter,'" *QST*, January, 1939.

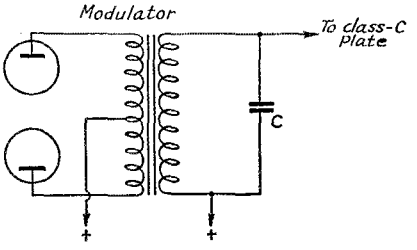

Fig. 5 — Simple condenser filter to cut off higher audio harmonics. The value of C may be between 0.002 and 0.006 μfd., the smaller capacities being used for the larger load resistances.

UNBEATABLE SPRAGUE VALUES

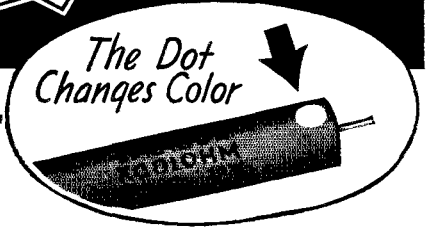

KOOLOHM RESISTORS . . . A development as revolutionary to resistors as the airplane was to transportation! Wires touch but do not short. Amazing non-inductive units sold at lowest prices ever. All values dissipate full wattage rating. Automatic overload indicator as illustrated above. Moisture-proof, heat-proof. Will not chip or break. Ask your jobber for Koolohms. Catalog free.



NOT A FAILURE IN A MILLION

The most famous condensers ever made — and still the fastest selling "by-pass" units on the market. Cost little, do a big job. Famous Sprague "inner seal" moisture protection and many other features. All ranges — at your jobber's.

SPRAGUE TC TUBULARS

TOPS IN PERFORMANCE
TOPS IN SAFETY

Four outstanding features make Sprague Transmitting Condensers safest and best to use. (1) Lifeguard Insulation Caps protect you from shock at terminals; (2) Terminals are insulated from cans for twice the working voltage or more; (3) Metal cans may be grounded automatically through mounting clamps; (4) All condensers are oil-impregnated and oil-filled (not oil-impregnated and wax-filled) with SPRACOL the 500 degree flash protection oil.

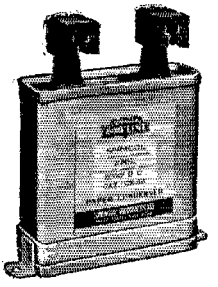

(Unconditionally guaranteed.)
(Round or Rectangular types.)

SPRAGUE PRODUCTS CO., North Adams, Mass.

UNMATCHED SPRAGUE QUALITY

District: W2CTT W2JVK N3CMV W3FE W3FWC N3GFV W3HHT W3HTX W3IGX W8ORD W8TNC/RFP. *Sixth Naval District:* W4AGI W4CQ N4ETE W4EVZ W4GJM C. D. Harris. *Seventh Naval District:* K4KD W4CRT W4EPV E. W. MacDowell. *Eighth Naval District:* N4DJS W4EKO W4EV W4FOK W4FTG W5ADZ W5ASQ W5AWT N5BAM W5BRR W5BUK W5BYC W5CWW W5DAQ W5DEO W5GWO W5HGG W5HQS W5IHM W9RTN E. L. Alkire, E. N. Cox, C. W. Cranford, G. Kohler, H. Lee, W. M. Monroe, C. B. Trevey. *Ninth Naval District:* W1BOD W1MES W2HHG N8ARR N8BKE W8FKF W8GIY W8HSW W8IET W8IHR W8KPL N8LKP N8LST N8LXA W8LYZ W8MTE N8MWS N8NDL W8PO N8PYW W8PZL N8QQY W8QZH W8ROX W8RFF W8RVK W8SWH W8SSL W8TNN W8TVK W8TYH W9ABS N9AGQ W9AIR W9AYH W9BQM W9BRY W9DI W9DLH W9DPO W9EDQ W9EGQ N9EGS W9END N9FFD W9FVG W9FWW N9FYX W9GM N9GWF W9GY W9HPJ W9HPQ W9HTU W9JPS W9KIK W9KPA N9KTK W9KUI W9KUR W9NGS W9NYW W9OEB W9ORU W9OUD W9PBI W9QMA W9QOA W9QUY W9RKV W9SEB N9SO W9SQT W9TDO W9UKV W9VFM W9VNN W9YQY W9YTV W9YYE N9YZX W9ZCH N9ZGB N9ZRM N9ZUO W9ZWI W9ZYM Reida Gabrielson, W. D. Henry, P. G. Hill, R. W. Martin, W. R. Pueschel, C. P. Snyder, C. X. L. Wastlund. *Eleventh Naval District:* W5ETM W5GSD N6ALO W6DCJ W6DQZ W6ELC W6FJK W6GTM N6HOS W6KOL W6LQX W6MTS W6MXN W6NRP N6NYN W6RNB W6TE W6WV W7GMK W9HIT R. B. Riddell, R. A. Wood. *Twelfth Naval District:* W6BFF W6BYS N6CHL W6CWR W6DJQ W6EEH W6EQY W6EY W6FYR N6GUR W6HSA N6LMZ W6NDY W6NGY W6OGJ W6OWV W6PGH W6PMY W6QPM W6QQU W7BAT W9JWC N9RRS C. E. Armistead, P. W. Gentine, R. E. McCarthy, J. S. Prichard. *Thirteenth Naval District:* N7ACF W7AND N7ANN W7ANU W7BMB W7CKG W7CZY W7DJJ W7EBS W7EKW W7EQC W7EWT W7EYZ W7FHY W7FRS W7GCA N7GEV W7GNJ W7GVH W7GWK W7HB W7HD W7HIU W7HLL W7HRM N7SY N7TK W7WC H. E. Daugherty, J. V. Ells, D. W. Graf, H. G. Halleck, D. R. Hutton, L. F. Jordan. *Fourteenth Naval District:* K6NSD. *Fifteenth Naval District:* E. W. Lockwood (NY1AA). *Miscellaneous:* K7AIF K7DOS K7EOH VE2AY VE2JG VE3AJN VE3GT VE4AJC VE4UN VP9X.

Voice Wave Polarity

(Continued from page 17)

means a new and bigger plate supply along with more driver power, better insulation, and probably new coupling components. That, or a new modulator system giving the requisite output at more reasonable voltages.

Much the same considerations apply to the Class-C stage. Unless the tubes have been operated conservatively, the chances are against their being able to deliver peaks of nine times the carrier power, simply because of filament emission limitations. However, assuming that it is possible, greater driving power becomes necessary. The usual limit of Class-C operation is an operating angle of 180 degrees (cut-off bias) at the modulation peak, or twice carrier plate voltage. In the case of 200% upward modulation, the bias should be set for cut-off at three times the carrier plate voltage. In turn, this means that the bias should be about 50% higher than the correct value for 100% modulation. The grid current will be about the same in both cases, since, while it may be necessary to drive the grid somewhat more positive to cause more plate current to flow, the

(Continued on next left-hand page)

Mims News

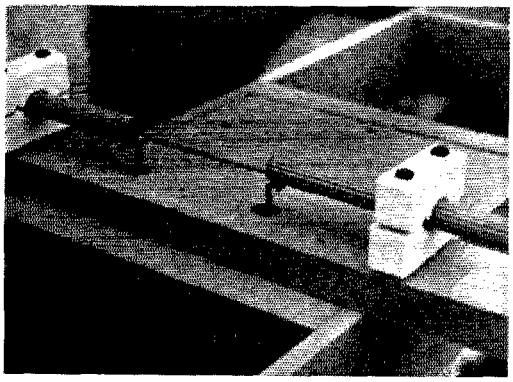

ELEMENTS and INSULATORS

- Finely Corrugated
- Tensile Steel
- Copper Plated
- Tapered Telescope
- Triple Coat
- Synthetic Enamel
- Minimum Sag
- Low R-F Resistance
- Rugged and Novel
- Design Porcelain
- White Glaze Finish
- No Metal Contact
- Easily Mounted
- Positive Support
- Locking Faces
- Makes Tuning Easy

Dear OM's:

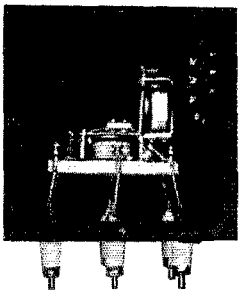

The Gadget to the right is the Dual Array Selector relay. It is mechanically latching with electrical resetting. A single pulse to either solenoid shifts the transmission line to the other array. Its quarter inch silver contacts are rated for 15 amps. The price complete is $17.50 or the unit less housing, etc. is $11.50. Shipment is made immediately on receipt of your distributor's order.

Since getting settled into our new plant, all orders have been shipped within three days' time and over 75% on the day the order is received. Place your order with your distributor now.

73,

M. P. Mims, W5BDB

See Your Distributor

MIMS RADIO CO.

SIGNAL SQUIRTER

PRODUCTS

TEXARKANA ARK. TEX.

period during which grid current flows will be somewhat smaller. On the whole, an increase in driving power of the order of 50% or more would be necessary. Many transmitters have an ample reserve of driving power, but many do not. In any event, the grid dissipates 50% more heat, continuously, and a hot grid frequently leads to emission troubles. The filament emission question could be dodged by increasing the plate voltage, lowering the plate current to maintain the same carrier input, and rematching the modulator to the Class-C stage, providing the tubes and tank condenser will handle the increased voltage without breakdown. Again a new power supply comes into the picture.

It is true that neither peak currents nor peak voltages reach the levels they would if normal design methods were used to provide a carrier for the larger modulator. However, still sticking to the 2:1 signal peak ratio, the voltages and currents are equivalent to those that would occur if the power input were increased 2.25 times, maintaining the same plate-circuit resistance. We doubt if the average ham transmitter would be capable of more than doubling its power without a breakdown somewhere. Boiled down, it seems that to make a bigger noise in the world a bigger transmitter is necessary. There is, of course, very little novelty in that thought. Operation of the type shown in Fig. 2-C is not something which can be applied to any existing transmitter, but requires redesigning and rebuilding along markedly ample lines.

Operating on the Signal

All this naturally leads to the question: If the regulations permitted, and the means were at hand for redesigning and rebuilding to meet the requirements imposed by operating the transmitter as in Fig. 2-C, would it be worth the trouble? We think not. There are other means of making full use of the carrier.

As mentioned earlier, the preservation of the peak ratio depends upon the audio amplifier's having the proper frequency and phase-shift characteristics. If, without changing the energy content of the wave, by varying one or both of these two it becomes possible to make the peak ratio close to unity at the output of the modulator despite a high ratio at the output of the microphone, an increase in side-band power equivalent to that given by the enlarged lop-sided modulation of Fig. 2-C can be obtained. A shift in phase alone is capable of doing it without changing the "quality" of the signal, since, under most circumstances, the ear is insensitive to changes in phase. Changing the frequency characteristic also is promising, since elimination of some of the frequency components in the wave will change its shape. As a general proposition, there will be a tendency to approach unity peak ratio when the phase or frequency characteristic of the amplifier is changed simply because this process makes the phase relationships between the various frequency components more or less random while the high peak represents a rather special case. There arises,

(Continued on next left-hand page)

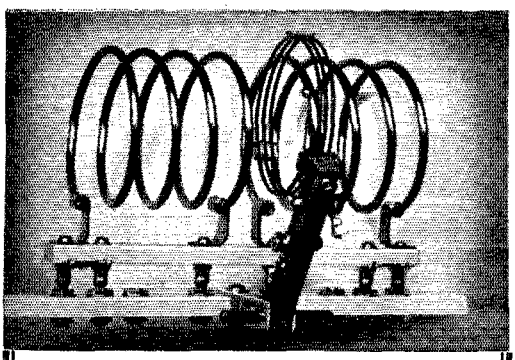

Now! 500-WATT VARIABLE LINK AIR INDUCTORS!

THE new B&W **Type TVH** 500-watt Variable Link Coils are designed for optimum L/C ratios from 10 to 160 meters with condensers of the Cardwell XE-160, 70-XQ or FEX types; or by combining 50-50 split stator condensers in conjunction with 25 and 50 mmfd. fixed air or vacuum condensers for all-band operation.

The 10-meter TVH and the TVH Base Assembly are illustrated above. 20, 40, 80 and 160-meter TVH's are also available. All feature a novel plug and jack arrangement which makes proper capacity selection automatic. They're the "hottest" arrangements for those 500-watt rigs you've ever seen — and the coolest coils! Send for details — or see them at your jobber's. (Ask him to show you the new TA and HDA Antenna Coils, too!)

BARKER & WILLIAMSON

Radio Manufacturing Engineers • ARDMORE, PENNSYLVANIA

IF you would like the personal coaching of the man who trained the "75 w.p.m. code men" — send the coupon. He will make a speed artist out of you — or refund the modest fee.

IF you would like to copy several words behind on a mill without fuss or worry, that same internationally known expert will coach you — and guarantee you get the results you want.

IF you are new as a Ham, but would like to start off with an expert's rating — the Junior Course of Instruction will start you off on the right foot.

WALTER CANDLER

has trained thousands of experts, including the present World's Champion and Runner-up. His coaching is *personal* and *guaranteed.*

FREE "Book of Facts" — an interesting book — describing the course in detail will be mailed to you *without obligation.* Write TODAY!

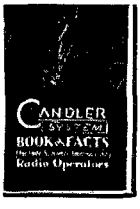

CANDLER SYSTEM CO.

DEPT. Q-2 ASHEVILLE, N. C.

therefore, an averaging effect which tends to iron out irregularities. Conversely, a wave starting with unity peak ratio, such as those from microphone No. 3 in Fig. 1, often tends to show an increase in peak ratio after passing through a frequency- or phase-distorting amplifier.

The chap with an inexpensive microphone appears to have an advantage over his higher-quality brother, since the voice energy turned out by his microphone is more symmetrical at the start. Hence he can modulate his carrier more fully. However, it is rather difficult to evaluate this advantage since the energy content of the outputs of the two microphones is not likely to be constant, because of differing response curves.

Phase and frequency shifting are only one answer, and really belong in another subject to be considered in an early issue. There is a simpler, but highly effective, alternative method. Its application goes back to the nature of the speech wave-form.

Fig. 4 gives drawings of several speech waves sketched directly from oscilloscope patterns. (Photographing is difficult because no voice can hold an unvarying wave-shape long enough to permit a good exposure with the trace fine enough to show detail.) Subject to minor inaccuracies inevitable in making a pencil reproduction of a continually changing pattern, they are nevertheless typical of the speech wave-forms observed with practically every type of voice when the horizontal linear sweep oscillator of the 'scope is locked in at the fundamental voice frequency. Each pattern represents one complete cycle. Although different voices differ considerably in the patterns they produce, they all turn out to be alike in producing but one or two really high peaks per cycle, these occupying a comparatively small part of the time of the cycle. These drawings all have been made to the scale of a down-peak of unity, indicated by the lower dashed line. The abscissa for up-peaks of unity is represented by the dashed line above the solid zero axis.

Now the energy in the wave is determined by the area enclosed between the curve and the zero axis. It is obvious from inspection of the drawings that in all the waves the energy in the up-peaks beyond the unity peak ratio line is very small indeed compared to the total energy in the whole cycle. (The waves shown, incidentally, represent as varied types as could be obtained.) It was suggested by K. B. Warner [3] that, since the energy in the part of the wave above a 1:1 ratio is so small, it should do no harm simply to chop off the peaks, thus turning the wave into one with unity peak ratio. This could and would modulate the carrier 100% in the normal way. After all, it does seem a bit unreasonable to have to provide four times the power capability in the modulator simply to take care of a peak which contributes only a few per cent to the total speech energy. In the ideal case where practically no energy is

[3] Along with the thought that most of us probably are doing it already anyway, in the attempt to keep the average modulation level as near 100% as possible, which is no doubt perfectly true.

(Continued on next left-hand page)

BROWNING Components for
FREQUENCY MODULATION RECEPTION
IN STOCK AT HARVEY'S

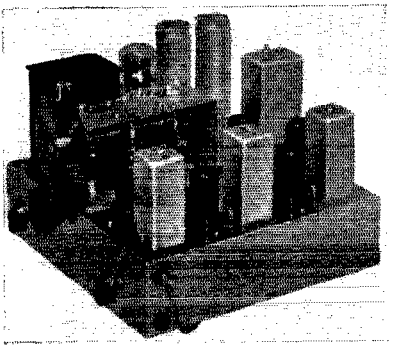

Receive Frequency Modulation Stations On Your Present Receiver

Browning Frequency Modulation Adapter consisting of RF, IF, and detector system, may readily be connected to the audio amplifier of your receiver and placed in your present console. You can also readily construct a complete receiver. All that is needed is the BL-3000A, BL-40T, and a few additional components.

WIRED IF AND DETECTOR SYSTEM — 3 Mc. broad-band IF amplifier consisting of a portion of the RF amplifier and mixer circuit, two IF stages, limiter, detector system, and output volume control with a.c. switch, built on 10½" x 9½" x 2½" chassis with all holes punched for RF Tuner, power supply and push-pull audio power amplifier. IF amplifier wired and carefully aligned. **Type BL-3000A** (less tubes) — *Amateur Net Price*.....**$24.90**

HIGH FREQUENCY TUNER — High frequency RF Tuner, wired, and aligned. Consists of a tuned antenna circuit, one stage of radio frequency amplification, and an oscillator circuit. Frequency range from approximately 40 to 54 Mc. **Type BL-40T** — *Amateur Net Price*.....**$11.70**

INDIVIDUAL COMPONENTS AVAILABLE FOR CONSTRUCTING BROAD-BAND 3 MC. IF AMPLIFIER AND FREQUENCY MODULATION RECEIVER:

3-Mc. IF and Detection Transformers with band widths of 200 Kc. for High Quality noiseless reception.

3-Mc. broad-band Interstage IF transformer — BL-3M — *Amateur Net Price*.....**$1.20**

3-Mc. Detection transformer (air tuned) — BL-3D — *Amateur Net Price*.....**$3.75**

(The IF amplifier, limiter and detector system requires three Type BL-3M and one Type BL-3D transformers.)

4" Sun-Ray Finish, nickel silvered vernier drive dial for Tuner. Type BL-40V — *Amateur Net Price*.....**$2.10**

Chassis — 10½" x 9½" x 2½" with holes punched for RF Tuner, (BL-40T), Mc. broad-band IF amplifier, power supply, and audio amplifier. Type BL-100C — *Amateur Net Price*.....**$2.70**

WRITE FOR DETAILED LITERATURE

MARION METERS

3-inch, square bakelite case; 0-1 MA. Ideal for field strength indicator, output meter, R meter, etc. Also available with 2500 DC V. scale. *Amateur Net Price*.....**$2.85**

POLYSTYRENE

	Net
4 x 4 x 1/16	48c
4 x 4 x ⅛	54c
4 x 4 x 3/16	59c
4 x 4 x ¼	59c
2 ounce bottle cement	29c
4 ounce bottle cement	39c

★ W2KWY, W2LJA, W2BQL, W2IJL ★

OUR *Best* VALUE IS OUR RECORD OF LOYAL SERVICE

HARVEY

Radio Company of New York

103 WEST 43rd STREET · NEW YORK, N. Y.

CABLE ADDRESS: "HARADIO"

lost by clipping the peak, this procedure would give an increase in side-band power equal to that given by operating the transmitter as shown in Fig. 2-C — 6 db for a peak ratio of 2:1.

Lest holy hands of horror be raised at the thought of the distortion that will result from such clipping, we hasten to say that, in the first place amateurs are — or ought to be — interested in communication rather than broadcasting, and second that it takes a keen ear for distortion to detect any difference in the quality. In fact, the reaction of the listener often is that a modulated wave with chopped speech sounds better, probably because the actual modulation is considerably increased when chopping is employed. Using an output meter on the receiver for measurement, the average increase in audio output when chopped *vs.* unchopped speech is used (both being limited to 100% modulation) is about 4 db with normal talking, which seems quite reasonable in view of the varying peak ratios encountered.

The modulator, of course, is simply one designed according to normal principles of 100% modulation; no extra audio power is necessary, nor does the Class-C amplifier have to be touched.

Side Bands

Peak-clipping brings up the question of whether new side bands are introduced because of the change in wave-shape. Because of the varying nature of speech it is difficult to make any conclusive observations on this, although consideration of the original wave-shape would lead to the assumption that the reverse is likely to be true, especially if the peaks are not chopped off sharply but are more nearly "rounded off." Again checking with a selective receiver, no difference could be detected. To obtain some data, it was necessary to resort to the lop-sided tone mentioned earlier. This represented a rather drastic case, since the peak to be clipped off was much broader than those encountered in speech. Careful checking showed that the original tone had side bands out to the 8th harmonic, but that the clipped signal had them out to the 12th. However, it was easy to confine the clipped wave to the channel space occupied by the original signal, by the simple process of filtering out the higher harmonics with a condenser across the secondary of the modulation transformer, as shown in Fig. 5. This may not be wholly necessary for speech, but it is a good thing to use as a precautionary measure. The value of capacity required will depend upon the circuit conditions, but usually will be in the vicinity of 0.002 to 0.006 μfd. It should be a mica condenser rated to stand the r.m.s. output voltage of the modulation transformer, which is 70% of the d.c. plate voltage on the Class-C stage. An even better scheme is to build out the modulation transformer as described a few months ago in *QST*,[4] a method which gives a marked cutoff at whatever upper frequency limit may be chosen.

[4] Bain, "Better 'Phone Operation without Splatter," *QST*, September, 1939.

(Continued on next left-hand page)

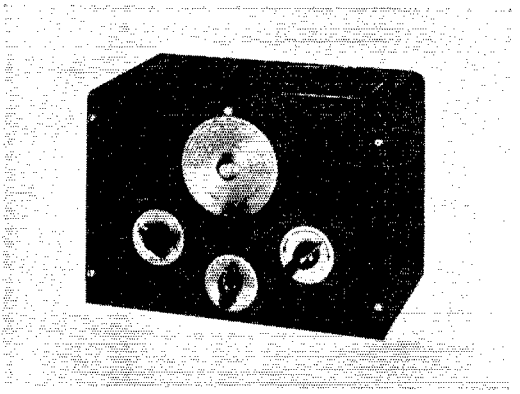

MORE SIGNAL LESS NOISE

• Using an 1852 tube, a gain of 1000 or more and image rejection ratios of 500 or more may be obtained • Coverage from 1.6 to 64 MC with band switching • Electrical bandspread • Regenerative circuit with exceptionally smooth control • Built-in filament transformer • May be used as Short Wave Converter • Completely wired and tested, Type 5DXP, Net Price $16.50, less tube • Also available in kit form, Type 5DXK, Net Price $13.50 complete except for tube • Send for Bulletin 103-A

BROWNING LABORATORIES INC
WINCHESTER, MASS.

TILTING HEAD—REMOVABLE CABLE SET ON THE
NEW TURNER 22D DYNAMIC
The mike for the man who wants the most for his money. Fully shielded for ham use, and rugged enough for the toughest P.A. job.

Only **$20.00** *List*

High Impedance with 8-ft. cable set
Add $1.50 for 25-ft. cable set
Deduct $1.50 for 50 ohm model
Get both style and performance at low cost, with this trouble-free operation Turner mike. Amazingly low feed-back. Packed with wiring diagrams and chamoisette mike bag to protect the rich satin chrome finish. Looks twice the price, and gets Broadcast quality reports.

Level —54DB
Range 40–8000 cycles

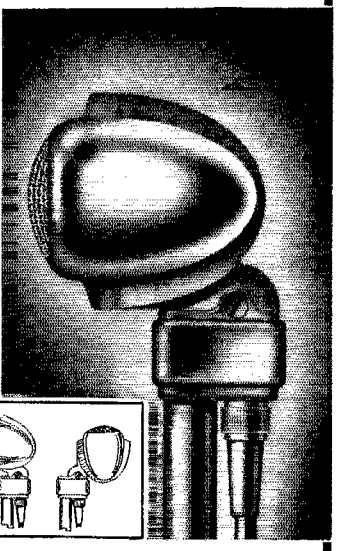

Send for Free Mike Catalog

THE TURNER CO. 904 17th St. N. E. Cedar Rapids, Iowa

There are two important things to keep in mind about peak-clipping, or limiting. It *must* be done in the audio system, so that any new side bands, if they exist, can be filtered out before reaching the Class-C stage. Also, utilizing non-linearity in the Class-C stage for peak chopping is against the regulations since it constitutes modulating an amplifier in excess of its modulation capability. Second, the polarity of the modulating signal must be such that the up-modulation peak is clipped. On the down side it is too likely to cross the axis and cut off the carrier, producing side bands that cannot be filtered out. Correct polarity, as already mentioned, is simply a matter of output-transformer secondary connections.

The ordinary saturating type of limiter circuit can be employed for peak clipping, but in many cases it will not even be necessary to install one of these. A very effective scheme is to make use of the flattening-out of the modulator above its peak output capacity, which is simply a question of making sure that the modulator is not capable of swinging the carrier more than 100% in the up direction. As pointed out, this will already be the case in the majority of amateur transmitters. If there is an excess of audio power available, the Class-C input can be increased to consume the whole output at 100% modulation, or else the modulator plate-to-plate load resistance can be increased to give the desired effect. The latter is done most simply by increasing the primary-to-secondary turns ratio of the output transformer.

It is necessary, of course, to have an oscilloscope, preferably one with a linear sweep, to check and set operating conditions. Connect the transmitter to a dummy antenna, couple the 'scope and get an unmodulated carrier of suitable size on the screen. It is advisable to calibrate the screen, which can be done by ruling five uniformly-spaced parallel lines on a piece of cellophane from a cigarette package and fastening it over the face of the tube. With no r.f. input, adjust the 'scope and the cellophane so that the horizontal trace on the screen coincides with the center line of the calibration. Next, adjust the r.f. input to the vertical plates of the 'scope until the unmodulated carrier exactly fills the space between the first line above and the first line below the center line. The two outer lines then represent the limits of 100% upward modulation. Downward modulation of 100% is of course represented by the modulated wave's touching the center line.

Now speak into the microphone and watch the screen closely. If the microphone and amplifier are fairly good it will be found that, with low percentages of modulation, the modulating wave-shape obviously extends farther in one direction than the other. If the longer peak does not extend toward the 100% up-modulation line but travels toward the center or zero line, the modulator output transformer connections should be reversed. In making this test be sure to use a small percentage of modulation so that any flattening-off effects which may be present in the modulator or r.f. amplifier do not confuse the results.

(Continued on next left-hand page)

SUN SPOT for FEBRUARY

2½ VOLT — 10 AMP
FILAMENT TRANSFORMERS
10,000 Volt Insulation
Bracket Mounting — Standard Construction — Fully Guaranteed
Quantity Limited at this Price!
75¢

KENYON CATH-O-DRIVE
Modulation Kits
Model 50 — 5 Watts of audio to modulate 50 watts of RF input. Essential Kit, consisting of all transformers and chokes, punched chassis and cover..... $18.37
Model 150 — Foundation Kit, as above..... 22.32
Model 600 — Foundation Kit, as above..... 34.43
Get your copy of handy circular, showing schematic diagrams, list of parts and prices.

MEISSNER DE LUXE
SIGNAL SHIFTER
Variable Frequency Exciter Unit.
Voltage regulated and temperature compensated.
Provides stability comparable to crystal control.
Permits quick shift and full coverage of every band — 10, 20, 40, 80 and 160.
Completely wired and adjusted (less tubes).....$44.05

Browning FREQUENCY MODULATION
Build your Own Frequency Modulation Tuner or Receiver. All parts in stock.
Also available assembled and wired.
Write for your free copy of interesting circuit diagram and price list.

BLILEY XTALS
Our large stock assortment of Bliley Crystals permits you to choose practically any spot frequency you desire in the Ham Bands.
Every type in stock — BC-3, HF-2, LD-2, VF-1, B-5, CF-1, SMC-100.
Free — Bliley list and Amateur Band Chart.

WARD LEONARD ANTENNA RELAYS
at Reduced Prices
Mycalex Insulation — 110 V AC Coil — Large, widely spaced contacts — D.P.D.T.....$4.70
As above, and with 2 extra contacts for transmit-receive power.....$6.47
At these reduced prices you can afford to get the best!
Descriptive Ward Leonard circular on request.

NEW PRODUCTS AT SUN
Hallicrafters Super Defiant Receiver
Howard Progressive Series Receivers
Kenyon Cathode Modulation Kits
Hammarlund "200" Super Pro
National (Improved) NC101XA
Frequency Modulation Receivers
All receivers, transmitters and parts are available on Sun's easy terms at lowest charges anywhere.
SEE IT AT SUN

SUN SERVICE
Sun Radio is manned by experienced Amateurs and technical men. We are here to serve you in every way possible. You will find us pleased to render technical assistance on receiving, transmitting and special problems.
☆ EXPORT ORDERS SOLICITED
☆ MAIL ORDERS PROMPTLY FILLED

SUN RADIO CO.
212 Fulton Street, Dept. DT New York
Cable Address: SUNRADIO NEW YORK

Next, having polarized the output transformer correctly, and having found a word which gives a definitely lop-sided wave, increase the gain while speaking the same word into the microphone until down-peak of the wave just touches the zero axis, giving 100% downward modulation. Observe the up-peak at the same time. Probably it will have flattened off considerably as compared to its shape at low modulation. If it flattens off close to the line representing 100% upward modulation, all is well and the only thing remaining to be done is to connect a condenser across the modulation transformer secondary. If the flattening occurs well above the 100% line, either increase the Class-C input or the modulator load resistance, as already described, until the desired condition is reached. If the flattening occurs below the line the transmitter cannot be modulated 100%, which may be caused either by insufficient excitation for the r.f. amplifier or by insufficient audio output. The remedies for these ills are not within the scope of the present story, having been covered many times in *QST* and the *Handbook*.

Obviously, similar methods may be applied to the other types of modulation. Present space does not permit going into detail, so it must suffice to repeat that the peak clipping must be done in the audio system, that simple filtering should be provided to take out any possible extra side bands introduced by the chopping, that the output transformer polarity should be chosen as described, and that the adjustment must be carried out with an oscilloscope. The picture on the face of the 'scope will look the same for any type of modulation. Unquestionably many transmitters already are being so modulated — many even with considerably more drastic peak chopping — and for those we can close with this advice: No one will worry much about what you do to your voice wave-shape so long as you don't make it take more than its share of space in the spectrum. Be sure you don't do your chopping by modulating in excess of 100% downward. Put in an audio filter to wipe out those side bands several kilocycles away from the carrier. You'll get plenty of modulation, and the other fellows won't get monkey chatter.

Strays

Television experimenters in the vicinity of Cincinnati will be interested in the fact that the operators of WLW have applied for a construction permit for a 1000-watt television transmitter.

—•••—

A bad case of transient parasitics in an 807 stage, which were raising havoc in the form of clicks in the b.c. band, was cured by W8KWA by means of a 0.005-μfd. by-pass condenser from the cold end of the grid-circuit r.f. choke to ground by-passing the grid leak.

—•••—

Another "ham" has joined the ranks of amateur radio. This time it's Henry Hamm of Youngstown, Ohio, who has drawn the call of W8TAD. — *W8FRY.*

Audio Filters for the Speech Amplifier

Designing Around Available Components

BY JULIUS L. GALIN,* WILOP

• If you have any thoughts toward speech clipping, you've got to have a good low-pass filter to back up the clipper. Here's how to design an audio filter that will meet the rather tough requirements. No previous knowledge of filters is required.

RECENT issues of *QST* have carried a number of articles on speech clipping and filtering.[1] Whether or not clipping is used, the reason for filtering is to restrict the sidebands of a 'phone transmitter. The higher the audio frequency impressed on the carrier the wider the sidebands. High-frequency sidebands that are not essential to intelligibility cause unnecessary interference to neighboring channels and, since most communications-receiver i.f. amplifiers do not pass much sideband energy above about 3000 cycles, there is no reason why these useless frequencies should be transmitted. For communicating purposes audio frequencies above 2500 or 3000 cycles are not necessary for intelligible speech.[2]

Most amateurs look upon filters as being very complicated and difficult things to design and construct. The writer, knowing very little about audio-filter fundamentals, shared in this feeling — but nevertheless decided to make the attempt. Equipment was available to make measurements on experimental filters, so it was readily possible to check performance. As a result, the writer is convinced that any amateur without previous experience with filters, but having a knowledge of elementary algebra, can design and build thoroughly-satisfactory audio filters. Precision components are not necessary.

Designing the Filter

There are many types of filters that could be used to do the particular job. The most common types can be classified as either a pi network or "T" network. Electrically these two types should work the same. However, in this article we will concern ourselves with the pi type because of the convenience in handling the design.

Many readers are not aware that the familiar receiver power supply employs a simple pi network as a low-pass filter. A low-pass filter attenuates all frequencies above a certain frequency called the "cut-off frequency" and passes all frequencies lower than the cut-off frequency. Since we are dealing with audio frequencies that fall in the lower end of the audible spectrum, a low-pass filter would be the type suitable for attenuation of the unnecessary high frequencies, and yet pass the wanted low frequencies. After examining the various low-pass filters in Terman's *Radio Engineers' Handbook*[3] a shunt *M*-derived filter was selected for simplicity and adaptability to a speech amplifier. The name itself implies fundamentals that are more advanced than will be covered, but Terman's *Handbook* can be consulted for the theory. It is sufficient to say here that the shunt *M*-derived filter, shown in Fig. 1A, not only has the cut-off frequency that is characteristic of the simple pi section but also will provide an attenuation peak at a selected frequency outside the passband.

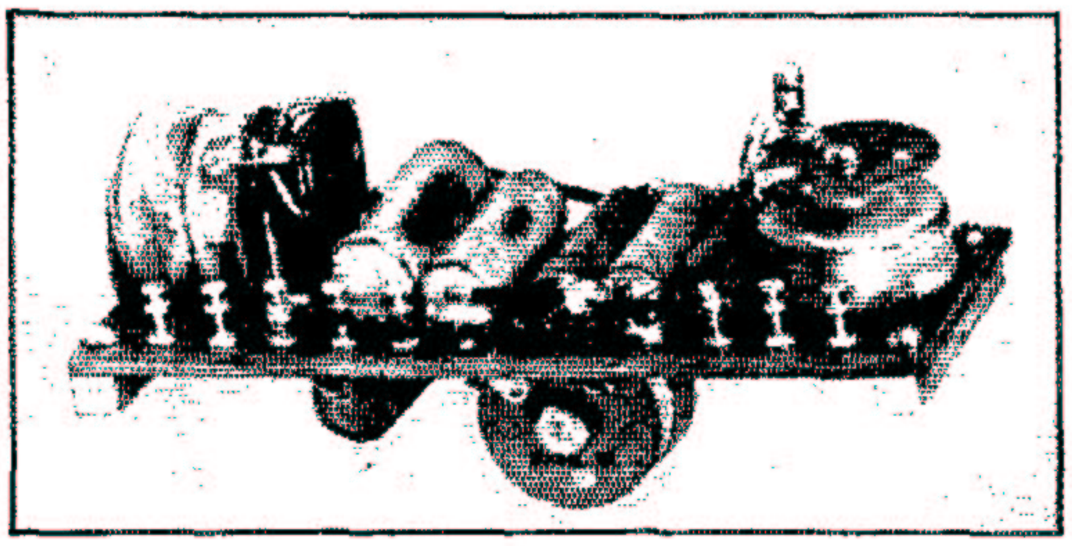

Using high-inductance r.f. chokes and tubular paper condensers, a three-section filter is quite compact and relatively inexpensive. This one is mounted on a 2 × 6-inch terminal board.

When the filter is to be connected to the plate of an amplifier tube, it is important to keep the load or terminating resistance as high as possible. The reason for this is to obtain the largest possible signal voltage from the filter stage. With available components, the value of terminating resistance that can be used will be small compared to the optimum load for the tube, and in such a case the output voltage will be approximately proportional to the load resistance (*R* in Fig. 1A). The value of *R* depends directly on the

* 5 Clay St., Hartford, Conn.

[1] W. W. Smith, "Premodulation Speech Clipping and Filtering," *QST*, February, 1946; "More on Speech Clipping," *QST*, March, 1947. Also J. W. Smith and N. H. Hale, "Let's Not Overmodulate — It Isn't Necessary!", *QST*, November, 1946.

[2] Grammer, "House Cleaning the Low-Frequency 'Phone Bands," *QST*, May, 1947.

[3] F. E. Terman, *Radio Engineers' Handbook*, McGraw-Hill Book Company, New York.

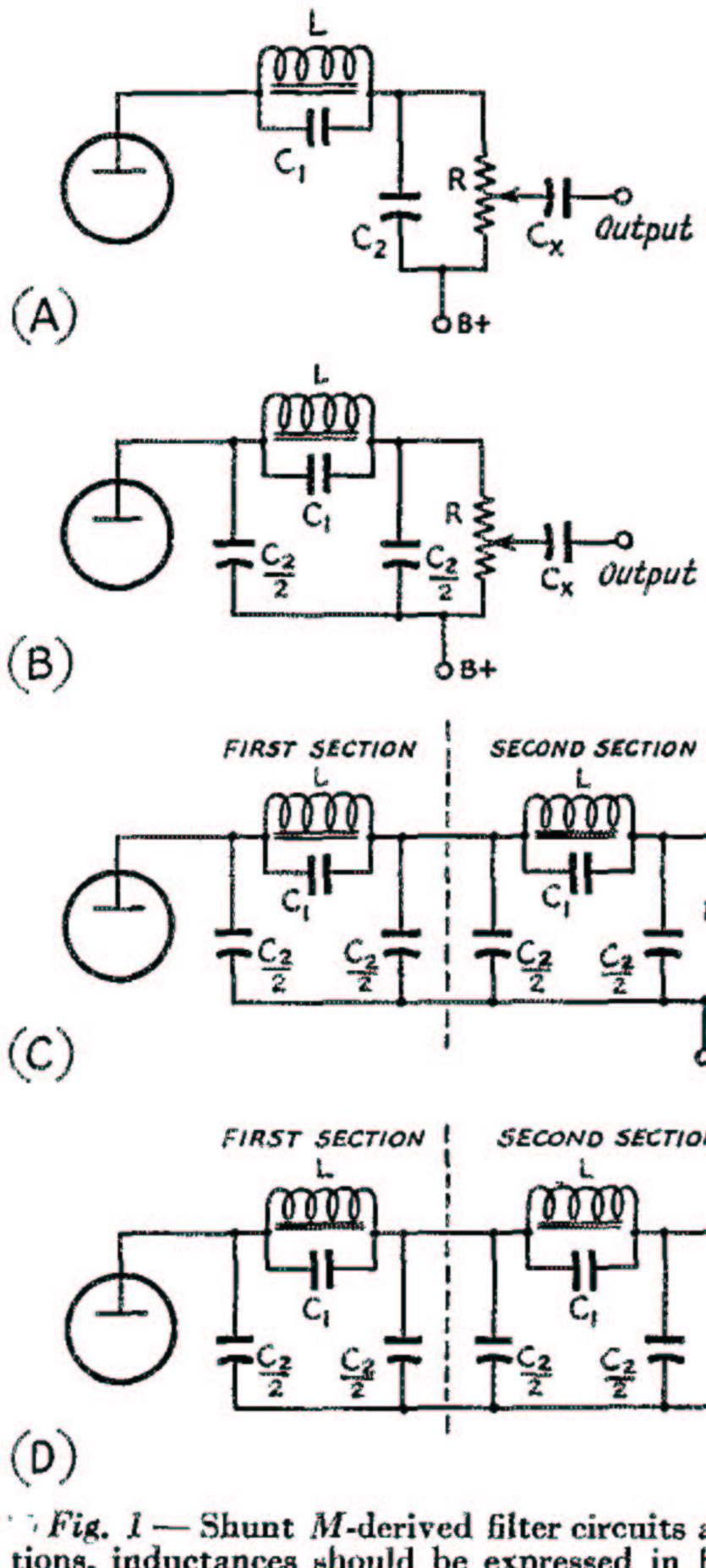

$$L = \frac{RM}{\pi f_c} \quad \{\text{SEE TEXT}\} \qquad (E)$$

$$C_1 = \frac{(1-M^2)\cdot 10^6}{4M\pi f_c R} \qquad (F)$$

$$C_2 = \frac{M\cdot 10^6}{\pi f_c R} \qquad (G)$$

$$R = \pi f_c L/M \qquad (H)$$

M = See text

f_c = See text

C_x = Coupling condenser to next stage

Fig. 1 — Shunt *M*-derived filter circuits and design formulas. In the equations, inductances should be expressed in henrys, resistances in ohms, frequencies in cycles per second, and capacitances in microfarads.

inductance, L, in the filter. Iron-core r.f. chokes were chosen for use in the filter because of their compactness, availability and high Q as compared to larger iron-core coils. A 250-millihenry choke was the largest unit of its kind available for the experiments. The value of R can be found from the equation in Fig. 1H.

Before any of the equations can be solved, M must be found from the equation

$$M = \sqrt{1 - \left(\frac{f_c}{f_h}\right)^2}$$

where f_c = cut-off frequency,
f_h = frequency of peak attenuation.

This brings up the problem of choosing f_c and f_h. The choice of f_c and f_h is very important inasmuch as the shape of the response curve is greatly affected by M (which depends on f_c and f_h only). Although it is theoretically possible, with pure reactances, to obtain a cut-off frequency equal to the frequency of very high attenuation, practical considerations require f_c and f_h be not too close to each other. One reason is the impracticable size and quality in the condensers and chokes; the other reason is that the attenuation will not be very large at frequencies above the cut-off frequency if the peak attenuation frequency is close to or the same as the cut-off frequency. It has been found by experiment [3] that if the value of M is equal to approximately 0.6, the filter will have comparatively-flat response characteristics in the passband (voice range) and will still attenuate effectively the unnecessary high frequencies. Very elaborate filters can be designed to give better response characteristics than the shunt M-derived, but they are not necessary for practical purposes.

It is sometimes quite necessary to connect sections of filters together as shown in Figs. 1C and 1D for greater attenuation of high frequencies, without affecting the passband. As long as sections of the shunt M-derived filter are designed for the same load resistance, they can be connected in cascade as shown in Fig. 1D. Only one terminating resistance is necessary for the complete filter. If f_c is kept constant, a different value of f_h may be assigned to the various sections without affecting the terminating resistance. This practice will give more uniform suppression at all frequencies above cut-off than is possible with a series of sections each having the same f_h. However, if f_c needs to be changed for different sections to hold M near 0.6, L must also be changed to keep R at the same value for all sections.

Losses in the filter itself are mostly attributable to the a.c. resistance of the coils. With the r.f. coils mentioned they are small and need not be considered in design.

The number of sections to be used in the filter will depend on the amount of attenuation needed. The total attenuation of the filter is the sum of the attenuations in all sections. A one-section shunt M-derived filter is shown in Figs. 1A and 1B. Either circuit may be used since the two are electrically equivalent. In general, at least two sections, as shown in Fig. 1C, should be used, and a third section may be added, as shown in Fig. 1D, to give very high attenuation at all frequencies outside the passband. Each section is designed separately, and they are then joined to-

TABLE I
Table of Values Used in Experimental Filters

Section	C_1 ($\mu fd.$)		C_2 ($\mu fd.$)		*R (Ohms)*		*L (Henrys)*	*M Computed*	f_c *Cycles*	f_h *Cycles*
	*Ideal**	*Actual*	*Ideal*	*Actual*	*Ideal*	*Actual*				
First	0.0063	0.006	0.0199	0.02	3550	4000	0.25 hy. (given)	0.665	3000	4000
Second	0.0063	0.006	0.0199	0.02	3550	4000	0.25 hy. (given)	0.665	3000	4000
Third	0.0033	0.003	0.0125	0.015	3550	4000	**Computed 0.157 hy. but used 0.20 hy. (Millen 34400–200)	0.696	5000**	7000

* For $M = 0.6$.
** Cut-off frequency changed from 3000 to 5000 cycles.

gether to form the complete filter as shown in Fig. 1D.

Practical Filters

A one-section filter, as shown in Fig. 1B, was tried first. Since L was previously decided upon as a 250-millihenry choke (Millen 34400–250), R was determined from the equation shown in Fig. 1H. Bearing in mind the considerations discussed earlier, f_c and f_h were chosen as 3000 and 4000 cycles, respectively. After solving for M, using these values for f_c and f_h, the rest of the components were determined easily by direct substitution in the formulas shown in Fig. 1.

The closest stock values were used in making measurements for the response curve shown in Fig. 2. Table I shows the ideal values of components compared with values actually used.

The curves resulting from use of high- and low-impedance signal sources are shown in Fig. 2. The 50-db. line represents the hum level of the better-than-average high-gain speech amplifier. It will be noted that with a one-section filter insufficient attenuation was achieved. Enough signal at high frequencies was passed with the gain open full to override the hum level of the amplifier.

It was then decided to add another section to the filter as shown in Fig. 1C. The same choice of f_c and f_h was used so that the components were the same as the first section. The output condenser of the first section and the input condenser of the second section can be lumped together to form one condenser. Values computed and values actually used are listed in Table I. The curve shown in Fig. 3 is the result of experiments with a two-section filter. Note the large attenuation at approximately the frequency of peak attenuation. Some high-frequency signal above 4500 cycles was passed, but for most practical purposes this amount of attenuation would do a satisfactory job of cutting sidebands.

A third section was added to the filter as shown in Fig. 1D to see if the high end could really be attenuated. Since the two-section curve began to level off at 7000 cycles, this frequency was chosen as f_h for the third section. In order to keep M at approximately 0.6 and R constant for all sections, 5000 cycles was chosen as f_c. The values used and the ideal values are listed in Table I. The curve shown in Fig. 4 represents the results with a three-section filter. It will be noted in Fig. 1D that a section similar to Fig. 1A was

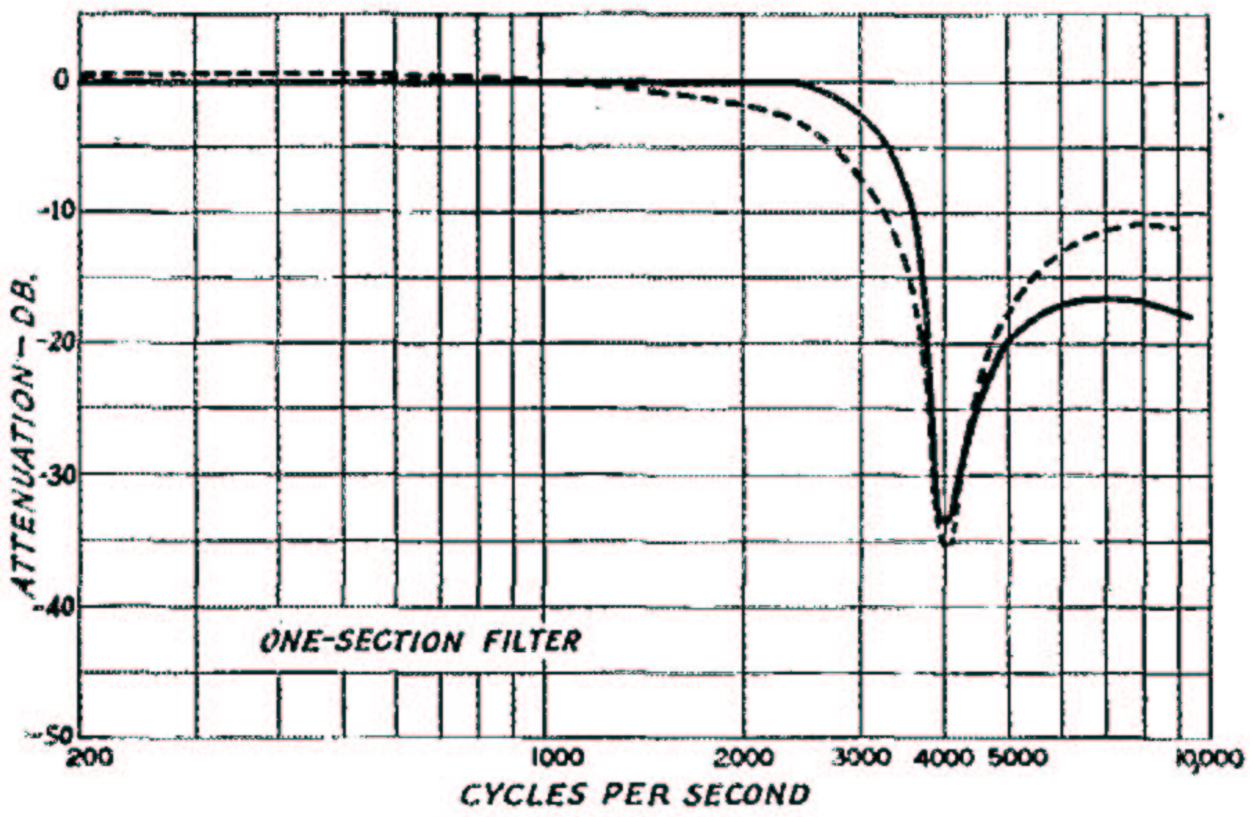

Fig. 2 — Measured attenuation characteristic of a single-section filter (Fig. 1B) using the constants given in Table I. Reference level (0 db.) is the output level at 1000 cycles. The solid curve is the response with the source of signal having an internal impedance of 7500 ohms, simulating the plate resistance of a medium-μ triode. Dashed curve is the response measured with a 500-ohm signal source.

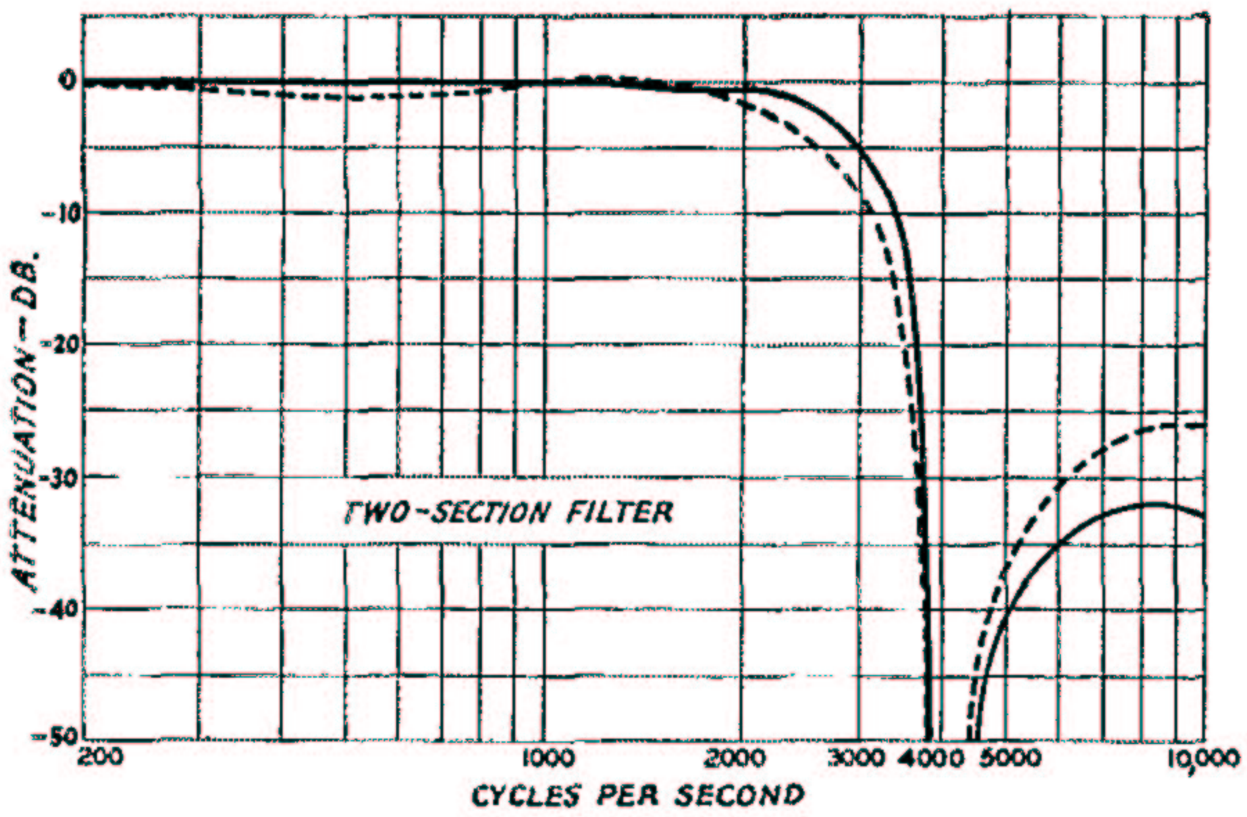

Fig. 3 — Attenuation characteristic of a two-section filter (Fig. 1C) using constants given in Table I. Measurement conditions same as in Fig. 2.

used instead of the type shown in Fig. 1B. There should be no difference in results since both are electrically the same. The results were excellent. Attenuation was high enough to suppress all frequencies above 4025 cycles to a level far below the hum of the amplifier.

Some Suggestions

Increasing the capacitance of the output condenser of the last filter section will increase the attenuation at the higher frequencies outside the passband without greatly affecting the shape of the curve inside the passband. Two or three times the theoretically-correct capacitance can be used. In the case of a two-section filter having the curve shown in Fig. 3, for example, the output capacitance is 0.01 μfd. ($C_2/2$). Increasing the capacitance to 0.02 or 0.03 μfd. will increase the attenuation above 4500 cycles. It also will have the effect of making the cut-off less sharp; this is not at all a disadvantage, because a very sharp cut-off tends to cause transients that introduce a sort of "ringing" on voice peaks.

The entire filter unit can be constructed on a standard 2-inch-wide mounting board, its length depending on the number of sections used. Care should be taken to mount the iron-core chokes at right angles to each other, to minimize coupling that might affect the characteristics of the filter. The photograph shows a three-section unit constructed in this fashion. (This particular filter is not the one whose performance is shown by the curves of Fig. 4, but is similar in circuit. It was designed to use the 125-millihenry r.f. chokes commonly available, and for this reason a lower value of terminating resistance — 2000 ohms — is required. Also, the cut-off frequency in this unit was set at 2500 cycles rather than 3000, giving even smaller effective channel width without affecting intelligibility. Its out-of-band attenuation is of the same order as with the unit shown in Fig. 4.)

When the high-frequency cut-off is in the vicinity of 3000 cycles, the naturalness of speech may be somewhat improved by attenuating at the low-frequency end below 200 cycles. This can easily be done by reducing the capacitance of interstage coupling condensers in the amplifier to about 0.005 μfd.

Insert the filter in the plate circuit of a speech-amplifier stage where the level is fairly high — at least several volts. This will decrease the possibility of hum pick-up and will attenuate any harmonics, above the cut-off frequency, that may be generated in the preceding low-level stages. An extra stage of audio will be needed to compensate for the low gain in the filter stage. One half of a twin triode such as a 6SN7GT can be used to build up the gain while the other half incorporates the filter.

The d.c. plate voltage for the tube should be applied through the filter, as indicated in Fig. 1. This allows the use of a coupling condenser of normal capacitance between the filter and the grid resistor of the next stage. A wire-wound potentiometer can be used for the load resistance, *R*. The output of the filter stage can then be conveniently adjusted by either a knob or a screwdriver.

If the expected results are to be obtained from the transmitter after installation of the filter, it is very important that the audio stages following the filter be free from distortion. The modulated r.f. amplifier also must be functioning properly, since the filter cannot cure a broad signal caused by nonlinear operation or overmodulation. Only through conscientous attention to these critical factors will amateurs realize maxium utility from the crowded 'phone assignments.

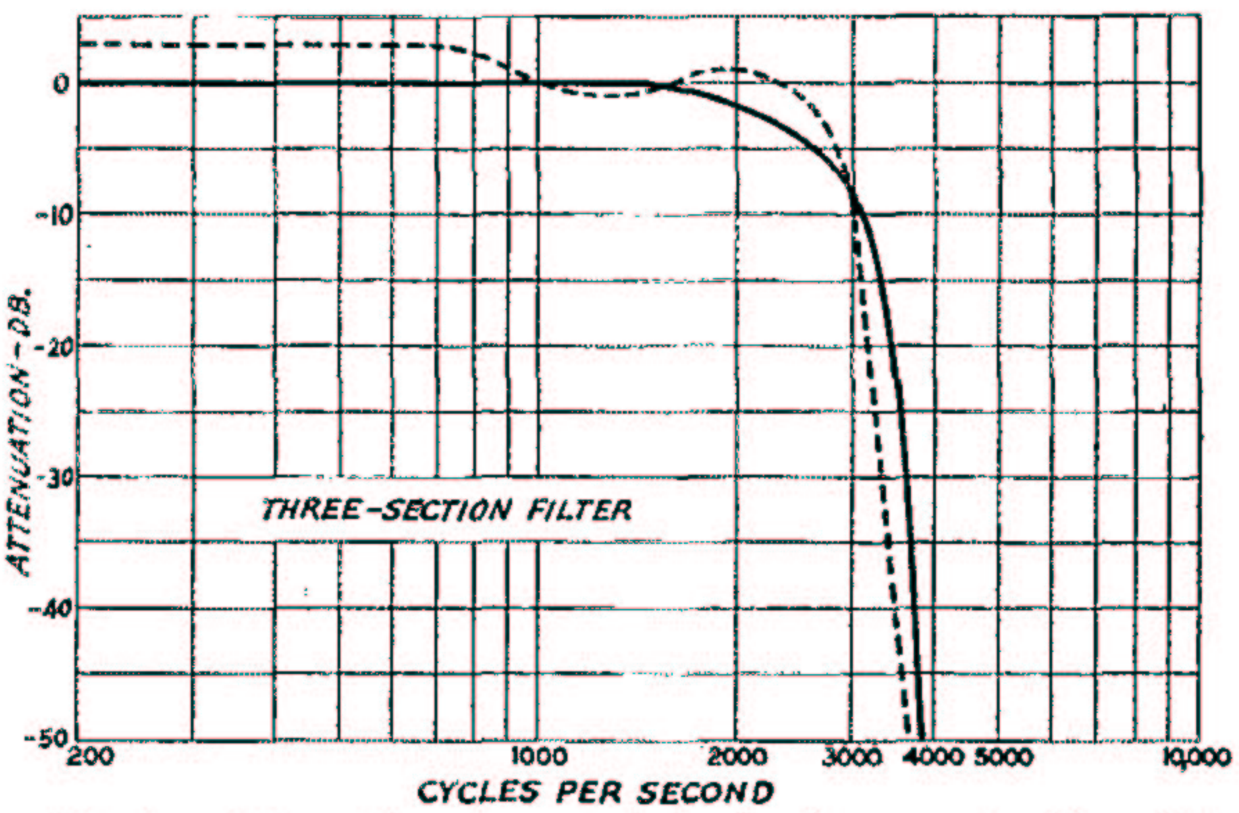

Fig. 4 — Attenuation characteristic of a three-section filter (Fig. 1D) using constants given in Table I. Measurement conditions same as in Fig. 2.

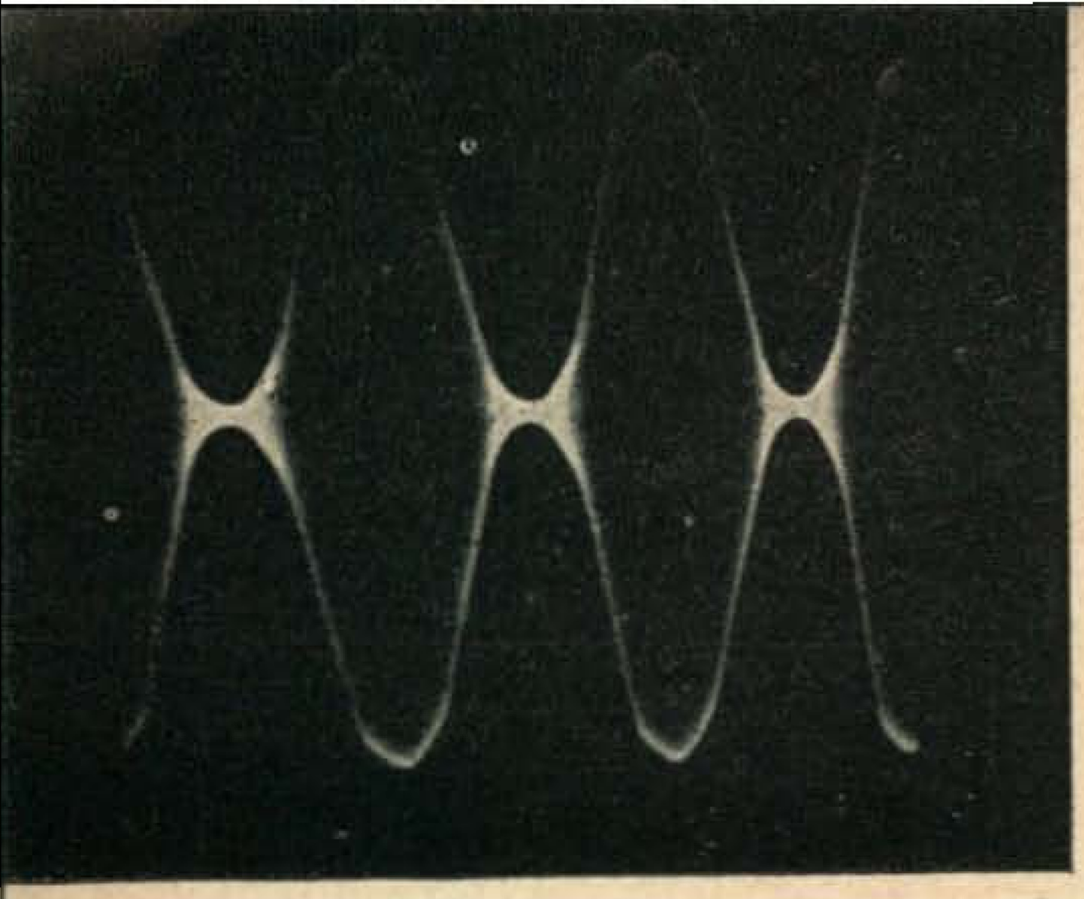

An r-f signal modulated approximately 100% by an unclipped 1000 cps audio signal.

Clipper and Filter

K. L. KLIPPEL, WØSQO*

AMATEUR RADIO PUBLICATIONS recently have carried a number of articles on speech clipping and filtering in an attempt to aid the amateur in obtaining higher average modulation level without an accompanying increase in signal bandwidth. While in general these articles are quite good, it is felt that a little more light on the subject should be shed, particularly with regard to the pitfalls and their unhappy results.

The advantages of clippers and filters are:

1) To raise average power supplied to the side bands.
2) To prevent overmodulation.
3) To reduce spurious sidebands beyond the bandwidth needed to convey intelligence.

These advantages can all be realized with correct design and application of the clipper and filter, but the mere use of them will not guarantee results. An attempt will be made to analyze the entire picture, using a small amount of mathematics, with the results shown graphically, where the problems become readily visible.

Let us assume that a speech amplifier is fed with a sine wave and heavy clipping follows. The waveforms will appear as shown in *Fig. 1*.

The resulting waveform is practically a square wave. Through mathematical means the square wave can be analyzed and when this is done it is seen that a square wave is a resultant wave of odd harmonics plus the fundamental. Fourier analysis shows the basic equation to be $f(x) = b_o + \frac{2}{\pi} sin\ x + \frac{2}{3\pi} sin\ 3x + \frac{2}{5\pi} sin\ 5x + \ldots \frac{2}{n\pi} sin\ nx$ where b_o is the average height of the wave, and x is the fundamental frequency.

It can then be seen that these odd harmonics, of which the square wave is comprised, decrease in amplitude as they get higher—the decrease being directly proportional to the order of the harmonic we select. That is to say that if we call the amplitude of the fundamental frequency 1, then the 3rd harmonic is 1/3 as large in amplitude as the fundamental, and the 5th harmonic is 1/5 as large and so on out to infinity. Since the amplitude of the higher order harmonics is so low, we will neglect their effect and in the following discussion will consider only the fundamental, 3rd, 5th, and 7th harmonics. The resultant waveforms shown in *Fig. 2* and *3* will be used as a basis for the following filter discussion.

These higher order harmonics, while down in amplitude, are still large enough to cause unwanted sidebands. For instance, the 7th harmonic (7000 cps), assuming 1000 cps fundamental, is 1/7 as large, or only 17 db down; whereas the 5th harmonic or 5000 cps, is only 14 db down from the fundamental. This, of course, cannot be tolerated, so some sort of filter must be used to attenuate all frequencies above, say 3000 cycles. This means, then, that all frequencies above 3000 cps modulating the carrier are reduced so as not to interfere. One of the simplest and best filter systems for the job is an "M" derived low-pass filter. It is advisable to use a two-section filter to do a good job and a three-section filter for an excellent job of filtering, but for this discussion we will consider a single section. Let us examine the waveforms then as they pass through the amplifier, clipper, and filter.

*Collins Radio Co., Cedar Rapids, Iowa,

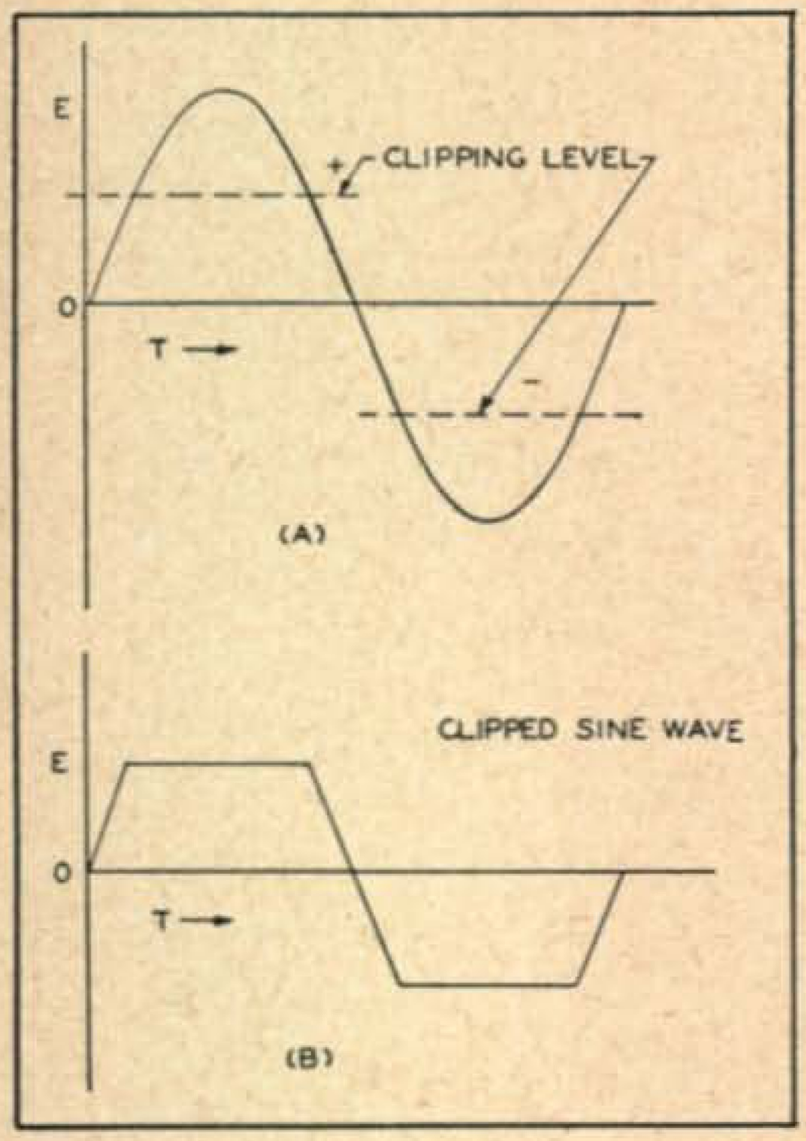

Fig. 1. Sine wave before and after heavy clipping.

Examining the Clipped Waveforms

The sine wave is amplified then clipped and filtered. To prevent overmodulation the clipper has been set so that the peak voltage after clipping shall be of such value as to cause the modulator to deliver sufficient audio power to modulate the carrier 100% and no more. While the peak power of the sine

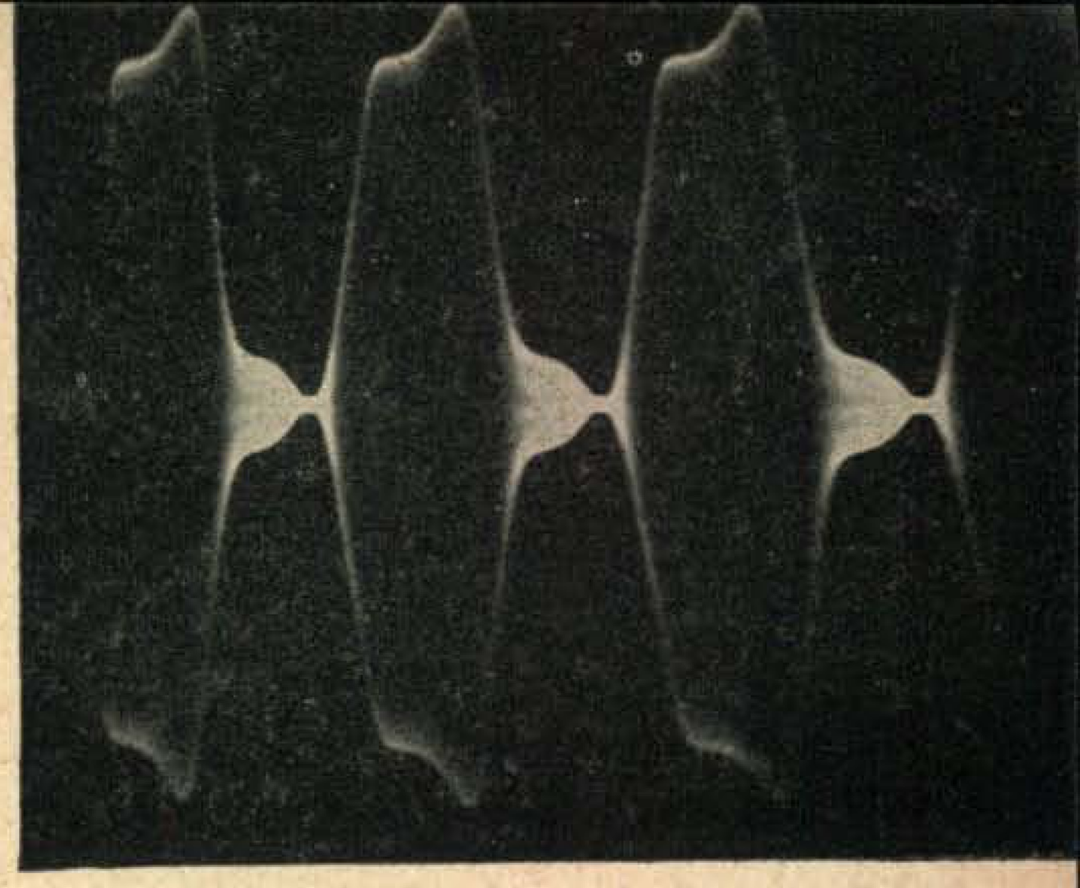

An r-f signal modulated approximately 100% by a 1000 cps audio signal that has been clipped 10-12 db.

Distortion Problems

A mathematical and graphical analysis of the advantages and disadvantages of speech clipping.

wave of the same maximum amplitude is the same as that of the squared wave, the average power of the square wave is much higher, resulting in higher average sideband power. This, of course, is the desired situation because the receiver detector is an power sensitive device.

Under the above conditions, overmodulation would be prevented if the waveform remained as shown in *Fig. 1b*. Unfortunately, such is not the case. The average power of the wave is decreased by going through the filter, and phase distortion can cause the peak amplitude to exceed the value needed for 100% modulation. The cause of these two things is not obvious but the following illustrations should help to explain what actually does happen and what to do about it.

First, the problem of varying average power will be discussed. Assuming a constant resistive load, average power, when discussing waveforms, can be considered to be directly proportional to the area under the waveform when presented graphically, so a comparison of two areas will show up power variations. The waveform shown in *Fig. 1b* is a clipped sine wave, being very nearly square, and has high average power. Now let us examine the waveform as it comes out of the filter. If we assume 400 cps as the fundamental frequency, then the fundamental, 3rd, 5th, and 7th harmonics lie within the pass band of the filter (0-3000 cps) and the waveform in the output will be quite square as shown in *Fig. 2*, thereby containing high average power. Now assuming 1000 cps as the fundamental frequency, we find that the only harmonic that falls within the pass band of the filter is the 3rd or 3000 cps, which is right at cut off, so assuming no phase distortion the output waveform will look as shown in *Fig. 3*.

It can readily be seen by comparison of areas under the two curves that the average power has been reduced considerably, so in practical language this means that the lower frequencies modulate the carrier to a higher average power than the higher audio frequencies beginning about 700 cps or so. This is inherent in the system.

It is good practice to use some sort of a high-pass filter, or smaller than normal audio coupling capacitors to attenuate the lower audio frequencies from 60–200 cps, because they add very little to the intelligibility.

Filter Distortion

A little-recognized source of trouble that can cause overmodulation is the phase distortion of the filter. In order to understand the problem it is necessary to evaluate the phase shift through the filter as functions of frequency and cut-off frequency.

If the phase shift changed at the same rate as the frequency, no phase distortion would appear. That is to say that if a 400 cps signal had 4 degrees of shift, and a 2000 cps had 20 degrees shift, phase distortion would not be present. Unfortunately, an "M" derived filter (or any filter arrangement that provides a sharp cut off) does not exhibit these characteristics. The phase shift varies, but not at a constant rate. As the frequency approaches cut off the phase shift begins to increase rapidly. The proof

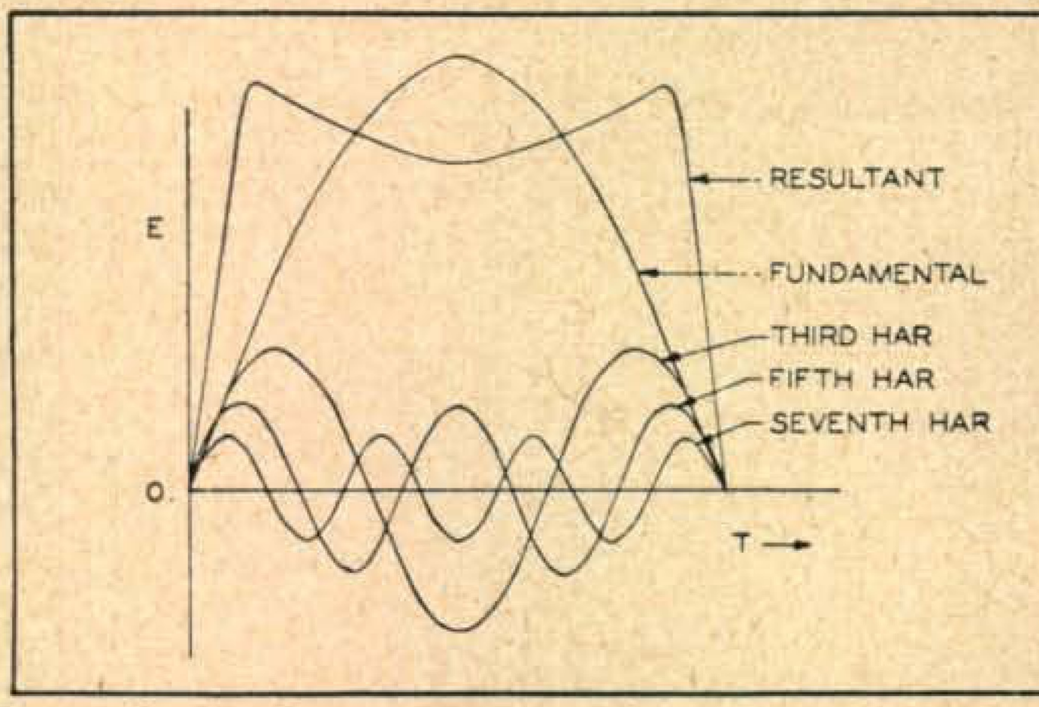

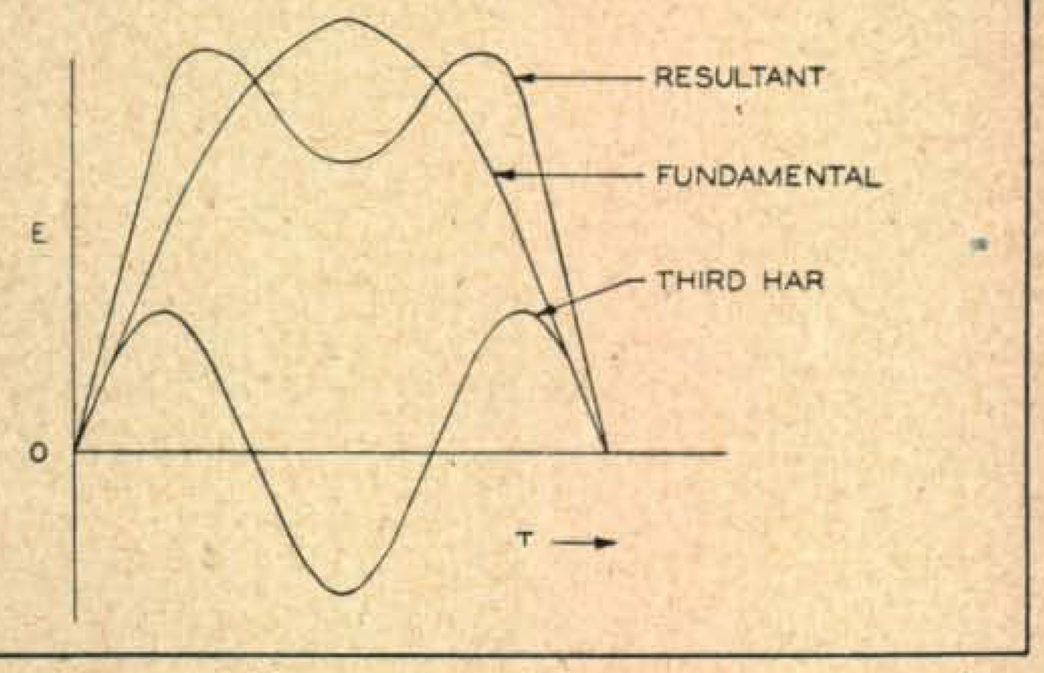

Fig. 2 (left). Square wave resulting from clipped sine wave results in odd harmonics of decreasing magnitude.
Fig. 3 (right). Waveform of Fig. 2 with the principal magnitude harmonics used as a basis for clipper and filter distortion problems.

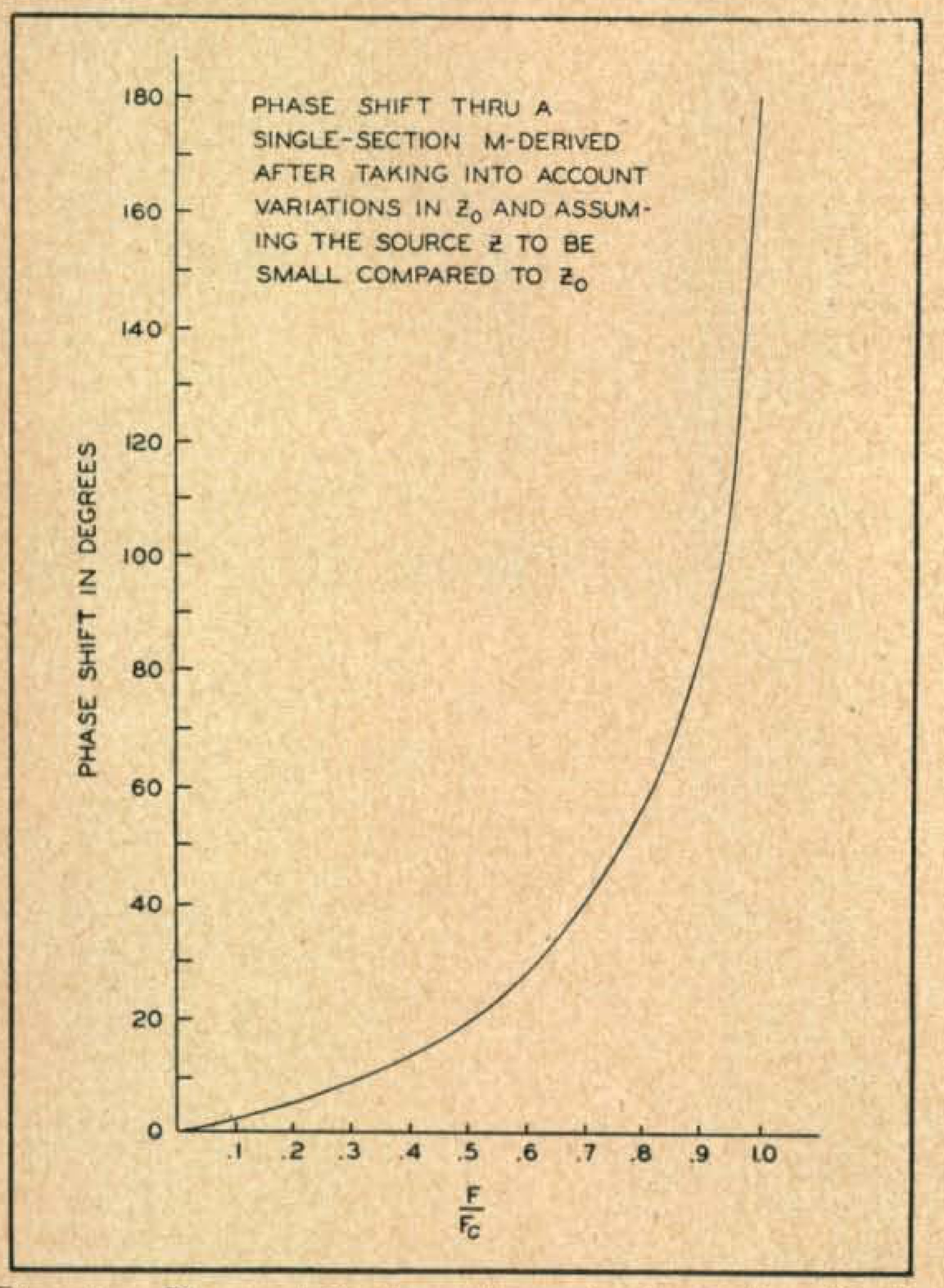

Fig. 4. Phase shift through a single-section "M" derived filter.

of this lies in the basic equation:

$$\theta = arc\ tan \frac{-\left(\frac{f_c}{f}\right) sin\ n\beta}{\sqrt{\left(\frac{f_c}{f}\right)^2 - 1}\left[(1 + cos\ n\ \beta)\right]}$$

where θ = the phase angle in degrees
f_c = cut-off frequency
f = test frequency
n = number of filter sections

$$M = \sqrt{1 - \left(\frac{f_c}{f_h}\right)^2}$$

where f_c = cut-off frequency
f_h = frequency of highest attenuation

$$\beta = arc\ tan \frac{2M\sqrt{\left(\frac{f_c}{f}\right)^2 - 1}}{M^2 + 1 - \left(\frac{f_c}{f}\right)^2}$$

The above expressions appear rather complicated, but anyone who can work algebra and use trig tables can solve them. The results of their solution for different values of frequency over the pass band of a single-section filter where "M" is equal to 0.5 (from $\frac{f}{f_c} = 0$ to $\frac{f}{f_c} = 1$) are shown graphically in *Fig. 4.*

It can be seen from the graph that the shift is fairly constant from $\frac{f}{f_c} = 0$ to $\frac{f}{f_c} = 0.5$ and from $\frac{f}{f_c} = 0.5$ to $\frac{f}{f_c} = 1.0$ the phase shift rate of change is very high. Perhaps the best way to present the results of this phase shift is to show it graphically. The filter under discussion will be assumed to have a cut-off frequency of 3000 cps. *Figure 5* shows the case where $\frac{f}{f_c}$ lies between 0.1 to 0.33 and where the phase shift is quite proportional to frequency. In this case the resultant waveform is symmetrical, and has a peak value approximately equal to the peak value of the fundamental, so no overmodula-

(*Continued on page 96*)

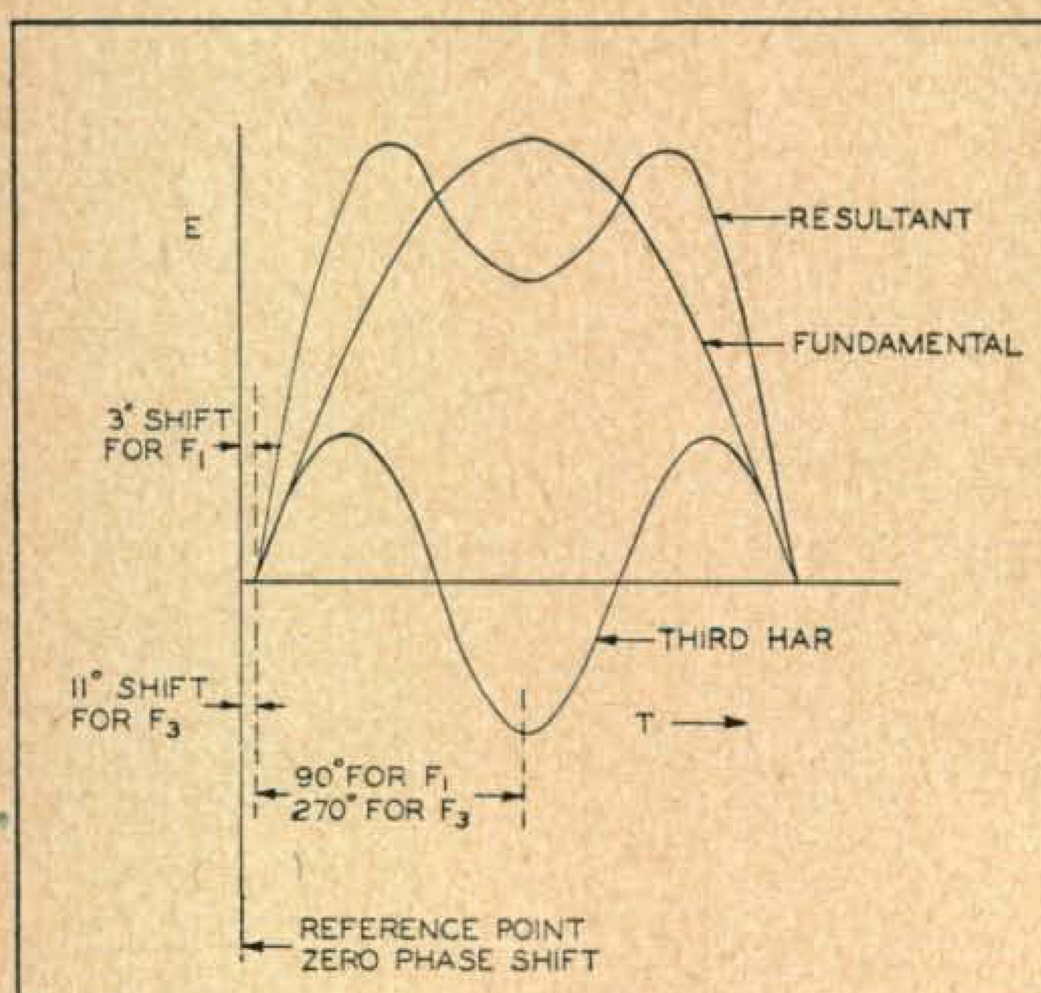

Fig. 5 (left). Phase shift produced by "M" derived filter with 3000 cps cut-off where F is 300.

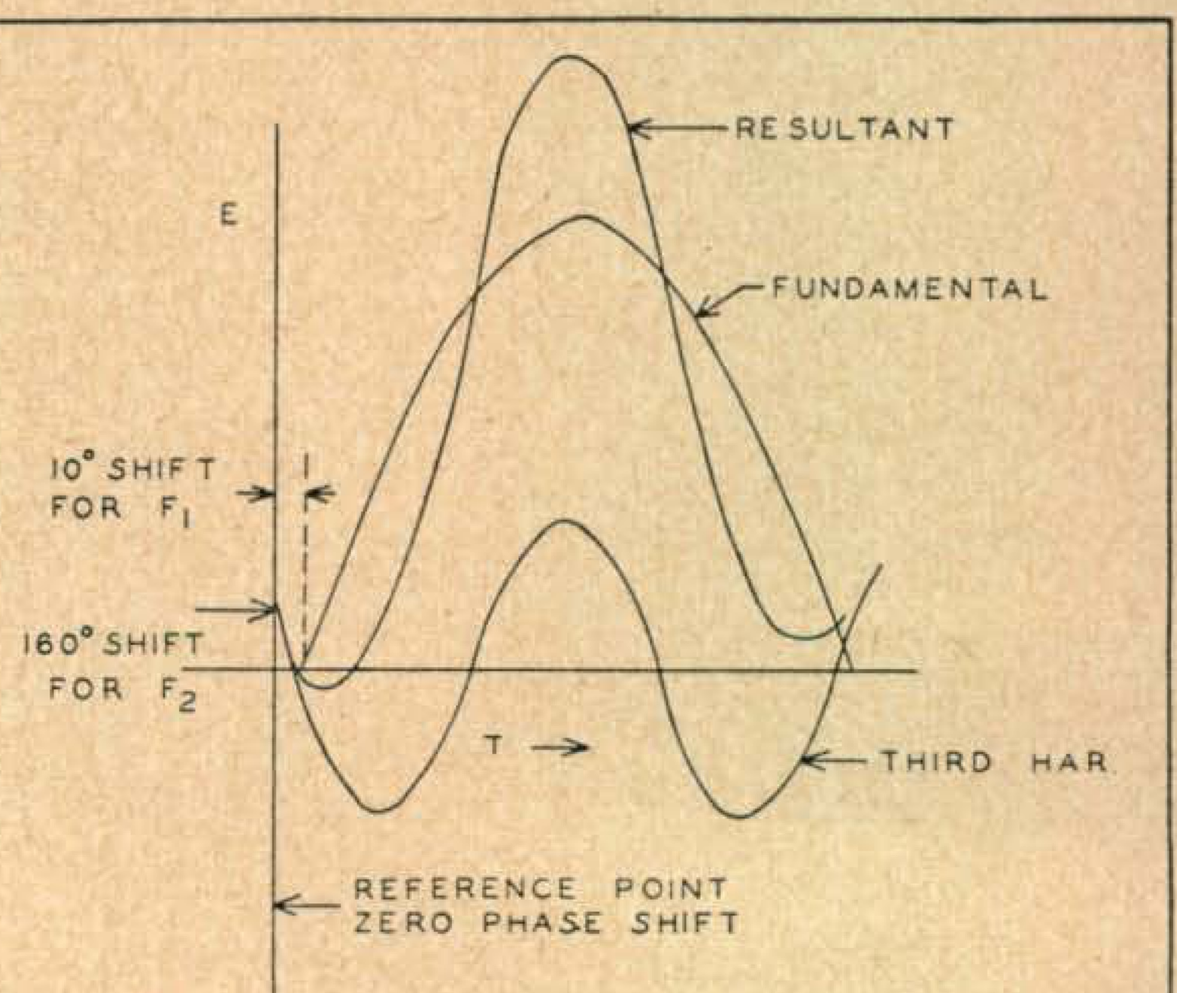

Fig. 6 (right). Phase shift produced by "M" derived filter with 3000 cps cut-off where F is 966.

RULES VII

Robert's Rules of Order, Rev' ed, shall be the final authority in resolving all disputed points in club procedure.

AMENDMENTS VIII

This constitution may be amended by a two-thirds vote of the membership. Proposed amendments shall be submitted in writing at a regular meeting, and voted on at the next regular meeting.

QUORUM I

51% of the members shall constitute a quorum.

CONSTITUTION and BY-LAWS II

The secretary/treasurer shall have custody of the constitution and by-laws, and shall note all amendments, additions and corrections thereto. He shall have them with him at all meetings, and shall permit them to be examined by members on request.

MEMBERSHIP III

Applications for membership shall be submitted in writing, with an initiation fee of , and each applicant shall signify his willingness to abide by the constitution and by-laws. Applications shall be investigated by the committee, and its recommendations reported at the next regular meeting. A two-thirds vote of a quorum shall be necessary to elect to membership.

DUES V

Membership dues shall be a year, payable in equal monthly payments. A 20% reduction is authorized on all dues paid a year in advance.

OFFICERS VI

Candidates for office shall be members in good standing, and shall be nominated by a nominating committee, or from the floor in the regular meeting immediately preceeding the regular meeting, when the elections are held. Officers begin their duties immediately upon election.

AMENDMENTS VIII

These by-laws may be amended by a two-thirds vote of a quorum. Proposals for amendments shall be submitted in writing at a regular meeting, and voted on at the next regular meeting.

ZERO BIAS

(*from page 15*)

field days outings for youngsters—there are a hundred things that could and should be done. Amateur radio needs new blood and too many youngsters never even heard of ham radio. Talks and demonstrations in front of local boy scout troops and in schools would be welcomed by their adult leaders.

At the end of the war figures on the number of prospective amateurs went up as high as a quarter million. The actual number today is closer to 100,000. The increases haven't measured up to expectations and it isn't because amateur radio has lost any of its glamour. The trouble is that lots of youngsters who might have entered the hobby were deprived of their contacts during the war. It's up to us to help them now. What we need is lots more teenagers raising the roof at hamfests and lots more 6L6s and 807s shuttling around on all bands. Let's get a breed of ham on the air that still considers trans-continental contacts big stuff, and we'll be doing our bit toward insuring the future of amateur radio.

DISTORTION PROBLEMS

(*from page 48*)

tion occurs. *Figure 6* shows the case where $f_{fundamental} = 966$ and $f_{3rd} = 2900$. At this value the phase shift for $f_{fund.} = 10°$ and for $f_{3rd} = 160°$. The resultant waveform shows quite clearly that the new peak amplitude considerably exceeds that of the fundamental—in this case the rise is 30%. Practically speaking then, this means that the voltage applied to the modulator grids will exceed, by

Mobile Operation NOW LEGAL* On All Amateur Bands!

Perhaps you're planning a mobile rig covering all bands—Maybe only 75- or 10/11. Depends on your interest and ambition. But whatever it is you're going to need CRYSTAL STABILITY + INSTANT QSY.

With your pet frequency in the center—one higher—one lower—You're mobile with a VALPEY XTALECTOR. No switches, no extra capacity, one socket on the panel (½" or ¾") plus an XTALECTOR on each band.

Tell us your center frequency ± 500 cycles and amount of QSY. Three CM5's (80-40) and XTALECTOR **$9.95.**

Valpey CRYSTALS

HOLLISTON, MASS.

W1ATP W1BZJ W1IVP W1PLX

* Effective July 15, 1948

B-A **EXCITING! EXCITER BARGAIN**

25 to 40 WATTS

10 to 80 METERS

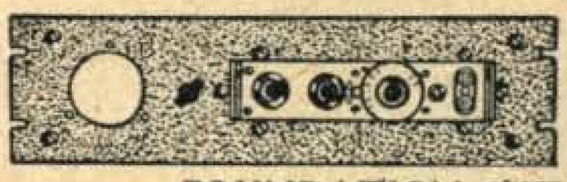

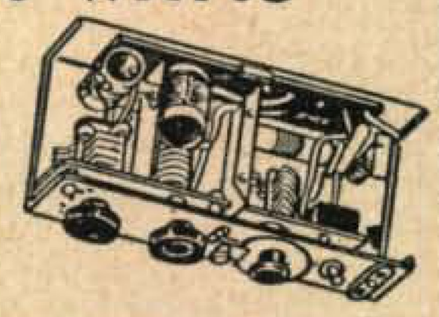

FOUNDATION KIT

Engineered around the BC-610 series of plug-in tuning units. Described in the 11th edition Radio Handbook. Completed exciter uses 6AG7 crystal or electron coupled ascillator, 6L6 buffer-doubler and 807 amplifier. Kit includes four tuning units (illustrated at right above with cover removed), special 5¼" aluminum relay rack panel, socket for plug-in units and special hardware, together with full instructions and diagrams for assembling complete exciter. **No. 31A28, FU-40 Foundation, SPECIAL..... $9.95**

PARTS KIT. Everything needed to complete exciter except tubes and power supply. Includes all mica condensers, resistors, RF chokes, sockets, meter switch, 0-200 ma meter, key jack, and miscellaneous parts. **No. 31A28A, SPECIAL Per Kit, Each..... $9.31**

WANT RG-58/U?

Use RG-29/U—exactly the same except clear plastic cover overall. We Have It!!

A BARGAIN—No. 3A105—20 Foot Coils, Each..... 49c

CONTINUOUS LENGTHS—50 ft. and over. **No. 2A169. SPECIAL PER FOOT..... 3½c**

DID YOU GET IT? THE BIG NEW B-A Catalog No. 481—EVERYTHING in Radio and Electronics. Write if you did not receive it. **FREE on request.**

B-A BURSTEIN-APPLEBEE Company
1012-14 McGEE STREET, KANSAS CITY 6, MISSOURI

Basic Scope or Television PS Kit

Item #1—Power & Fil Transformer—Brand New Fully enclosed. 3⅜ x 3½ x 3½. PRI-115 Volts-60 cycles. Sec.-2700 Volts R.M.S.-2 Mil. 6.3 Volts-.6 Amp. 2.5 Volts-1.75 Amp.....Each **$4.50**

Item #2—0.1-3000 Volts D.C.-Oil or 0.03-7500 Volts D.C.....Each **$1.10**

Item #3—Magnal Socket for C.R. Tube...Each **.50**

Item #4—Steatite Socket for 2 x 2.....Each **.35**

These items sold separately or as a Kit with schematic New and Guaranteed..... **$5.95**

GREENWICH SALES CO.

New Bulletin off press—write

59 CORTLANDT ST. NEW YORK 7, N. Y.

ROTARY BEAM CONTROL CABLE

8 CONDUCTORS: 2 #16, 6 #20 tinned, stranded copper; rubber insulated; color coded. WEATHERPROOF RUBBER JACKET. Overall braided tinned copper ARMOR SHIELD ½" O.D. NEW HIGH GRADE MATERIAL. Any length up to 400 ft. PRICE **10c**/ft. F.O.B. Chicago

Dealers: Write for quantity lot prices.

TRANS-WORLD RADIO-TELEVISION CORP.

6639 S. Aberdeen St. Chicago 21, Illinois

HAM HEADQUARTERS IN WESTCHESTER COUNTY

All Standard Lines of Parts, Tubes, Transmitters and Receivers carried in stock

Westchester Electronic Supply Co., Inc.

333 Mamaroneck Ave. White Plains, N. Y.

Tel. W.P. 9-5766 and W.P. 9-6930

RADIO

Technician and Radio Service Courses

FM and TELEVISION

American Radio Institute

101 West 63rd St., New York 23, N. Y.

Approved Under GI Bill of Rights

Licensed by New York State

ADDRESS CHANGES » » »

Subscribers to CQ should notify our Circulation Dept. at least 3 weeks in advance regarding any change in address. The Post Office Dept. does not forward magazines sent to a wrong address unless you pay additional postage. We cannot duplicate copies sent to your old address. Old and new addresses MUST be given.

CQ Circulation Dept.

RADIO MAGAZINES, Inc.

342 Madison Ave.

New York 17, N. Y.

30%, that necessary to modulate the carrier 100% and this overmodulation will result in spurious signals. Laboratory tests prove quite conclusively that the theory and practice agree very well.

Contrary to what many may think, the fact that speech rather than a sine wave will be transmitted does not appreciably change the picture. This is because the speech is clipped, and still presents a square wave to the filter. This square wave may be broken down, as shown, into sine wave components. Of course, the clipped speech wave varies rapidly in character because of the nature of speech, but an instantaneous examination will show the above conclusions to be fairly accurate.

Now that we are aware of the pitfalls that confront us, the next problem is to work out a simple practical solution. Perhaps the simplest and most reliable approach is as follows:

1) Connect an oscilloscope to the Class C output to examine the modulated r-f envelope.
2) Back off the speech clipper to render it ineffective.
3) Feed a low frequency a-f signal (around 300 cps) into the speech amplifier input.
4) With the final r-f amplifier operating at normal load, turn up the audio gain until about 80–85% modulation is indicated on the scope.
5) Advance clipping level control until it just begins to clip the peaks at this modulation level.
6) Turn up the a-f gain control so that the audio level at the clipper is about 10–12 db above the no-clipping level. This point can be determined by listening tests as 10/12 db is the point conceded to be about the maximum allowable before the speech distortion becomes objectionable to the ear.

By following the procedure outlined the signal emitted is sharp, clean, and of high average power.

The filter, being at low level, is generally followed by a driver transformer and a modulation transformer. A slight amount of phase distortion may result from the phase shift in the transformers, but with reasonable quality transformers, the phase distortion in the 200–3000 cps voice range is negligible.

After experimenting with low level and high level clipping systems, the author concludes that the average amateur possessing little test equipment is much better off to use the high level negative peak clipper followed by a splatter suppressor, such as that sold by Thordarson. This arrangement like the low level one, has some pitfalls, but that again is another story. What do we use at WØSQO? High level clipping, of course—I don't own a scope and hate mathematics.

CRYSTAL REACTANCE SYSTEM

(from page 38)

lator. *L*, in combination with *C11*, is the series reactive element, the trimmer condenser being included as a convenience in adjustment. The 90° voltage is developed across *R15* and is applied to the modulator grid by *C10*, a coupling capacitor, while *R10* is employed to isolate the r-f from the a-f component.

The unit is designed to plug directly into the crystal

Microphones, Construction and Use

The AM Hobbyist can make almost every part that could be wanted, except maybe Vacuum Tubes or Semiconductors, the making of which is a very devout and expensive hobby unto itself. Next in cost or difficulty are the transformers, resistors, and capacitors, Each also available for purchase at a lower cost and frustration level than through actually building them, although a percentage do wind their own power transformers and almost everyone makes their own RF coils.

However, the humble microphone, other than cast-off FM base station and CB radio mikes, salvaged carbon mikes from telephones, and the most abominable incarnation of all -the small speaker used in reverse as a microphone- is one of those simple but very expensive instruments that can be made at a savings in the home workshop, and these will give good performance if the instructions are understood and followed carefully.

As with any micropohone, speaker, or other means of converting one kind of energy into another, some form of equalization can be applied to broaden the flatness of the spectrum over which it is to be used. Of course in the case of microphones, the equalization consumes very litle extra power and adds little complexity, just a stage of amplification with some frequency-dependent negative feedback, whereas with other instruments requiring considerable power, such as speaker boxes and antennas, the laws of physics governing efficiency and spectrum coverage can be cruel.

There is no reason to assume that any of these designs really needs equalization; certainly the authors found them satisfactory without it. It is merely a suggestion, in case the first product of one's labors has a kink or two in it.

One thing is certain, there is no greater pleasure than saying, over the air, "I'm using a home made microphone", or "I made the mike myself out of...". - provided the signal going out is natural and clear. Making a microphone is not a job to be rushed or done in a filthy shop, but it is hoped that any reader of this volume has the patience of a cat and its fastidious habits as well.

Velocity Microphones

Practical Construction of Two Types That Are Easy to Make

RECENT commercial introduction of the velocity microphone (modern technical label for what we have known as plain "ribbon mike" in years past) has aroused considerable interest among amateur 'phone operators. And well it may, for in addition to having excellent performance characteristics this type of microphone is perhaps the easiest of all to build. Still better, it is adaptable to hand construction from the kind of parts that can be obtained for nothing or next to nothing. In the articles following, two of the brethren contribute the practical dope on how they built their pet versions.

The D.C. Field Type

By C. W. Melotte*

THE velocity (ribbon) microphone is simplicity itself, consisting of a very light piece of corrugated metal ribbon mounted between the poles of an electro-magnet. The ribbon is suspended loosely and with its faces parallel to the magnetic lines of force between the poles. A sound wave, which is made up of alternate rarefactions and condensations of the air, striking the surface of the ribbon causes it to move backward and forward. This movement of the ribbon causes it to cut the magnetic lines of force between the poles of the electro-magnet and a minute alternating voltage is induced in the ribbon. This signal voltage is fed through an input transformer to the grid of the first tube in the microphone amplifier. Since the movement of the ribbon corresponds to the rarefactions and condensations in the air, the alternating voltage produced is of the same frequency as the sound. Unlike most microphones, the velocity type delivers a voltage which is essentially independent of frequency and dependent only on the amplitude of the sound — and, hence, on the velocity of the ribbon. Therefore the name, "velocity microphone."

A small but powerful electro-magnet furnishes the magnetic field. Since the sensitivity of the microphone depends on the number of lines of force cut by the ribbon, the electro-magnet should be designed so that it will produce as great a magnetic flux as possible. Therefore the iron used should have high permeability.

THE CONSTRUCTION

Get the best grade of electrical iron obtainable in your locality. Annealed cast steel having high permeability was used for the magnet of the microphone built here, and it is very sensitive. The coil consists of 400 turns of No. 24 d.c.c. magnet wire wound in layers, with the finished winding given a coat of shellac or Duco. The magnet is assembled as shown in Fig. 2, assuming that the parts have been cut, drilled and tapped as specified. The drawing should be self-explanatory.

Next the ribbon should be made. The material should preferably be duralumin, although brass

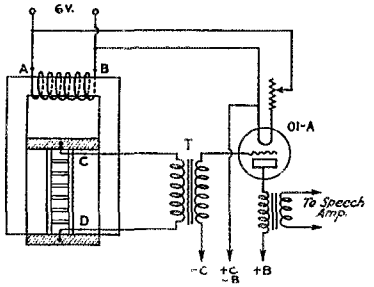

FIG. 1 — CIRCUIT CONNECTIONS FOR THE D.C FIELD TYPE MICROPHONE

can be substituted. From stock one-half mil thick cut a piece 3/16-inch wide and 3 inches long. Corrugate it by running it through a set of coarse gears. This corrugation is to prevent standing waves on the surface of the ribbon and to keep the natural frequency of the ribbon out of the frequency range normally used. The ribbon is now supported without tension by the insulating strips shown in the drawing, being slipped into the saw cut in the strips and clamped with the bolts which also act as terminals. The ribbon and the two insulating strips are now assembled between the poles of the electro-magnet and the air-gap on each side made as small as possible, without allowing the ribbon to touch the pole pieces, by sliding the poles together. When the adjustment is complete, clamp the pole pieces to the yoke by the clamping bolts, tighten the four bolts holding the insulating pieces securely — and the microphone is completed.

Because the ribbon is short the impedance is low. To match this low impedance to the high impedance of the grid of the amplifier tube it is necessary to use a step-up input transformer. A suitable transformer can be made easily by removing the primary winding from an audio transformer and substituting a low-impedance winding (10 turns or so) to match the impedance of the ribbon. Such a transformer will enable you

*Melotte Radio Service, North Lawrence, New York.

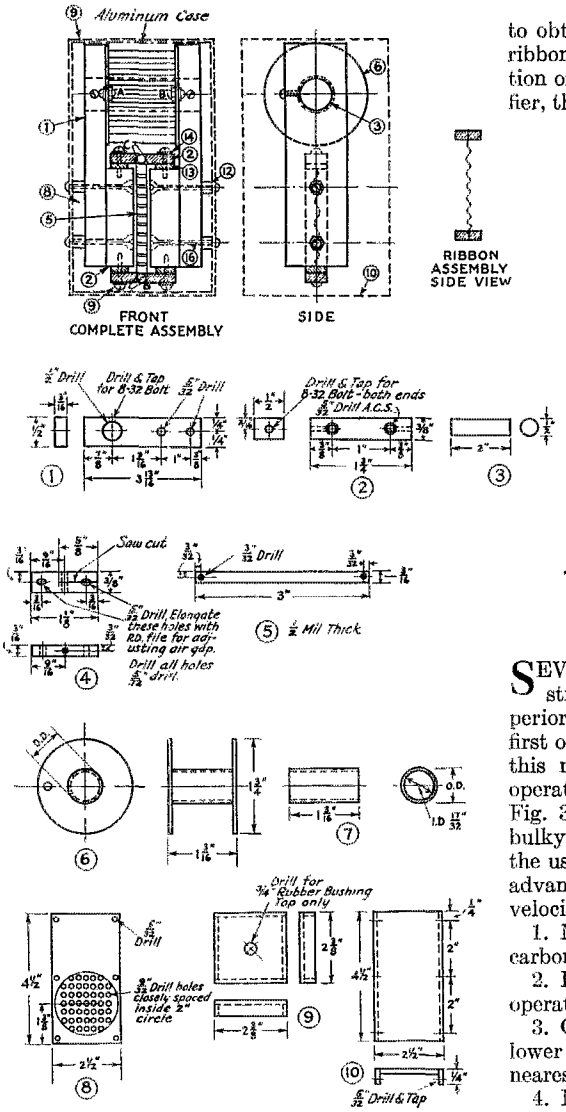

FIG. 2. — DETAIL OF THE D.C. FIELD VELOCITY MICROPHONE CONSTRUCTION

1 — 2 pole pieces of magnetic iron or steel.
2 — 2 pole faces of magnetic iron or steel.
3 — 1 yoke, magnetic iron or steel.
4 — 2 pieces bakelite for ribbon support.
5 — 1 Dural ribbon.
6 — 2 cardboard or fiber ends for winding form.
7 — 1 cardboard or fiber core for winding form.
8 — 2 pieces of aluminum for back and front of case.
9 — 2 pieces of aluminum for top and bottom of case.
10 — 2 pieces of aluminum for ends of case.
11 — ¼ lb. No. 24 d.c.c. magnet wire.
12 — 4 brass bosses.
13 — 4 fiber washers.
14 — 4 brass washers.
15 — 8 round-head brass bolts, 8-32 ½-inch long.
16 — 4 flat-head brass bolts, 8-32 1-inch long.
17 — 2 round-head brass bolts, 8-32 ⅜-inch long.
18 — 2 round-head steel bolts, 8-32 ⅜-inch long.
Also required: 14 brass nuts for 8-32 screws; 16 lock washers for 8-32 screws; 4 tinned copper terminals; ½ pint black Duco.

to obtain maximum transfer of energy from the ribbon to the amplifier. Fig. 1 shows the connection of the microphone to the microphone amplifier, the output of which can be fed into any good two-stage amplifier.

The frequency response of the velocity microphone is exceptionally good and this type is also directional, no sound being picked up from the sides. It is as good as a condenser microphone and better than a carbon microphone — and much easier to build than either, since no precision machining is necessary. However, care should be taken that the pole faces are parallel, that the air-gap is as small as possible and that the ribbon does not strike the pole faces as it vibrates. After assembly in the aluminum case it presents an appearance of which any builder can well be proud.

The Permanent Magnet Type

By George A. Elliot, W9ADZ*

SEVERAL ribbon type microphones constructed here have proven themselves superior to other types in a number of respects. The first one made had a six-volt field coil but, since this necessitated a 6-volt storage battery for operation, the permanent magnet type shown in Fig. 3 was developed. This is somewhat more bulky than the other, but still is not so large as the usual condenser head with its amplifier. The advantages of the permanent magnet type velocity microphone are as follows:

1. No background hiss like that common to carbon mikes of any type.

2. Ruggedness. This one has fallen off the operating table without damage.

3. Considerably higher output level and much lower impedance than the condenser type, its nearest rival in quality of performance.

4. No batteries required to supply field — or anything else.

5. It is directional. Room noise or echo coming from the sides does no damage.

6. Having no diaphragm, it is free from the usual frequency peaks in response.

The no-background feature is important because it permits running the level up further, obviating the necessity of talking close to the mike. This is helpful when an inexperienced talker is performing for monitoring purposes and in pick-up work. The feature of ruggedness is especially valuable in amateur work. A ham mike must stand the gaff — and then some. This type lacks the common fragility of stretched diaphragm types, including the dynamic.

*5671 Lake Drive, East St. Louis, Ill.

The relatively high output level obtained and the low characteristic impedance eliminate the necessity of having the first stage of amplification right at the microphone, as is necessary with the condenser type. Using a coupling transformer of

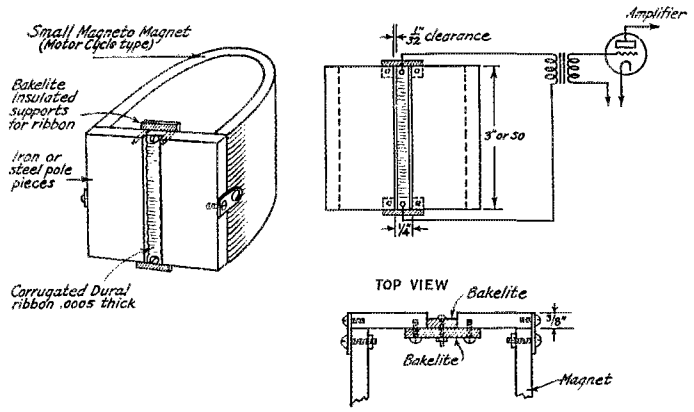

FIG. 3 — SUGGESTED CONSTRUCTION FOR THE PERMANENT-MAGNET TYPE VELOCITY MICROPHONE

There is nothing very critical about it. The magnet is of the type used in ignition magnetos, the motorcycle type being suitable. These can be picked up in junk yards and re-magnetized at a repair shop if necessary. The pole pieces should be suited to the magnet procurable. If dural cannot be had for the ribbon, a "stiff" type of tin or aluminum foil can be used. The corrugation is necessary to prevent resonance. The ribbon should be suspended loosely and not stretched.

500-ohm output impedance, the leads to the amplifier can be as long as 30 feet without appreciable loss. The output level is between that of a condenser head and that of a low-level double-button carbon mike. But the ratio of speech level to background is much better than with the carbon type, so there is an actual gain over the latter. The no-battery feature is a real drawing card for the ham who shies at the high polarizing voltage required for the condenser and the usual battery demanded by the carbon type. There are never enough batteries in any ham's shack.

The frequency characteristic of the velocity microphone is comparable to that of the condenser type, dropping uniformly towards the higher frequencies but being free from the usual humps. This one is flat to about 3000 cycles. Its output at higher frequencies could be equalized by compensation in an audio stage if such response should seem desirable. However, everything over 3000 cycles is so much wasted in voice communication and most of the useless noise components are in the higher frequencies.

The low impedance of the ribbon calls for a few turns of large wire on the primary of the coupling transformer, 10 turns of No. 18 being about right. If the microphone is to couple into the grid of the first amplifier through a short line, the transformer can be right at the grid of the tube. In this case, the 10-turn primary can be put on in place of the usual primary of the first audio transformer. If the microphone is to be removed some distance from the amplifier, a mike-to-line transformer should be used at the input end and a line-to-amplifier transformer at the output end. The input transformer can have the same 10-turn primary as the transformer just described and a secondary of about 500 turns of No. 30. The output transformer can be the usual amplifier input transformer with a 500-turn winding of No. 30 replacing its high-impedance primary. It should be unnecessary to mention that usual good practice in shielding microphone leads and grounding the shield ought to be observed.

Results Consistent DX QSO Contest

JUNE 5–18, 1932, was the period set aside for this new type of DX Contest. The point was to see which stations could roll up the greatest "total mileage" for their "20 best DX QSO's" during the allotted 14 days. 'Phone and c.w. stations alike, operating in the 1.7-, 3.5- and/or 7-mc. bands, were eligible to enter. However, each 20 contacts entered had to be in the same band and with the same type of transmission (c.w. or 'phone).

Entries were classified by frequency band and power used, there being three power groups, rated according to plate input to the last stage: Low Power, 50 watts or less; Medium Power, over 50 watts to and including 250 watts; High Power, over 250 watts.

A quantity of quartz crystals were donated by the staff at W8YA, the station of the Department of Electrical Engineering, the Pennsylvania State College, to be distributed among the several power groups as nearly as possible in proportion to the number of entries in each band falling in each power group. Ten crystals are being awarded to the highest 3.5-mc. participants, and ten to the highest 7-mc. participants. Due to the small number of participants on 1.7 mc., but three crystals are awarded the entrants using that band. The calls of the "crystal winners" are shown in italics in the score list.

In the case of the 1.7- and 3.5-mc. bands where there are both 'phone and c.w. entries, several of the final scores ("total mileage") have been modified by a correction factor (see June '32 *QST*) to

(Continued on page 80)

steady, but its indications are difficult to interpret. What we want is a simple gadget that will show us just what is happening to the carrier itself. We want a meter that interprets things directly in terms of average values. And we have it in the ordinary linear rectifier.

The most linear of so-called linear rectifiers that we know of is the self-biased type plate detector that has a resistor in the cathode circuit. It's the same type of rectifier as that used in the linear vacuum-tube voltmeter described by McLaughlin in May, 1932, *QST*. Look at the curves of that article and see how linear it is. The secret of its usefulness for our purpose is that the plate current is directly proportional to the *average* value of the a.c. (r.f.) input to the grid. In other words, as long as the average value of the input signal is constant, there is no change in plate current. If the average shifts upward, the plate current increases. If it shifts downward, the plate current also kicks downward. All we have to do is hook the thing up with a d.c. milliammeter of suitable range in the plate circuit and it becomes our modulation monitor. It is just the thing for listening monitor use, also.

The self-explanatory circuit of the one we have been using is shown in Fig. 1. It is essentially a one-tube receiver using a non-regenerative detector or, if you please, an r.f. vacuum-tube voltmeter. Take your choice. The resistor R_3 is not absolutely necessary but makes it possible to set the minimum bias so that nearly the full characteristic of the tube can be utilized. It is adjusted so that the tube draws almost zero current with no signal on the grid.

The best pace for the monitor is right on the operating table, where it can be seen by the operator, and shielded leads may be used to connect a coupling turn at the transmitter's output circuit to the monitor input. The coupling at the transmitter end and the resistor R_1 are then adjusted so that the milliammeter reads about 4/10 ma., assuming a plate voltage of over 180. The circuit L_1C_1 should not be detuned from resonance.

After that it's just a matter of talk and watch the meter. When it shows a tendency to kick upward, overmodulation in that direction is taking place and the gain control simply should be backed off. But if it should kick downward, then something is seriously wrong with the transmitter adjustment and a check-up is called for. If the output stage is a modulated Class C one, it may be just a case of insufficient Class C stage excitation, overloaded modulator (excessive Class C stage plate current) or too much modulator bias. If there is a Class B linear stage, downward modulation may call for reduction of the excitation coupling to that stage — and so on, as per instructions in the *Handbook* and numerous *QST* articles that have dealt with 'phone transmitter adjustment.

Active 'phone men who are working for improvement in the conditions on the 'phone bands are urged to make use of this simple monitor and talk it up over the air. There's a lot to be done.

World's Fair—Chicago, 1933

THE World's Fair Radio Amateur Council, the body in charge of amateur radio activities at the World's Fair, announces that the calls W9USA and W9USB have been assigned to the stations to be located in the Administration Building on the Fair Grounds. There will be four transmitters in operation and two receiving positions (with latest s.s. receivers). A club room will be available for visiting amateurs. Historical displays of amateur equipment will be one of the features of the exhibit in the Travel and Transport Building. All in all the Radio Amateur Council will have charge of 2000 square feet of floor space. W9USA got on the air in early March. The Communications Committee of the Council has charge of all operating, and only the finest operators in the Chicago area will be on duty. Reports on the progress of the amateur radio arrangements at the Fair are being transmitted regularly by specially appointed amateur stations throughout the U. S. and Canada. A special QSL card of attractive design will be sent to every station worked. It is hoped that twenty-four-hour operation can be maintained and that schedules may be kept with at least one station in each state. Watch out for W9USA and W9USB — World's Fair — 1933.

Dakota Division Convention

April 21st–22nd, Oxford Ball Room, St. Paul, Minn.

Under the auspices of St. Paul Radio Club. For particulars write Rex L. Munger, 2484 University St., St. Paul, Minn.

Velocity Microphone Correction

The drawing of the d.c. field type velocity microphone, Fig. 2, page 24, February *QST*, has occasioned some confusion among constructors because the overall width and thickness dimensions of the pole pieces (1) were incorrectly shown. These dimensions should be doubled; i.e., the pole pieces should be one inch wide and $\frac{3}{8}$-inch thick. This becomes apparent when the drawing is checked, because each pole piece must have a half-inch hole drilled in it to take the yoke (3), and because the ends of the yoke would project beyond the pole pieces if the latter are only 3/16-inch thick.

A Home-Built Velocity Microphone

Constructional Details of a Unit Built from Magneto Parts

By Norman E. Gibbs, W1JXP*

RIBBON microphones have always appealed to the writer because of their simplicity, ruggedness, and good frequency response. Construction of most types of ribbon microphones is quite simple. In essence the microphone consists of a metallic ribbon suspended between the poles of a magnet. Sound waves by their pressure cause the ribbon to move. It thus becomes a tiny generator, since it is a conductor moving in a magnetic field.

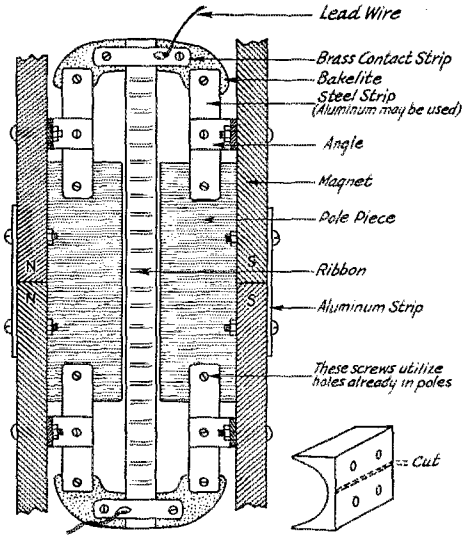

FIG. 1—VELOCITY MICROPHONE CONSTRUCTION DETAILS
Dimensions will depend upon the magneto parts used.

The assemblies to be described were made as a result of an unhappy experience with a commercial velocity microphone purchased for use with a 'phone transmitter. The response was very poor and the hum level most annoying. Compared with other types it was a dismal failure. With the feeling that matters could not be made much worse the "mike" was pulled apart, the general idea being to see if the ribbon were correctly centered or if some reason could not be found for the poor operation.

The ribbon in question seemed rather lifeless and apparently was made of foil containing at least some lead as it was quite soft. A new one might effect a cure, so our experiments began at that point. The new ribbon made a new microphone out of the apparent "dud," but still the pickup was not as much as competing makes afforded. The idea of making an attempt at home construction became most attractive.

At the start several demands must be recognized:

1. The expense of construction must be low.
2. Only ordinary tools found in the usual home shop should be required.
3. The proper material must be utilized or success is nearly impossible. By proper materials of course is meant high-quality magnets, high-permeability steel for the pole pieces, and a foil from which to cut the ribbons which possesses proper mechanical and electrical characteristics.

SELECTING RIBBON FOIL

In the hunt for suitable foil for the ribbons, all sorts of metal sheet and foil were inspected. A good source which yields a surprising variety is blown filter and by-pass condensers (paper type). The following properties are demanded:

1. Lightness—a suitable foil is from one-third to three-quarters of a thousandth thick. Usually the thinner ribbons are more sensitive as there is less force required to move their lighter bulk—provided, of course, they possess the quality of elasticity.

2. Elasticity—springiness. Suitable foil makes a tinkling noise when a strip of it is waved with the hand. The noise is distinctly metallic and usually a foil giving this noise will have good tensile strength. A lead foil will not have the proper springiness, but may stretch if put under slight strain. A good foil, if slightly wrinkled, can be stretched in the same manner as a coil spring, provided the stretching is not too violent.

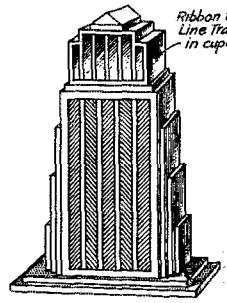

FIG. 2—SKETCH OF THE MICROPHONE CASE
It is made of wood, as described in the text.

3. High conductivity—a bright surface means good conductivity. Tin foil possesses this as well as the other properties. Aluminum foil is

* Old Lyme, Conn.

covered with a transparent coat of aluminum oxide which prevents good electrical contact. This oxide, by the way, causes the difficulties experienced in attempts to solder aluminum, as it forms almost instantaneously.

All in all, that "tinkle" sound is the best rule of thumb to use in judging material. Such foil keeps its bright surface, is easy to provide with proper contacts, and its springiness means lively response in the "mike."

As a start it was assumed that, within limits, the better and stronger the magnets used the better would be the results. Also it was assumed that the material to be used for the pole pieces would have to be of high magnetic permeability. Obviously the cost of having steel pole pieces machined to order from a high-grade cobalt steel was out of the question.

At hand were two defunct marine magnetos; the magnets and pole pieces were obtained from these.[1] The poles are especially adaptable to our purpose and are of high-permeability steel anyway. Only a hack saw, emery wheel, hand drill, soldering iron, and the other usual and miscellaneous tools were at hand, nor are special tools required. The emery wheel is a necessity.

The following description of the steps taken in construction, together with the sketches and photographs, should give sufficient detail to enable any mechanically inclined person to build a presentable microphone.

MECHANICAL CONSTRUCTION

The magnetos are torn down, care being taken to keep all the machine screws. If desired your

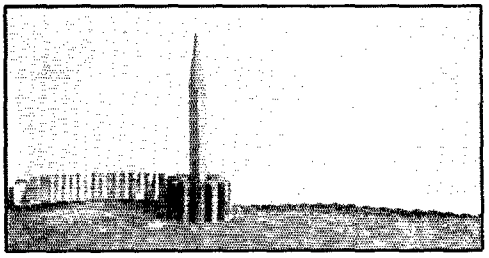

RIBBON AND CRIMPING TOOL

The tool is a small gear with a pencil stub as a handle. The crimping is done on a piece of soft felt.

local garage and ignition shop can boost the strength of your magnets by placing them in the field of a very strong electromagnet. In assembling the magnets to form an elongated oval be careful to place similar poles together so that the

[1] Almost any good-sized garage where electrical repair work is done should provide at least a source of information for tracking down a defunct magneto. There is no reason why types of magnetos other than marine could not be used as effectively. As to cost, the probability is that the price of old "mags" will be quite nominal and the entire unit can be built for less than $10. If the magneto is picked up for a song, $5 should suffice.

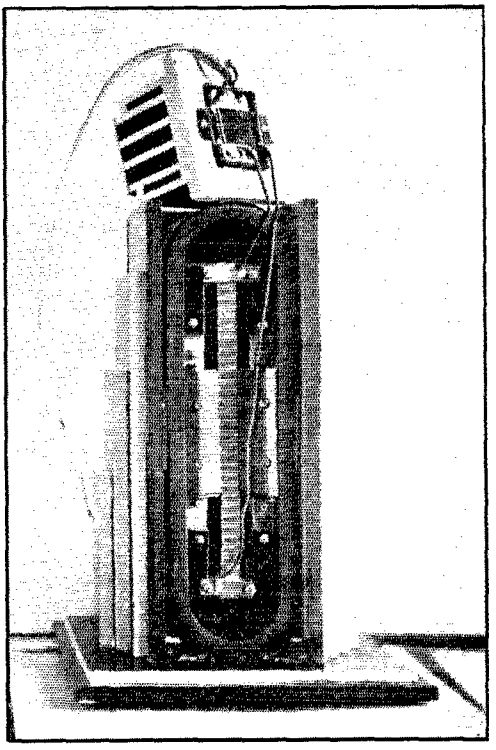

ASSEMBLED IN THE CASE, WITH THE FRONT GRILLE REMOVED

Note the ribbon-to-line transformer in the "penthouse."

magnets tend to oppose one another. If your magnets tend to draw together you have them in the wrong position. In proper position we have a flat oval magnet with the poles at the junction (on each side) of the assembly. An aluminum strip is used to fasten the magnets together, the holes used being those already drilled for us.

We are now ready to prepare the pole pieces. Fortunately the poles are shaped down to a narrow edge, ideal for our purpose. Our task is to cut one of the magneto poles in half to furnish a pair for the microphone. This is accomplished with the emery wheel. With care a straight and fairly narrow cut can be made. The edges of the pieces should be ground as perfectly straight as possible so that when they are mounted the ribbon slot will have straight sides and not be wider at one end. The sketch shows where the cut is made.

Forming the pole and ribbon assembly is best explained by the drawings and photographs. A number of pieces of strip steel of the type used to bind the cores of b.c.l. power transformers, or strip brass or aluminum, together with angles of the same material, provide means for fastening the assembly rigidly. In the models built by the writer the clearance between the pole pieces was

(Continued on page 78)

Made by the men who build Commercial Communications Equipment...

THIS RCA AMATEUR TRANSMITTER IS A TOP-NOTCH VALUE

The Model ACT-150 is a top-notch performer at a price that shouts value! Made by the same skilled RCA engineers who create commercial communications equipment, it offers features that *prove* its quality ... features born of RCA's experience and research in every phase of radio! Look them over — see for yourself.

FEATURES

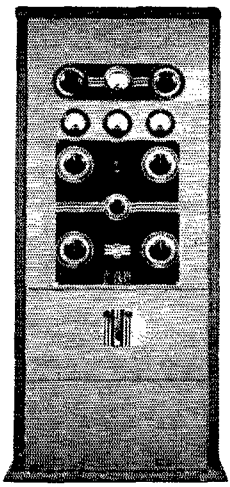

Conservative 150 watts output (c.w. and 'phone).

Tube line up of modern acclaim: R.F.—RCA 807, 802, two 807's, two 808's; Audio—RCA 6J7, two 6C5's, two 2A3's, two 808's; Rectifiers — RCA 83, 5Z3, 80, two 866's.

Isolated speech amplifier of special design.

10 to 160 meter operation.

Circuits fully metered including modulation indicator.

Switch for "Tune-up" protection or power output reduction.

Transformers given special impregnation.

Interlock switch for safety to operator.

Neutralized at factory.

Pleasing two-tone gray finish and handsome escutcheon plates on cabinets.

Low tube and extra coil costs.

MODEL ACT-150

Amateur's net price F.O.B. factory with speech amplifier and one set of coils but less tubes, microphone, crystal. Extra set of coils $13.50 **$625**

For maximum performance at minimum cost — use RCA Radio Tubes.

RCA presents the "Magic Key" every Sunday, 2 to 3 P. M., E.S.T., on the NBC Blue Network

RCA

FOR

AMATEUR RADIO

AMATEUR RADIO SECTION

A Service of the Radio Corporation of America

RCA Manufacturing Company, Inc., Camden, N. J.

hams cannot all apply laboratory methods to hook those elusive DX stations. So the added control is suggested as a means of balancing up the unknown quantities with another one. It is offered up to the tender mercies of the set builders, to be modified, moved thither and yon, replaced by double variable condensers or tapped coils, and changed into a link circuit, or Colpitts feed-back. Variations which we have tried all seemed to have possibilities.

For application to the front end of a superhet, the feed-back compensator should be helpful in removing erratic action, whether deliberate regeneration is used or not. Perhaps combined control of the feed-backs in both r.f. and detector circuits can be developed to the point of being reasonably fool-proof. Certainly the first circuits in a superhet are subjected to most of the conditions affecting the simple circuit discussed here.

Acknowledgment is due and offered to anyone whose circuit design, textbook, handbook or magazine article may have suggested some part of the "feed-back compensator." Certainly, H. S. Black's contribution of the "Stabilized Feedback Amplifier" was largely responsible.

Homebuilt Velocity Microphone

(Continued from page 33)

approximately one-half inch and the ribbon so cut as to leave approximately a sixteenth inch or less spacing on each side.

The bakelite pieces at the ends support the ribbon and are drilled to accommodate the machine screws holding the brass clamps which provide contact with the ribbon. These clamps are so bent that the ends are turned up, thus putting strong pressure upon the ribbon. A very important point is to be sure to use only well-polished brass for these contacts. If the brass is lacquered, be sure to remove the lacquer with fine sandpaper. The use of aluminum or other metals —aluminum especially—will result in poor response and low sensitivity because of contact resistance.

FORMING THE RIBBON

The task of cutting the ribbon demands a little patience, and you must expect to gouge and rip a few trial ribbons until you acquire the right touch. A half-microfarad condenser will furnish plenty of material for a great many attempts.

Place a foot-long strip of the foil upon a piece of flat and rather heavy cardboard. If there are any wrinkles, smooth them out with light, long strokes of the fingers. Place a straight edge—a brass-edged rule is ideal—over the foil so as to leave the desired width of ribbon. Press the straight edge down firmly so that the ribbon will not slip and with a steady, slow motion draw a razor blade along the straight edge. Practice on a few odd pieces will give you the knack and let

(Continued on page 76)

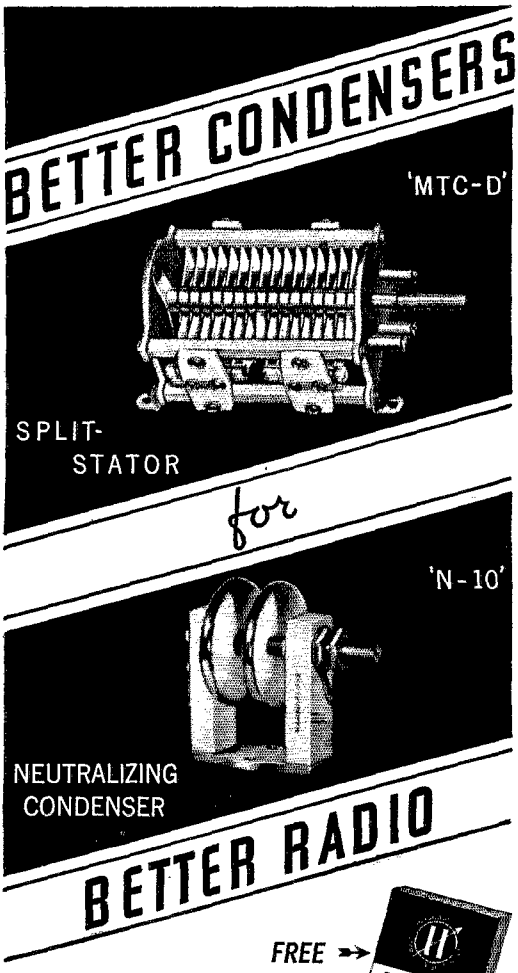

FREE

THESE two precision products by Hammarlund are intended for medium-power transmitters of compact design. The "MTCD" is built for universal mounting and is available in capacities ranging from 20 to 265 mmf. with voltage ratings of from 1000 to 5500. — The "N-10" is an ideal companion to the "MTCD." It is compact, rugged, and has a capacity range of 2 to 10 mmf. Both items are Isolantite insulated.

Mail Coupon!

HAMMARLUND MFG. CO., INC. Q-3-38
424-438 W. 33d St., N. Y. City.

☐ Please send me new "38" catalog.

Name.....

Address.....

City.....State.....

HAMMARLUND

Homebuilt Velocity Microphone

(Continued from page 72)

you determine for yourself how much pressure to use so that the ribbon will cut rather than tear. Cut the ribbon at least a couple of inches longer than necessary.

Assuming that you have cut a ribbon of desirable width, i.e., about $\frac{1}{16}$ inch narrower than the ribbon slot, the next problem is to put a crimp in it. This wrinkles the ribbon slightly and gives

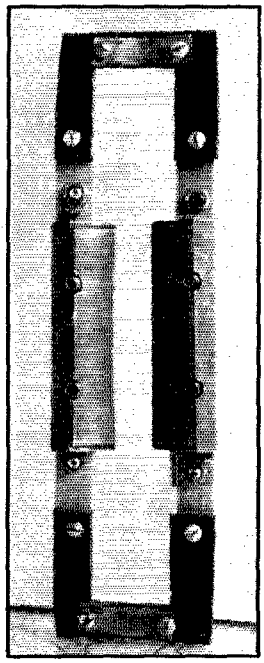

MAGNETS, POLE PIECES AND RIBBON SUSPENSION BEFORE THE RIBBON IS PLACED IN POSITION

it extra springiness so that it can be stretched when mounted and yet will respond to very slight sound pressure. The wrinkling process gathers the ribbon together and it will stretch like a coil spring. In mounting the ribbon we make use of this property to keep the ribbon snug so that the changes in position of the microphone do not cause it to sag. After crimping, a ribbon will withstand considerable pull but be careful not to make it too tight. The photograph should be self-explanatory as to method of crimping. Only slight pressure is used on the gear which is run over the ribbon. The felt mat allows the ribbon to give and accommodate itself to the teeth.

Now that you have the ribbon ready and the entire pole assembly rigidly mounted to the magnets, you are ready for placing the ribbon in position. The pole pieces should be "dodged" around slightly by loosening the machine screws in the assembly so that the ribbon slot will be straight and of constant width. The brass contacts should be in position but sufficiently loose to enable the ribbon to be slipped beneath them. Slip each end of the ribbon under the contacts. Leaving an inch or so over-extension, clamp the ribbon into the proper position at one end. You will have to pull

"I'M THE BOY WHO'S SATISFIED!"

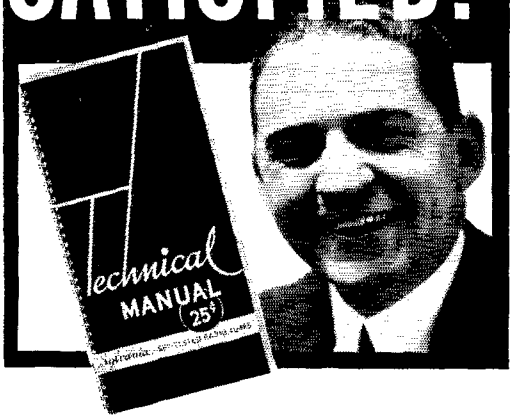

"I paid 25c for a Technical Manual that's worth far more . . . a real bargain in tube information."

AMATEURS need the Sylvania Technical Manual . . . for it contains the fundamentals of tube characteristics and performance that every amateur should know.

The Manual lists over 200 tube types . . . with circuit application information on each. Tells all about glass, metal, "G" type, Sylvania "Ballast" tubes, and tubes for Majestic receivers. Contains bias resistor charts, typical circuit diagrams, and many other important items.

Send the coupon below and 25c for the Sylvania Technical Manual . . . today! *You'll* be the boy who's satisfied.

Hygrade Sylvania Corp. also manufactures the famous Hygrade Lamp Bulbs

SYLVANIA
Set-Tested Radio Tubes

HYGRADE SYLVANIA CORP. Q.S.T.–38
Emporium, Pa.

Here is 25c. Send me my copy of the new Sylvania Technical Manual.

Name_____

Address_____

City_____ State_____

☐ AMATEUR ☐ SERVICEMAN
☐ DEALER ☐ EXPERIMENTER

the ribbon taut with the fingers at the opposite end and juggle it around slightly to get it centered properly. With one end clamped the juggling is repeated at the opposite end and adjustment of tension so made that when the entire assembly is laid flat, ribbon parallel to table top, the ribbon does not sag. Leads may be now soldered directly to the brass strips without danger to the ribbon. The excess ribbon may be cut off to the ends curled over the edge of the bakelite.

OUTPUT CONSIDERATIONS

The impedance of the ribbon is on the order of half an ohm. This must be matched to the impedance of the input circuit of your amplifier. If you are going to use the "mike" in close proximity to the preamplifier, say within 6 feet or so, it is possible to run the leads from the ribbon to a ribbon-to-grid transformer. In general, it is preferable to utilize a ribbon-to-line transformer, matching the ribbon to a 50- or 200-ohm line. This was mounted in the little cupola of the case, as shown in the photograph. Lines may be up to a thousand feet long without heavy losses.

The cable should be shielded and this shielding bonded to the magnet assembly and the core of the ribbon-to-line transformer. Lacking a transformer of this type, a working substitute may be found in a universal output transformer such as is used in coupling speaker voice coils in receivers. By connecting the ribbon to the lowest-impedance taps and the line to the primary of the transformer, a suitable combination may be found. A good transformer costs but little, and the better performance and hum-free operation from use of correctly designed units and good grade microphone cable are well worth the extra expense. Shielded wire may be utilized for cable, but a definite increase in gain will be observed when using the microphone cable.

Success of velocity microphones depends also upon the preamplifier used, and the manner in which the lines are coupled or matched has considerable to do with not only the gain but the hum level. A good input transformer, line-to-grid, is desirable. If you cannot afford one of the better balanced-winding types which tend to minimize magnetic pickup, use an ordinary one and if necessary place it in extra shield cans and even mount it in a position a few inches from the chassis in a spot which gives minimum hum pickup. Shielded leads, well-grounded preamplifier, and a decent input transformer mean low hum level, surprisingly good pickup, and freedom from "headaches."[2]

As to results, the following method was used in making comparisons with other types of microphones, including commercially-available products of both high and low cost. A speaker in a remote room in the house was connected to the output of the amplifier. A number of individuals listened to the various tests. A regular alarm clock can be heard ticking some 20 feet away

[2] The preamplifier used with these mikes incorporated a 6C6 pentode followed by a 6C6 triode connected. Output level at plate of latter is pleasing headphone volume.

HERE THEY ARE!

RCA Television Parts FOR KINESCOPE DEFLECTING CIRCUITS

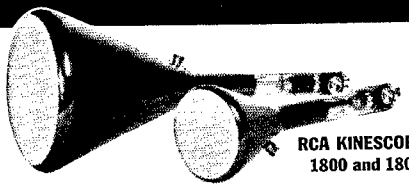

RCA KINESCOPES
1800 and 1801

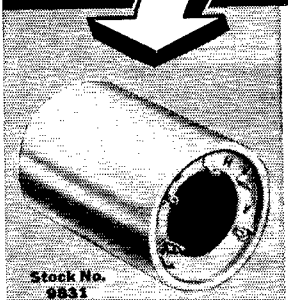

Stock No. 9831



Stock Nos. 9833, 9834, 9835, 9836, 9838

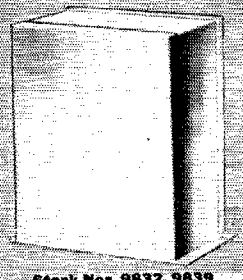

Stock Nos. 9832, 9839



Stock Nos. 9837, 9840

Again RCA encourages the amateur and television experimenter by making available the basic units for the construction of Kinescope deflecting circuits. These parts are of traditional RCA design, include the finest engineering features and are manufactured to give long service. They are for use with RCA 5- and 9-inch Kinescopes, Types 1800 and 1801.

DEFLECTING YOKE . . . For RCA 1800 and 1801 Kinescopes. Has windings for both horizontal and vertical deflecting circuits. Designed to have uniform flux distribution. Size: Outside diameter, 2½ inches; Inside diameter to fit RCA 1800 and 1801 Kinescopes. Length: 3¾ inches. Stock No. 9831. . Net Price **$10.00**

POWER TRANSFORMER . . . Includes all windings necessary for a complete power supply for the deflecting circuits of RCA 1800 Kinescope. Insulated for high voltage. Plate winding of 6,000 volts and two 2.5 volt heater windings. Stock No. 9832 . . Net Price **$12.50**

POWER TRANSFORMER . . . For 1801 Kinescope, plate winding of 2300 volts and two 2.5 volt heater windings. Stock No. 9839. . . . . Net Price **$10.00**

VERTICAL OUTPUT REACTOR . . . A fine auto-transformer for matching output of deflecting circuits to deflecting yoke vertical circuit. 120 henries inductance. 3800 ohms DC resistance. Stock No. 9833. . . . . Net Price **$3.00**

VERTICAL OSCILLATION TRANSFORMER . . . For low frequency blocking oscillator circuit. Gives best efficiency at 60 cycles. Stock No. 9834. Net Price **$3.00**

HORIZONTAL OSCILLATION TRANSFORMER . . . For high frequency blocking oscillator circuits. Has high efficiency at 13,200 cycles. Stock No. 9835. Net Price **$3.00**

HORIZONTAL OUTPUT TRANSFORMER . . . Has extremely wide frequency response and special characteristic to pass a 13,200 cycle saw-tooth voltage. Matches output of horizontal deflecting circuit to horizontal winding of deflecting yoke. Stock No. 9836. . . Net Price **$9.50**

POWER SUPPLY CAPACITOR . . . For RCA 1800 Kinescope. A high quality, 6,000 volt unit containing two .03 mfd. capacitors. Oil filled construction to insure long life. Stock No. 9837. Net Price **$11.75**

POWER SUPPLY CAPACITOR . . . For RCA 1801 Kinescope. Contains one .025 mfd. 4,000 volt unit and one .05 mfd. 3,500 volt unit. Oil filled. Stock No. 9840. Net Price **$5.50**

POWER SUPPLY REACTOR . . . Newly designed for Kinescope filter circuits. Insures good regulation in power supply circuit when used with Stock Nos. 9837 and 9840, shown here. Stock No. 9838. Net Price **$4.75**

RCA KINESCOPES 1800 and 1801 . . . Especially designed for television reception. They provide a clear picture of slightly yellowish hue. RCA 1800—9-inch Kinescope, **$60.** RCA 1801—5-inch Kinescope, **$40.**

Over three hundred million RCA radio tubes have been purchased by radio users . . . In tubes, as in parts and test equipment, it pays to go RCA All The Way.

• • •

RCA presents the "Magic Key" every Sunday, 2 to 3 P.M., E.S.T. on the NBC Blue Network

Ask your distributor, or send 10 cents to Camden, N. J., for a commemorative advertisement on RCA's television tube announcement.

RCA Parts

RCA MANUFACTURING CO., INC., CAMDEN, N. J.

A SERVICE OF THE RADIO CORPORATION OF AMERICA

ANOTHER NEW CARDWELL

TYPE "J" FIXED AIR CONDENSERS

Have you ever wanted to make the tank condenser you use on 40, 20, or 10, resonate an inductance designed for 80 or 160 meter operation? With the new fixed capacitors by Cardwell — (plug in type) — such procedure is practical. The correct L to C ratio can be obtained on any frequency, yet you use only one variable capacity. Note that plates are readily removable for fixed capacity adjustment. Procure the Cardwell Catalog No. 40 and peruse the data therein on L to C ratios. The two capacitors shown in this ad are a starter — do you fellows want more like them? Tell us about it.

JCO-45-OS "JB" JD-80-OS

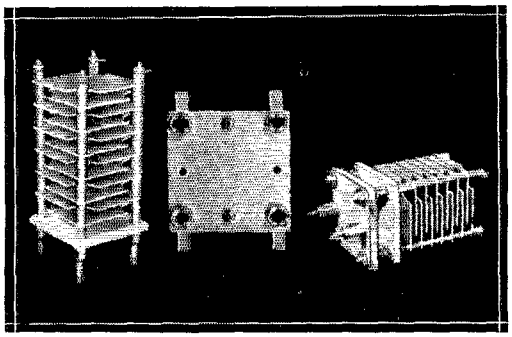

TYPE JD-80-OS fixed air condenser, 80 mmfds., .125" airgap, 5000 V., Alsimag 196 insulation. List price..... **$5.50**

TYPE JCO-45-OS fixed air condenser, 45 mmfds., .250" airgap, 7500 V., Alsimag 196 insulation. List price..... **$5.50**

TYPE "JB" — Jack Base for fixed air condensers. Fits either unit. Alsimag 196 high frequency insulation. List price..... **$1.00**

CARDWELL ACCESSORIES

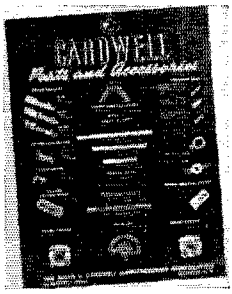

Many amateurs and experimenters will welcome the parts and accessories made available by Cardwell. Mounting brackets, Hexagonal Posts, Extension Posts, Mounting Pillars, Mounting Brackets, Connecting Clips (especially good in connection with air wound inductances) and the new Cardwell Alsimag insulated flexible shaft couplings, are among the "gadgets" available. All items on this counter card strictly in accord with Cardwell high quality standards. See these items at your dealer's.

THE ALLEN D. CARDWELL
MANUFACTURING CORPORATION
83 PROSPECT STREET, BROOKLYN, NEW YORK

from the mike. The breeze blowing through the window screen is plainly audible. In fact nearly all sounds such as those made by birds in the garden outside the window, cars going by on the road, people talking and moving about in the next room, are readily picked up and recognized. A person speaking in a medium-sized room can be heard from any position in the room. When used on a P.A. job outdoors excellent pickup was experienced in reënforcing dialogues and group singing.

Fidelity and frequency response were checked by placing the mike in the same room with an electric phonograph and picking up the actual sound emitted from it. Using a frequency test record giving notes continuously variable from 10,000 to 30 cycles, the microphone picked up and carried all frequencies from 7000, the upper reproduction limit of the phonograph, to the deepest recorded. Similar tests on the air yielded similar results.

In direct comparison with an RCA PB-90 velocity microphone (this is the type formerly used with the 20-watt portable public address equipment and at Radio City) the home-made microphones gave a creditable performance, although the commercial product is somewhat more brilliant and has slightly higher output. All in all, the comparison was very favorable to the home product, and, considering the difference in cost, the results are most satisfactory and highly pleasing to the constructor.

A few precautions must be taken in using microphones of this type on the operating desk. They will, of course, pick up hum by induction from near-by power transformers and speaker fields. Accordingly they must be so located as to pick up minimum hum when used near receivers. Generally a three-foot separation will reduce hum to a negligible level from this cause.

However, they do allow the operator to sit back in his easy chair, to make notes at his leisure, without the necessity of holding the mike to his lips, and if visitors are present all can take part in the conversation from their chairs without stirring. At W1JXP two of these mikes are used, connected in parallel, giving a pleasing binaural effect. The pair so connected can hardly be distinguished in performance from the RCA mike previously mentioned.

Room echo and reverberation, of course, enter the picture prominently if full sensitivity is utilized. For close talking purposes the gain can cut to reduce background and room noise. Curtains, wall drapes, and bare windows all exert influence either by sound absorption or reflection. A rug hung on the wall at the rear of the operating desk and directly behind the microphone prevents, to a great degree, the reflected sound wave from the wall entering the rear of the mike and causing echo effect.

The cases shown were made from basswood, the rods are dowel sticks and the grill cloth thin silk. Little, if any, cavity response or boominess seems evidenced from the use of four instead of two magnets to increase magnetic intensity, nor from the housing.



Imagine the kick . . .

sitting on board your "Little Betsy," 20 miles at sea and talking by telephone (just like the one at home) with your friends, your office — and other ships. Think of the safety it affords — keeping you constantly in touch with shore stations all along the coast — and then, too, — if your prize dog has pups they can call you directly from home with up-to-the-minute details. This is what our mariner looks like —

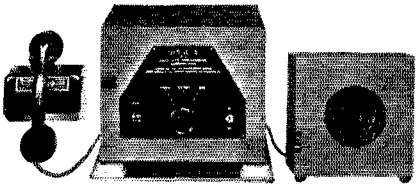

HARVEY *Marine 12*

Ship Radiotelephone is licensed for use on ships under patents of the American Telephone & Telegraph Company. It is compact, with crystal controlled transmitter and receiver in one cabinet — easy to operate, only one master control — range, 50–100 miles. For a more complete description write to Harvey Radio Laboratories, Inc., 25 Thorndike Street, Cambridge, Mass., for folder M12.

HARVEY

All in all, from pleasing appearance to fine pickup and faithful reproduction, the home-made velocity microphone is well worth the effort and trouble demanded in its construction.

The writer wishes to extend his thanks to his brother for his assistance in solving various mechanical details of construction.

A.A.R.S. Activities

(*Continued from page 84*)

One of the most interesting phases of the Army Amateur System is cryptanalysis, which is taught and conducted by each Corps Area Signal Officer, with experts in each Corps Area. Cryptanalysis in itself is a very fascinating hobby.

During the Christmas Holiday traffic season, KA1HR numbered originated messages consecutively from 1 to over 2000.

Using information obtained by radio, several Corps Areas work problems in locating unknown stations.

3.8% of the total number of amateurs in the United States are A.A.R.S. members; 80% of the A.A.R.S. members are also members of A.R.R.L.

On December 13, 1937, Oklahoma City vicinity suffered a severe sleet storm with ice-covered power, telephone and telegraph wires. The situation was efficiently handled by local amateur operators.

On February 5th, amateur traffic handling in Shanghai, China, was discontinued.

Another speed contest is contemplated this season, the transmission to be made from both the East and West Coast. Details will be announced later.

Briefs

W8PAJ, Clarksburg, W. Va., worked all states within about three months after getting his call; he uses a pair of tens in the final stage.

—•••—

An example of the real spirit of amateur radio is given by W1EHT. He writes, "On the summit of South Pack Monadnock, Peterborough, N. H., there have been erected two masts about twenty-five feet in height. On one is mounted a Pickard, on the other a matched impedance antenna, both complete with spaced feeders of sufficient length that by parking a car in the right position both can be used, one for receiving, the other for sending. These were erected by W1CJT and an S.W.L. named Sawtelle, and are left there all summer for any ham who wishes to use them. It is an excellent 56-mc. location, the mountain being 2280 feet above sea level, and only about 50 miles from Boston. Here's a chance for some good portable work, thanks to W1CJT and his friend."

—•—•—

The membership list of the League is not available for commercial circularizing but may be made available, in a Section or an area not exceeding one Division, for pro-amateur and non-commercial purposes, upon the application of any member and at his expense. Thus for some years past the headquarters office has supplied lists of names or has addressed envelopes for convention committees, candidates in A.R.R.L. S.C.M. and Director elections, etc., whenever requested to do so. The service is available of course to all candidates in elections, or for other worthy pro-amateur purposes. The actual cost of materials and labor is charged. Because this section of our office is heavily burdened, however, we require at least two weeks' notice to do the work.

ELECTROPHONE

Many items around almost any ham shack are home-made. Some amateurs make their own transmitters, some their own receivers, but very few amateurs have ever made their own microphone. This has been due primarily to the fact that it is difficult and expensive to make a microphone of good quality. The microphone about to be described is the exception to the rule, as it is easy to make and is a good quality microphone.

The Electrophone is a condenser microphone of novel construction which requires no external source of polarizing voltage. Very few parts are required to make the Electrophone, and almost any amateur can put one together in an evening. The output is higher than can be obtained from a regular condenser microphone, and if the Electrophone is carefully made, the output will almost be equal to that from a crystal microphone.



Fig. 1. View of Electrophone showing aluminum foil diaphragm

CONDENSER MICROPHONES

The regular type of condenser microphone consists of a small capacitance which may be varied by the pressure of sound waves impinging on one of the condenser plates. If a source of direct current is placed in series with this condenser the current will vary as the capacitance changes. If this current is passed through a relatively high resistance a varying voltage drop will exist across this resistance. The variation in voltage drop will take place at an audio rate, and if the high resistance is placed in the grid circuit of a tube amplifier, the audio frequency voltage may be amplified in a normal manner.

The fixed voltage source which provides the direct current is called a polarizing voltage. This voltage serves, in a condenser microphone, in the same way as the voltage in a carbon microphone, although the action of the two types of microphones is quite different.

No external polarizing voltage is necessary with the Electrophone, because it supplies its own internal source of voltage. This voltage is supplied with an electret.

ELECTROPHONE ELECTRET

An electret may be compared to a permanent magnet. That is, a permanent magnet is a continuous source of electromagnetic lines of force, whereas an electret is a continuous source of electrostatic lines of force. It is usually made in the form of a disk of insulating material which has permanently residing on its two flat surfaces electrical charges equal but opposite in sign.

Fig. 2 shows the manner in which the electret, having a positive charge on its upper surface and a negative charge on the lower, induces charges on the two plates forming the condenser microphone. The electric lines of force may be thought to travel from one electric pole to the other just as we have been accustomed to thinking of the magnetic lines of force in a permanent magnet with a north and a south pole.

Electrets themselves are not new, nor are condenser microphones employing electrets new, that is, it has always been theoretically possible to make a microphone in this manner. The Electrophone is a practical example of this sort of thing. The word electret was coined by Oliver Heaviside in the latter part of the nineteenth century to denote a permanently charged material, but the first electret was not made until 1925.

MAKING THE ELECTRET

The electret is the heart of the Electrophone, and should be made as carefully as possible. The general procedure is to take a piece of suitable insulating material and apply heat to it while a d-c voltage is applied across the two faces. Both the heat and the voltage necessary are critical, although not sufficiently critical to cause the constructor any trouble.

It is absolutely necessary to use the proper insulating material in preparing the electret. Those materials recommended are Lucite, Plexiglas or Kel-F. One material which will not work is polystyrene. If you are in doubt as to whether the material you have is polystyrene, Plexiglas or Lucite, a simple flame test may be made. Polystyrene burns with a smoky flame, while Lucite and Plexiglas burn with a clear blue flame.

Once you have the proper material, select a piece about one-sixteenth inch thick and cut it in the shape of a circle. The exact diameter of the circle will depend upon the microphone case you use. These details will be discussed later. Next, procure a heavy pan or thick piece of metal (see Fig. 3). The purpose of the large mass of metal is to maintain as uniform a temperature as possible on the electret.

The next item necessary is a power supply which will give a voltage of anything from 1000 volts up to approximately 10,000 volts. The higher the voltage that is used, the better a microphone you will have, from the standpoint of sensitivity. Ideally, use as high a voltage as possible without causing arc-over between the two polarizing voltage electrodes.

A satisfactory microphone may be made with 1000 volts, but for best results use at least 2500 or 3000 volts, and if you want to do a superior job, use 10,000 volts. The job of providing a power supply is not as difficult as it may sound, because only a few *microamperes* of current are required.

In case you haven't already guessed it, the best place to obtain a high voltage which is capable of only a small amount of current is a television receiver.

An r-f power supply of this type is ideally suited, not only because the voltage runs quite high, but also because there is much less danger involved in using such a power supply. However, regardless of the type of voltage supply used, remember that high voltages are dangerous and extreme caution must be exercised so as to avoid contact with the high voltage.

If you are unable to obtain a high voltage supply, one may be put together for the purpose. Fig. 5 shows a suggested circuit for a high-voltage power supply.

Once everything is ready, we may proceed to make the electret. Place the large pan or piece of metal on a source of heat. A burner in a gas or electric stove is quite suitable. Arrange the insulating material on top of the pan as shown in Fig. 3. Procure a top electrode (you may use the top of the microphone case as explained later) and place it on top of the insulating material, making sure that it is centered so as to prevent arc-over.

Next, connect the negative voltage supply to the bottom electrode, and also to the stove, then connect the positive lead from the power supply to the top electrode. Now, leaving the voltage supply turned off, turn on the heat and bring the insulating material up to temperature. Plexiglas and Lucite should be brought to a temperature of 140 degrees Centigrade (285 degrees Fahrenheit) and Kel-F should be heated to 205 degrees Centigrade (400 degrees Fahrenheit).

These temperatures are not too critical and one may use the softening point of the plastic as a convenient guide instead of using a thermometer. Each of the temperatures listed is the point at which the insulating material begins to soften. If desired, a small piece of the material may be placed in the pan and used as a test piece. Examine it with a fork periodically and when it becomes soft the larger piece will be at about the proper temperature.

At the moment when the plastic has reached the proper temperature, turn on the high voltage supply and leave it on for two hours. During this two-hour period the temperature of the plastic should be maintained at the temperatures previously mentioned. In general the heat will have to be turned down a bit in order that the temperature is not increased. Keeping an even temperature is not difficult if a large body of metal is used as indicated. After two hours, turn off the heat, but keep the high-voltage supply on. When the insulating material has cooled down to room temperature, disconnect the high voltage.

If you wish to check the actual temperature of the electret to ascertain if it is cool, remember to turn off the high voltage. Also, do not touch the face of the electret, either at this time or at any later time, as continuous handling of the electret will eventually ruin it. When you have finished with the electret, wrap it in metal foil until you are ready to mount it in the Electrophone. Any spare electrets you may have made should also be stored in this manner.

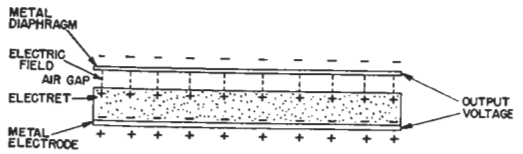

Fig. 2. Cross section of Electrophone

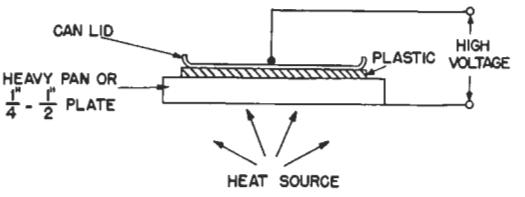

Fig. 3. Arrangement for charging the electret

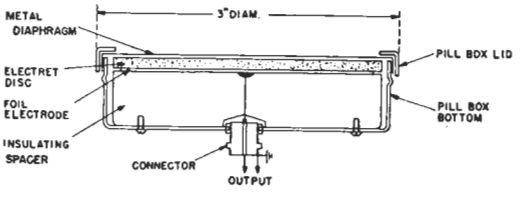

Fig. 4. Cross section of Electrophone showing constructional details

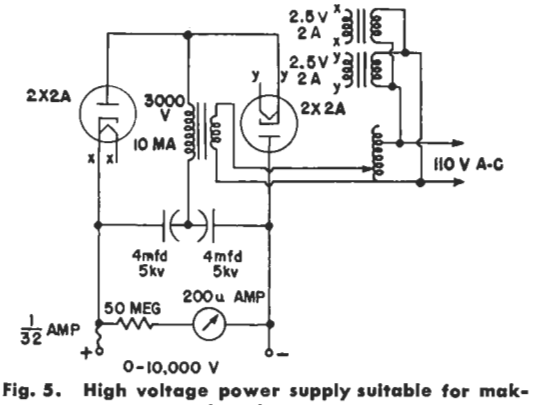

Fig. 5. High voltage power supply suitable for making electret

COMPLETING THE MICROPHONE

Amateurs with machine shop facilities will no doubt be able to make a very fancy housing for the microphone, but metal pill boxes or salve cans, three inches in diameter and one inch thick are available at most drug stores or drug supply houses, and these make an ideal case for the Electrophone. The photographs show quite clearly how these salve cans are employed. The top of the salve can can be used as the top electrode when making the electret, as it has a rounded and curved-up edge which helps prevent voltage flashover.

After the can top has been used in this manner, the center of it may be cut out as shown in Fig. 1. The hole should have a diameter of approximately $2\frac{3}{4}$ inches. A standard meter punch may be used, or the area may be chiseled out neatly.

The next step is to provide the main body of the salve can with a connector of some sort. The type shown in Fig. 6 is a standard microphone connector

of the sort that you might normally put on the chassis of your speech amplifier. Mount this connector in any convenient manner.

Referring to the cross-section view of the Electrophone, Fig. 4, you will note that an insulating spacer is required. This can be almost any substance, although the regular plastics will probably work the best. Its diameter should be such as to clear the inside of the can (in our case 2⅞ inches) and its thickness should be adjusted to locate the outer surface of the electret just flush with the edge of the can, as shown in the sketch. Two holes may be drilled and tapped in the bottom of the insulating material to hold it to the bottom of the can.

A clearance hole for the output connector must be placed in this plastic, and also a hole must be drilled through the piece, in the center, in order to make contact with the foil on the bottom of the electret. To mount the insulating spacer, first solder a piece of bare wire to the output connector, then slip the insulating spacer into the can while feeding the wire through the center hole in the spacer. Next, fasten the spacer down with the machine screws and cut off the wire that protrudes above the spacer.

With a hot soldering iron a little depression about ¼ inch in diameter is melted out around the wire and a ball of solder formed in this depression. The solder should protrude slightly above the surface of the spacer so that it may serve as a blunt contact point.

It is now time to take the electret out of its protective foil wrapping and mount it in the can. Before this is done, however, you must prepare a piece of metal foil—preferably aluminum foil of the sort that is sold in grocery stores—to use as the back electrode on the electret. Cut a circle of foil with a diameter one-fourth inch less than that of the electret. Place this piece of foil on one side of the electret, and press it firmly in place. Make sure that you get it in the right position to start with, as you will not be able to slide the foil once it touches the surface of the electret. A suggested way to do this is to place the electret face down on a large piece of foil, then carefully place one edge of the circular piece about one-eighth of an inch from the side of the top face of the electret, and slowly lower the piece of foil, keeping hold of it until you are sure that it is centered. Once it is on, carefully, but firmly, press the foil against the electret.



Fig. 6. Rear view of Electrophone showing microphone connector

Finally, cut a larger piece of foil to use as a diaphragm, and place it over the top of the can (before the electret is put in) and fold it around the sides, trimming the edges to make a neat job. Now, remove the large piece of foil, place the electret in position, place the large piece of foil over the electret, and put the top of the can in place. The microphone should now look as shown in Fig. 1.

Ideally the top piece of foil should remain suspended above the surface of the electret with as close spacing as possible, but in the practical sense it does not matter if the foil touches the electret in a few spots. However, do not press the outer foil against the surface of the electret, as the more contact area that exists, the less output you will get from the microphone.

Many modifications of this construction will undoubtedly suggest themselves to the experimenter. The important thing to remember is that dimensions are not critical and an experimenter need not be hesitant to construct a working microphone of this type.

PERFORMANCE

Several Electrophones have been in use at W2UKL for over a year and no decrease in the output voltage of 0.02 to 0.03 volts has been observed. Some experimenters have observed electrets for twelve years without noticing any substantial decrease in charge. No attempt was made to protect them from humidity other than keeping them in their mounting cans.

No feedback troubles have been experienced and the Electrophone was merely plugged in to an existing crystal microphone input jack on the speech amplifier. The quality is good and on-the-air tests showed the Electrophone to compare favorably with a crystal microphone.

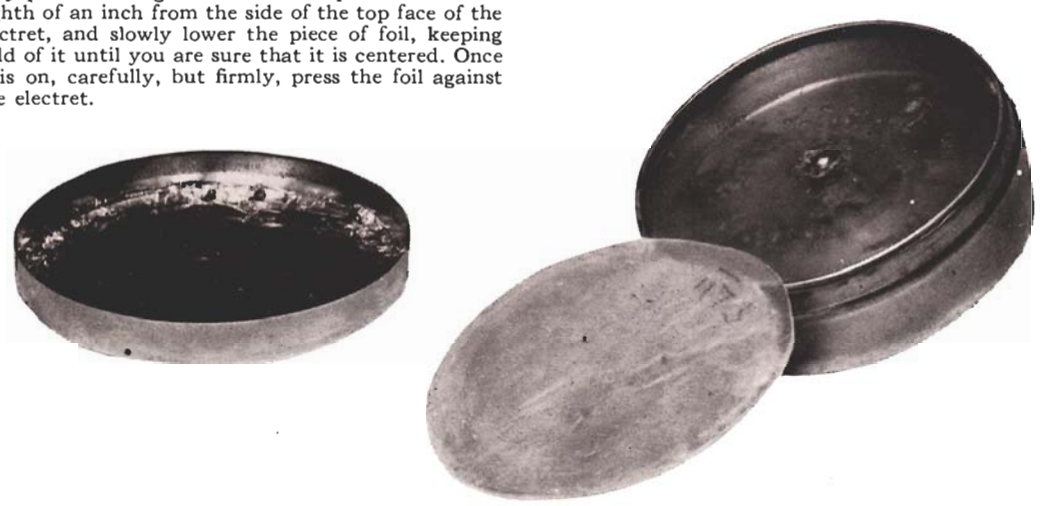

Fig. 7. Disassembled view of Electrophone

Modulation Monitoring

Signal reports are subjective opinions and recordings from a detector only show the tone of the signal. Modulation artifacts never revealed in these can cause problems 5-25KC away from one's carrier. In AM, nothing is as important as having a look at the outgoing signal. So many kinds of trouble can exist within it and these are not normally audible until they are well past the point of annoying others who are trying to use the band, but a modulation scope shows them instantly. The articles show how to make or convert one.

CRTs and old scopes are plentiful and fairly cheap from hamfests and other hobbyists. A decent transmitter will be able to supply the 500-3000V needed by most CRTs, and they take only a fraction of a milliamp. In most scopes, the high-resistance voltage divider from which the CRT's operating potentials are derived consumes more current than the tube itself. For tubes not shown in the articles, refer to tube manuals or the "TCA Data Cache" from the Tube Collectors Association as sources for various datasheets.

Those not wishing to make a modulation scope from scratch can convert any scope by routing the signals to the deflection plates, through some convenient network so that the proper amount of voltage is provided for deflection, no unwanted phase shift or cross-coupling is introduced to the displayed pattern, and the instrument's internal voltages are not upset.

By coupling the modulator output and RF outout into the scope at the deflection plates, all the other original CRT control functions of the scope are preserved and made use of, such as beam positioning, intensity, and focus. This is HV stuff and the DC levels at the plates may be high, and shorting out or excessive signal can blow the scope's positioning circuitry or amplifiers. If it doesn't make clear sense, get help before doing this kind of hack.

A scope with a bandwidth exceeding the RF frequency in use can be used as-is. Because of the near-rabid lust for digital scopes and LCD displays, these older CRT based instruments rated for 50-100MHz are not too expensive to use as a dedicated modulation monitor. They need not be perfect and a small defect on the CRT face is not a real issue and usually results in a low price. Just make sure the trace is otherwise bright and sharp enough.

Although the articles show separate scopes and meters, which were intended to be used outside of the transmitter, there is no reason not to build-in the CRT to the transmitter as long as the tube is shielded from magnetic and RF fields, which will deflect the beam. Of course, a new or very good tube is wanted for a built-in job. Mountings and bezel hardware salvaged from the donor scope are handy.

Most articles show a tube no larger than 3 inches diameter. This was done for purposes of economy. Why not use a large 5 inch CRT? The differences are: larger hole, longer tube, slightly more deflection voltage required (not an issue with a decent transmitter), and sometimes an additional supply of 2000-3000V for an accelerator terminal, easily obtained with a voltage multiplier stage.

Note that a few high-tech high-speed scope CRTs use up to 10KV. This is for high speed, high brightness work and photographing electrical transients. Consider the HV if stripping a 'good' scope to get a high performance CRT. A 400MHz CRT is not needed for a 30MHz monitor scope. Almost any CRT, from the cheapest and oldest scope, can work to 50 or100MHz. The limitation in low performance scopes is usually the deflection amplifiers. If common CRT needs 2000V for a given brightness, a high performance one may need 5000V for the same performance as a modulation monitor.

Generally, (anode voltage) = (brightness) * (writing speed), so for a given tube, use as much voltage as possible within the ratings and don't worry about a low-tech CRT's performance. Any scope CRT will work as a modulation monitor.

Lastly, it should be apparent that a CRT for this use must be electrostatically deflected, must be a scope CRT. No TV picture tubes.

A Modulation Monitor for 'Phone Transmitters

By James J. Lamb, Technical Editor

THE increasing improvement in selectivity of our receivers is revealing that all is not according to Heising in the modulation of ham 'phones. Time was when modulation that sounded better than average was classified as "just like a broadcast station," and everything that was broad was thought to be a product of frequency modulation. Receivers are more critical of quality in these days, however, and frequency modulation is a rare exception. Selective receivers, especially those of the s.s. variety, are showing that most of the broadness isn't the fault of frequency modulation and that even perfectly stable crystal-controlled outfits are taking up a lot more than the 6 kc. or so they ought to occupy. There's another monkey-wrench in the junk box besides frequency modulation. And we don't have to dig very deep to find out what it is.

Lopsided modulation, the same animal as the carrier shift pictured right at the beginning of the 'phone chapter in *The Radio Amateur's Handbook*, is the explanation. It is purely the result of improper operation of the transmitter and causes the generation of a flock of spurious sidebands that spray out kilocycles and kilocycles beyond the frequency range a good 'phone signal should occupy. High receiver selectivity is no proof against these sidebands of course, because some of them splash into tune even when the unwanted carrier is away off resonance. This kind of modulation is largely responsible for the "burpy" interference that is caused by too many 'phones — over 50% of those that were recently checked on the 75-meter band, as a matter of fact. When in tune, 'phones badly afflicted with this carrier shift or overmodulation are identified by a peculiar kind of distortion that damages their quality, too. It's a grating harshness of a "stringy" character that shows up on the peaks. So the trouble isn't only one causing interference. It prevents a 'phone from having real quality, too — in spite of all the swell microphone and speech equipment there may be in the shack.

What actually happens in the transmitter is that the upward and downward swings in the modulation cycle are not equal. The upward swings may be greater than the downward, or the downward swings may be greater than the upward. Either way, the results are the same. As a consequence, the *average* amplitude of the modulated wave varies at change-in-modulation-level frequency, which isn't the same as modulation frequency but is much slower. This might be looked at as simultaneous modulation at two different frequencies, one the voice frequency and the other the change-in-voice-intensity frequency, something like modulation of the modulation. This complicated process inevitably results in the generation of a whole flock of unwanted spurious sidebands, evidenced by damaging broadness and distortion.

Now the specification for proper modulation is that the *average amplitude* of the wave must remain unchanged. It should be the same with the carrier modulated as it is for the unmodulated carrier. Unfortunately, no meter ordinarily used

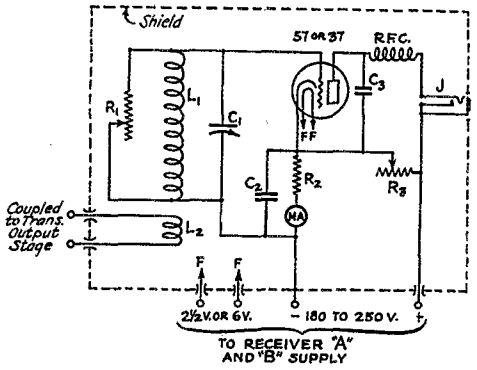

FIG. 1 — CIRCUIT DETAILS OF THE VISUAL MODULATION MONITOR

Carrier shift upward or downward is indicated directly by the meter.
L_1C_1 — Coil and midget condenser to tune to transmitter frequency.
L_2 — Coupling coil of 1 or 2 turns at ground end of L_1.
C_2 — 1-μfd. or larger, audio by-pass.
C_3 — Plate r.f. by-pass. 0.005-μfd. or larger.
R_1 — Variable resistor, 2000-ohm or so. May be left out for low-power transmitters.
R_2 — Cathode resistor, 100,000- or 150,000-ohm 1-watt.
R_3 — Bleeder to set minimum bias, 100,000- or 150,000-ohm variable resistor. May be omitted.
RFC — Short-wave type r.f. choke.
J — Single-circuit (closing) jack for 'phones.
MA — 0-1 d.c. milliammeter.
A Type 56 or 27 tube should be used for 2.5-volt a.c. filament supply, a 37 for 6-volt supply. The unit should be shielded as indicated.

in a transmitter will indicate directly whether or not this condition is being obtained. The antenna ammeter certainly will not do it. It shows *effective* current value, not average. It will kick up when the average is actually shifting down! A volume level indicator in the audio system is useless. The plate milliammeter of the modulated stage tries to show something, by kicking either upward or downward when it should remain

steady, but its indications are difficult to interpret. What we want is a simple gadget that will show us just what is happening to the carrier itself. We want a meter that interprets things directly in terms of average values. And we have it in the ordinary linear rectifier.

The most linear of so-called linear rectifiers that we know of is the self-biased type plate detector that has a resistor in the cathode circuit. It's the same type of rectifier as that used in the linear vacuum-tube voltmeter described by McLaughlin in May, 1932, *QST*. Look at the curves of that article and see how linear it is. The secret of its usefulness for our purpose is that the plate current is directly proportional to the *average* value of the a.c. (r.f.) input to the grid. In other words, as long as the average value of the input signal is constant, there is no change in plate current. If the average shifts upward, the plate current increases. If it shifts downward, the plate current also kicks downward. All we have to do is hook the thing up with a d.c. milliammeter of suitable range in the plate circuit and it becomes our modulation monitor. It is just the thing for listening monitor use, also.

The self-explanatory circuit of the one we have been using is shown in Fig. 1. It is essentially a one-tube receiver using a non-regenerative detector or, if you please, an r.f. vacuum-tube voltmeter. Take your choice. The resistor R_3 is not absolutely necessary but makes it possible to set the minimum bias so that nearly the full characteristic of the tube can be utilized. It is adjusted so that the tube draws almost zero current with no signal on the grid.

The best pace for the monitor is right on the operating table, where it can be seen by the operator, and shielded leads may be used to connect a coupling turn at the transmitter's output circuit to the monitor input. The coupling at the transmitter end and the resistor R_1 are then adjusted so that the milliammeter reads about 4/10 ma., assuming a plate voltage of over 180. The circuit L_1C_1 should not be detuned from resonance.

After that it's just a matter of talk and watch the meter. When it shows a tendency to kick upward, overmodulation in that direction is taking place and the gain control simply should be backed off. But if it should kick downward, then something is seriously wrong with the transmitter adjustment and a check-up is called for. If the output stage is a modulated Class C one, it may be just a case of insufficient Class C stage excitation, overloaded modulator (excessive Class C stage plate current) or too much modulator bias. If there is a Class B linear stage, downward modulation may call for reduction of the excitation coupling to that stage — and so on, as per instructions in the *Handbook* and numerous *QST* articles that have dealt with 'phone transmitter adjustment.

Active 'phone men who are working for improvement in the conditions on the 'phone bands are urged to make use of this simple monitor and talk it up over the air. There's a lot to be done.

World's Fair—Chicago, 1933

THE World's Fair Radio Amateur Council, the body in charge of amateur radio activities at the World's Fair, announces that the calls W9USA and W9USB have been assigned to the stations to be located in the Administration Building on the Fair Grounds. There will be four transmitters in operation and two receiving positions (with latest s.s. receivers). A club room will be available for visiting amateurs. Historical displays of amateur equipment will be one of the features of the exhibit in the Travel and Transport Building. All in all the Radio Amateur Council will have charge of 2000 square feet of floor space. W9USA got on the air in early March. The Communications Committee of the Council has charge of all operating, and only the finest operators in the Chicago area will be on duty. Reports on the progress of the amateur radio arrangements at the Fair are being transmitted regularly by specially appointed amateur stations throughout the U. S. and Canada. A special QSL card of attractive design will be sent to every station worked. It is hoped that twenty-four-hour operation can be maintained and that schedules may be kept with at least one station in each state. Watch out for W9USA and W9USB — World's Fair — 1933.

Dakota Division Convention

April 21st–22nd, Oxford Ball Room, St. Paul, Minn.

Under the auspices of St. Paul Radio Club. For particulars write Rex L. Munger, 2484 University St., St. Paul, Minn.

Velocity Microphone Correction

The drawing of the d.c. field type velocity microphone, Fig. 2, page 24, February *QST*, has occasioned some confusion among constructors because the overall width and thickness dimensions of the pole pieces (1) were incorrectly shown. These dimensions should be doubled; i.e., the pole pieces should be one inch wide and $\frac{3}{8}$-inch thick. This becomes apparent when the drawing is checked, because each pole piece must have a half-inch hole drilled in it to take the yoke (3), and because the ends of the yoke would project beyond the pole pieces if the latter are only 3/16-inch thick.

W6BTZ, W6EGJ, W6FWJ, W6AEP, W6EPW, W6AXQ, W6FEP, W6CJQ, W6HFP, W6MK, W6DEP and W6AM all deserve praise for splendid work, which we unfortunately do not have space to recount, even had we the details. Nor does this exhaust the list of active stations; it merely includes those concerning whose activities we have received reports. The calls of many other participating stations will be found in the Communications Department sectional reports this issue.

Dwight B. Williams, W6RO, transmitted a graphic "running" description of the 'quake to Ed. Stevens, W7BB, which was used verbatim by the *Seattle Daily Times*. The *Boston Post* got much the same story from Williams through George W. Bailey, W1KH, who stayed with him until a major shock forced W6RO off the air.

Forrest P. Wallace, W9CRT, announcer at WMAQ in Chicago, LeRoy Moffett, W9IJ, engineer at WENR, Chicago, and B. G. Swift of NBC's Chicago musical department, with the aid of W9VS of Oak Park, furnished all news of the earthquake that was broadcast over the NBC network, from the reports sent by amateurs in the area. Route Manager Wallace appealed to amateurs over the network to refrain from using their transmitters unless in actual contact with the coast — a new method of amateur control. It was Wallace who, after a QSO with a Los Angeles station the Sunday following the disaster, reported the ardent Californian as ending his description of the 'quake with the words, "But the climate is still fine. Come on out . . . !"



W6EQW HAD TWO MESSAGES FOR PEOPLE HERE BUT HAD TO DELIVER THEM AT "MISSING PERSONS BUREAU"

Evidence of the prestige of amateur radio in time of emergency is the experience of Edward D. Seeley, W6GXS, on his way from Los Angeles to Long Beach. He was halted not less than six times at police lines where sightseers were turned back, but each time, upon displaying his A.R.R.L. emblem and operator's ticket, he was permitted to pass.

Not only did amateurs handle thousands of messages of reassurance to relatives and friends from survivors, but in a number of instances they secured latest casualty lists from the stricken region and checked these lists for the names of individuals. Newspapers secured information on California visitors and relatives for entire cities in this way.

There is only one really dark spot on the record of public service in this emergency, and that is the attitude of one or two 4-mc. 'phone men in the south and middle west, who were callously selfish in their refusal to stand by and coöperate, and the W6 who deliberately and boastfully QRMed some of the most important traffic handled by W6AOR. But on the other hand there was the excellent coöperative spirit displayed by many of the 7- and 14-mc. DX men who, while anxious to pile up good scores in the international tests, turned wholeheartedly instead to the relaying of the relief traffic which flooded the traffic lanes of the nation. Here's hoping their scores did not suffer too greatly as a result of their fine public-spiritedness.

The California earthquake was a marvelous opportunity for amateur radio, and the amateurs of Southern California and the rest of the country responded nobly. Their performance will clinch even more firmly in the mind of the nation the conviction that amateur radio is an essential and indispensable asset to modern civilization.

(*See Editorial, this issue.—Editor*)

Strays

The Modulation Monitor

If the modulation monitor described in April *QST* is used with the bleeder resistor R_3 connected as shown in the diagram on page 17, the milliammeter should be connected between the cathode and the top of the cathode resistor R_2. Otherwise the bleeder current, as well as the plate current of the tube, flows through the meter. It also has been found advisable to connect a fixed resistor of five-hundred thousand ohms in series with the adjustable R_3. Needless to say, the telephone jack should be insulated from the shielding to prevent shorting the "B" supply.

Roanoke Division Convention

May 27th–28th, at West Virginian Hotel, Bluefield, W. Va.

The price of admission is $2.50. Further information will be furnished by the Chairman of the Board, Bluefield Amateur Radio Club, Bluefield, W. Va., on request.

A Simple Neon-Tube Oscilloscope for Amateur Use

An Inexpensive Means for Checking 'Phone Modulation

By D. H. Vollmer,* W6CQH

REALIZING that the QRM conditions in the amateur bands could be improved a lot if a means was provided for the fellows actually to see their signals (particularly the 'phones) with apparatus that would not cost too much, a simple oscilloscope was designed which would respond to *all* of the required frequencies, without using an expensive cathode-ray tube.

Knowing that a neon tube responds to voltage changes with negligible lag, and that the so-called "Tunalite" (neon column tube) would serve the purpose if it would only show both sides of the wave, a neon tube was made up which would start its glow in the center and increase the glow both ways from center in proportion to the r.f. voltage rise. Fig. 1-A is a drawing of the tube. It has a diameter of ⅜ inch, length 4 inches. The electrodes entering from each end are slightly separated at the center. Now when this tube is connected to the output tank of a transmitter, as in Fig. 1-B, any change in carrier amplitude will cause corresponding changes in the height of the glowing column. But the trouble here is that, though the glow column is constantly changing, it appears to the eye not to be changing, because the changes up and down are on top of each other. To get around this trouble, it was found that by viewing the neon tube in a mirror rotating on an axis parallel to the axis of the tube, the image of the tube would appear to slide across the mirror (which might be called the screen), giving a sort of linear sweep. This solved the problem.

The speed of the rotating mirror required was surprising when actually tested, because it does not need to turn nearly as fast as at first thought, four or five hundred revolutions per minute being fast enough for checking even the highest audio frequencies. Synchronizing is a simple matter of adjusting the mirror driving-motor speed.

The photographs and diagram of Fig. 2 illustrate the construction and arrangement of the unit. The upright that holds the tube is a piece of ¾-inch wooden dowel, the front panel is Pressdwood (Masonite), the rest of the cabinet is sheet metal. The neon tube is mounted about 1½ inches from the side of the metal cabinet; thus the metal does not disturb the operation of the tube.

The tuning condenser is a Pilot midget (100-$\mu\mu$fd.) mounted inside the coil; the knobs on the panel control an off-on a.c. switch and speed regulating rheostat for the motor. The motor is a "Polar Cub" fan type, but almost any small series motor can be used, even down to one from the lowly electric automobile horn.

In operation, the neon tube's tank is tuned to frequency of transmitter, the amount of coupling (with link) adjusted until the glow

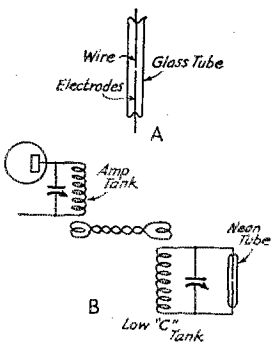

FIG. 1—THE ELECTRODE ARRANGEMENT IN THE SPECIAL NEON TUBE IS SHOWN BY A, WHILE B SHOWS THE CIRCUIT CONNECTIONS FOR R.F CHECKING

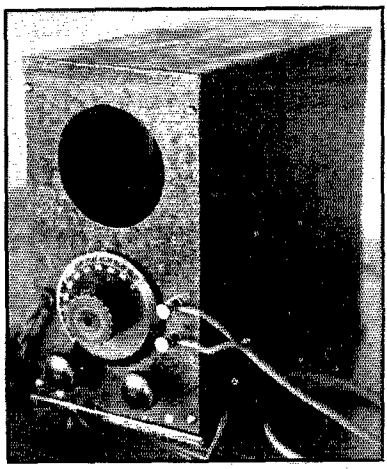

CHECKING THE MODULATION OF THE 'PHONE TRANSMITTER IS JUST ONE OF THE JOBS THAT THIS HOME-MADE NEON-TUBE OSCILLOSCOPE CAN DO

The "picture" is viewed through the hole in the front panel. The dial controls the rheostat used to adjust speed of the motor.

* 5126 35th St., San Diego, Calif.

runs about ¾ of an inch each way from center of tube. When viewed in the rotating mirror, the unmodulated carrier wave appears as a ribbon 1½ inches wide. The edges of this ribbon will be very clean-cut and definite, providing no a.c. is

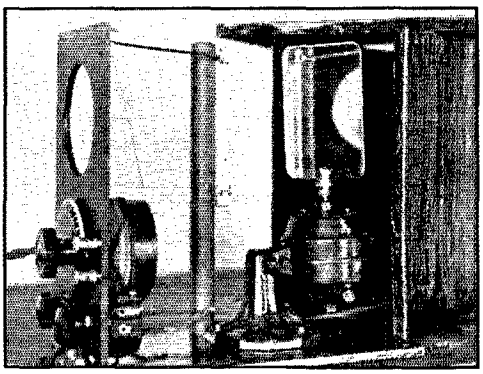

THE OSCILLOSCOPE PULLED OUT FROM ITS CASE, SHOWING THE SPECIAL NEON TUBE MOUNTED SLIGHTLY LEFT OF CENTER

The small fan motor, adapted to driving the mirror, is mounted behind it.

modulating the carrier and neutralizing is complete. A.c., or r.f. and a.f. feed-back, will show up as modulation lumps on the carrier band.

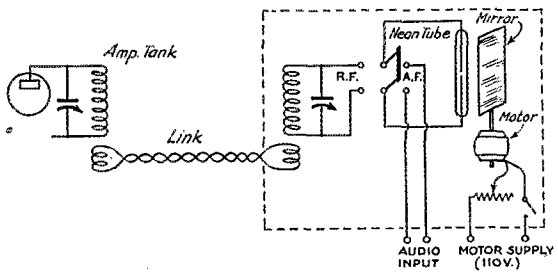

FIG 2—SCHEMATIC ARRANGEMENT OF THE OSCILLOSCOPE UNIT DESCRIBED IN THE TEXT

When audio modulation is applied as in a 'phone, a direct view of the wave form is obtainable, 100% modulation being easily recognized as with a cathode-ray oscilloscope. Insufficient r.f. excitation to the modulated stage is also very apparent.

Instructions for building this type of oscilloscope have been passed around to several Southern California hams, who have them in operation now and say that it has their complete indorsement, and that they would not take 50 bucks for theirs if they could not get another. These hams are W6CV, W6DZF, W6CSQ, W6EFD, W6KCE, and W6LKI.

I am now figuring on donating this neon tube design to some tube manufacturer (they would probably get it anyway), who will no doubt be able to produce them to sell for a few cents. Until such can be done, I can supply them to the fellows who would want to construct their oscilloscopes now, but due to the necessity of hand work on the tubes, I will have to have somewhere between three and five dollars each for them.

Recently during the organization of a Chicago area High School Band, W9OZT, W9MCU, and W9MWV, playing flute, clarinet and piccolo, called CQ on their instruments. From the gathering of 200 musicians 5 hams and 2 SWL's answered with almost everything from piccolo to tuba! Not such a bad percentage.

W3AKE and W3IA are very close friends and spend much of their spare time QSO. When working at their occupations they are still QSO after a fashion, since W3IA is the dispatcher at a police radio transmitter in Philadelphia and W3AKE is listening to him while cruising around as a member of the radio patrol.

Two WOR engineers making field strength measurements for that station in the vicinity of Wilmington, Del., were arrested recently by the police as suspicious characters believed to be conducting short-wave communications in behalf of the bootleg racketeers. They were released for lack of evidence. It looks as if the P.D. has set out on a difficult task if it attempts to arrest the horde of hams in this section who will be travelling about the countryside during the next few months with portable five meter outfits.

—*Charles E. Kane*

Recalling the story of "Shooting the Works" which appeared in *QST* for January, W4BCU had the following experience: "W4BCL held a heavy oak board outside the window to act as a backstop for the bullet when the attempt to shoot the hole through the window glass was made. When I fired the rifle, the bullet left the gun, went through the glass, struck the board, bounced back through the pane and struck me on the side of the head! Investigation showed that the bullet went through the same hole twice, although the hole was smaller than the diameter of a lead pencil." Any other hams trying this stunt should be prepared to duck!

Senior op: "What's the matter, son, did you cut your hand?"

Junior op: "No, daddy, I picked up a pretty bug in the garden this morning and one end of him wasn't insulated!"

A "Neon-Stick" Visual Modulation Monitor

By C. A. Campbell,* W9QK

DESPITE the many excellent articles published regarding 'phone adjustment, overmodulation, the most obnoxious of abuses, still persists. Most of us who operate 'phone consistently are so used to it that we develop a tolerance and learn to understand the peculiar sound of speech sliced up with "splashes"; but a talk with several who have given up 'phone for c.w. was so convincing that it seemed a little further investigation was needed.

All of our available accurate measurements are based upon the use of a continuous audio signal of one frequency for modulation when these measurements are made. What happens when we remove the 60 cycles, beat oscillator, or other source of sine wave, and substitute one of the most complex waves known, the human voice? A wholly false but too general impression exists (even in broadcasting circles) that because the *average* energy in speech is greatest at lower frequencies, the *peak* values are also; and, consequently, if means indicating either of these at the lower frequencies are employed, full information regarding possible overmodulation is had. Recent authoritative work [1] has shown that this assumption is not so! Energy peaks occur as often and with fairly equal intensity over the range of 200 to 5000 cycles. The intensities are very nearly equal and maximum between 500 and 2000 cycles.

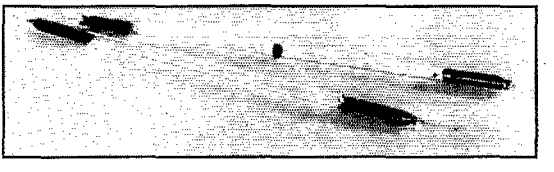

When a carrier is modulated, no matter how, it is the *peak* modulating voltage that determines the percent modulation; consequently, even though the amount of *average* energy is kept low, it is entirely possible and probable that numerous unobserved peaks are over-shooting on the positive half cycle and interrupting the carrier on the negative. As we have seen from too many articles to quote, this interruption causes an extensive series of r.f. sidebands which are spaced apart by the modulation frequency. The fellow with controlled carrier supposedly operates at constant percentage modulation, but in all the schemes so far proposed it can be shown that due to the time constant of the necessary audio filter, it is entirely possible for the higher-frequency audio components to "splash," since the carrier cannot rise as rapidly as a peak of higher frequency which may appear in the modulation circuit.

The Federal Communications Commission has instructed all broadcasting stations, or will shortly, to install monitoring equipment which flashes a light on *every* modulation peak exceeding a certain value, some of the more progressive stations having done this previously. The device in its commercial form, while excellent, is no doubt beyond the means of practically all amateurs; but it seems that something similar is necessary if we are to avoid needless interference. Some years ago I saw a piece of neon tubing connected to a modulated r.f. stage and watched the thing flicker with modulation; upon inquiring why it wasn't used as a modulation indicator, I was told that it apparently wasn't linear—or something to that effect—and that, anyway, the operator didn't know just where to let the end of the column shoot on modulation.

Out of curiosity, I obtained a piece of neon tubing myself to find out just how the thing did work and found that, on my particular outfit, if the glow was allowed to extend about half the length of the tube with the carrier unmodulated, 100% modulation was indicated by the tip of the glow just touching the other electrode. Upon passing *apparently* similar hunks of tubing around, the reports were variable to say the least; some said that they overmodulated with this adjustment, others couldn't make it work, and still others said that they were not "hitting it hard enough." Recently, with better facilities for investigating the neon tube itself, it was found that the bunch of tubes I had passed around were all different in construction and could not be expected to work alike. Maybe if some more were to be made just like the sample I was fortunate to possess, they would all work that way. To make a long story short, we went into the tube design quite thoroughly and found that the diameter and length had to be in the proper ratio, approximately 14 inches of 15 mm. tubing being about correct, and the gas mixture controlled quite carefully to keep the tip of the glow distinct. It was also found that if the tube was to respond linearly to peak r.f. voltage variations, the electrode drop had to be as small as possible (some electrodes may take as much as four or five hundred volts, while those adopted require about fifty). With this construction the life is over 5000 hours.

(*Continued on page 70*)

* 301 Dodson St., Geneva, Ill.

[1] Fletcher, *Bell System Technical Journal*, Vol. X, No. 3.

No Technician Should Be without

SOLAR Precision

CAPACITOR ANALYZER and RESISTANCE BRIDGE

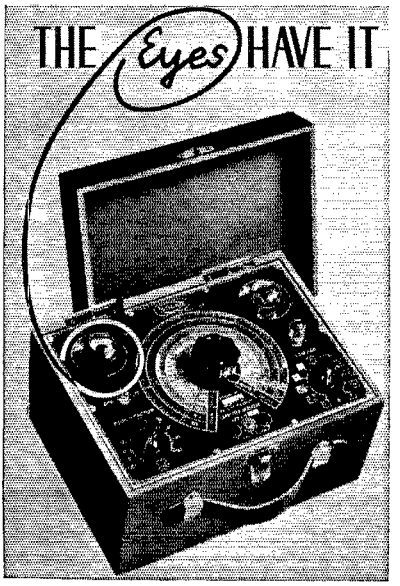

YOUR eyes and the MAGIC TUBE see all, know all . . .

QUICK AS A WINK!

Why guess, when you can KNOW so easily! This scientific instrument tells the complete story of a condenser without reference to charts or tables. Saves you time, trouble and money!

Capacity, power factor, leakage, resistance, all read directly on the panel. The highly sensitive No. 6E5 Cathode Ray Tube is used for balancing. Dials are color-coded to match settings. A refined and extended Wien bridge, built into instantly useful form for laboratory, shop and field work. A new and advanced necessity, obtainable from our jobbers everywhere.

Type CB-1-60

110 volts, 60 cycles. List Price.....$32.00

Dealer's Net (less tubes).....$19.20

Type CB-2-U

110-220 volts, 25-60 cycles. List Price..$40.00

Dealer's Net.....$24.00

Jobbers in All Leading Cities

ORDER FROM YOUR JOBBER

SOLAR MFG. CORP.

599-601 Broadway New York City

A "Neon-Stick" Visual Modulation Monitor

(Continued from page 21)

Regarding the operation of the tube, all that is necessary is to connect one electrode to a point in the modulated r.f. circuit which is at sufficient potential above ground; this need be nothing but a tap on the final tank circuit. The other electrode is allowed to dangle, or is secured to an insulator or otherwise separated from r.f., the tube being placed in a position convenient to observe. If the tap on the r.f. circuit is adjusted to such a point that the glow extends exactly half the distance between electrodes with the carrier unmodulated, 100% modulation will cause it to just touch the other one, full illumination indicating overmodulation. If the carrier only lights the tube for one-third of the distance, it is too difficult to observe this phenomenon since the electrode drop is a greater portion of the column and it is rather difficult, besides, to estimate two-thirds (or whatever 100% might require) of the distance. Anyway the power consumption is only about 0.9 watt, a 210 lighting it easily. Some 'phones using grid modulation do not have a capability of 100% and these 'phones should allow the illumination to extend about five-eighths of the distance between electrodes, allowing the tip to just touch the other electrode as before, insuring no more than 85% modulation.

The response of a neon column is linear as far as audio frequency is concerned up to 40,000 cycles and consequently will respond to any peak occurring in the audio frequency range. It was pointed out that a column of this sort responds both to positive and negative halves of the r.f. envelope. While this would be undesirable for use in an oscilloscope, nevertheless used as a peak visual indicator, this characteristic is very desirable since if the transmitter is adjusted so that unsymmetrical modulation exists, the maximum peak will never exceed double the average value (providing of course the operator watches the column). Likewise it will be found that, on some transmitters, the tube may go out during modulation for appreciable intervals of time. This indicates that the average value of carrier has been decreased below the ignition point of the electrode. Such a condition may occur when the modulation capability is exceeded and indicates a very serious break in the carrier.

As has been pointed out, the number of peaks occurring at high frequencies is approximately equal to those in the low end of the audio spectrum, on speech. In looking at the carrier with the inexpensive neon oscilloscope, a string oscilloscope, or a cathode ray tube, all with low-frequency scanning, a peak with very short duration is so narrow as to be unnoticed in the background of the many other wave shapes. Conversely, if the scanning mirrors or linear sweep be operated at a quite high frequency, low-frequency peaks are so broad as to be "spread out thin," and may be unnoticed in the general high-frequency hash. For this reason these devices are not so suitable for continuous observation. It is not intended to

(Continued on page 74)

SELECTING TRIPLETT JEWELS AND PIVOT POINTS

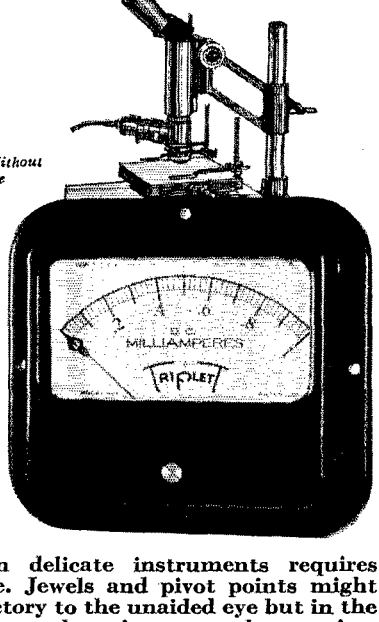

Precision Without Extravagance

Triplett Model 421 4" Square Instrument

Square instrument now made in 3" size also. Both 3" and 4" square instruments are available in all popular ranges.

Accuracy in delicate instruments requires infinite care. Jewels and pivot points might look satisfactory to the unaided eye but in the Triplett factory the microscope plays an important part in selecting each pivot point and jewel.

Skilled operators examine each point for exactness of pitch and polish. Likewise, the sapphire jewel in which the pivot rides must undergo the same careful examination for polish and finish.

It is no wonder that Triplett instruments have built a reputation for precision not only when new but also after use over long periods of time.

TRIPLETT MANUFACTURES

a complete line of all sizes and styles electrical measuring instruments for radio, electrical and general industrial purposes both standard and custom built. If you have an electrical instrument problem write to TRIPLETT.

TRIPLETT *Precision* ELECTRICAL INSTRUMENTS

The Triplett Electrical Instrument Co.
257 Harmon Drive, Bluffton, Ohio
Without obligation please send me
_____more information on Model 421.
_____New 1936 Catalogue.

Name_____

Address_____

City_____ State_____

(Continued from page 70)

say that the oscilloscope is not the best device in the world for lining up a transmitter with a constant modulation frequency applied! If we use the harmonic or trapezoidal sweep of the cathode ray tube, we can follow the variations of speech much better, but again overmodulation only appears as a bright dot contrasted to a rather large figure. Besides, the manufacturers say that the life of the tube is decreased by a very sharply focussed point appearing continuously at the same position. Again, it is quite obvious that a meter which will not respond accurately to a pulse shorter than 0.01 seconds, is hopelessly out of place in any form of measuring circuit depending upon it to indicate instantaneous values.

In conclusion, it seems that the answer to overmodulation is to use continuously some sort of visual indicator such as described above. It has been my experience, after trying the gadget out for some time, that overmodulation from W9QK is deliberate if it occurs. It is hoped that these tubes will be on the market in a short time.

Sweepstakes Contest Results

(Continued from page 33)

VE2HG	13280-39-119-A-32	*British Columbia*	
VE2IN	7602-28- 91-A-24	VE5FG	19944-48-145-A-53
VE2BK	6705-30- 75-A-31	VE5AL	15228-47-109-A-38
VE2JO	6510-31- 75-A- -	VE5JC	6006-42- 74-B-23
VE2HF	5220-29- 60-A-38	VE5CC	2228-15- 51-A-40
VE2AA	4788-24- 72-A-41		
VE2HI*	12- 2- 2-A- -	*Manitoba*	
		VE4SF	14310-45-107-A-25
Alberta		VE4SO	3540-28- 43-A-27
VE4NH	20213-49-139-A-48		
VE4GE	13986-42-113-A- -	*Saskatchewan*	
VE4EO	3844-31- 64-B-25	VE4OC	29865-55-186-A-88
		VE4HU	1596-19- 28-A- 7
		VE4PQ	1215-18- 27-A-17

Strays



A TWO-HOUR EARLY-MORNING QSO WITH AUSTRALIA JUST FINISHED

If these two gents look hungry it's because they have not yet had breakfast. They are, according to the General Electric Company's publicity release, the "Radio Brothers." The guy on the left is A. G. Hull, Technical Editor of Australia's "Wireless Weekly." On the other side of that very un-ham looking mike is Ross A. Hull, QST's Associate Editor. "A.G." was on his way back to Aussie after a world tour studying television and things when he stopped off at W2XAF to do a relay broadcast via XAF and VK2ME over some Australian B.C. stations.

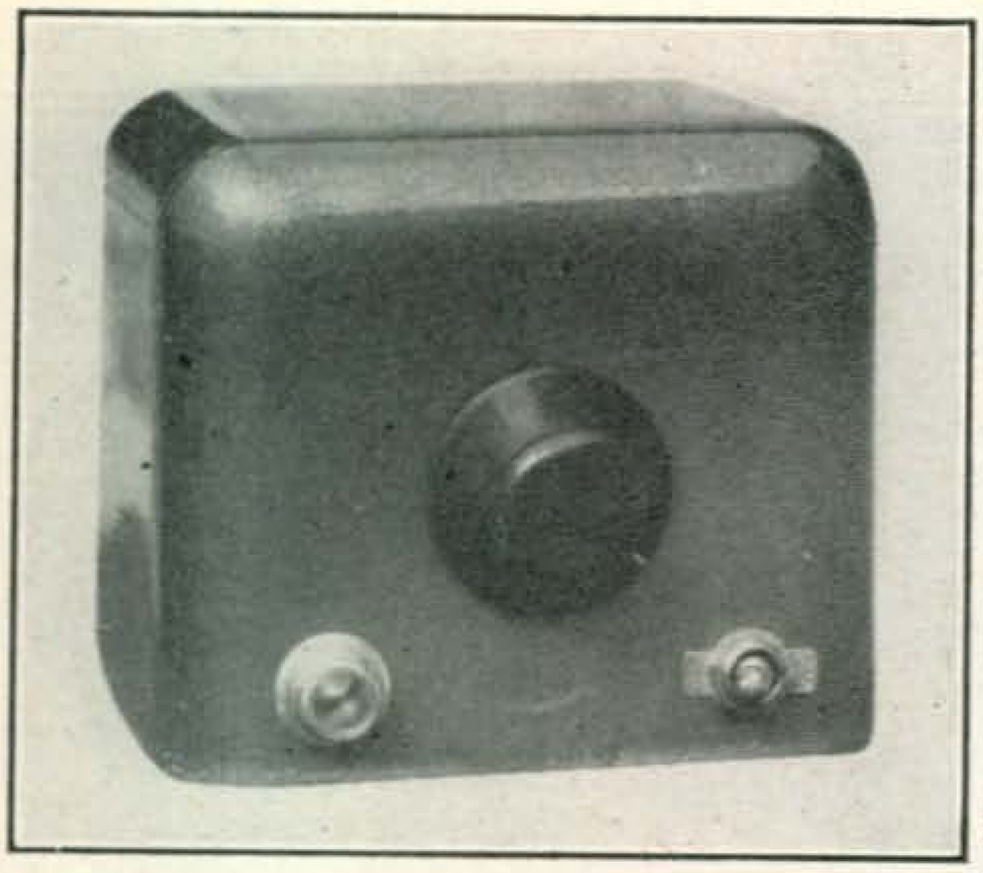

The modulation meter attachment to the CRO is simple to build and compact in size.

ELLIOTT A. HENRY, W2SYD, EX-W9FEN*

A Direct Reading CRO MODULATION METER

The cathode ray oscilloscope, once used, is indispensable. For the many amateurs who already own one, here is a useful auxiliary attachment.

THE METHOD of amplitude modulation measurement to be described, and used in the present equipment, is not new, having been used as far back as 1943 in the test of some war gear.

The system is based upon the use of a high-speed shorting switch to provide a zero reference level and thus to provide on the CRO screen an indication of unmodulated carrier as well as positive and negative modulation peaks. The system has been widely used to indicate percentage video modulation in television broadcast station modulation monitors.

Theory of Operation

Figure 1 pictorially describes an unmodulated (*a*) and an amplitude modulated (*b*) wave. After passing through a linear peak detector, the unmodulated wave appears as a steady d-c voltage whose value is proportional to the peak voltage of the unmodulated wave, while the modulated wave produces an incremental voltage whose peak at any given instant is proportional to the peak modulated carrier voltage at that instant. This is shown graphically in *Fig. 2* and the percentage modulation is defined as:

$$\text{Percentage modulation} = \frac{E_{max} - E_{min}}{E_{max} + E_{min}} \times 100$$

For 100% symetrical amplitude modulation, (called a modulation index of one) the instantaneous voltage varies between zero and twice the value of the unmodulated carrier wave. For any other modulation percentage there is a linear relationship between E_{max}, E_{min}, and Ecarrier. The relation between E_{max} and Ecarrier determines the percentage positive peak modulation while the relation between E_{min} and Ecarrier determines the percentage negative peak modulation.

For example, at 50% modulation E_{max} would be one and one half times greater and E_{min} would be one half of Ecarrier. If E_{max} was twice Ecarrier while E_{min} was one fourth Ecarrier, it would indicate 100% positive peak modulation and 75% negative peak modulation, a condition that might exist where the audio was polarized with the human voice.

Therefore, to measure modulation percentages we are concerned only with the magnitude of these voltages with respect to each other and not with their absolute magnitudes. By providing an indication, on a CRO screen, of the magnitude of the unmodulated carrier voltage, a reference is established whereby the relationship may be observed, and the percentage modulation, both positive and negative, read directly from a calibrated linear scale.

To show how this unmodulated carrier voltage

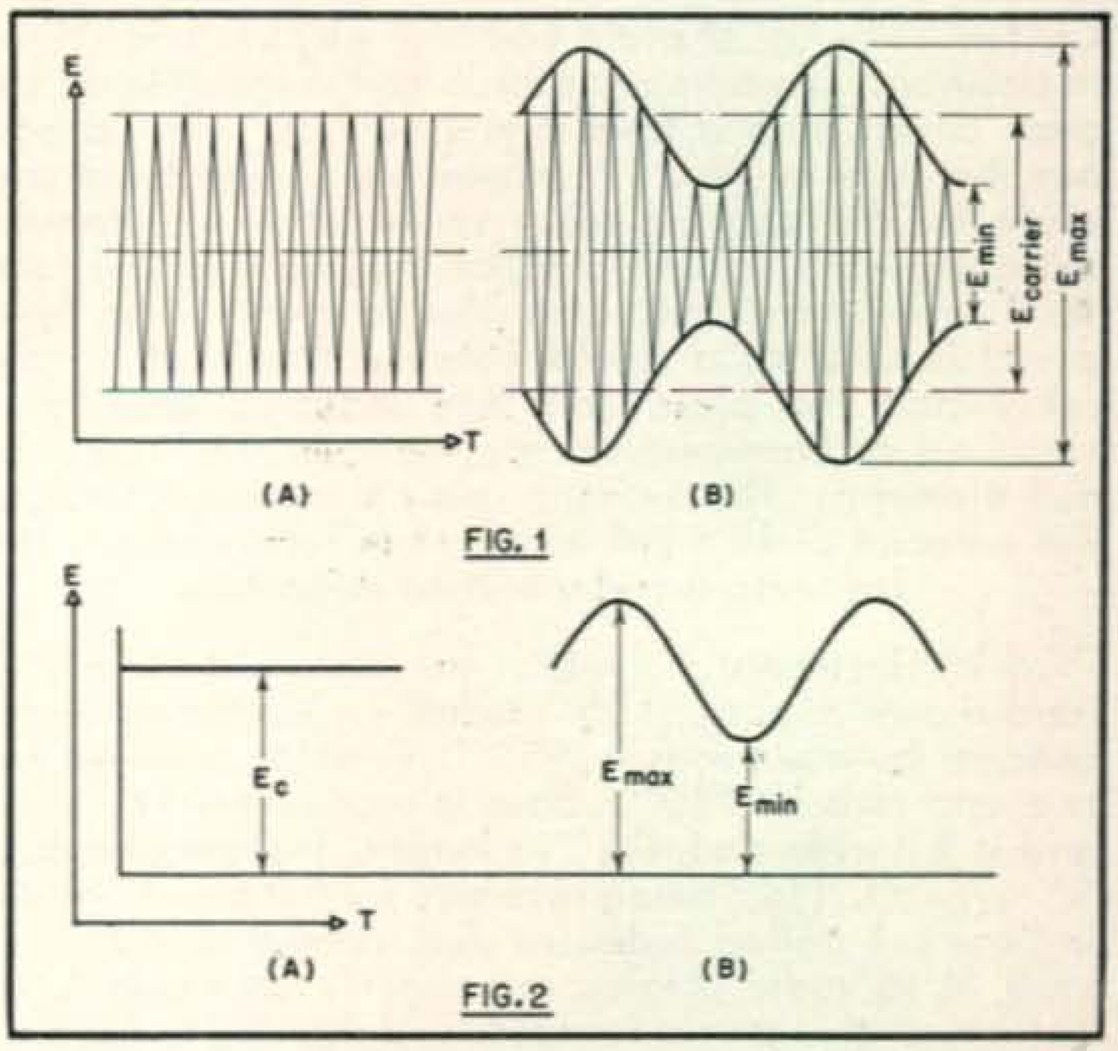

Fig. 1. Pictorial illustration of unmodulated (a) and amplitude modulated (b) wave.
Fig. 2. Graphic illustration of condition shown in Fig. 1.

* *c/o Globe Products Corp., 870 Maplewood Ave., Brideport, Conn.*

indication is obtained, reference is made to *Fig. 3.* When the switch S_1 is closed, with the battery polarity as shown, there is a rush of electrons from plate "A" of condenser C_1 to plate "B." To reach condenser plate "B," the electrons must pass through R_1, S_1, the battery, and R_2. The direction of current, or electron, flow is therefore such that during the period of current flow, or charge of condenser C_1, the grid of T_1 becomes positive with respect to ground. This condition continues until C_1 becomes fully charged at which time electron flow ceases and the grid returns to ground potential. The time of current flow is controlled by the time constant of the network, in this case essentially R_1, R_2, and C_1. Now, as the voltage developed across R_2, resulting from the charging current, makes the grid go positive, the "spot" on the CRO screen will move upward. As soon as C_1 is fully charged, however, current ceases to flow and the "spot" returns to its former position, remaining there as long as conditions remain unchanged.

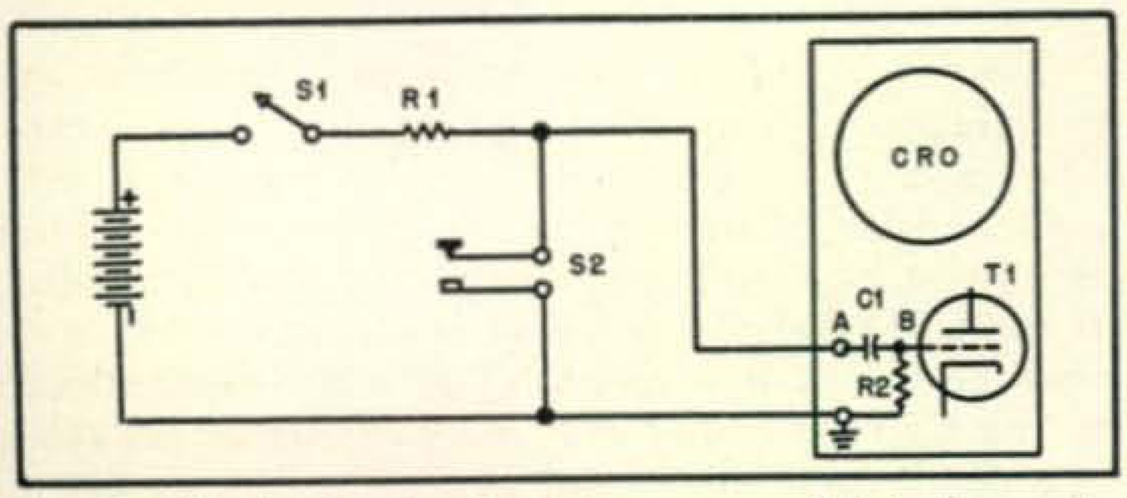

Fig. 3. Method of obtaining unmodulated carrier voltage indication.

If S_2 is momentarily depressed, C_1 will be rapidly discharged, while the battery will be protected from damage by the resistor R_1. The direction of current flow will now be from condenser plate "B" to "A" through R_2. This will make the grid go negative during the discharge period and the "spot" on the CRO screen will move downward. Therefore, the spot displacement will be proportional to the battery voltage, as C_1 has had a charge varying between zero and full battery voltage. If S_2 is made to operate rapidly and no time base is used on the CRO, two spots will appear on the screen, one above the other, and the distance between them is absolutely proportional to the battery voltage. With the CRO time base expanded, the pattern on the screen would appear as a series of pulses the duration of which is dependent upon the "on" time of S_2 and whose repetition rate is equal to the rate of operation of S_2.

By replacing the battery with the load of a linear diode rectifier and having S_2 operate automatically, a means is provided to show the carrier voltage reference on the CRO screen and the relationship of E_{max} and E_{min} to the carrier reference. *Figure 4* shows graphically the action of the shorting switch on the incremental output voltage of a linear diode detector as it would appear on a CRO screen with (a) and without (b) a time base. The modulation envelope would appear, under the latter condition, as a heavy vertical trace and the reference carrier level would be two dots located at the zero and negative 100% points, using a scale such as shown in *Fig. 5.*

Circuit Description

The circuit diagram is shown in *Fig. 6.* R-F energy from the final amplifier tank circuit is picked up by a coupling loop and fed to the pilot light, used as a visual level indicator. A 1N34 crystal rectifier is employed with R_1-C_1 forming the diode load. The time constant of the values shown is suitable for modulation frequencies up to 5,000 cps.

The value of resistor R_2 is not critical but should be approximately four to five times the value of R_1. R_2 is used to prevent the diode load from being shorted out during the switch "on" time.[1] The shorting switch is a Western Electric Co. mercury wetted contact relay, and is operated on what is essentially a half sine wave at 60 cps. Voltage from the 117-volt line is used to operate the relay, with condenser C_3 used in place of a dropping resistor. Resistor R_3 is used as a vernier adjustment to control the "on" time of the switch. The operating coil is shunted with a midget selenium rectifier which makes it essentially a polarized relay or, by by-passing the unwanted portion of the 60 cycles, provides the half sine wave for the relay operation. The relay, therefore, acts like an automatic switch operating sixty times per second.[2]

A diode tube could, of course, be used in place of the 1N34 crystal rectifier but the "emission pressure" of the tube would superimpose a voltage on the rectified output. Compensation for this condition could be made but it's far simpler to use the crystal diode. The "emission pressure" may be defined as the voltage developed across the diode load as a result of the high-velocity electrons reaching the diode plate when no external input voltage is applied.

Construction

The indicator may be made as an individual unit, as shown in the photograph, or may be built as an

1 The value of R_2 should not be so large that due to the capacity from point "A" to ground the higher modulating frequencies are attenuated more than a few degrees by the low-pass filter comprised of R_2 and the capacity from A to ground. It is important to realize that attenuation of audio modulating frequencies provide a percentage modulation indication that will be lower than the actual value. Poor transient (or square wave) response at the switching frequency may cause an erroneous indication—*Ed.*

2 Other switching means are discussed in the article by T. J. Buzalski, "A Method of Measuring the Degree of Modulation of a Television Signal," *R.C.A. Review*, June, 1946.

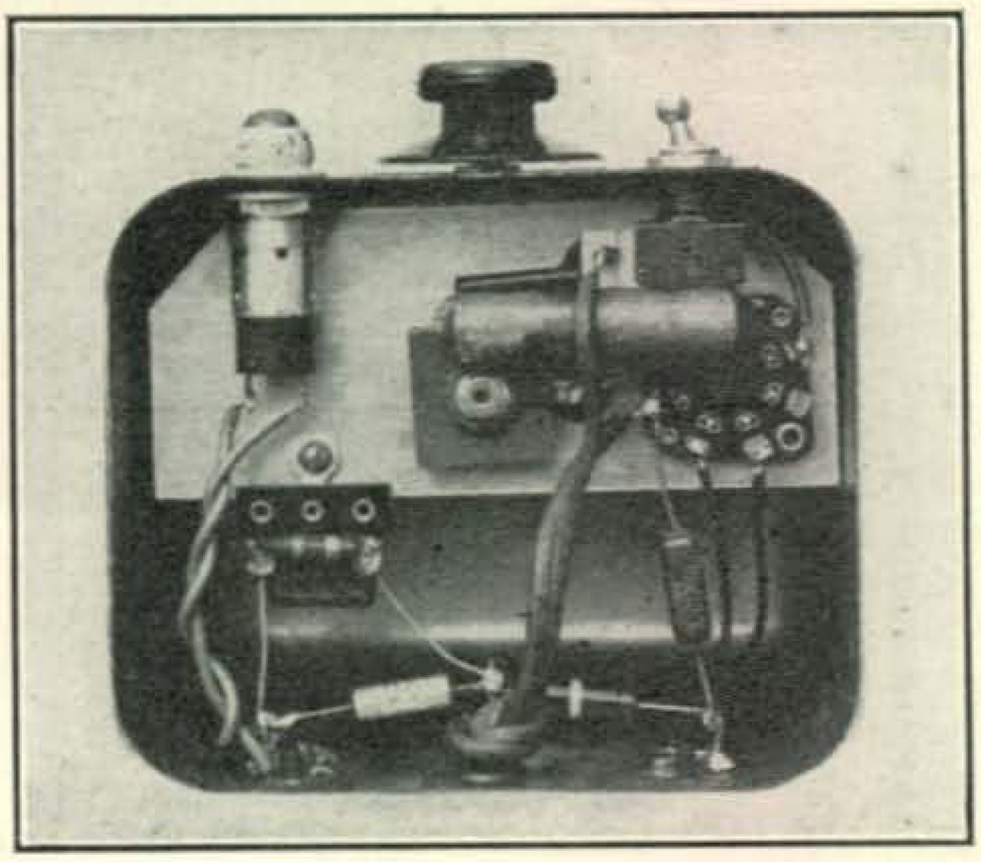

Placement of parts is not critical and physical layout may be altered to suit individual requirements.

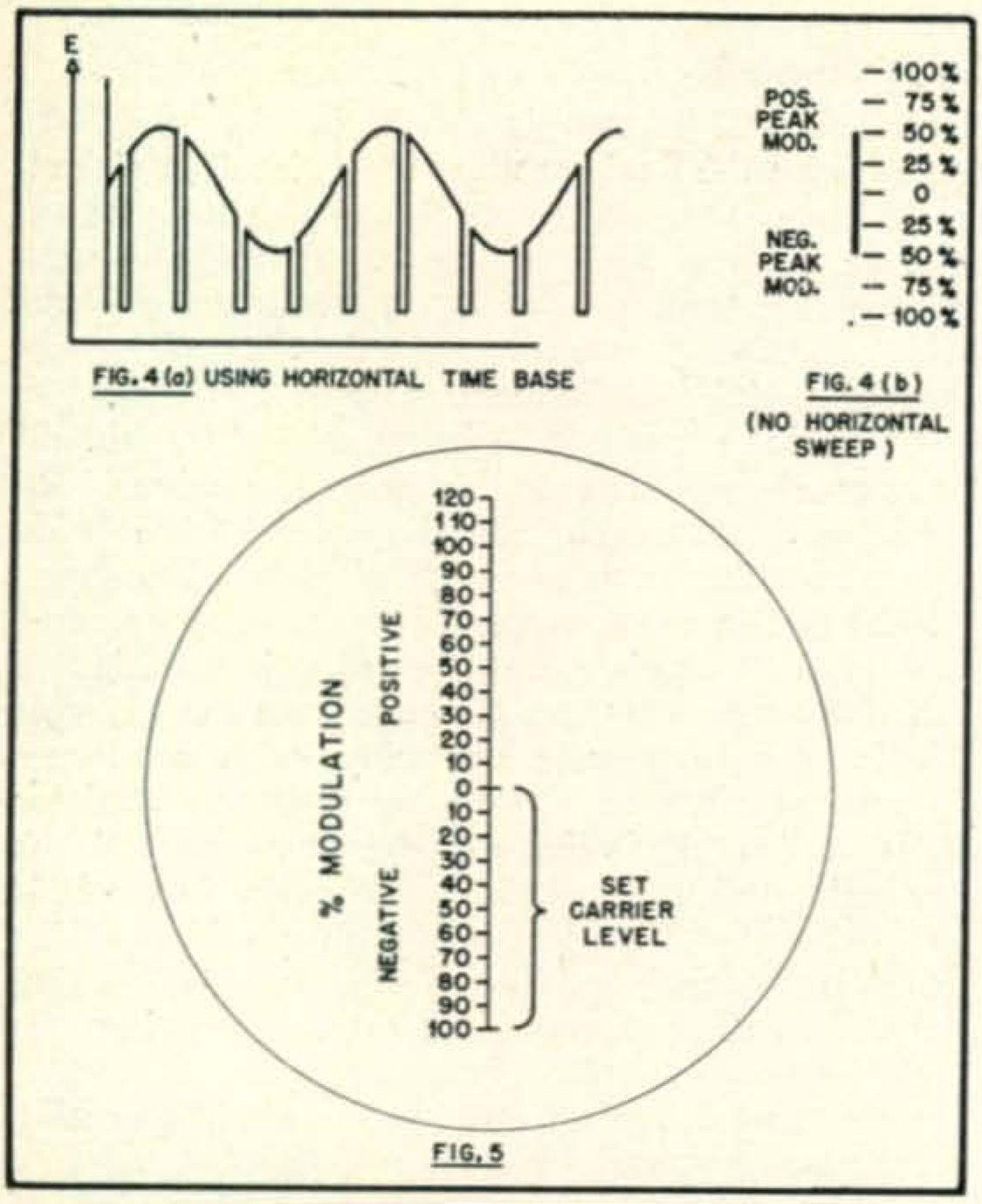

4. Incremental output voltage with (a) and without (b) a time base.

Fig. 5. Recommended CRO scale for measuring modulation envelope.

integral part of the transmitter. Short leads, good soldered connections, and the relay mounted in a vertical position with the pins down is all that is essential. The unit shown was built in a surplus transformer can 5¼" x 4¼" x 4¼". A shielded output cable to the CRO is recommended to prevent stray pick-up. The shielded cable should be short in order to avoid attenuation of h-f audio components or values of R_1, R_2, and C_1 must be modified (see footnote 1).

Installation and Operation

With the unit placed in operation and connected to a CRO, couple the input to the final amplifier tank until the pilot lamp shows about half brilliancy. With the transmitter modulator turned off and the CRO time base set to approximately 30 cps, increase R_3 until a series of negative pulses appear. Advance R_3 a few degrees beyond this point and then no further adjustment should be necessary. Turn off the CRO time base. The pattern will then be two vertical spots with perhaps a very faint trace between them. Adjust the centering and gain controls until the upper spot is on zero and the lower spot is on negative 100%. If there is hum on the carrier, which is modulation, it will not be possible to get a good upper spot. If you don't want to bother to eliminate the hum, then center the short heavy vertical line on zero.

With the modulator turned on and modulation applied, a heavy line will be seen to extend both upward and downward from the zero spot. If the modulation is symmetrical, the line will extend equally in both directions and the positive and negative percentage peak modulation may be read directly off the linear scale. No further adjustment is required as long as the carrier strength remains the same. Any change in either the carrier strength or CRO gain will be noted by shifting of the reference spots and may be readjusted with the CRO gain control.

The Shorting Switch

The shorting switch,[2] or relay, is the most important part in the equipment. It is strongly urged that either the relay specified or one of the mercury wetted contact type be used if satisfactory operation is desired. This relay has the appearance of a metal 6F6 tube and mounts in a standard octal socket. The three main requirements for a relay in this class of service are fast operation, low contact resistance, and freedom from bounce or chatter. This type of relay is the only type that meets the above requirements among those the writer has had the opportunity to test.

If the unit is to be used above 100 mc, it is recommended that the 1N38 crystal diode be used in place of the 1N34 as its frequency range extends to several hundred megacycles, according to the manufacturer.

Oscilloscope

The requirements for the CRO to be used with this modulation measurement equipment are moderate. They are reasonably good transient response, adequate frequency response up to the highest modulation frequency, and condenser input should be used. If the CRO does not have an isolating condenser, it may be added externally. The transient response of the CRO amplifier may be checked by shorting out the crystal diode and placing a 1½ to 6-volt battery across the input terminals of the modulation meter. Observation of the pattern will show whether "overshoot," phase shift, or "ringing" is present.

The calibrated scale may be one of the transparent rulers sold at most stationery stores or can be a "film positive" from a photograph of a drawing similar to the one shown in *Fig. 5*.

The action of the shorting switch may be considered as a "d-c restorer" or "clamp circuit" or as transforming the d.c. into a pulse or square wave, which the a-c amplifier can pass. This technique is useful in many other measurement problems involving small d.c., as well as incremental, voltages and currents. By a simple modification it can be used to provide a baseline for gain measurements in visual alignment systems.

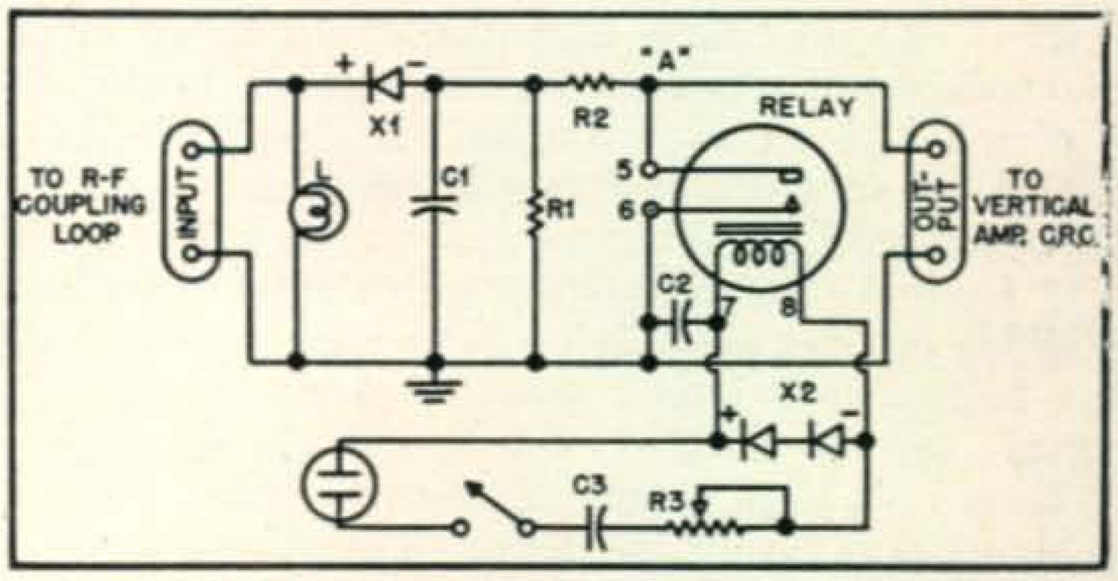

Fig. 6. Complete modulation meter circuit.

C1, C2—.005 μf.
C3—0.1 μf, 600 v.
R1—27K ohms.
R2—100K ohms.
R3—50K ohms, 1-watt pot.
L—General Electric No. 47 or equal.
X1—1N34 crystal diode.
X2—Selenium rectifier (Federal No. 402D3200 or equal).
REL—Western Electric Co. No. D-163781.



Here is the "modulation oscilloscope" sitting atop a neat looking transmitter at W6VRR. (Photo by W6RDR)

"What's the percentage?"

WILLIAM I. ORR, W6SAI

Contributing Editor, CQ

In conjunction with the anticipated publication of several 'phone transmitters, the staff feel that the description of a device to measure percentage of modulation is definitely called for. This easily constructed instrument can do the job with a minimum of extra components, and best of all, it does not need a high voltage power supply; it 'steals' it from the transmitter—Editor.

A famous philosopher once remarked that an over-modulation indicator would never become a popular piece of amateur equipment, unless it was designed to work in conjunction with a *receiver* instead of with a *transmitter!!* Use of a good over-modulation indicating device should be mandatory in many phone stations, but until such time as a receiver-operated over-modulation suppressor should become readily available, the following equipment design is offered to the readers of *CQ*.

A Simple 'Scope

The most painless way of observing the behavior of a phone transmitter is through the use of a 'scope coupled directly to the transmitter. So-called "on the air" checks, during which you ask Joe, "How's my modulation?" are practically useless. Unless Joe is plenty smart, knows his receiver, and knows just how to examine your signal, he will tell you that you "sound just fine, OM." (Even though you may be 100 kilocycles broad!) No sir; your best friend is your own judgment when you can answer "How's my modulation?" by having your own inexpensive oscilloscope modulation checker.

Preliminary Design

The appearance of the 5BP1 'scope tube on the surplus market for a few dollars makes the cost of building an oscilloscope very modest, indeed. The 'scope to be described uses just such a tube, and the instrument may be employed with any phone transmitter using plate modulation and an operating potential of 1000 volts or more on the modulated stage.

The 5BP1 is a five-inch cathode ray tube with a short persistence screen. Its operation is very simple in this little 'scope: Modulated r-f energy from the transmitter is applied to one set of deflection plates of the 5BP1 while audio voltage from the modulator of the transmitter is applied at the same time to the other set of plates. The 5BP1 produces an instantaneous picture of the relationship of the audio voltage to the r-f voltage. If all is well, this picture will be the well-known triangle at 100% modulation *(Fig. 1)*. This is exactly the picture we need for adjustments on the transmitter. Furthermore, if we apply a sine-wave signal to the transmitter we can obtain a reference pattern which may be used to observe how different adjustments affect the modulation of the transmitter.

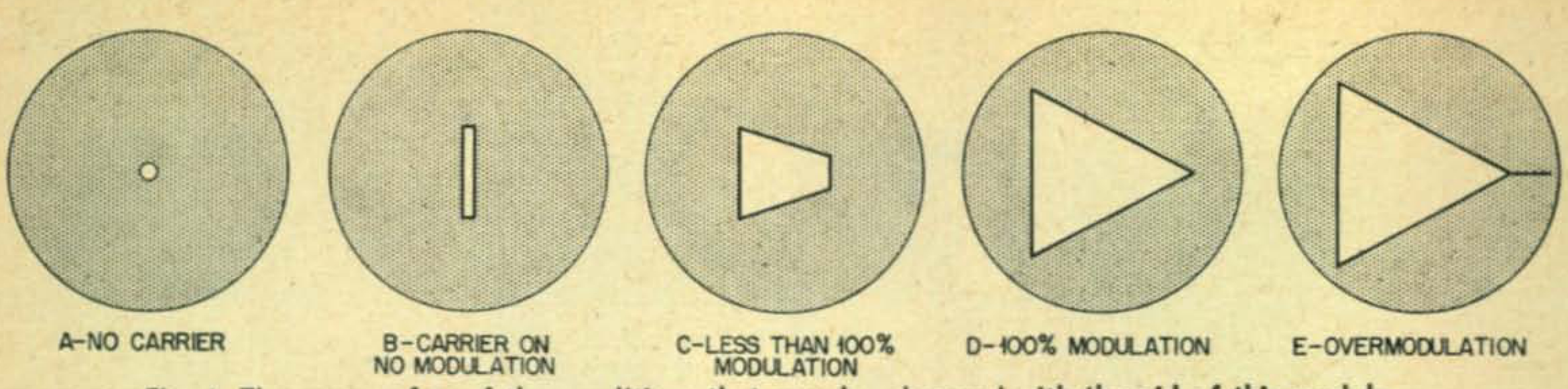

Fig. 1. These are a few of the conditions that may be observed with the aid of this modulation oscilloscope. Various other articles and books have been printed illustrating the identification of modulation defects from the appearance of the trapezoidal patterns.

The Circuit

Fig. 2 shows the circuit necessary to do the job. The 5BP1 tube receives its filament voltage from a small transformer *(T1)*; its plate voltage is stolen from the transmitter. Since the total current drain is only a milliampere or two the transmitter power supply will suffer no pain. *R1* and *C2* constitute a simple filter which irons out any ripple in the power supply. The focusing voltage (425 volts) and the brilliance voltage (20 volts) are both obtained from the transmitter supply by the bleeder string, *R1* through *R7*.

The comparison audio voltage is dropped to the correct value by means of a second bleeder string, *R8* through *R12*. Condenser *C1* is a high voltage blocking condenser. The width control *(R12)* is part of this bleeder string. The audio voltage is applied in correct proportion to the first set of deflection plates in the 5BP1 tube.

Note that the *width* and *focus* controls are at various high potentials above ground. They must be well insulated from the chassis of the scope. The filament circuit is also "hot" by about 50 volts.

The r-f signal stolen from the transmitter is applied to a tuned circuit, *L-C*, resonated to the operating frequency of the transmitter. The r.f. is applied in "push-pull" to the second set of deflection plates of the 5BP1. Since all the deflection plates must operate at the same d-c potential level, *L-C* must operate at the full value of the tube voltage. Care must therefore be given to the insulation of the coil and condenser. The remaining condensers insure that the r-f does not go wandering about in the innards of the scope.

Mechanical Layout

There are two possible and highly practical layouts for the scope. The first layout is to use a commercial cabinet, such as the *Bud CA-1126 amplifier chassis and dust cover,* with the tube mounted

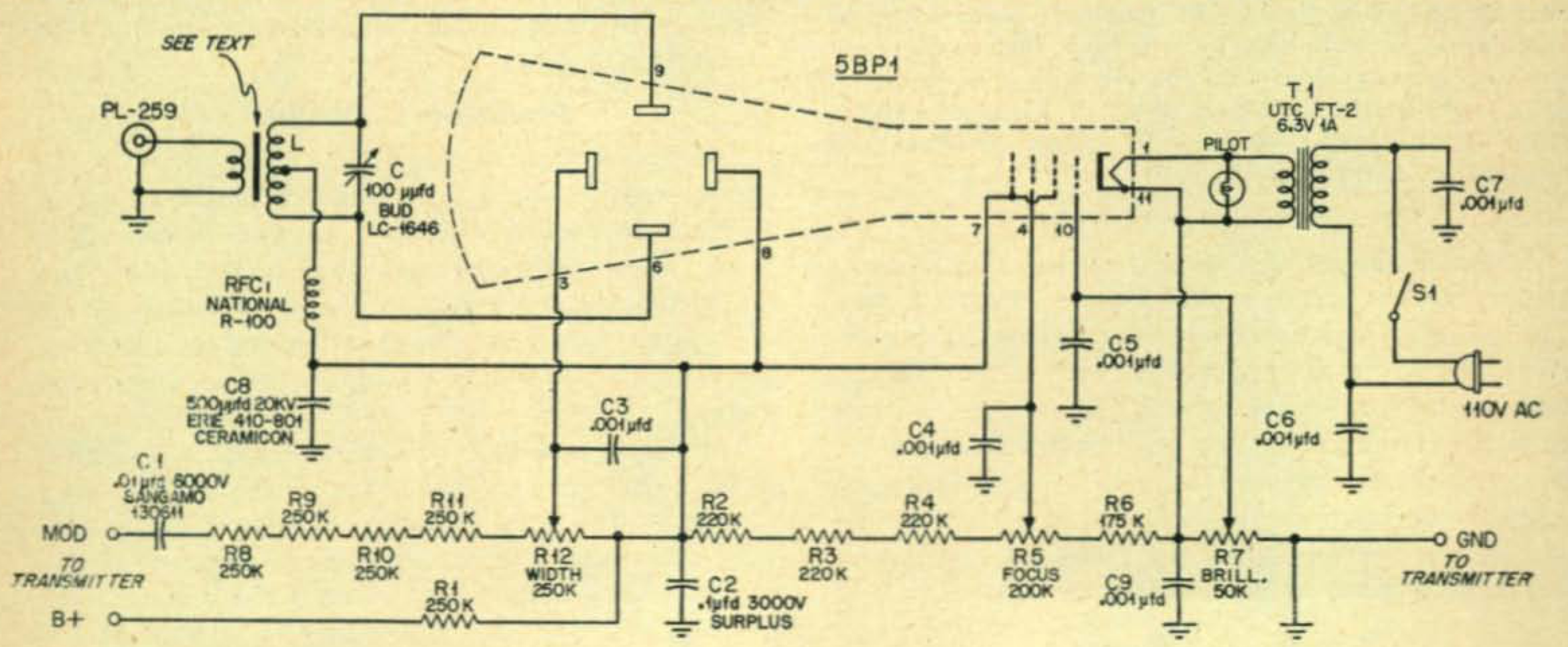

ALL BYPASS CONDENSERS ERIE CERAMICON 801-001 UNLESS NOTED
RESISTORS, IRC TYPE BTB 2 WATT INSULATED COMPOSITION TYPE
POTENTIOMETERS, CENTRALAB "BLUE SHAFT" TYPE, C1 TAPER
SOCKET FOR 5BP1, MAGNAL SIZE EBY S-20-11
SAFETY TERMINALS-MILLEN 37001

Fig. 2. Wiring schematic and parts list.

C—100 µµfd. variable, Bud LC-1646

C1—0.01 µfd., 6000, volts working, Sangamo 130611, or equivalent.

C2—0.1 µfd., 3000 volts working

C3, C4, C5, C6, C7, C9—0.001 µfd. mica

C8—500 µµfd. 20,000 volts working, Erie 410-801

L—see text

R1, R8, R9, R10, R11—250,000 ohms, 2w.

R2, R3, R4—220,000 ohms, 2w.

R5—200,000-ohm potentiometer.

R6—175,000 ohm, 2w.

R7—50,000-ohm potentiometer

R12—250,000-ohm potentiometer

T1—fiilament transformer, UTC FT2, or equivalent

lengthwise (*Fig. 3*). All controls are mounted on on the chassis base, and connections to the 5BP1 tube are made with high voltage insulated wire, run through a large grommet at the rear of the chassis.

A second layout (known as the cheap and dirty approach) makes use of the black-crackle aluminum box from the war surplus *Antenna Loading Unit BC-306A*. Luckily, this box is *just* the right length for a 5BP1 tube! The 5BP1 mounts lengthwise in the box, the erstwhile bottom of the *Tuning Unit* now becoming the front panel of the modulation oscilloscope. The fluorescent face of the cathode ray tube projects through a hole cut in the "bottom" of the box. The tube socket is mounted in the "top" of the box. A *Bud CU-883 Utility Cabinet* is placed over the back of the socket as protection against shocks. This arrangement provides a rugged and neat package at a low price.

This layout is shown in *Fig. 3*. All components are mounted inside the box and no chassis is used. The two holes for the 5BP1 (socket hole and face hole) must align axially with each other so that when the box is assembled the tube may be placed in the socket by inserting it through the face hole in the front of the box. This face hole is cut slightly larger than the tube to allow room for a shock ring to be placed around the tube. This ring is made of a length of plastic tubing that is slit lengthwise and slipped over the rim of the panel hole, thus providing a soft shoulder against which the tube may rest. The various controls are located symmetrically in the corners of the front panel. The potentiometers are mounted near the rear of the box on insulated brackets and are connected to the panel knobs with short lengths of ¼" bakelite shafting and shaft couplers. Typical mounting brackets for the potentiometers are shown in *Fig. 4*.

To prevent the a-c field of the filament transformer from affecting the picture, the transformer is mounted behind the 5BP1 tube on the outside of the box.

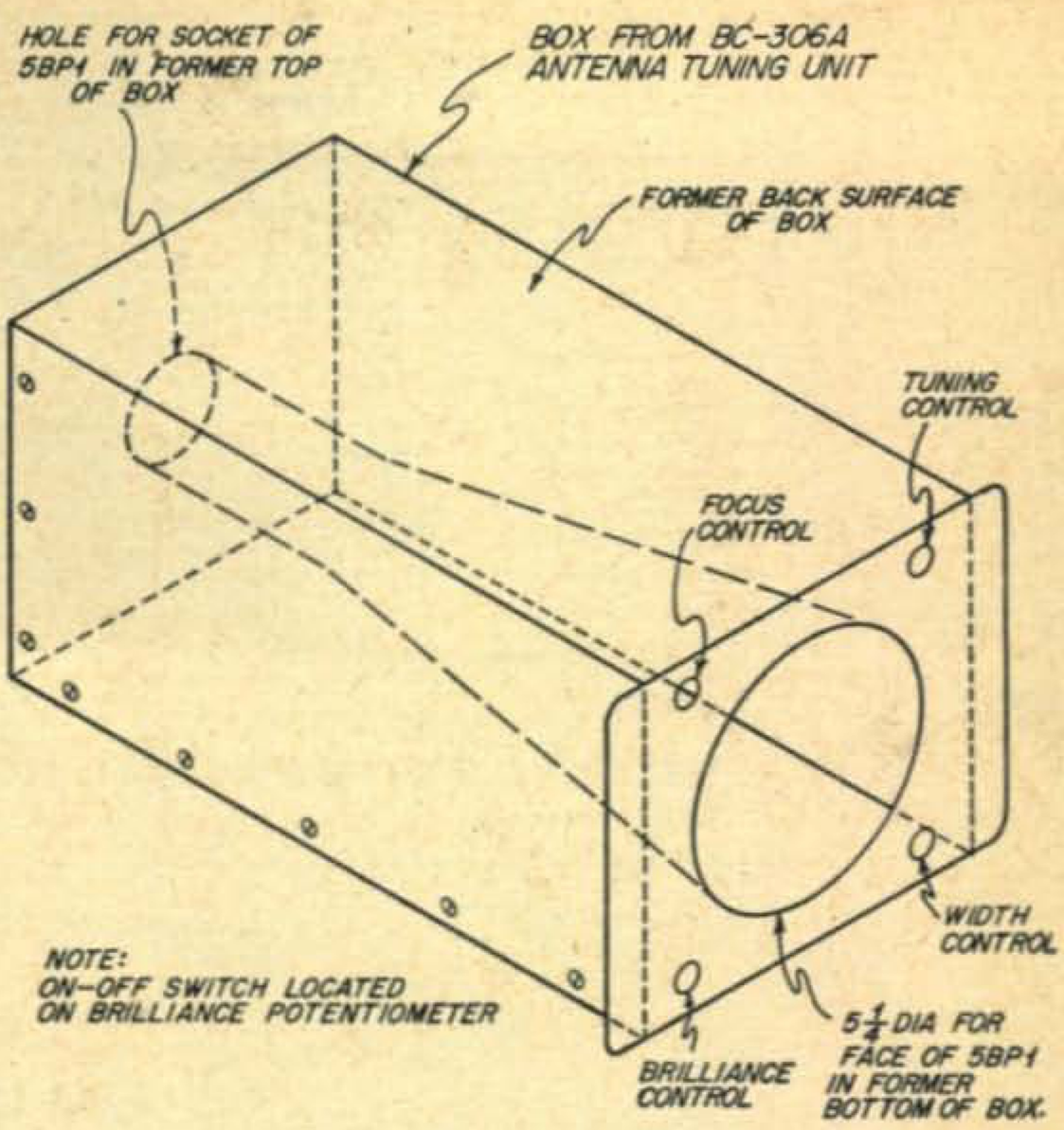

Fig. 3. This is the approximate layout using a surplus cabinet from a BC-306A unit.

Using a Commercial Chassis

For a more finished appearance the *Bud CA-1126* chassis and dust cover should be employed. The parts layout in this case will be considerably different, since the components may be mounted on the underside of the chassis, rather than hung inside a box as in the case of the previously described BC-306A cabinet. If you do not mind the extra cost, the *Bud* box adorned with a pair of handles from an extinct TU-5B tuning unit makes a very professional appearing job.

A glance at *Fig. 5* showing the underside layout of the chassis, will give you a pretty good idea of how the assembly should be handled.

Referring to *Fig. 5:* All panel controls are mounted on two bulkheads. These bulkheads are just long enough to reach from side-to-side of the chassis, and shoud be about ⅛" thick. They may be made of micarta or bakelite. They are fastened to the side of the chassis with small angle brackets of the ten cent store variety. *Bulkhead #1 mounts R7, R12* and *C*. These three controls are spaced 2½" center-to-center, leaving just about one inch between the outside controls and the edges of the bulkhead. *Bulkhead #2* is the same size as #1 and mounts *R5* and *S1*. These two controls are mounted 2½" apart leaving 2¼" between the controls and the outside edges of the panel. Three additional holes must be drilled in line with the controls of *bulkhead #1* to allow their shafts to pass through *bulkhead #2*. Metal shaft couplers and bakelite extension shafts are put on all controls. One-inch knobs are used on *R7, R12* and *C*. Pee-wee ½" knobs are used on *R5* and *S1*. They provide ample manipulation space for the controls on the front panel.

The modified *MCL* coil is mounted on the side of the chassis just behind *C*. Directly behind it is

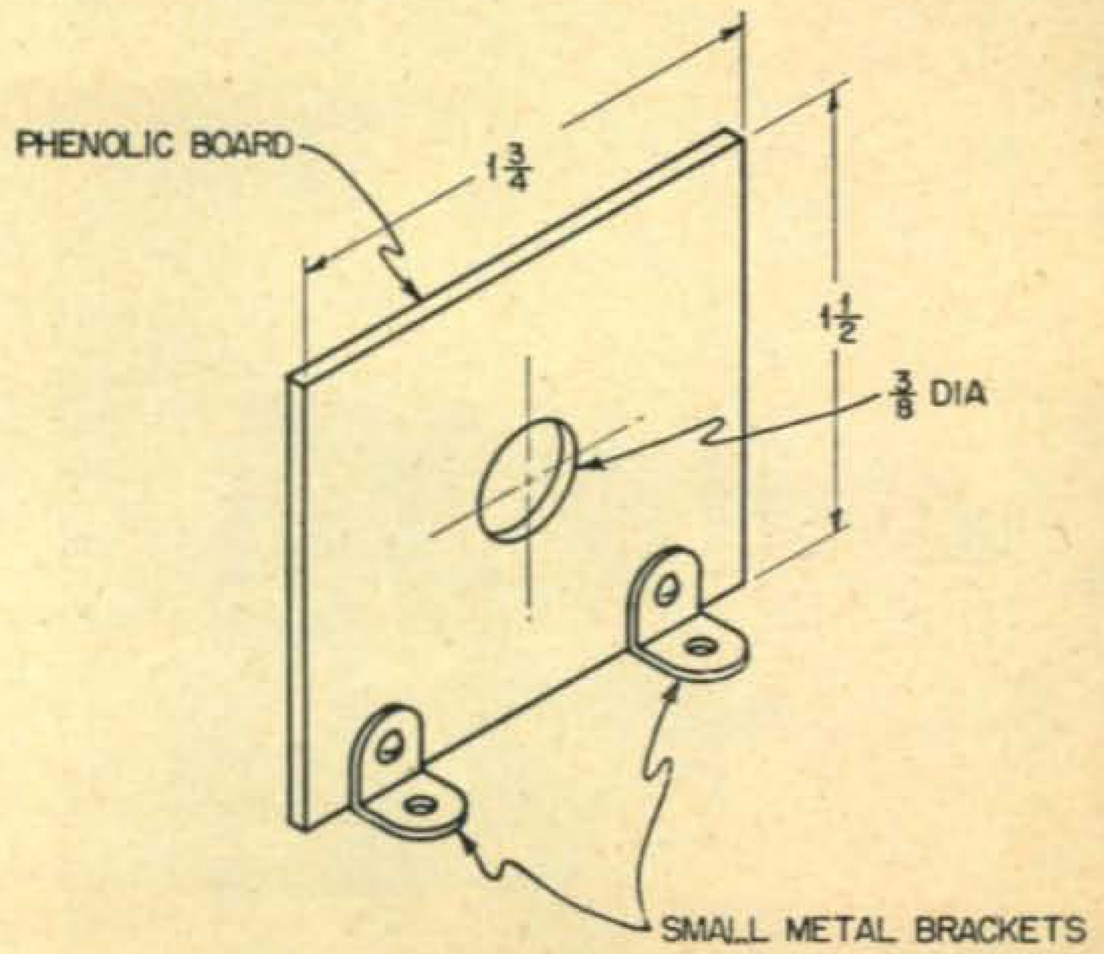

Fig. 4. Insulated potentiometer mounting bracket. If the BC-306A cabinet is used several of these are required for the potentiometers.

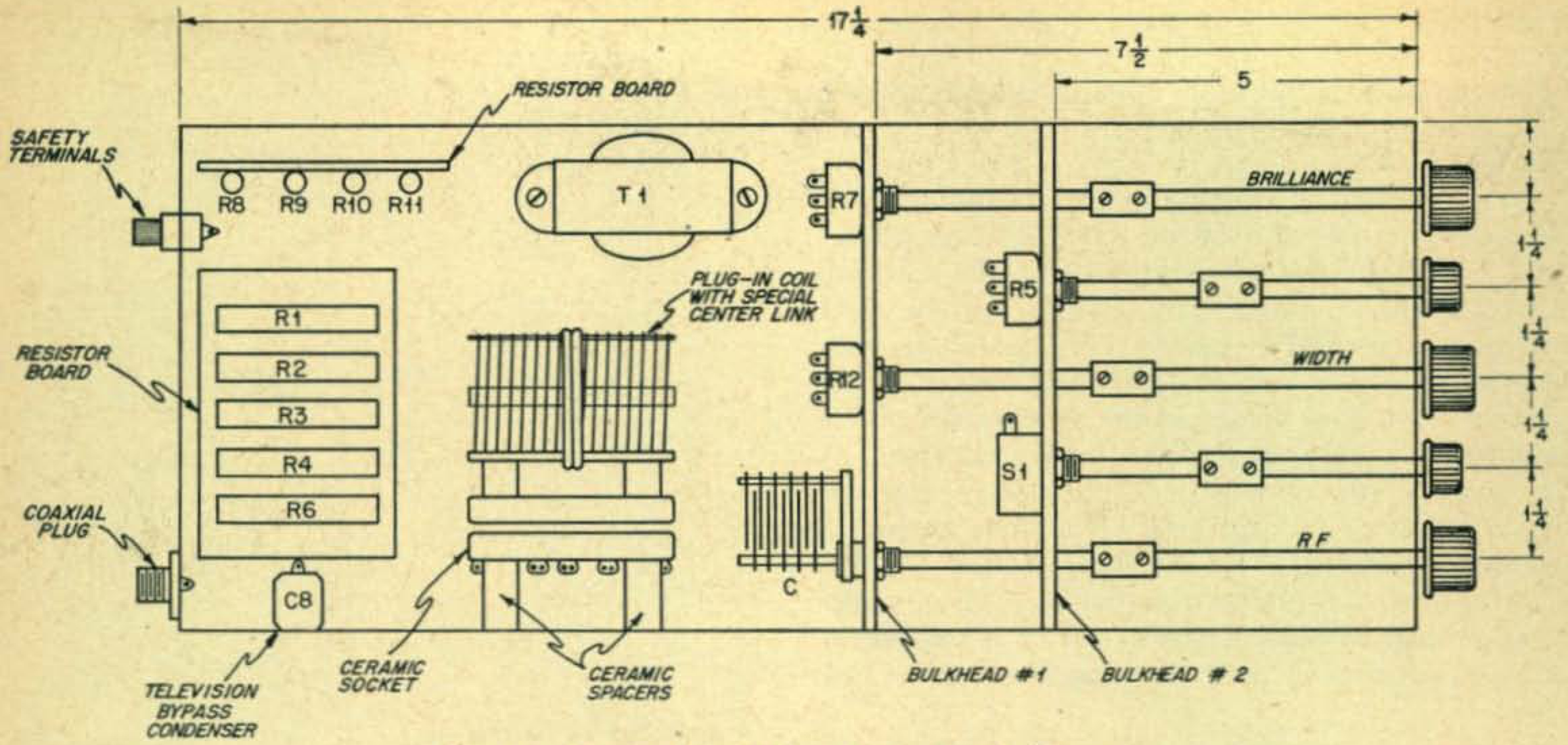

Fig. 5. Bottom view of the chassis layout using a BUD model CA-1126 chassis.

the 20-kv television type high voltage bypass. The SO-239 coaxial receptacle is mounted on the rear chassis wall behind the bypass condenser; the filament transformer directly behind control *R7*. The remaining space beneath the chassis is taken up with the two resistor boards. The placement of these boards will depend slightly upon the physical size of the boards. From a layout point of view, it is best to make the boards out of small pieces of micarta or bakelite. The terminal boards available on the market have too many mounting lugs located in the wrong places. These boards, as well as the ceramic coil socket, should be mounted on short ceramic insulators to space them away from the metal chassis. *C2* can be a base mounting, metal can type condenser and may be placed in any free space that is left.

Figure 7 shows a disassembled view of the scope from the side. The *CU-883* box is bolted to the chassis at the rear, with the length of the box running vertically. The cathode ray tube socket is mounted on the rear wall of the box, and a hole is cut into the front wall of the box large enough to clear the neck of the cathode ray tube. The box contains no parts; it merely serves as a support for the 5BP1 socket. The placement of the box on the chassis is determined by the length of the cathode ray tube and by the distance it projects out of the front end of the case. In my case, the face of the tube projects out from the case about ½". The tube is 16½" long from the face to the bottom of the base; therefore, the mounting socket must be 16" back from the front edge of the scope face. A split piece of insulating tubing is ringed around the front mounting hole for the 5BP1 as a protection against shocks.

It should be noted that condenser *C3* should be mounted on the 5BP1 socket directly between *pins 3* and *8*.

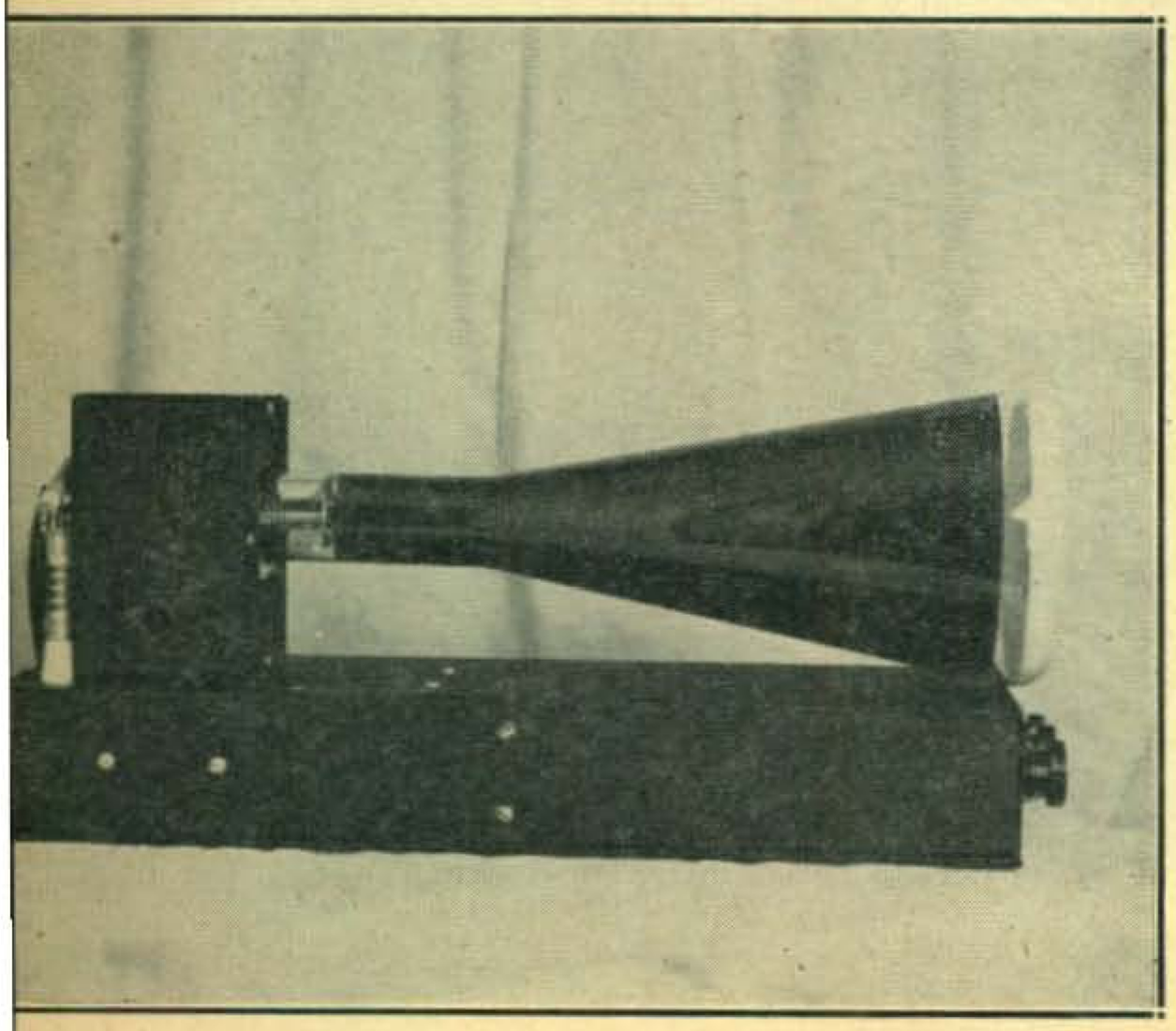

Fig. 7. View of the oscilloscope showing the mounting of the tube. The face projects through and is supported by the front of the chassis cover. The r-f choke which is visible in the photograph was used merely for tests and is not required in actual operation.

Safety First!

These general remarks apply to either of the two types of construction.

1. The tuned circuit is as hot as a bandit's pistol—some one thousand to two thousand volts above ground. A few important steps must be taken to protect the operator and the scope itself from the effects of a flashover from the hot coil to the link or to the chassis. A standard 25-watt plug-in coil may be used for L, such as the B&W MCL series coils. The coil should be mounted in a ceramic socket that is fastened to the wall of the chassis with two ceramic insulators, about one inch tall.

   A flashover from the coil to the link would burn out R1 and RFC1. It is mandatory that

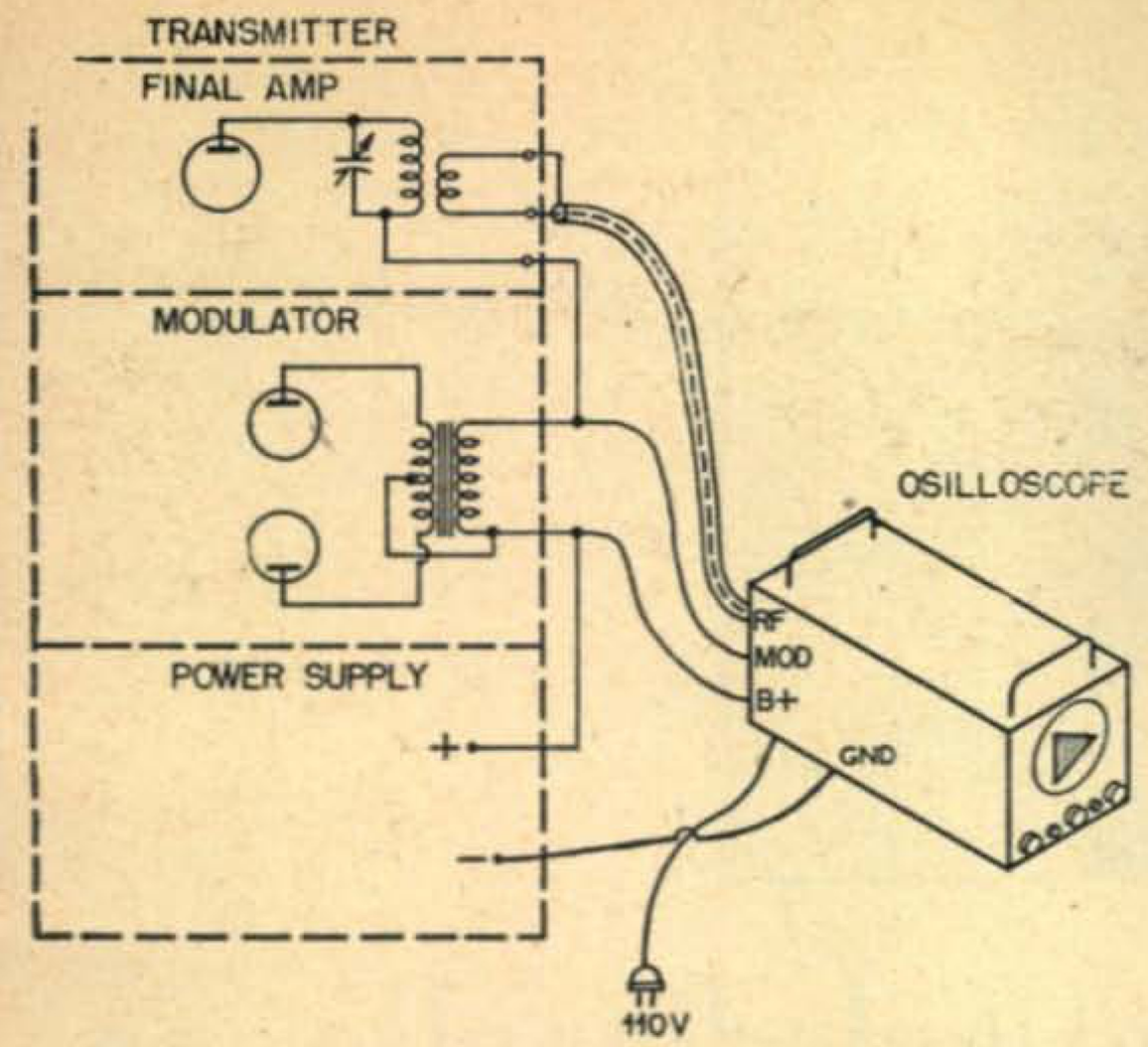

Fig. 8. Simplified sketch of the method of using the modulation oscilloscope.

one side of the link be grounded for safety's sake, so a slight modification of the coil is necessary in order to protect these other components. The center link of the MCL coil should be removed and a substitute link made from a length of the 8869 high voltage wire. The new link is wound over the center of the coil in place of the old link, and cemented into place.

2 The voltage dividers are mounted on phenolic boards that are spaced away from the chassis on ceramic insulators. All high voltage wires passing thru the chassis should go thru heavy rubber grommets so that the wires cannot chafe on the edges of the hole. As a last protection, Millen 37001 Safety terminals should be used for high voltage connections.

Operation of the Oscilloscope

When the unit is completely wired, a high reading ohmmeter should be used to trace out the circuits to check for wiring errors. 110 volts a.c. should then be applied to the filament primary circuit and the unit turned on. If the tube and pilot lamp light, the scope is ready for preliminary adjustment.

The two high voltage leads to the transmitter should be connected across the secondary of the modulation transformer, as shown in *Fig. 6.* The lead marked "B Plus" should go to the power supply side of the modulation transformer, and the lead marked "Modulation" should go to the side of the transformer connected to the modulated r-f stage. These leads may be permanently attached to the transmitter. Be sure the transmitter is OFF when these connections are made! The "Ground" lead is clipped to the "B minus" of the transmitter. (*Fig. 8*).

Next, a short length of coaxial line such as RG-59/U or RG-8/U with a matching PL-259 plug on one end is connected to the SO-239 receptacle on the scope. A small two turn link is placed at the other end of the line and loosely coupled to the final amplifier plate circuit of the transmitter. The transmitter is now turned on, applying the full plate voltage to the scope. The *Focus, Brilliance* and *Tuning* controls of the scope are adjusted to produce a vertical line on the tube about two inches in height. If the line is not high enough, a bit tighter coupling to the plate coil of the transmitter may be indicated. It may also be necessary to rotate the socket of the 5BP1 tube slightly to position the line vertically with respect to the cabinet of the scope. When measured with a vacuum-tube voltmeter or a high resistance voltmeter the voltage on the arms of the *Focus* and *Brilliance* controls should be in the region of 400 volts and 20 volts respectively. If the line is fogged or seemingly out of focus, it may be that r.f. is appearing in places where it should not be. If the bypassing in the circuit is carefully followed, this should not happen. In one instance, a particular scope utilizing a slightly different layout from those shown needed a 2½ mh. r-f choke and a 100-$\mu\mu$fd 3000-volt mica bypass condenser connected as a filter in series with the lead from the *Width* control to *pin 3* of the 5BP1. This is something to keep in the back of your mind if you run into any r-f troubles.

With some audio applied to the transmitter (a whistle will do), *R12* (*Width*) is adjusted until the familiar trapezoidal pattern appears. By adjusting *R12, C,* and the link coupling to the transmitter, an excellent pattern can be obtained. The scope may be left connected to the transmitter as a permanent part of the station equipment.[1]

Interpretation of the scope pictures that may be obtained under various conditions cannot be covered in this short article. The various handbooks cover this subject, as do many technical books on oscilloscopes. The reader is referred to these publications for additional information.[2]

1. For operation of the oscilloscope at plate potentials of less than 2500 volts, it is necessary to remove the dropping resistor, R1.
2. An article by J. H. Owens, W2FTW in the Jan.-April, 1948 issue of the "RCA Ham Tips" shows a number of patterns similar to those obtainable with this unit. These were published in conjunction with the "RCA 'Ray Gun Monitor."—Tech. Ed.

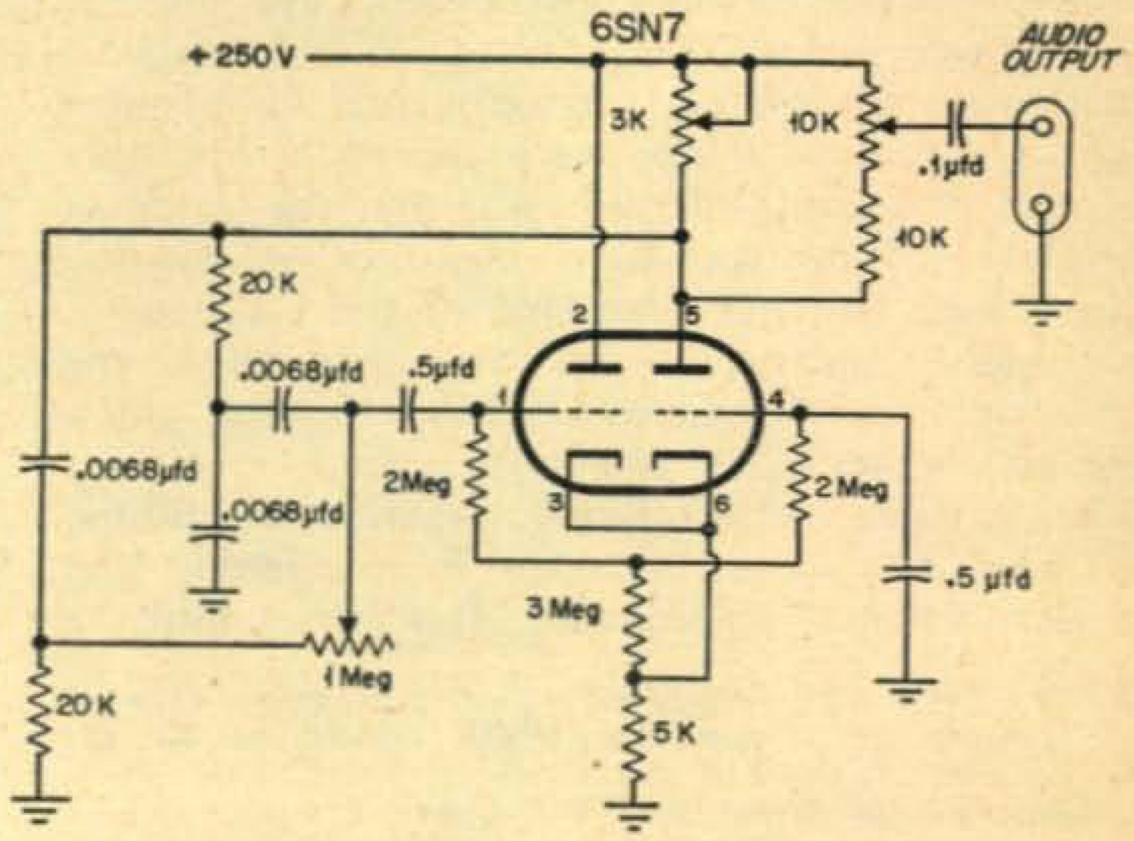

In order to obtain an audio signal of constant amplitude a simple sine-wave oscillator is needed. The circuit shown above is reprinted from the RADIO HANDBOOK (12th and 13th Editions, by permission, Editors and Engineers, Ltd.). The 1-megohm control varies the frequency, the 10,000-ohm potentiometer controls output level and the 3000-ohm potentiometer adjusts output for best low frequency waveform.

Presenting the 'Moniscope'



C. O. BISHOP, W7HEA

207 E. Toppenish Ave., Toppenish, Wash.

A Device for Continuous Transmitted and Received Signal Monitoring

In order to relieve congestion on our phone bands and to comply with FCC regulations, we must attempt to put on the air the cleanest possible signal. And a phone signal, to be arm-chair copy, must be well modulated with audio of the best *speech* quality. You may have read articles in the past about the techniques of getting good restricted audio quality by means of clipping, filtering, limiting, and just plain listening to the signal. But the quantity of audio present on the carrier is also an important factor in achieving good communication. We are, therefore, going to discuss the percentage of modulation as a means of improving the conditions on our crowded phone bands, or a method of continuously *observing* the amount of audio with respect to r.f.

Various Monitoring Methods

Hams have devised many methods of observing modulation percentage, ranging from watching the class B meter to listening to the groan of some transformer or choke in the rig. While any of these indicators are better than none a all, they still leave something to be desire when a definite and accurate indication of the amount of audio on the carrier is to be determined.

The only device that will give continuous and instantaneous indication of the modulation percentage is the cathode ray tube. Some transmitters use the CRT as a built-in monitor: this is the ideal method, but in many cases the oscilloscope is a complete unit, and, after the initial tests have been made on the new rig, it is placed back on the shelf to gather dust.

There are a number of drawbacks to the use of an external oscilloscope for constant monitoring when connected directly to the transmitter. Three of the most unfavorable drawbacks are: (a) when a trapezoid pattern is desired, it becomes necessary to bring out high voltage for the horizontal sweep, (b) when the transmitter is in stand-by condition, the fixed spot (due to the removal of the horizontal sweep) may cause a burn on the screen, and, (c) when more than one transmitter is in use, either more oscilloscopes must be in operation or the one must be moved from rig to rig.

One very common question on the phone bands is, "How is my modulation?"—a difficult one to answer with any degree of accuracy. With the idea in mind of answering that question accurately, and to eliminate the need of asking it ourselves, we developed the "Moniscope." With it, you continuously know your own modulation percentage and have available an accurate report on any received signal. You may form either a trapezoid or wave envelope pattern at the flick of a switch—for both transmitted and received signals. While transmitting, the modulation percentage of the transmitter is on the scope; when the transmitter is turned off, immediately and automatically the received signal is present. There are no switches or

relays to operate and no connections to the transmitter. There is one connection to the receiver—but more about that later.

The Circuit

Looking over the circuit diagram, *Fig. 1*, we see that *L1, L2* and associated parts form the conventional phone monitor. With headphones connected at *J1* the signal can be monitored in the regular manner. By means of band switch *S2, L2* gives continuous coverage from 3.5 to 60 Mc. *L1* is the antenna coil, and a length of wire attached to terminal *TRANS* and draped near the transmitter will pick up plenty of r-f signal for our purpose. Condenser *C4* acts to shunt *L1* and gives some degree of control over the signal being coupled to the tuned circuit *L2/C5*. The 6C4 is used as an infinite impedance detector giving good linearity over large values of signal voltage with very light loading on the tuned circuit. The r-f voltage for the vertical deflection of the CRT is taken from the grid terminal of the 6C4. With *S3* in the *T* (trapezoid) position, and audio applied to the horizontal deflection plates we have the trapezoid pattern. Placing *S3* in the *W* (wave) position, 60-cycle sweep voltage is used for the horizontal deflection and the wave envelope pattern is present.

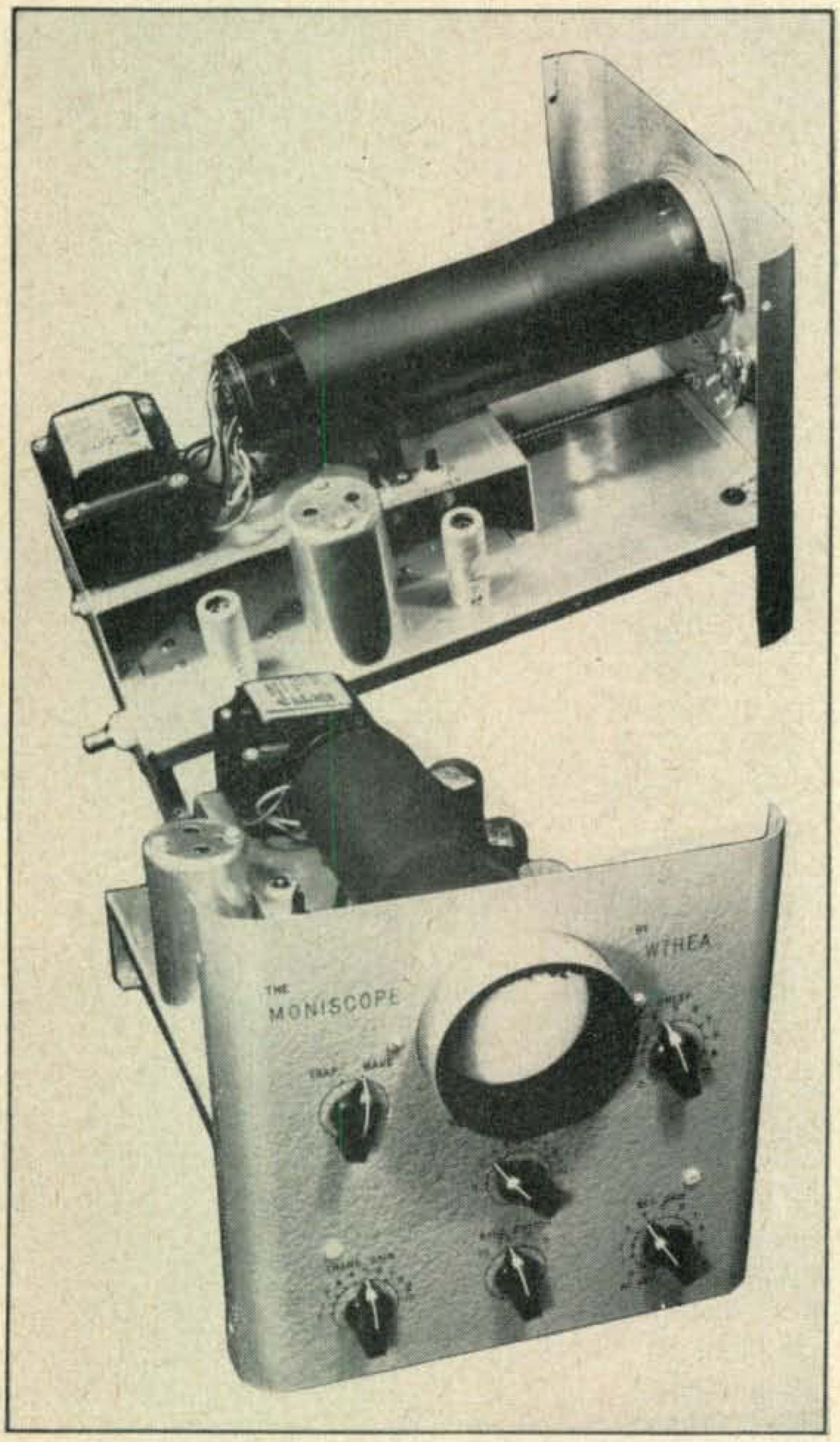

This composite view shows the location of some of the components mounted above the chassis. The controls on the deck include both focusing potentiometers and the cathode ray intensity control. The extension shaft directly under the tube is for C5.

What about that 6BA6 and *T1* combination? Well, that is how we get the low down on the other fellows signal! A length of co-ax cable runs from point *RCV* for the purpose of sampling the receiver i.f. at the diode plate of the second detector. The 6BA6 is an additional stage of i-f amplification. *T3* is a standard replacement i-f transformer of the same frequency used in the communications receiver. The secondary of *T3* and *L2* are connected in series. Due to the wide difference in the resonant frequencies between *T3* and *L2* there is no interaction and we have automatic pattern changeover without switching. Potentiometer *R3* serves as a r-f gain control for signals coming from the receiver.

There is nothing critical about the CRT and power supply shown here. Condenser *C9* is necessary to bypass r.f. from the horizontal deflection plates. If a standard oscilloscope is used it may be necessary to add network *C9/R11* to clean up the trace on the tube. Keep the lead from the grid of the 6C4 to the vertical deflection plate as short as possible and *DO NOT SHIELD IT*. Any added capacity will affect the tuning range of *L2/C5* combination.

Putting it into Operation

To place the *Moniscope* in operation it will be necessary to make one connection inside the receiver. A small 3-30 $\mu\mu$fd. mica compression padder is connected to the diode plate of the second detector. This condenser must be connected as closely as possible to the diode terminal to minimize disturbance to the i.f. alignment of the receiver. A length of co-ax cable (RG-59/U) runs from this condenser to a coaxial fitting mounted on the rear of the receiver chassis. This terminal not only serves as a convenient connection for the *Moniscope* but can serve as an i.f. sampling point for future needs.

Make the necessary connection between the receiver and *Moniscope*. Turn both on and tune the receiver to a point where no signal is being received. Place *S3* in the *W* position and set the 3-30 $\mu\mu$fd. trimmer added to the receiver at maximum capacity. Now adjust the trimmers of *T3* for maximum indication of noise or "grass" on the face of the CRT. *R3* should be set at the point of maximum gain for this adjustment. After *T3* has been adjusted to the same frequency as the receiver i.f., place switch *S3* in the *T* position and decrease the capacity of the 3-30 $\mu\mu$fd. trimmer until the background noise creates about a one-half inch trapezoid. Only a very small amount of capacity will be needed to couple plenty of signal into the *Moniscope* from the average receiver.

There is considerable gain in the 6BA6 stage and the receiver i.f. is only slightly affected. A little touching up of the last i-f trimmers in the receiver will take care of any misalignment. You are now in business from a receiving standpoint. Tune in a few commercial broadcast stations to see just what patterns to expect.

Connecting to your Transmitter

Getting set to monitor your own transmitter is still easier. You merely set condenser *C4* at maximum capacity and run a wire from post *TRANS* to a point near the transmitter or feed line. Set *S2* to the proper band, turn on the transmitter and tune *C5* for maximum indication on the CRT. Vary the position of the pick-up antenna until the vertical part of the pattern occupies about one third of the scope. Secure the wire and from now on any changes in signal pattern height will be controlled by condenser *C4*. Since its action is rather limited some experimenting may be necessary to get the desired pickup from the transmitter. It is a good idea at this time to turn on everything except the final stage of the transmitter and ascertain that no r.f. from the exciter and multiplier is getting into the *Moniscope*. This r.f. will not be modulated—or at least it shouldn't be. If any is present, it will be impossible to see your point of negative peak modulation. If exciter r.f. is present, re-position the pickup antenna until no r.f. is being picked up, before attempting to make an accurate check of the transmitted signal.

Now that your *Moniscope* is tuned up and connected to the receiver, this is what you should expect to see on either a transmitted or

Fig. 1. Parts list and wiring diagram.

C1, C9—100 μμfd.
C2, C3, C7, C8—0.01 μμfd.
C4—35 μμfd. variable
C5—140 μμfd. variable
C6—250 μμfd. variable
C10, C11—15-15/450 electrolytic
C12, C13—0.05/1600 auto radio buffer condensers
R1, R9, R11—1 megohm, ½w.
R2—100 ohms, ½w.
R3—10,000 ohm variable with off-on switch.
R4—39,000 ohms, ½w.
R5, R13—100,000 ohms, ½w.
R6, R17—50,000 ohms, ½w.
R7—5000 ohms, 5w.
R8—3000 ohms, 1w.
R10, R14, R15—500,000 ohm variable
R12—50,000 ohm variable
R16—250,000 ohms, ½w.
T1—6.3v filament transformer
T2—325-325 v.a.c. 70 ma., 5v. 3 amp., 6.3 v.c.t., 3.5 amp. (Merit P2951).
T3—Output type i-f transformer, same freq. as your receiver.
L1, L2—B&W Miniductor 3015 with L1 cut off at the 6th turn, balance tapped at 1st, 4th and 12th turns.
S2—4 pole, single throw switch, rotary.
S3—s.p.d.t. switch, rotary.

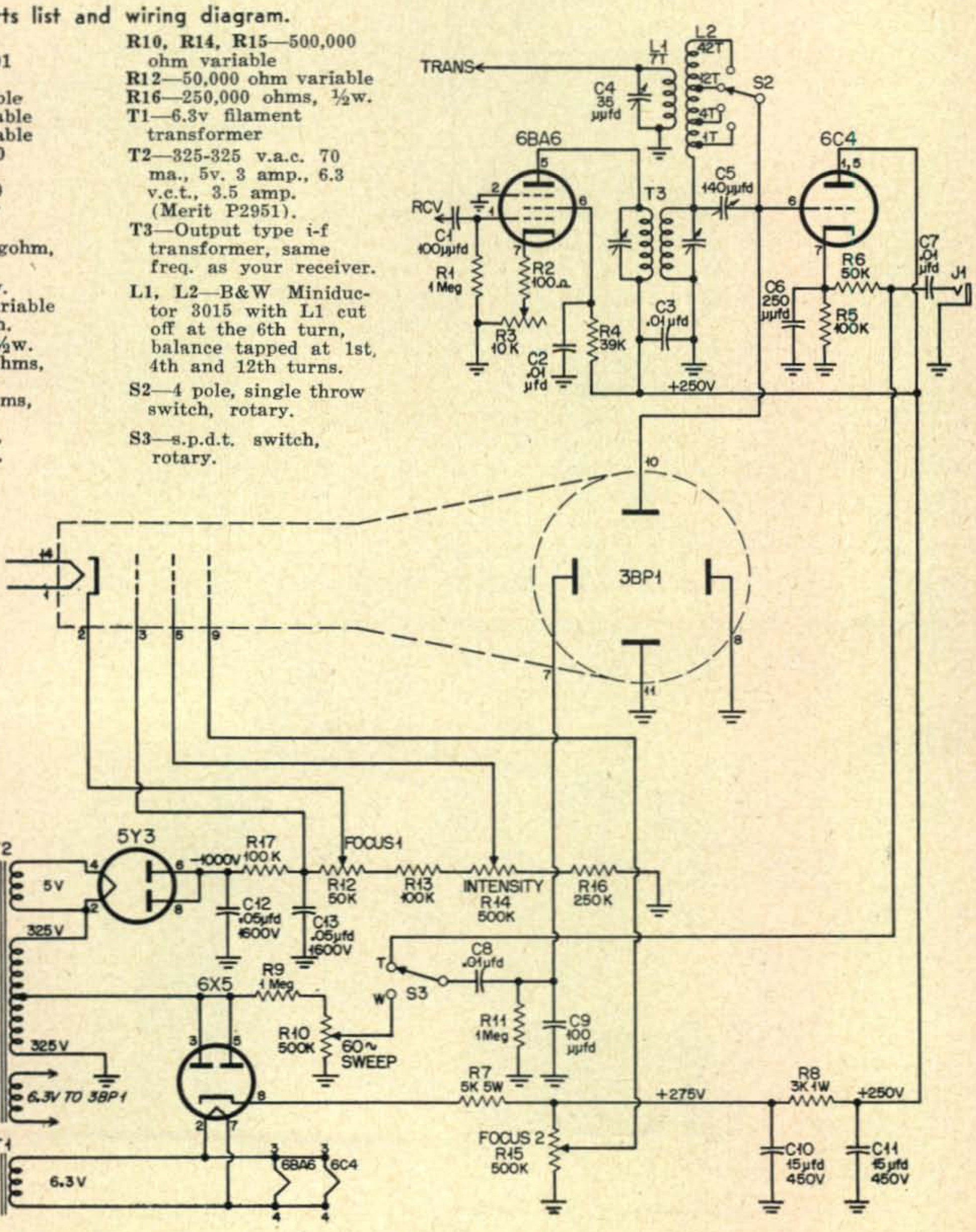

received signal. When observing a trapezoid pattern under modulation, the modulated carrier should be twice as high as the unmodulated signal, assuming for the moment that the positive peaks and the negative peaks are equal and the carrier is being modulated at 100% level. Any increase in audio beyond this point will cause a distinct brightening of the tip of the trapezoid and indicates overmodulation on the negative peaks. If the carrier does not double in height then there is a non-linear effect in the transmitter. When using a negative peak clipper it should be impossible to bring the pattern on the scope down to a sharp point where the negative peak clipping action takes place. Of course, insufficient modulating power will give the same indication, but the carrier will not double in height.

Any published information on transmitter testing using an oscilloscope may be duplicated with the *Moniscope*—plus the added advantage that received signals can be given the same treatment. The trapezoid and wave envelope patterns present the same information in a different manner and it is sometimes easier to interpret this information more accurately on one pattern than on the other. Your ability to get the most information from the pattern comes only with experience in using the *Moniscope* and since any received signal can be analyzed, much information can be obtained on what to expect from your transmitter by looking at other signals.

Construction is Easy

The parts layout and method of construction are clearly shown in the various chassis view photographs. No further construction details will be given since the chassis and cabinet used for the *Moniscope* are specially designed and similar to those used in the construction of *Snoopers*.[1] Needless to say, any comparable layout with existing cabinets and parts should work equally well as no critical components have been used. The *Bud* streamlined scope cabinet *CU 1991* is a readily available foundation unit for the construction of the *Moniscope*.

Existing scopes and monitors may be used with good results although it may be necessary to add bypassing to the horizontal and vertical plates of the CRT to prevent r.f. from entering the tube. R.f. leaking into other than the desired scope tube elements will cause a distorted pattern to appear on the tube face. A little experimenting with a few 100 $\mu\mu$fd. condensers around associated circuits should remedy this trouble. If the scope has deflection amplifiers, these should not be used. Make the connections directly to the deflection plates, otherwise a true picture of the signal under observation will not be presented.

1. C. O. Bishop, "The Snooper," Part I, **CQ**, Aug. 1952, p. 14; Part II, **CQ**, Sept. 1952, p. 14.

Followup on the "Rock Creek Suit"

Readers interested in the outcome of the "Rock Creek Suit" reported in our February editorial may have heard that the "requested temporary injunctions" were denied.

This was the suit contesting the interpretation made by the Executive Committee of the ARRL of the "Article of Association" dealing with elections.

It is interesting to note that Judge Shapiro, in handing down his two decisions, stated in one (re W3PRL and WØGZD) that: ". . . and considering the importance of having a nominee a member of the defendant corporation for a continuous term of at least **four years immediately preceding his petition of nomination . . .**" (Bold-face ours. **Ed**). But then in the decision relating to W3OMN the Judge stated, ". . . the applicable article of association and by-laws of the defendant corporation is that a member of this corporation, in order to be eligible for election as a director of the corporation, must have been a member of said corporation for at least **four years at the date of his election.**" (Bold-face ours, **Ed.**)

Surprisingly enough, this case was taken to court to clearly establish what four-year period the By-Laws were talking about. Since the date of the closing of nominating petitions and the date of the elections is some two months apart the question still begs to be answered.

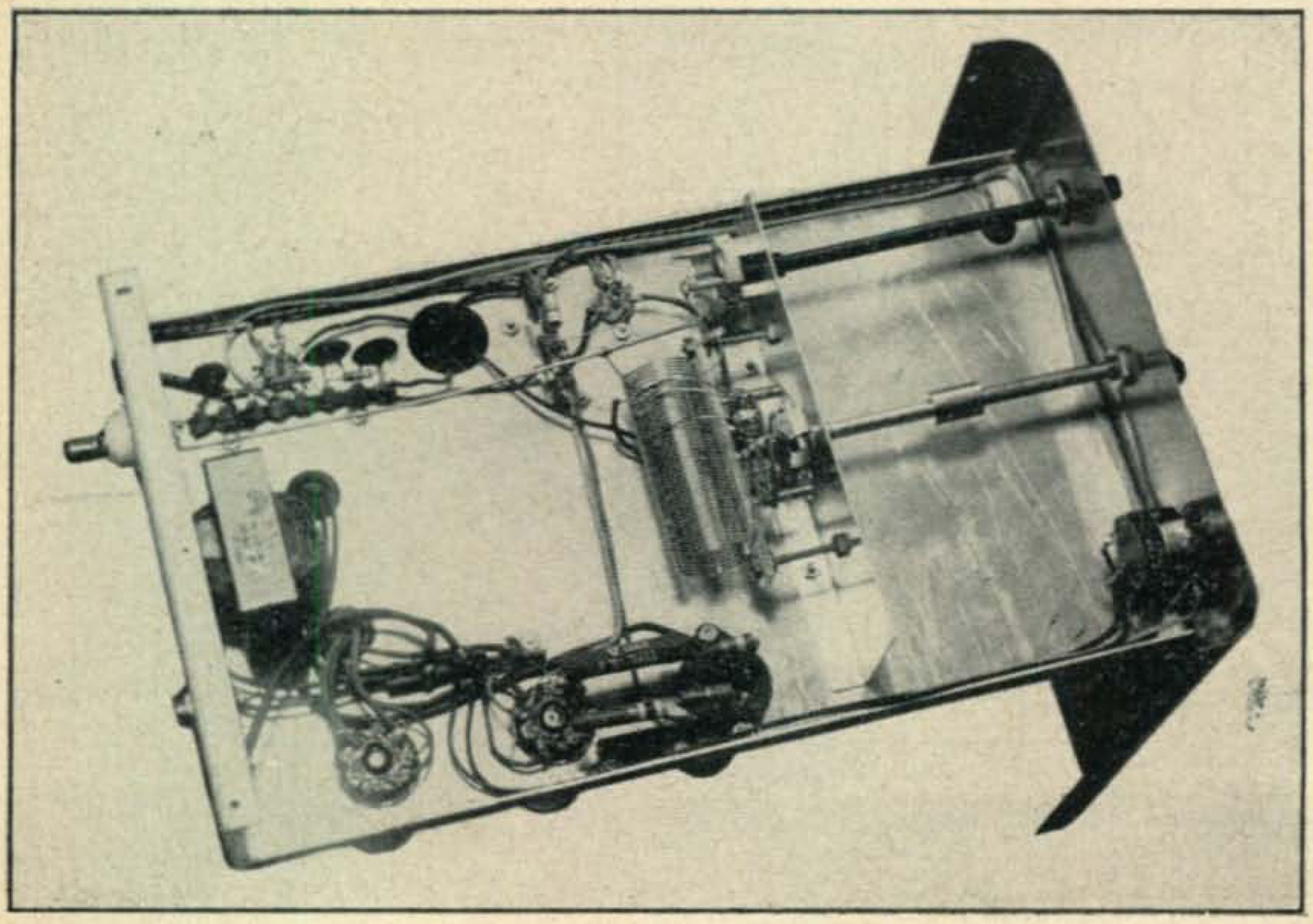

In this under chassis view note the deck wall holding switch S2 and the tapped coil, L2. Condenser C4 is controlled through the extension at the top of this deck wall.

A Complete Amateur Oscilloscope

Frank R. Barkey, VE3DFK
617—8th Avenue East,
OWEN SOUND, Ontario, Canada.

As a general rule, the oscilloscope found in an amateur station will fall into one of two classes. It is either a commercially built unit (or kit) with vertical and horizontal amplifiers and sweep oscillator; or it is simply a cathode ray tube with a high voltage supply (sometimes taken from the transmitter) with simple connections and no amplifiers.

Few amateurs use the oscilloscope to observe received signals because of the difficulty in changing the connections from the transmitter to receiver and back again. The receiver chassis usually has to be taken from the cabinet and the receiver i-f section disturbed to view received signals. As a result, both the commercial oscilloscope and the simple, basic circuit leave a lot to be desired in the way of flexibility, ease of operation, number and type of patterns available and general, all round usefulness in the station.

With the unit described here, any one of five patterns may be selected at the flick of a switch —two from the transmitter and three from the receiver. There is enough gain on a received signal to fill the 5 inch screen. Even an S-3 signal will give a useful pattern. Switching from receiver to transmitter does not affect the receiver alignment. Best of all, it need not cost a lot of money. As a matter of fact by a little judicious horse-trading and the use of salvaged parts from old receivers you too may have a cash outlay of exactly nothing. Old receivers were obtained by the simple process of going around to some of the repair shops and carting away a few relics which were scheduled for the garbage. They will provide power supplies, a number of resistors, condensers, tube sockets, controls, tie points, and you might even use one of the chassis.

The complete circuit diagram is shown in Fig. 1. It is an oscilloscope with the vertical amplifier tuned to the i.f. of the receiver and with a means of switching the deflection plates to select the desired pattern from the transmitter or receiver. A wave envelope pattern or a trapezoid can be selected from the transmitter; a wave envelope, an ellipse or a trapezoid from the receiver. It also has a built in monitor which allows the output of the modulator to be checked by ear while the modulated r-f output is viewed at the same time. In this way hum, distortion, etc., can be quickly isolated if they occur.

Power Supplies

Fig. 2 shows the high voltage negative supply for the cathode-ray tube and the low voltage positive supply for the sweep oscillator and

Complete Amateur Oscilloscope Parts List

R1—50,000 ohm pot.
R2, R12, R29—100,000 ohm, ½ w
R3, R8, R9, R27—500,000 ohm pot.
R4—250,000 ohm, ½ w
R5—50,000 ohm, ½ w
R6, R7—5 meg. ½ w
R10—2 meg. ½ w
R11—3500 ohm, ½ w
R13—5000 ohm pot.
R14—3000 ohm, 2 w
R15—50,000 ohm, 10 w
R16—20,000 ohm, 1 w
R17—2000 ohm, ½ w
R18, R24, R25—1 meg. ½ w
R19—100 ohm, ½ w
R20—10,000 ohm variable
R21—15,000 ohm, 2 w
R22—100,000 ohm pot.
R23—10,000 ohm, ½ w
R26—2 meg. pot.
R28—1000 ohm, 1 w
R30—500 ohm, ½ w

C1—1 mfd. 2000 v
C2, C3—16 mfd. 450 v
C4—8 mfd. 450 v
C5, C6—.02 200 v
C7—.005 mica
C8—.1 mfd. (see text)
C9—.00004 mica
C10, C13—.0001 mica
C11, C12—.01 400 v
C14—.02 400 v
C15—.05 400 v
C16—.1 400 v
C17, C19, C20—.25 400 v
C18—.004 mica or paper
T1, T2—Receiving type power transformers.
T3—I.F. transformer (see text)
S1—3 bank rotary switch
S2—2 bank rotary switch
S3—Single pole, single throw switch
Ch—Small receiver choke.
J1—Open circuit jack.

amplifiers. Two small receiver type power transformers with their secondaries in series provide approximtaely 1250 volts negative in the half wave circuit. No specifications are given for these as any two transformers with the required filament windings will serve and the 5BP1 will perform satisfactorily on voltages from 1000 to 1500. When making the series connection with the secondaries make sure the voltages are in phase. This may be done when the connection has been made by checking the entire secondary a-c voltage. If it is low, reverse the connections to one primary. The values of the resistors in the bleeder network will require

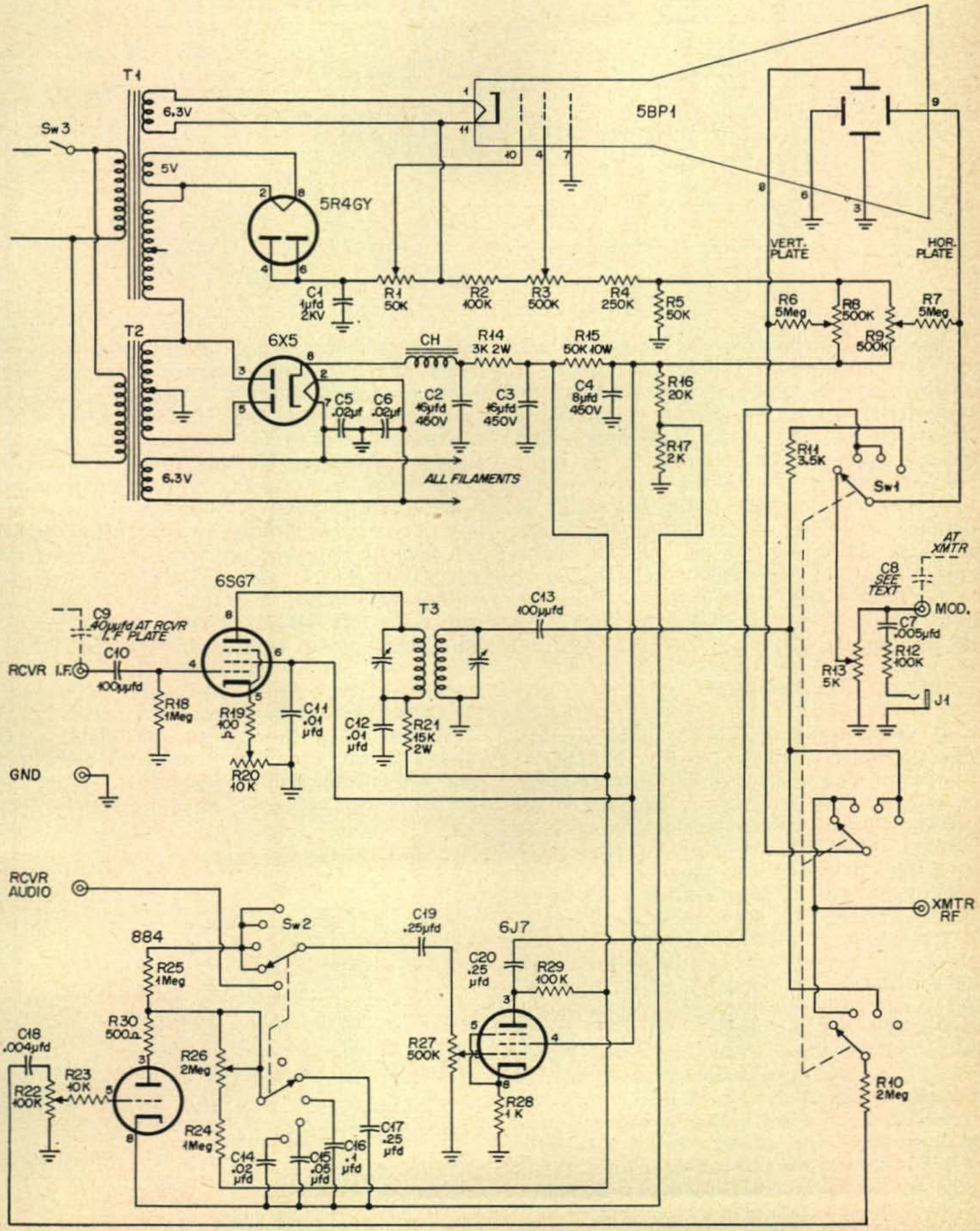

Fig. 1. Complete schematic for the amateur Oscilloscope.

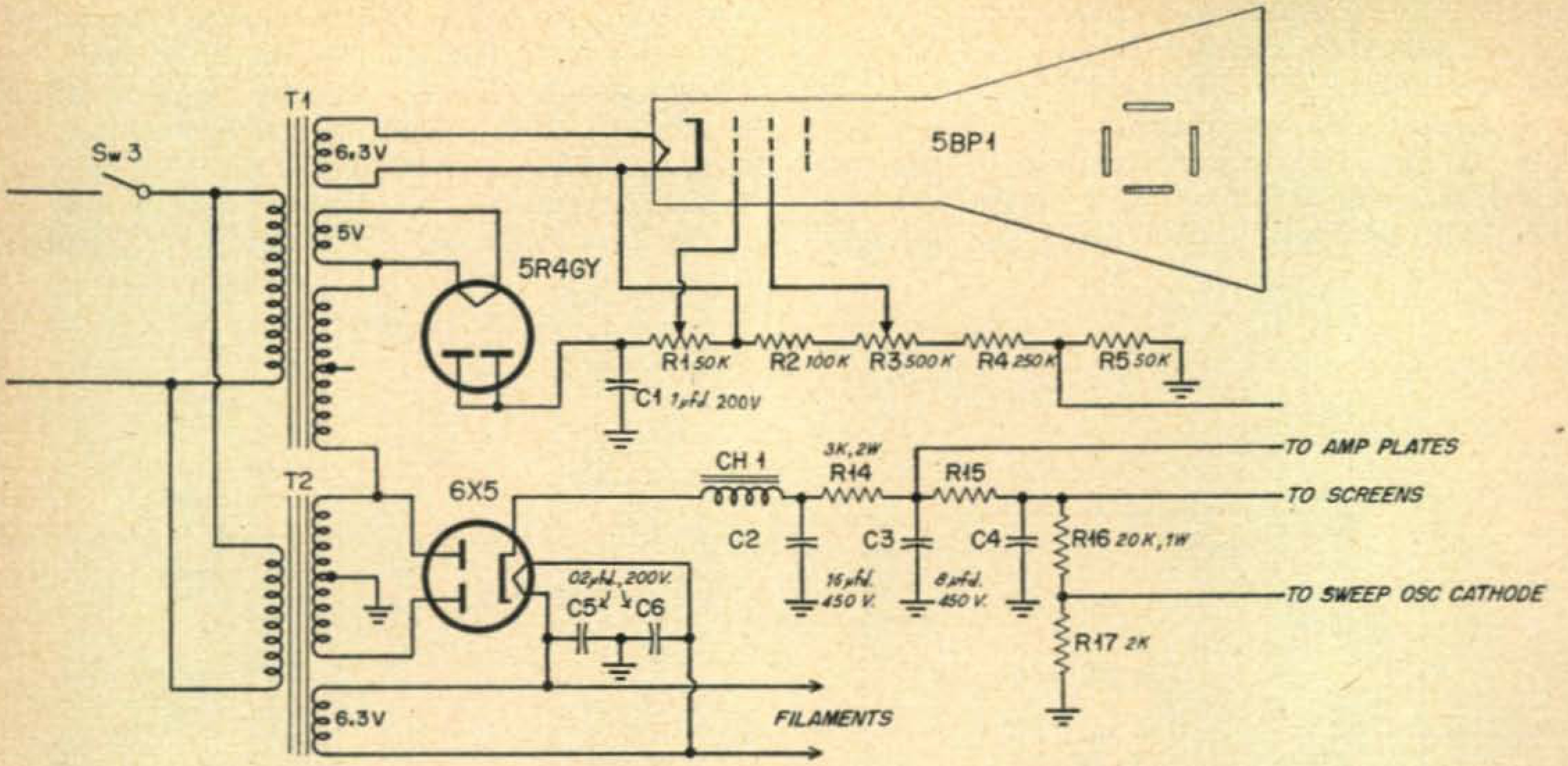

Fig. 2. High voltage negative and low voltage positive supplies.

no change except possibly R5. This may have to be changed from the value shown as will be explained with the centering controls. Since receiving-type power transformers normally do not have electrostatic shields between windings some a-c ripple can be expected on the trace. This will appear only on the wave envelope and is not objectionable for there is plenty of amplification to spread the trace across the screen and all signals can be synchronized to remain steady on the screen. The transformer winding used to supply the low voltage positive supply should be capable of approximately 350 volts output.

Amplifiers

The circuit of the i-f amplifier for the vertical deflection plate is shown in Fig. 3. The i-f transformer used is one that will resonate at the frequency of your receiver i.f. Coupling to the receiver is made through a shielded cable to a .00004 μfd. condenser mounted as close to the receiver tube socket as possible. A number of points throughout the i-f section will provide a signal but the best location is the plate of the last i-f stage. The potentiometer in the cathode of the 6SG7 acts as an amplitude control. If you use a standard setting for this control and use a transparent graph on the scope screen, accurate signal strength readings can be made. Alternatively, the control may be calibrated against a standard amplitude on the scope screen. Variation of this control has some effect on the low voltage positive supply and thus alters the sweep frequency slightly but this is not serious and can be ignored.

The 6J7 amplifier and 884 sweep oscillator are conventional oscilloscope circuits. C14, 15, 16, 17, are selected by one section of S2 to provide various sweep frequency ranges. Fine frequency control within these ranges is provided by R26. Usually, when observing the wave envelope pattern, it is best to adjust the sweep frequency so that it synchronises with the unmodulated carrier and keeps it stationary with no movement to right or left. This will make the pattern of ordinary voice frequencies much easier to observe. Sine wave patterns of any frequency within the range of the oscillator can be locked in and will remain motionless. The 6J7 amplifier is used to amplify the output of the sweep oscillator so that the trace may be spread the full width of scope screen. There is more than enough gain for this purpose. When using a trapezoid pattern from the receiver this stage is used to provide additional amplification for the audio signal from the receiver.

Although the voltage to the plates and screens of the amplifiers and sweep oscillator may vary within limits, the cathode voltage of the 884 sweep oscillator should be kept within

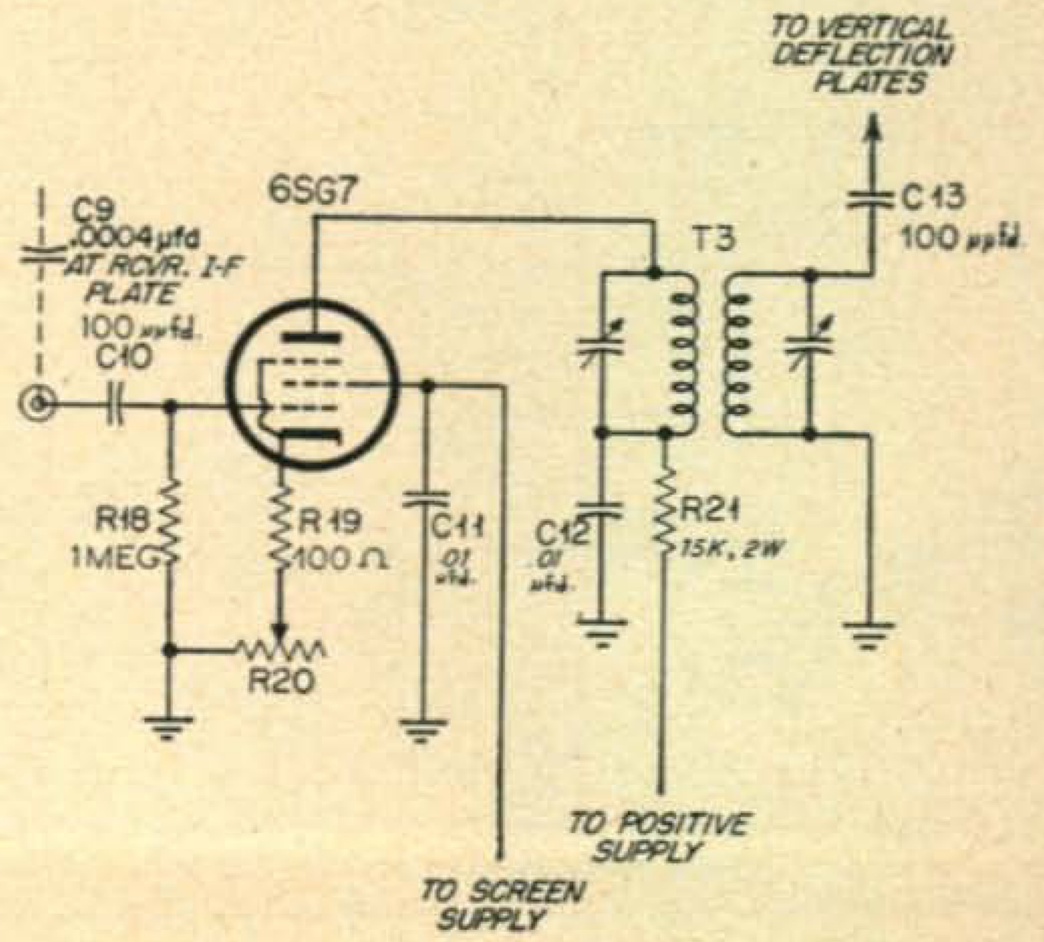

Fig. 3. I-f vertical amplifier.

a range of 5-8 volts positive with respect to ground. This voltage is taken from the positive end of R17. Variation outside these limits will affect the linearity of the sweep oscillator, distorting the audio waveforms.

Centering Controls

The centering controls are two 500,000 ohm variable controls R8, R9, connected as shown in Fig. 4. One end of the combination is approximately 100 volts positive and is tapped off the positive bleeder network. The other end is approximately 100 volts negative tapped off the high voltage negative bleeder. The actual voltage used may vary slightly from this value, but care must be taken to see that both positive and negative voltages are equal, or

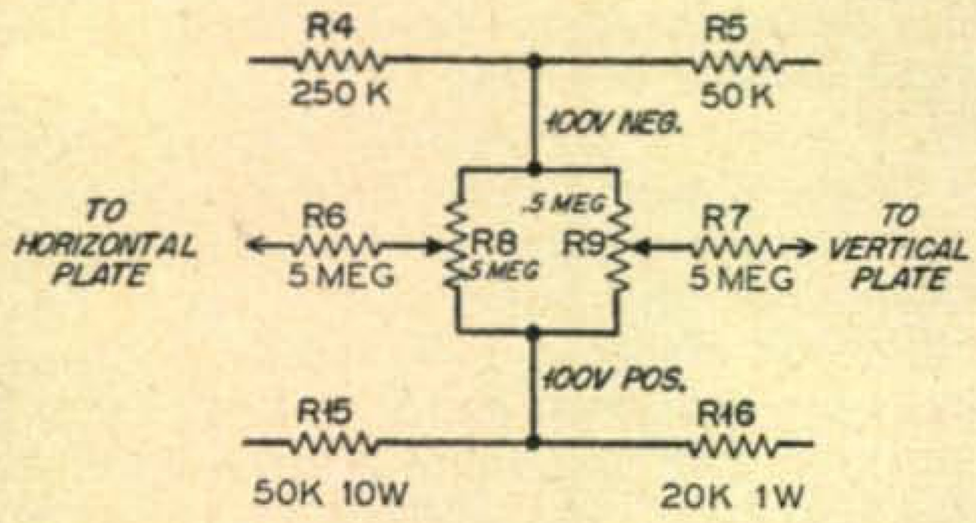

Fig. 4. Centering controls.

within a very small percentage of each other, at these two points. If they are not, the value of R5 should be changed. This will change the value of the negative voltage at the common connection of R8 and R9. R5 should be adjusted until the negative voltage equals the positive voltage at the other end of the resistor combination.

Monitor

The monitor consists of a 100,000 ohm resistor in series with a .25 μfd. condenser to an open circuit jack. Plugging a pair of phones into the jack completes a circuit to ground and a portion of the audio from the output of the modulator appears across them. Removal of the phones opens the circuit. The values are not critical and may be altered to provide the desired volume and quality.

Switching Circuit

A three bank rotary switch is used to switch the deflection plates of the cathode-ray tube to the various connections at the transmitter and receiver to produce the desired pattern on the screen. Switch positions are numbered 1 to 4 and patterns are produced as follows:

Position ♯1. Transmitter Trapezoid

♯1 position connects the horizontal plate to the modulator output through R13 and C8 (which is mounted in the transmitter). This condenser must have a voltage rating considerably higher than the voltage existing at the point of coupling. With plate modulated rigs this should be connected at the top or plate end of the modulation transformer secondary and should have a voltage rating at least twice the final plate voltage. With other forms of modulation the voltage rating should be in proportion to the existing voltage. In clamp tube modulated rigs C8 is connected to the screen of the final tube or to the plate of the clamp tube. The voltage rating should be twice the peak screen voltage. The vertical deflection plate is connected to a pickup loop positioned near the final tank coil. All connections to the scope terminals are permanent and are made through shielded cable. The height or amplitude of the trapezoid is controlled by the position of the loop at the tank coil. The width is controlled by R13. Any phase shift in the pattern will be apparent in the folded sides and may be corrected by changing the value of C8. Reference to a handbook should be made for interpretation of the various forms the trapezoid may take.

Position ♯2. Transmitter Wave Envelope

This position connects the horizontal deflection plate to the output of the sweep frequency amplifier and the vertical plate to the r-f pickup loop in the transmitter final. At the same time, some of the r-f signal is fed to the grid of the sweep oscillator through R10 and C18 to provide sync voltage. With no modulation the carrier appears as a solid band across the screen. Its amplitude will be the same as that of the trapezoid previously set by the pickup loop.

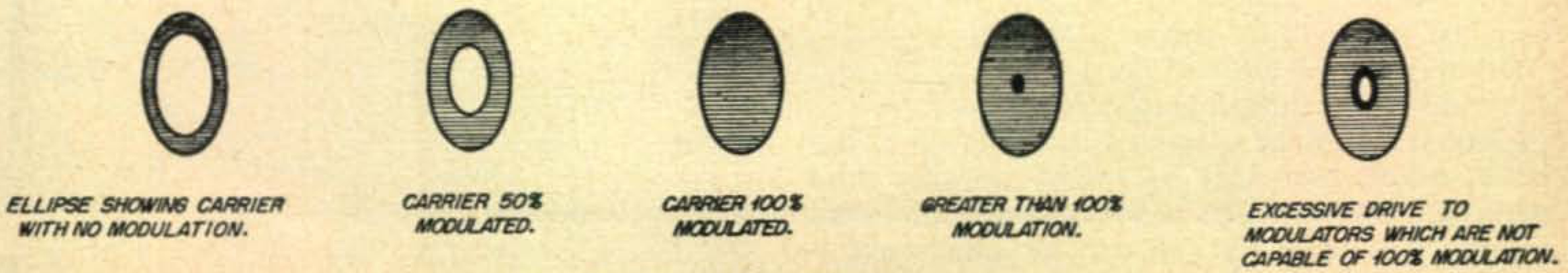

Fig. 5. Elliptical modulation patterns.

Position ♯3. Receiver Wave Envelope

This position connects the horizontal deflection plate to the output of the sweep frequency amplifier and the vertical plate to the output of the i-f amplifier. Part of the signal from the i-f stage is fed to the sweep oscillator grid as sync voltage. In setting this position up after the connections have been made to the receiver, tune in a fairly strong broadcast station and adjust the i-f trimmers in the scope transformer for maximum signal amplitude. Make sure the control in the 6SG7 cathode is turned to maximum gain. At resonance, an S-8 signal should fill the screen. Touch up the receiver i-f section and alignment is complete. Pattern amplitude will be controlled by R20 and the setting of the receiver r-f gain control.

Position ♯3. Receiver Trapezoid

Leaving S1 in Position ♯3, a trapezoid of the received signal is obtained by turning S2 to its ♯5 position. This leaves the vertical plate connected to the i-f amplifier output and the horizontal plate to the sweep oscillator or horizontal output. The input of the horizontal amplifier now is connected to the receiver audio terminal and at the same time the sweep oscillatory circuit is opened. To secure a trapezoid showing no phase shift the connection at the receiver may require some experimentation. It should normally be found at an audio plate or grid but may also be found at the output transformer or speaker voice coil.

Position ♯4. Receiver Ellipse

In this position the vertical plate is connected to the i-f amplifier output. The horizontal deflection plate is fed part of this signal through R11. This signal will shift approximately 90 degrees in phase and an elliptical ring will appear on the screen. Under modulation this ring will appear as in Fig. 5. At 100% modulation the center area fills solidly. As the modulation level exceeds 100% a bright button appears in the center of the figure. This pattern has the ability to disclose quite simply and plainly the operating conditions of a distant transmitter wherein the modulator is overdriven in an attempt to secure more audio or modulating power. In this case the ellipse center area fills to the maximum modulating ability of the transmitter and no more. As the modulator tubes are driven beyond their maximum a bright ring appears in the center of the figure. Under these conditions splatter and distortion become distinct possibilities.

Parts layout is not critical but various positions of the power transformers should be tried to give a minimum of A.C. pickup on the trace. A shield over the cathode-ray tube is recommended and shielded wire should be used to connect the deflection plates to the switch. The author was able to obtain a used oscilloscope chassis and panel and a cover was made from light galvanized iron. However, any metal shop could make up the required chassis and panel at little cost.

HETERODYNE XTAL CALIBRATOR

[*from page 29*]

order harmonics is desired, insulated wires from the oscillator output and the receiver antenna terminal may be loosely coupled by twisting them together for a few turns (without stripping back the insulation to make direct electrical contact).

Layout, tube types and components are not critical. Separate tubes would work as well. A loktal 7N7 was used in the original unit, but a 6SN7 or 12AU7 would perform as well. A pair of 6C4, 6C5, 6J5, 76, 37, 56, or 27's could be used if desired. The common-cathode 6J6 would need relocation of the on-off switch in the B plus leads to obtain separate oscillator function.

A small chassis will suffice, or the circuit can be added in the corner of a small utility power supply, which was done here. Power could easily be supplied by the station receiver.

Other uses include calibration of VFOs and alignment of communication receivers.

Even if a 100 kc standard is available in the shack, many uses will be found for this dual oscillator unit. Since it is inexpensive and easy to build it will be well worth the small investment of time and effort.

LOOK!

The new CQ WORLD GLOBE in the shack of DXer W2QHH



Electronic TUBES

G-E HAM NEWS

Copyright 1956, by General Electric Company

GENERAL ELECTRIC

SEPTEMBER–OCTOBER, 1956 VOL. 11—NO. 5

THE HAMSCOPE

monitors your AM or SSB transmitter



The problem of visually monitoring your audio is solved by building a HAMSCOPE, as shown, between your amplifier grid and plate meters—or, if you prefer, in a separate unit constructed to suit your needs.

—Lighthouse Larry

CONTENTS

The HAMSCOPE . . . . . page 2
Announcing the 1956 Edison Award . . . . . page 6
Sweeping the Spectrum . . . . . page 7
Using the HAMSCOPE . . . . . page 8

THE HAMSCOPE

DESIGN CONSIDERATIONS

The "HAMSCOPE" is a simplified cathode-ray oscilloscope—designed specifically for checking the operation of amplitude-modulated and single-sideband transmitters operating in the 1.8–30-megacycle frequency range. The screen patterns will tell a more complete story about linearity, distortion, percentage of modulation, than meters or similar indicators. Since a linear sweep, vertical and horizontal deflection amplifiers and other complications are not needed for examining transmitter output, this 'scope is reduced to essentials—the cathode-ray tube; a tuned circuit for applying RF voltage to the vertical deflection plates; a 60-cycle or audio frequency sweep on the horizontal plates; and a high-voltage power supply.

Choice of the cathode-ray tube determines other factors, such as over-all size and voltages, and will be considered first. Even though a late type, the 3KP1, was used in this circuit, older cathode-ray tubes—the 3AP1, 3BP1, 3CP1, 3GP1, 3MP1, or the 2AP1, 2BP1, etc.—should be suitable. Many amateurs already have these tubes stored away, with the intention of putting them to work in a unit of this type.

A cathode-ray tube is similar to other thermionic vacuum tubes in that electrons emitted from the hot cathode are attracted toward a more positively charged anode. The main difference in C-R tubes is that the cathode and several disk or cylindrical-shaped elements, called the electron gun, concentrate the electron stream into a thread-like beam. These elements each have a small axially aligned hole through which the beam passes. The control grid, adjacent to and negatively charged with respect to the cathode, controls the intensity of this beam. The next element is the focusing anode, operating at 30 to 50 percent of the total supply voltage. The accelerating anode, next in line and having a high positive charge, pulls the electron beam through the gun and hurls it toward a phosphor-coated screen on the faceplate. A small spot appears on this screen when voltages applied to the elements have the proper relationship. Last element in the gun, four deflection plates arranged in pairs about the electron beam axis, bend this beam in accordance with a difference in potential between the pairs. Because each point on the fluorescent screen continues to glow briefly after being energized by the beam, the spot traces a composite pattern of any varying deflection voltages applied to the plates.

The electron beam also will be deflected by stray magnetic fields. Presence of a permanent magnet or inductance energized by direct current near the tube neck will cause the spot to move from its normal position. An alternating-current field, such as that which surrounds power transformers, will cause the spot to sweep back and forth at right angles to the plane of the field. For this reason, selecting a location for the power transformer which causes no stray beam deflection is usually the most critical mechanical problem encountered in constructing cathode-ray oscilloscopes. Since the transformer may induce a field into a steel chassis if it is fastened directly to that chassis, an adjustable transformer mounting bracket helps overcome this difficulty.

CIRCUIT DETAILS

Since current flow through a cathode-ray tube is quite small, voltages for the elements may be tapped from a high resistance voltage divider connected across a power supply which need deliver only a few milliamperes of current. Resistance values in this voltage divider, shown in the schematic diagram, Fig. 1, have been selected to offer a wide adjustment range on the "INTENSITY" and "FOCUS" controls, and to place some load on the power supply. Different values should not be necessary even with other cathode-ray tube types and higher supply voltages. Centering controls for positioning the pattern were considered an unnecessary refinement, since most cathode-ray tubes are constructed to place the undeflected spot within ¼ inch of the center of the screen.

If the cathode or control grid is operated near chassis potential (the "normal" method of connecting B-minus), the accelerating anode and deflection plates must have a high positive potential applied to them. This creates a dangerous shock hazard in circuits where the deflecting signal to be observed is connected directly to these plates. The danger is easily reduced by operating the latter elements near chassis potential and applying a negative high voltage to the control grid-cathode end of the voltage divider network. This system also avoids the necessity of using high-voltage coupling capacitors to isolate the deflection plates, the alternate method of reducing the shock hazard. Most 2- and 3-inch cathode-ray tubes will have sufficient pattern brightness for this application if at least 800 volts appear across the voltage divider, although operation at 1000 to 2000 volts insures some reserve brightness. One side of the cathode-ray tube heater is connected to the negative high voltage to insure that the heater-cathode potential difference will not rise above the rated value.

A built-in negative high-voltage supply is pictured in the schematic diagram, rather than depending upon the transmitter being monitored to furnish positive high voltage. Thus, the 'scope will check even *flea-powered* transmitters. Even though special oscilloscope power transformers are available (Merit P-3170 and Triad A-43-C), a conventional replacement-type power transformer delivering at least 600 volts across the *entire* secondary winding was used for T_1. Because of the low current drain, a simple half-wave rectifier and capacitor input filter, which charges up to the peak AC transformer voltage, is suitable. Capacitors C_1 and C_2 should have a working voltage rating at least 1½ times the transformer secondary voltage.

As only a 5-volt rectifier heater winding with no center tap was available on this transformer, the 2.5 volts required by a 2X2A rectifier tube is supplied by inserting dropping resistor R_1 in series with the heater. One section of a 5R4-GY full-wave rectifier tube may be used in place of the 2X2A, R_1 not being required for this tube. The maximum AC voltage-per-plate ratings of most other full-wave rectifier tubes will be exceeded in this circuit, and should not be used.

Both power and horizontal sweep selection are controlled by S_1, wired so that the 'scope is "OFF" in one position. The second position applies line voltage to the power transformer and 25,000-ohm sweep control potentiometer, and the third position also connects the power and applies an external audio voltage, fed through J_1 into this control. The primary of a single plate to push-pull grid interstage audio transformer is connected between the arm and one side of the potentiometer and both ends of the secondary winding connect to the horizontal deflection plates. A transformer with a large step-up ratio, 1:4 or higher, will sweep the full width of most cathode-ray tubes with 20–30 volts RMS applied to the primary. A linear horizontal sweep generator would needlessly complicate the circuit, since the center portion of a sine wave sweep is sufficiently linear.

The vertical deflection plates are connected across tuned circuit C_3—L_1, resonant at the frequency of the RF signal being checked. A small RF voltage fed through a coaxial cable plugged into J_3 is link-coupled to the tuned circuit through L_2. Any combination of variable capacity and inductance which will tune to the desired frequency may be used in place of the parts specified for C_3, L_1 and L_2. The large maximum capacity specified for C_3 enables the tuned circuit to cover all popular bands with only 2 coils, but a bandswitching coil system may be incorporated for added convenience.

MECHANICAL DETAILS

Most relay rack panels with holes cut for three 3-inch meters have about 6½ inches of space between the two outer meter holes, limiting one "HAMSCOPE" dimension to less than this figure. Over-all depth of the unit is regulated by the depth of the relay rack cabinet into which the 'scope will be mounted. Most cabinets are more than 14 inches deep, but the 6- by 14- by 3-inch chassis used on this model is the largest that may be safely accommodated. A chassis drilling diagram is not shown, since available transformers, capacitors, tubes, etc, may vary in size somewhat from the components pictured in Fig. 2. Instead, approximate dimensions for locating major parts have been marked on the side view illustration, Fig. 3. Actual parts to be used should be placed in and about the chassis to find locations which will not conflict with the cathode-ray tube, control shafts, brackets, etc.

Holes for the "SWEEP" potentiometer and S_1 are drilled as close as possible to the upper chassis corners, and corresponding holes for panel-bearing assemblies are drilled at the lower corners. On this model, the hole centers were three quarters of an inch each way from the outside chassis wall. The four control knobs will then form a rectangle about the tube face.

The faceplate end of the tube is not held in a clamp, but rests between two strips of rubber cemented to the underside of the chassis deck and bottom lip. A square hole in the panel end of the chassis for the tube is preferable to a round hole, since the bottom lip must

COIL TABLE

1.8—7.5 MEGACYCLES

L_1—32-uh, 34 turns No. 24 enameled wire, center tapped, wound in two 17-turn coils spaced ¼ inch, 1½ inches long on a 1½-inch-diameter 5-prong molded phenolic plug-in coil form.

L_2—3 turns No. 20 insulated hook-up wire at center of L_1.

9—30 MEGACYCLES

L_1—1.3-uh, 6 turns No. 24 enameled wire, center tapped, wound in two 3-turn coils spaced ¼ inch, ¾ inches long on same type form.

L_2—2 turns No. 20 insulated hook-up wire at center of L_1.

Commercially available coils which may be substituted for the above coils include the Bud CCL or OLS; or the B & W MCL, JCL and JVL series.

PARTS LIST

C_1, C_2—0.1 to 0.5-mfd paper, working voltage 1.5 times secondary voltage of T_1.

C_3—Two-section variable, 10–400-mmf per section.

F_1—Chassis-type fuse holder with 1-ampere fuse.

J_1—Open circuit midget 'phone jack.

J_2—Chassis-type male 2-prong power connector.

J_3—5-prong ceramic tube socket.

J_3—Chassis-type coaxial cable connector.

J_4—5-prong ceramic tube socket.

R_1—5-ohm, 10-watt adjustable resistor.

S_1—4-pole, 3-position, single section non-shorting tap switch (Mallory 3243J).

T_1—Replacement type power transformer with a 600–750-volt, 40-ma high voltage winding; 5-volt, 2-ampere and 6.3-volt, 0.6-ampere heater windings; 115-volt, 60-cycle primary.

T_2—Single plate to push-pull grid interstage transformer having a step-up ratio of 1:3 or higher (Stancor A-53-C, A-64-C).

V_1—2X2A or 5R4-GY rectifier tube (see "CIRCUIT DETAILS").

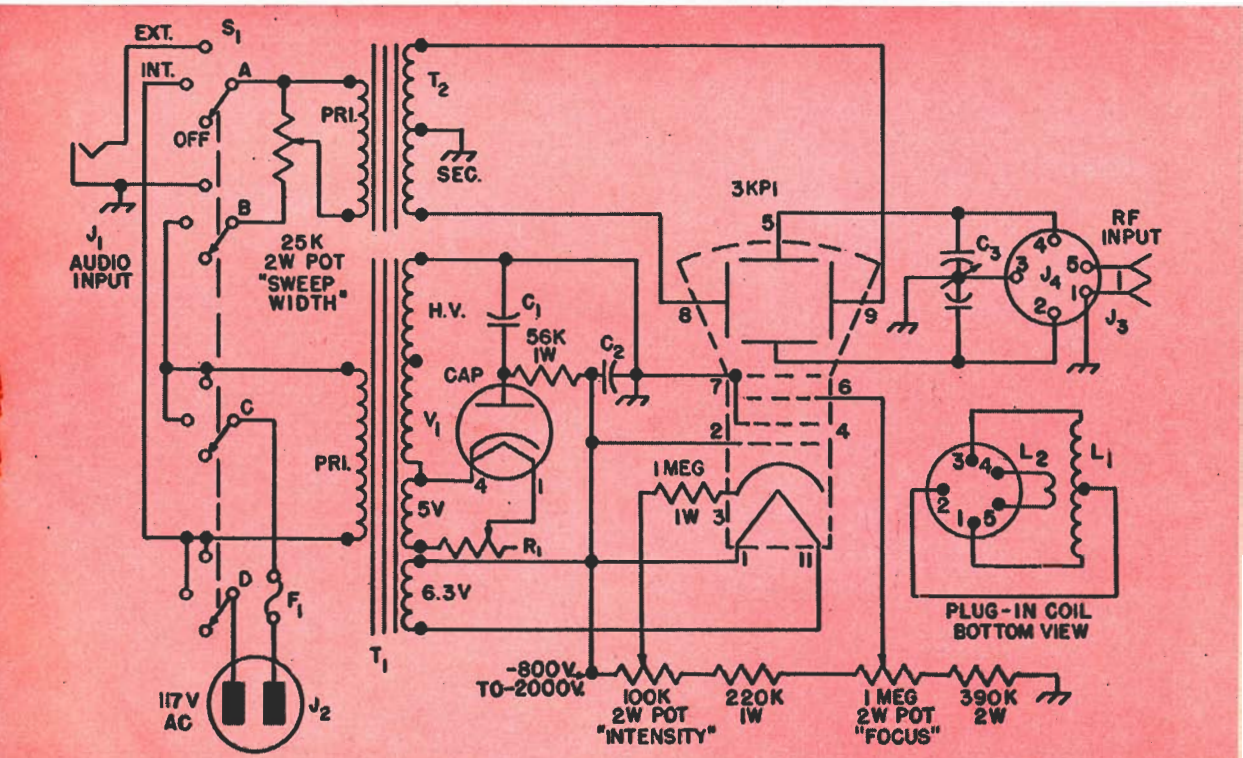

Fig. 1. Complete schematic diagram of the "HAMSCOPE."

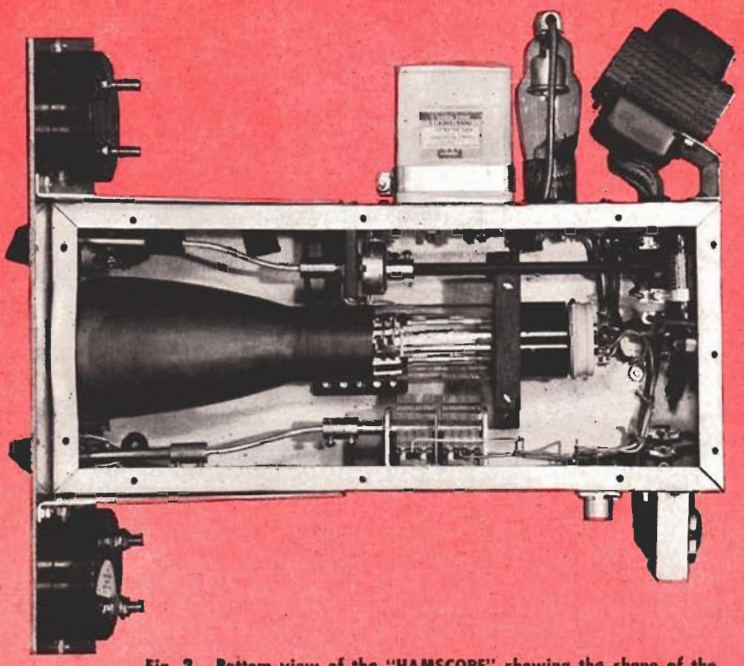

Fig. 2. Bottom view of the "HAMSCOPE" showing the shape of the power transformer mounting bracket and position of components inside the chassis. The plug-in coil has been removed.



Fig. 3. Side view showing approximat capacitors. Dimensions of the side brac

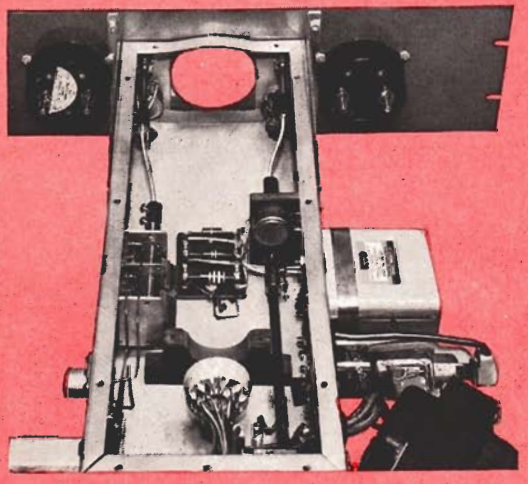

Fig. 4. View from rear of chassis with C-R tube removed to show 3-inch-square cutout in chassis front wall and bulge in bottom lip.

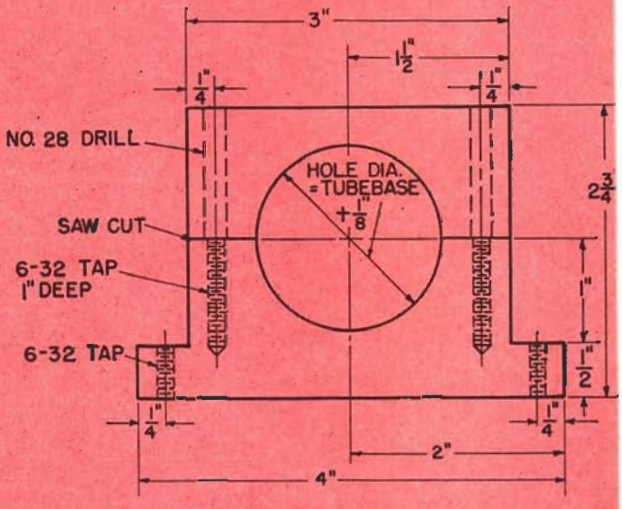

Fig. 5. Mounting bracket for C-R tube base made from ½-inch-thick phenolic insulating board or similar material.

be bent down to clear the large end of the tube as shown in Fig. 4. With the tube in place, the chassis is positioned behind the panel so that the tube is centered in the meter hole. The chassis top deck measured about 1 inch down from the top edge of the rack panel in the correct position. The $\frac{3}{8}$-inch diameter chassis holes for the control shafts are now marked on the back side of the panel with a scriber or pencil and matching holes are drilled through the panel in these locations. Large holes for the fuse holder and J_1, and small holes for the chassis support brackets are also drilled. These brackets, shown in the side view, were made of $\frac{1}{16}$-inch-thick sheet aluminum and rigidly brace the chassis.

A clamp for the cathode-ray tube base end, pictured in Fig. 5, was fashioned from $\frac{1}{2}$-inch thick phenolic insulating board. A hole $\frac{1}{8}$-inch larger in diameter than the tube neck is bored, all small holes drilled, then the board is cut in half at the line indicated on the drawing. Finally, all holes are tapped, except the holes for the clamping screws on the top portion which are redrilled to clear the 6-32 by $1\frac{1}{2}$-inch-long machine screws which hold the clamp together. Then, cement two strips of $\frac{1}{16}$-inch-thick sheet rubber into the large hole to act as a cushion for the tube. A sheet aluminum bracket for fastening the power transformer may be fashioned after the proper transformer location has been

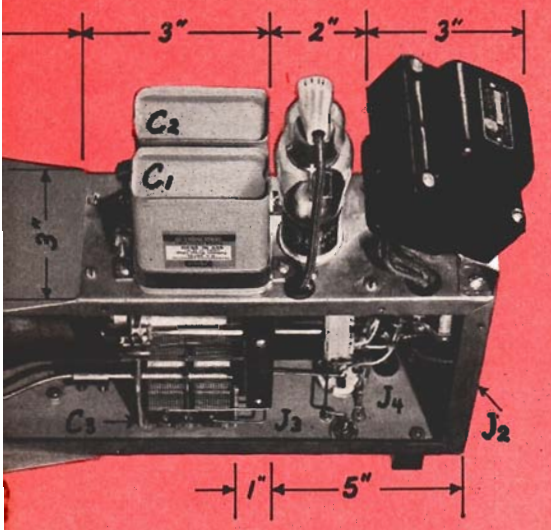

spacing of the power transformer, rectifier tube and filter
ts are exact, but may be varied to suit the available space.

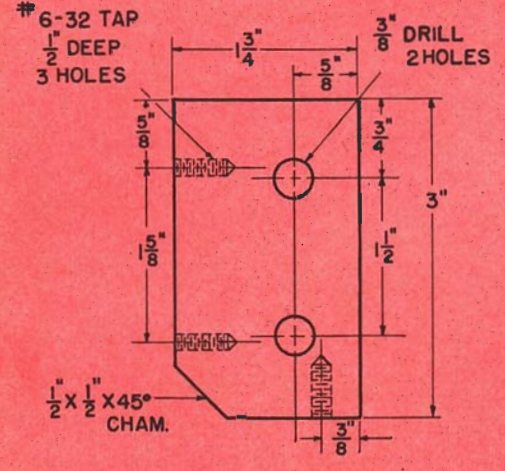

Fig. 6. Bracket made from ¼-inch-thick insulating board to hold the "FOCUS" and "INTENSITY" potentiometers next to the C-R tube neck. Mounting holes may be first drilled in the chassis, then marked on both brackets.

determined by following the suggestions outlined under "OPERATION." Universal mounting transformers will require a bracket similar to that illustrated in Fig. 2. Upright mounting transformers normally have the bolting flange at the bottom, dictating a shorter type of bracket. Tubular-type filter capacitors with leads may be substituted for C_1 and C_2 by supporting them on a terminal board which is placed in an unoccupied portion of the chassis. A steatite 4-prong socket for the 2X2A, or octal socket for a 5R4-GY, is preferable to phenolic types because of the fairly high voltage.

The deflection circuit components mount on the opposite side of the chassis. Sweep transformer T_2 was located at the rear corner, also to minimize the effect of its stray fields on the 'scope tube. The plug-in coil socket, J_4, and the coaxial cable connector, J_3, may be mounted side by side if L_1 and L_2 are to be wound on molded plug-in coil forms. However, if the larger manufactured air-wound coils specified in the "COIL TABLE" are preferred, additional coil space may be obtained by moving J_4 toward C_3 and centering it vertically on the side wall. The variable capacitor should be a fairly compact unit; otherwise the rotor plates may strike the cathode-ray tube neck when the capacitor plates are about half meshed. If necessary, the tube may be positioned slightly off center in the chassis to obtain this clearance. The capacitor shaft is driven through a panel-bearing and shaft assembly coupled to a 3-inch flexible shaft.

A strip of ¼-inch-thick insulating board, shaped and drilled to dimensions shown in Fig. 6, is a convenient mounting for the "INTENSITY" and "FOCUS" potentiometers, both of which are insulated from the chassis. Insulated couplings, a 3-inch flexible shaft, and a shortened 3-inch shaft and panel-bearing assembly permit operation of the "INTENSITY" control from the front panel. A length of fiber shafting extends the "FOCUS" control to the rear of the chassis, since it seldom requires adjustment. The voltage divider fixed resistances are fastened to a small terminal board suspended on machine screws, with extra nuts as spacers, just above the cathode-ray tube neck where they may be conveniently wired to the potentiometers.

WIRING DETAILS

Leads from the power connector, J_2, on the rear of the chassis to S_1 are shielded wire, but all connections except the high-voltage leads are made with conventional hook-up wire. High-voltage wire was used on the rectifier anode, filter capacitor and voltage divider connections. Plastic insulating tubing was slipped over the transformer high-voltage and heater leads for added protection. Connections between the coil socket, variable capacitor and coaxial connector are made with tinned No. 14 copper wire. Leads to S_1 and the "SWEEP" control should be assembled before they are mounted in the rather restricted chassis corners. The cathode-ray tube socket leads should be connected so that pin 1 is *down* for a 3KP1 and have some excess length. For other tube types the pin number denoting the deflection plate axis is placed down.

The power transformer should be temporarily wired into the circuit with all leads left full length and running through rubber-grommeted holes in the power supply side wall. The transformer is permanently mounted following preliminary tests, leads are cut to proper lengths and any unused leads are clipped short and taped. Wiring to the fuse holder and J_1, above the chassis, runs up through rubber grommets placed in ⅜-inch diameter holes. Meters inserted in the outside panel holes are wired into the transmitter circuits by direct connection to the meter terminals. The power leads to J_2 may be connected to existing transmitter filament wiring.

OPERATION

After a final wiring check, set the slider on resistor R_1 to 1.5 ohms with an ohmmeter. Lay the power transformer, which is hanging by its leads, about 1 inch from the chassis in the position shown in Fig. 4. Insert the 2X2A rectifier tube, but do not connect its anode cap or plug in the cathode-ray tube at this time. Connect an AC voltmeter to pins 1 and 4 on the rectifier socket, turn S_1 to the "EXT." position and read the heater voltage. If 2.5 volts is not read, *turn off* the power and adjust the slider on R_1 until this voltage appears across the 2X2A socket with power on.

With the power off, connect the anode cap on the 2X2A, insert the cathode-ray tube and clamp it in place. Again turn S_1 to the "EXT." position and turn



nominations invited for FIFTH ANNUAL EDISON AWARD

The 1956 Edison Radio Amateur Award again will honor an amateur who has rendered important public service. As before, the Award also will serve to acknowledge the generous help which all radio amateurs offer their communities and the nation when need arises.

For 1956, a new Award winner will be added to the call letter honor roll of the four previous winners (1952—W5PHP; 1953—W9NZZ; 1954—W6VFT; 1955—W2JIO). He will receive the handsome Edison Award trophy, a $500 check, and nationwide recognition.

A committee of distinguished and impartial judges will select the winner from candidates who are nominated by letters from you and others. Since only names submitted in this way will be considered by the judges, your participation is vital. Start now to choose your candidate for the 1956 Edison Award!

RULES OF THE AWARD

WHO IS ELIGIBLE. Any man or woman holding a radio amateur's license issued by the F.C.C., Washington, D. C., who in 1956 performed a meritorious public service in behalf of an individual or group. The service must have been performed while the candidate was pursuing his hobby as an amateur within the continental limits of the United States.

WINNER OF THE AWARD will receive the Edison trophy in a public ceremony in Washington, D. C. Expenses of his trip to that city will be paid.

$500 GIFT. Winner will be presented with a check for this amount in recognition of the public service he has rendered.

WHO CAN NOMINATE. Any individual, club, or association familiar with the service performed.

HOW TO NOMINATE. Include in a letter these five facts: (1) Name of nominee. (2) Mailing address of nominee. (3) Actual place of residence of nominee (if different from mailing address). (4) Amateur radio call letters assigned to the nominee by the Federal Communications Commission. (5) A *full description* of the public service performed by the nominee.

In addition, it is desirable—but not absolutely necessary—to supply additional general information such as the following: (6) Age of nominee. (7) Occupation or profession. (8) Name and address of employer (if employed). (9) Telephone number (or telephone at which nominee can be reached). (10) Any other information about the nominee which may be available and which may assist the judges in evaluating the public service performed. (11) Newspaper clippings, letters of commendation, photographs, and other supporting documents are welcomed. Papers having personal value will be returned after the judging, upon request.

BASIS FOR JUDGING. All entries will be reviewed by a group of distinguished and impartial judges. Their decisions will be based on (1) the greatest benefit to an individual or group, (2) the amount of ingenuity and sacrifice displayed in performing the service.

Winner of the award will be announced on or before Thomas A. Edison's birthday, February 11, 1957. Employees of the General Electric Company may nominate candidates for the Edison Radio Amateur Award, but are not permitted to receive the Award.

Generally, amateur radio public services fall under the following four headings: 1. Emergency Communications. 2. Organizational Efforts. 3. Unique Individual Service. 4. Message Handling. They all share equally important consideration by the judges.

JUDGES WILL BE

E. ROLAND HARRIMAN,
Chairman, The National American Red Cross.

HERBERT HOOVER, JR., W6ZH/K6EV,
The Under Secretary, U.S. Department of State

ROSEL H. HYDE,
Commissioner, Federal Communications Commission.

GOODWIN L. DOSLAND, WØTSN
President, American Radio Relay League.

the "INTENSITY" control clockwise until a pattern appears on the tube screen. Next, adjust the "FOCUS" control until the pattern resolves into a sharp spot or line. If a line is observed, turn S_1 to the "OFF" position and note whether the line changes to a small spot before it fades from view. If it does, the stray field from the power transformer is deflecting the spot. With S_1 again in the "EXT." position, turn the transformer in various positions until the line reaches minimum length. Leave the transformer in this position and take measurements for the mounting bracket, described under "MECHANICAL DETAILS." Tests with three types of transformers indicate that it should be spaced at least 1 inch from the chassis.

The internal 60-cycle horizontal sweep now can be tested by setting S_1 on the "INT." position and turning the "SWEEP" control clockwise until a full-width line appears on the screen. With the sweep transformer specified in the "PARTS LIST," it should be possible to extend the sweep far beyond the tube face.

An external RF voltage is applied to the "HAMSCOPE" by running a small coaxial cable from J_3 to the device being checked. This cable should terminate in a small coil placed near the output tuned circuit in that device. The loop also may be coupled to the antenna tuning network or ***balun*** coils used with some transmitters. For convenience in making connections, an extra coaxial cable connector may be added to the unit in which the coupling loop is placed.

After tuning C_3—L_1 to the output frequency, the RF voltage on the vertical deflection plates appears as a band across the C-R tube face. Maximum height of this pattern can be set by adjusting the coupling loop; then the C_3—L_1 tank can be detuned to reduce the vertical deflection if desired. A wide pattern is developed on a 3KP1 even from the low output of a grid-dip oscillator coupled to the tuned circuit, indicating good deflection sensitivity. The width of this pattern will vary in accordance with the modulation applied to the transmitter. A detailed description of the patterns obtained from amplitude- or frequency-modulated, and single-sideband-suppressed-carrier transmitters will be found in amateur radio handbooks and magazine articles covering these forms of modulation.

Final dressing up includes: adding control knobs which match those in your station; marking these controls with ***decal*** labels; cementing a bezel made from ¼-inch-diameter plastic tubing around the C-R tube opening; and fitting a perforated sheet aluminum chassis bottom plate to the underside of the "HAMSCOPE."

USING THE HAMSCOPE

Two types of patterns, wave envelope and trapezoidal, normally are used for checking AM or SSB transmitter modulation with an oscilloscope. The "HAMSCOPE" will present a wave envelope pattern simply by feeding the transmitter RF output into the vertical deflection circuit through J_3 and turning S_1 to the "INT." position. Modulation of the transmitter either by voice or an audio tone will cause the RF carrier band on the screen to vary in height. The pattern may move across the screen or remain stationary if the modulating frequency is an exact multiple of the 60-cycle horizontal sweep frequency.

When a trapezoidal-type test pattern is desired, an amplitude-modulated transmitter output is applied to J_3, but S_1 is turned to the "EXT." position. An audio voltage which is in phase with the audio being applied to the modulated amplifier stage is fed into J_1. With the transmitter unmodulated, no horizontal sweep appears, but the RF output is indicated by a vertical line. Applying 100-percent modulation should result in the usual trapezoidal pattern. Any phase difference between the sweep and modulator audio will cause oval-shaped traces to appear along the upper and lower edges of the trapezoid. This condition may be corrected by installing a 500-mmf capacitor and a 0.5-megohm potentiometer in series with the ungrounded audio lead to the "HAMSCOPE."

The modulation transformer secondary in plate, screen or control-grid type modulators, and the plate of a clamp-tube modulator, are suitable points to connect one end of a voltage divider from which the audio sweep voltage for the "HAMSCOPE" is obtained. This divider should include a: (1) coupling capacitor, (2) fixed resistance and (3) potentiometer, series-connected in that order between the tap-on point and the chassis. Suitable values for these components are: (1) capacitor, 0.005-mfd per megohm of total divider resistance; (2) fixed resistance, 1 megohm per 1000 volts DC potential at the tap-on point; (3) potentiometer, 0.1 megohm. The capacitor should have a working voltage rating equal to 2.5 times the DC voltage, and the fixed resistance should have one resistor for each 500 volts at this point. Audio is fed from the potentiometer arm to J_1 through a shielded cable.

Audio sweep voltage for checking single-sideband transmitters with a trapezoidal pattern on the "HAMSCOPE" may be taken from the output of the separate audio amplifier stage for the voice-controlled break-in circuit with which most SSB exciters are equipped.

RANDOM IDEAS

A smaller chassis, 5 by 10 by 3 inches, may be chosen for a "HAMSCOPE" built around a 2-inch or one of the short 3-inch cathode-ray tubes (3MP1, 3UP1). In this narrower chassis, the tube still should be placed 3 inches from the power supply wall of the chassis. The variable capacitor should be mounted outside the chassis, preferably in a small box, which also could house the plug-in coil socket. The shorter chassis also permits locating the power transformer directly behind the cathode-ray tube base where it is less likely to cause stray deflection effects. Another variation is to select a chassis large enough to also enclose the meters on the panel, which gives the constructor space to add future accessories to the basic 'scope circuit.

If your meter panel has three holes for 2-inch meters, a "HAMSCOPE" using a 2-inch cathode-ray tube may be constructed in a chassis up to 7 inches wide. The "HAMSCOPE" also may be adapted for table mounting by selecting a utility cabinet proportioned to house all components. Again, the principal design problem is locating the power transformer where its stray field does not affect the cathode-ray tube operation.

Electronic TUBES

G-E HAM NEWS

Available FREE from G-E Electronic Tube Distributors

published bi-monthly by
ELECTRONIC COMPONENTS DIVISION
GENERAL ELECTRIC
Schenectady 5, N. Y.
In Canada
CANADIAN GENERAL ELECTRIC CO., LTD.
189 Dufferin St., Toronto 3, Ontario

E. A. NEAL, W2JZK—EDITOR

Printed in U.S.A.

VOL. 11—NO. 5

SEPTEMBER–OCTOBER, 1956

DES ROBERTS
24-60 MT. VERNON STREET
LYNN, MASSACHUSETTS

Form 3547 Requested

Power Supplies

The power supply is one of the most neglected parts of any transmitter, and the last thing anyone thinks about as long as the HV comes on and the fuses don't blow. This invisible and weighty servant is really as important as the modulator power stage, for any noise or disturbance coming from the power supply will "modulate the modulator".

Although power supplies are usually very simple and frequently are not regulated, there are advantages in using regulated supplies and not as many people are familiar with them, so they have been given more emphasis in this section than standard unregulated power supplies. Those are treated in depth in various handbooks and textbooks. Electronically regulated supplies for spech amplifiers, bias, and screen voltages add stability to any piece of equipment.

In lieu of a regulated supply, a well thought out power design is usually satisfactory if line voltage is stable. Ideally, the DC voltage should not vary by more than 10% in sensitive stages, or at most by 20% in speech amplifier output stages and modulator drivers.This goal is made more difficult by the variable current draw characteristics of class B and class AB stages sometimes used in the larger of these positions.

Included in this volume is an example of a 50 Watt amplifier using a pair of 6550's operating at a stabilized 450VDC, supplied through a pair of 6080 regulators from a 475VAC transformer followed by a capacitor input filter. This section on power supplies contains several electronic regulators.

Electronic regulators are a mature technology. All the experimenter need be concerned with is having enough extra B+ voltage to overcome the regulator's minimum voltage drop at full load and the additional heat to be removed. An electronic regulator need not dissipate more than 20% of the total power to the load.

For the modulator power stage, an electronically regulated supply is usually out of the question due to size, cost, and wasted power. Therefore, it is wise to build the best unregulated power supply possible.

In considering whether or not to electronically regulate the various supplies from small to great, keep in mind that the Old Masters used very few regulated supplies. Besides careful design of power supplies themselves, including several sections of RC filtering to drop the B+ to the low voltages required for sensitive input stages, additional emphasis was placed upon audio circuits that would maintain good balance and performance over the fluctuating mains voltages of the times. Therefore, it is worthwhile to discuss the sources of poor regulation caused by basic power supply components.

Some of the worst regulation problems are traceable to the power transformer's impedance, which is related to its windings' DC resistances and the turns ratio of the unit. It is easy to see why a 100 Ohm secondary would have better regulation than a 200 Ohm winding of the same voltage. The same goes for the low-resistance 120/240V primary. It is wise to build or invest in a milliohm meter to check these windings. Most meters show only to 1 Ohm resolution, and the resistance of the leads and how they are pressed to the terminals affects this, making it difficult to differentiate the small but important values one from another. The resistance of the primary is reflected through the transformer multiplied by the square of the turns ratio, to appear as an impedance in series with that of the secondary. This affects regulation, especially when high peak currents are drawn.

Examples for a 120V-to-2400V transformer:

Pri: 1.3 Ohms, secondary 200 Ohms

(1.3 * ((2400 / 120) * (2400 / 120))) + 200

(1.3* (20 * 20) + 200

(1.3 * 400) + 200

520 + 200

= 720 Ohms transformer impedance seen by rectifier

Voltage drop when current increased by 300mA = 216V

regulation = 216 / 2400 = 9%

Pri: 0.5 Ohms, secondary 100 Ohms

(0.5 * ((2400 / 120) * (2400 / 120))) + 100

(0.5 * (20 * 20) + 100

(0.5 * 400) + 100

200 + 100

= 300 Ohms transformer impedance seen by rectifier

Voltage drop when current increased by 300mA = 90V

regulation = 90 / 2400 = 3.75%

The next item is the rectifier. It should have as low a voltage drop as possible.

Gas and vapor rectifier tubes have about a 15 volt drop when conducting. Old Buzzards on AM prefer, and still use, mercury vapor rectifier or 'modern' Xenon gas replacements. The Mercury tubes are great, handle high currents and faults, and make a nice blue glow. Xenon glows a white-ish color. Such tubes are best mounted up front behind a glass panel to be seen, as their glow will flash along with the variable current required during modulation. The only disadvantage is that when a Merury vapor tube is broken, the few drops of liquid Mercury must be collected or cleaned up. Mercury vapor tubes require from 15 seconds to a minute to warm up, more if they have been shaken around. Xenon gas tubes usually require 15 seconds. Be sure to read the tue manuals about them.

Vacuum rectifiers are still made and widely available in medium to low power types. Their drawback is that they have a higher voltage drop with rated current, some times 100 Volts. Some more some less. People still find them attractive because they also stand surges and faults well. Like any tube they take a few seconds to warm up.

Solid state rectifiers are very popular and stacks of them can be inexpensively made up on a circuit board to handle several thousand volts. Each diode junction loses up to 1 Volt at maximum current. For this reason, so-called "plug-in replacements" for tube rectifiers sometimes yield higher voltage and better regulation. Take note of the voltage ratings of filter capacitors, so that they are not exceeded if using a plug-in replacement in place of an existing vacuum rectifier. It is also wise to add surge and transient protection when solid state rectifiers are in use.

In any power supply, a soft-start relay arrangement is advisable although the heaviest-built supplies are not easily damaged by in-rush current. They just pull it from the mains and handle it.

The best unregulated power supplies use a choke input filter. It makes the power supply heavier, larger, and more costly. In exchange for those small inconveniences, it also gives more suppression of ripple and better regulation than a capacitor input filter. The DC resistance of any chokes is added to the total impedance of the power supply. DuncanAmps.com offers a free power supply simulator that takes all of this into consideration. There is ample detail on these matters in

the handbooks for those having a pencil and paper.

Filter capacitors are another topic of interest. Oil is always best for high voltage, but a stack of electrolytics is sometimes used, especially in compact or cost-reduced modern equipment.

Care must be taken to avoid having too much voltage between the cans of adjacent electrolytic units or the voltage may arc though their plastic sleeves. The voltage on each electrolytic must be equalized with the others by means of a resistive divider. Some people make this the bleeder resistor as well, others prefer a separate high wattage bleeder so that the heat does not shorten the life of the electrolytic capacitors.

Oil capacitors have their disadvantages as well. They are large and heavy for the same energy storage, and in rare cases will leak, making a mess. Some old ones have PCB flame retardant in the oil, a somewhat hazardous chemical although far too much has been made of it in the gibbering media. It washes off. Never use a leaking capacitor because the oil is the insulator and if too much is gone the unit may fail. Those concerned with the possibility of an eventual leak may prefer to mount the capacitors with the insulators (seals) facing upwards. If in doubt as to whether a dirty old oil filter has been leaking, clean it with mild detergent taking care about the seals, and then lay it in a plastic tub to see if any fresh oil appears on its cleaned surfaces. Leaks are usually obvious, they leak or they do not. Those who do not want to use PCB oil capacitos should look for a factory marking "NO PCB's" on the case near the part number or ratings.

Recently, solid or "plastic" capacitors have become available in sizes suitable for high voltage use. These have neither oil not electrolyte and would seem to have an indefinite lifetime. They are the most expensive option. Illinois Capacitor is one company that makes them. Typical voltages are as high as 2000V.

Oil and solid capacitors may be stacked and equalized like electrolytics, and the equalizing resistors can be higher in value because of extremely low and uniform leakage in these types.

The electrical size and configuration of filters is decribed in the handbooks. Any high voltage capacitor can explode. They should be positioned in such a way that nothing major exits the cabinet if that should happen. It is very rare, as are leaks from oil filled filter capacitors.

Regarding the overall combination of inductance and capacitance, LC filters should always have component values that can not, when combined, resonate at 60Hz or 120Hz (mains frequency or multiples). If they do, components can fail and regulation will be degraded. One exception is the choke with a capacitor in parallel, tuned to twice the mains frequency to block the ripple. It is a special case and requires much higher voltage ratings. Hobbyists will sometimes mount a filter choke on an insulator to give it more protection against high voltage. In case of a resonant filter, this is not effective because the inductor in this service is as likely to arc inside within the windings as to ground.

In any high voltage installation where the capacitor bank stores a very large amount of energy, it is wise to make a high voltage fuse from a 4-5" long piece of wire, such as #30 (for <1 Ampere load current), to act as a HV fuse in case of a flash-over inside a tube or some other failure that would violently dump the capacitor bank. The thin wire will vaporize instantly.

This precaution applies mostly to voltages over 2000 and low-impedance capacitor banks of more than 20uF. The idea is to protect the RF amplifier or modulator tubes. The fuse may be placed between tall ceramic insulators in the HV line on the power supply chassis. It goes between the capacitor bank and the load. Some experimenters have used a 10 ohm 10 Watt wire wound resistor for this function. It will violently explode if the discharge is great enough and therefore should be placed where the flying pieces will not cause damage.

Automatic Vacuum-Tube Regulation Control for Bias- and Plate-Supply Power Packs

By Lester R. Yates, W1KQ*

IT GENERALLY has been unsuitable to use power-pack supply for grid bias of a Class-B stage, because of the poor regulation caused by the varying grid current flowing back through the bleeder resistor of the power supply. In order to obtain decent regulation, either a very low value of bleeder resistance must be used, or else the load on the power supply must be kept at a constant value. The former method is impractical because of the very low value of resistance which must be employed, which means that a very large amount of power will have to be dissipated by it. Therefore the second method described in this discussion; that is, maintenance of the load on the power supply at a constant value of practically zero.

As shown in Fig. 1, the stabilizer consists of a tube, across the output of the power supply, in a self-biasing arrangement. The resistor R_1 is on the order of several megohms, so that at no load the tube is biased practically to cut-off. The output voltage is then the total voltage of the supply minus the voltage required to bias the regulator tube to zero plate current. When current flows back through the regulator tube, as would happen if the power supply were being used to bias the grid of a tube which was being driven positive and was drawing grid current, the voltage across the regulator tube will tend to increase. This will cause the voltage across the biasing resistance, R_1, to decrease. Since the sum of the regulator tube drop and the drop through R_1 must equal the total supply voltage, as the voltage across R_1 decreases the bias on the regulator tube decreases, which causes the tube plate impedance to decrease so that the voltage across it tends to remain constant regardless of the current which is flowing back through it. This may be shown by the equations given in the Appendix, which were worked out for 200 volts bias on the basis of the regulator consisting of two 45's in parallel.

This equation in graphical form is shown in Fig. 2. On the same graph is shown also the curve obtained experimentally for the same conditions.

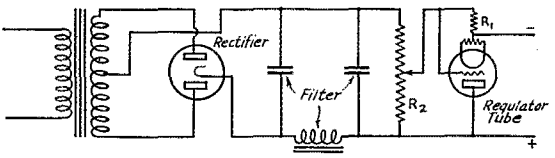

FIG. 1—CIRCUIT OF THE AUTOMATIC VACUUM-TUBE REGULATOR AS APPLIED TO A BIAS- OR PLATE-SUPPLY POWER PACK

R_1 is the regulator tube's bias resistor and R_2 is the power-pack output voltage divider. A separate filament winding should be used for the regulator. Design data are given in the text.

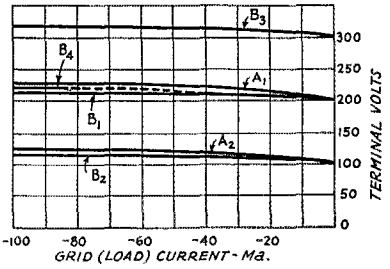

FIG. 2—REGULATION CURVES FOR A BIAS POWER PACK USING THE AUTOMATIC TRIODE REGULATOR. THE LOAD CURRENT IS NEGATIVE

Curves A_1 and A_2 are for a single 45 as the regulator.

Curves B_1, B_2 and B_3 are for two 45's in parallel.

B_4 is a theoretical curve plotted from the equation.

It may be seen that at the higher values of current the experimental curve is slightly better than that obtained by calculation. Curves are also shown for 100 and 250 volts. It may be seen that for any given load current the deviation of the curves from the no-load value is constant, so that the regulation varies inversely as the plate voltage. At high voltages, then, it would be practical to employ only one tube as a regulator, while at the lower voltages two or more tubes in parallel

(Continued on page 82)

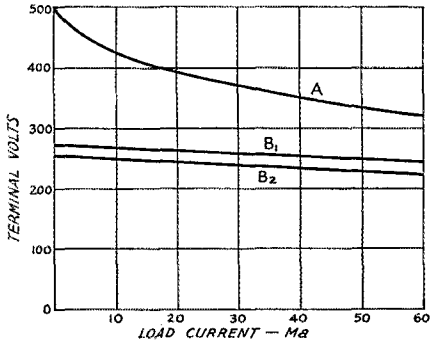

FIG. 3—TYPICAL REGULATION CURVES FOR A PLATE SUPPLY POWER PACK, THE LOAD BEING POSITIVE

Curve A was taken without the regulator. Curve B_1 is for a single 45 as a regulator and Curve B_2 is for two 45's in parallel.

*124 Webster Ave., Bangor, Me.

Don't Worry About That Exam!

CANDLER SYSTEM Will Make It Easy for You

The better class Amateur and Com'l op will tell you Candler Training in Code Fundamentals is as necessary to Skill and Speed as is a knowledge of Ohm's Law to an understanding of Electricity.

CANDLER shows you how to apply certain *Psychological Laws* in learning code quickly, increasing speed and copying behind. *No "robots" used. Here's what they say:*

"As champion Radio op for 13 years, official speed 56½ wpm., and holder of all-time American Morse speed record of 70 wpm., I can say that I never had any other training except CANDLER SYSTEM HIGH-SPEED TELEGRAPHING and 'MILL' COURSES."—T. R. McElroy, 23 Bayside St., Boston, Mass.

"CANDLER SCIENTIFIC CODE and 'MILL' COURSES made it possible for me to win the Radio championship in Class 'B'." — Jean Hudson, W3BAK.

"CANDLER Specialized Training helped me to pass rigid, competitive test for this position."—Richard D. Watson, Chief Operator, WHEW, Byrd Expedition.

"I owe my position as code instructor, Air Corps, Primary Flying School to CANDLER Specialized Training. I instruct over 200 student flyers in code every 4 months which requires absolute accuracy."—Carl W. Muller, 46th Squadron, Randolph Field, Texas.

"Am working trans-Pacific circuit between Honolulu and Frisco. Am combination op — American Morse and Continental. Hold a 1st class license. I could not have done this without the aid of Candler Specialized Training." — James Light, U. S. N. Radio Station WAILUPE, Honolulu, T. H.



Any skilled Amateur or Com'l op will tell you of the superiority and importance of CANDLER SYSTEM training. *FREE* — New *BOOK OF FACTS.* Contains inside information that will aid you.

CANDLER SYSTEM CO.
Dept. Q-9 6343 S. Kedzie Avenue, Chicago

QST TO ALL HAMS

CORNELL-DUBILIER CONDENSERS ARE YOUR BEST BET. MADE BETTER, WORK BETTER, LAST LONGER.

HIGH EFFICIENCY
LOW COST

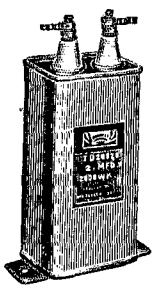

TYPE TD

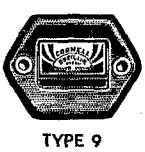

TYPE 9

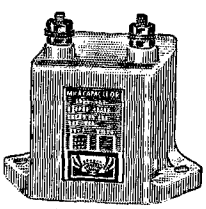

TYPE 86

Get a copy of catalog No. 126 listing the finest and most complete x-mitting line and COMPARE VALUES. 73 W2AFS

CORNELL-DUBILIER CORPORATION
JOBBERS' DIVISION
4373 Bronx Blvd. New York City

allows four 8-μfd. electrolytic condensers to be used in series in the filter, giving a total capacity of 2μfd. For anyone who is suddenly presented with one of the new high-voltage low-current tubes, or who is wondering how he is going to get any power out of his 211 without investing in a pair of 66's and a transformer when he already has one giving 500 to 750 volts either side of the center tap, this is pretty much what the doctor ordered.

So there we have crystal control, break-in and moderate power, all without a great deal of labor or expense. Could any reasonable ham want more at one sitting?

Automatic V.T. Regulation Control

(*Continued from page 37*)

must be used to maintain an equivalent regulation. The number of tubes which must be used in parallel, at any given voltage, will depend on the regulation desired, and also on the amount of load current. Probably a safe value of average plate current per tube used in the regulator would be 40 ma.

A single 2A3 is more than the equal of two '45's in parallel; in fact two 2A3's in parallel are the equal of five 45's in parallel. But as 2A3's cost several times what 45's do, on the basis of tube costs it is preferable to use 45's.

As the output voltage is lowered, it may be seen that it becomes necessary to increase the number of tubes in parallel to maintain good regulation, so that at low voltages it would be preferable to use batteries for bias, rather than an a.c. supply with this type of regulator.

The value of the resistor R_1 is not critical, so long as it is large enough to maintain the current drawn from the power supply at a very low value. Any value from a few hundred thousand ohms up to several megohms is satisfactory. The voltage divider R_2 can have practically any value, from a few thousand ohms up, as the current drawn is practically zero.

This type of power supply may also be used to supply grid bias to a Class-C stage, and has the advantage over using an unstabilized power supply, or a grid leak, in that the grid voltage will remain constant regardless of the value of grid current.

FOR PLATE POWER SUPPLIES

This type of regulator may also be used to keep the output voltage of a plate power supply constant, particularly to supply power to a variable load such as the plate circuit of a Class-B audio stage. The circuit used is the same as that used to stabilize the C-bias supply, except that the value of R_1 is reduced so that the current through the regulator tubes with no external load connected is at least equal to the maximum average current which will be supplied to the load.

When a load is connected, the current through

ACME-DELTA



for NEW RK-20 TUBES

COUPLING TRANSFORMERS

AD-92 for Coupling one 45 to RK-20 suppressor grid. List price, **$7.50**

AD-75 for coupling a pair of 2A3's or a pair of 45's to RK-20 suppressor grid. List price..... **$7.50**

(List prices subject to 40% discount at authorized Delta Distributors.)

Write for latest catalogue today

DELTA MANUFACTURING COMPANY
190 Willow Street, Waltham, Mass.

F. S. Dellenbaugh, Jr.
Pres. &
Ch. Eng'r

G. E. M. Bertram
Treas. &
Gen. Mgr.

UNIT OF RAYTHEON MANUFACTURING COMPANY

TRUVOLT RESISTOR

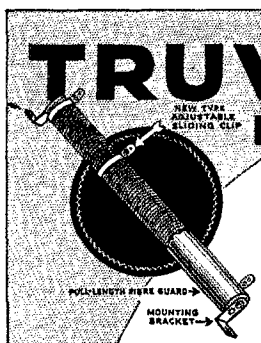

Safe for Amateur Work

1,000-volt breakdown provides an unusually high safety factor — plus these extra *exclusive* features:

1 — Patented design permits larger wire and open-air cooling. 2 — Double spiral winding insures perfect electrical contacts. 3 — Sliding clips provide exact adjustments to desired voltages. 4 — Full-length protective guard.

All Standard Sizes

Write Dept. Q-9 for FREE New Catalog and Vest-Pocket Volume Control Guide.

175 Varick St., New York, N.Y.
ELECTRAD INC.

the resistor R_1 will tend to increase. This will cause an increase in the bias of the regulator tube, which will decrease the current through it so that as the positive load current is increased the regulator current is decreased, thereby maintaining the load on the power supply practically constant, regardless of the load current. Fig. 3 shows the stabilized and unstabilized load curves for a power supply employing a Type 80 tube and a single-section filter with condenser input. In this case, the bias resistor was adjusted so that the current through the regulator tubes on no load was 60 milliamperes. This required a value of about 700 ohms for R_1. Curves are shown for a single tube and for two tubes in parallel. It may be seen that the regulation is practically the same for either the single tube or two in parallel, indicating that the number of tubes which must be used in parallel will depend solely on the peak load current. It might be advantageous to place a filter condenser across the output of the regulator, to take care of the peak current demands, and thereby reduce the maximum value of current which will be drawn from the regulator.

APPENDIX

$$I_p = K\left(E_g + \frac{E_p}{\mu}\right)^{3/2} \qquad (1)$$

where I_p = plate current
K = a constant
E_g = grid voltage
μ = amplification factor = 3.5 for the Type 45.

For a desired terminal voltage of 200 volts, cut-off bias voltage is:

$$\frac{E_p}{\mu} = \frac{200}{3.5} = 57.2 \text{ volts (negative)}$$

$$E_p = 257.2 + E_g$$

$$-E_g = 257.2 - E_p$$

$$E_p = \left[\left(\frac{I_p}{K}\right)^{2/3} + 257.2 - E_p\right]\mu.$$

Substituting representative values in Equation (1),

$K = 0.000614$ for two Type 45's in parallel

and

$$E_p = 0.777\left[\left(\frac{I_p}{0.000614}\right)^{2/3} + 275.2\right].$$

The Convention Season

(Continued from page 28)

auditorium of the Naval Armory—and that's some bunch of hams!

The proceedings started off with a virile address of welcome by the mayor of Perth Amboy, augmented by remarks on the part of the president of the Chamber of Commerce. Then Henry J. Kelley, president of the T.C.R.A. and hamfest general chairman, made a brief opening speech. (One of the best features of this hamfest, as a matter of fact, was the brevity of all the speeches.) The Nomads, a musical group of hams (we were

the wide frequency range mentioned above, Mr. Couppez uses a tuning condenser (C_2) consisting of a four-gang 500-$\mu\mu$fd. condenser, all sections being connected in parallel for the lowest frequency range and either three, two or one section being used for the higher-frequency ranges up to 1500 kc. Above 1500 kc. padding condensers built into the coil forms are placed in series with one tuning condenser section to cut the effective maximum capacity to 150, 100 or 50 $\mu\mu$fd. so that the spread will not be too great. The changes in condenser capacity are automatically made by appropriate coil-form pin connections.

The antenna coupling coil, L_1, is made exactly the same as L_2, the antenna tuning condenser, C_1, always being connected in series. Tuning the antenna circuit increases both sensitivity and selectivity. Regeneration is controlled by variable condenser C_5, having a maximum capacity of 500-$\mu\mu$fd.; a 500-$\mu\mu$fd. fixed condenser is connected in series with it to give smoother control on the short wavelengths. Coupling to the following audio stage is apparently through an ordinary audio transformer.

The tuning procedure used with this type of circuit differs in some respects from that commonly employed for regenerative reception. The detector part of the circuit should not be allowed to oscillate; the beat note for c.w. reception is obtained by proper setting of the heterodyne oscillator tuning condenser, C_6. The signal should first be tuned in by its carrier only, with the regeneration control well "down." Adjust C_1 to resonance and vary the coupling between L_1 and L_2, simultaneously readjusting C_1 and the detector tuning condenser, C_2, until the signal is strongest. The heterodyne condenser, C_6, should then be adjusted to give a satisfactory beat note, after which the detector regeneration may be increased, by adjusting C_5, until the signal is brought up to maximum volume. The loosest possible coupling between L_1 and L_2 usually will give the most satisfactory results.

The advantages of the separate beat oscillator have several times been emphasized in *QST*. Such an arrangement is particularly advantageous in an all-wave receiver such as the one used by Mr. Couppez, because the loss of signal strength caused by detuning an autodyne detector to obtain a beat note is considerable at the lower frequencies. A similar, although not as pronounced, difference in strength between autodyne and heterodyne reception exists even at very high frequencies, as the experimenter can easily prove to his own satisfaction.

874 For Stabilized Bias Supplies

Recent *QST* dope on "B" eliminators as bias supplies for transmitters has inspired several of the gang to send in information on using the 874 voltage regulator tube to keep the bias at a fixed value when voltage variations because of grid current flow become bothersome. For the benefit of those who may not be familiar with the tube, the 874 is a gas tube designed to maintain a constant voltage across its terminals under varying load currents, when used in connection with a power supply of inherently poor regulation—such as the conventional "B" eliminator. At a working voltage of 90, the tube will operate over a current range of 10 to 50 milliamperes.

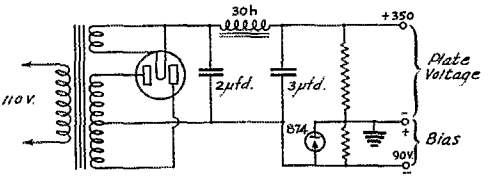

FIG. 3—PLATE AND BIAS SUPPLY USING AN 874 TUBE TO MAINTAIN CONSTANT BIAS

Fig. 3 is the diagram of a combination low-voltage plate supply and bias supply used by E. H. McRonald, W3EQS. A note from him says, "At present I am using a 'B' eliminator as a bias supply, and since the bleeder is of the order of 10,000 ohms, the regulation is fierce. After trying it I was almost ready to build one of the heavy-duty 'C' supplies when I thought of the old 874 voltage regulator tube. As this tube holds at 90 volts, it makes an excellent device for controlling the bias voltage of a 203-A or similar tube. A 5000-ohm automatic bias resistor is used in the grid return circuit and the 90 volts from the 'B' eliminator is used for fixed bias. The eliminator also supplies plate-voltage for the buffer stages and does the job FB.

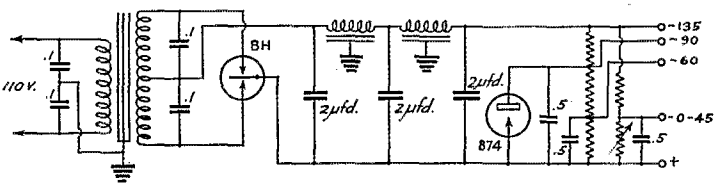

FIG. 4—ANOTHER BIAS SUPPLY CIRCUIT USING A BH GASEOUS RECTIFIER AND AN 874 VOLTAGE REGULATOR

"If a higher fixed bias is desired use two or more 874's in series. The regulation of this rig is darned near perfect."

V. L. Clark, W5ZW, furnished the diagram of Fig. 4. His "C" supply, which uses a Raytheon BH rectifier and the 874, has been giving satisfactory service for more than two years. The bleeder current is approximately 20 milliamperes,

the 874 being tapped in on the voltage divider at a point where it will draw 10 to 15 ma. Other taps for different bias voltages are also provided. The buffer condensers across the transformer windings are needed to prevent QRM to the BCL receiver resulting from the use of the gaseous-conduction rectifier.

W5ZW's bias supply takes care of the entire r.f. end of his transmitter—47 oscillator, 47 buffer and p.p. 10 amplifier—and also provides bias for two 250's in the modulator.

International Contest Results

(Continued from page 26)

Radio Club; W9FO (Art), Chicago Radio Traffic Association; W9CSB, The Illinois Ham Club, Wilmette; W9KA, The Illinois Bell Telephone Radio Club, Chicago; W9GUN, Heart of America Radio Club, Kansas City, Mo.; VE2AX, Montreal Amateur Radio Club.

F8PZ was disqualified for persistent off-frequency operation, reported by another contestant and substantiated by A.R.R.L. Official Observer reports. It is regretted that his score of 12,376 cannot be counted. Although W6FYT made a score in the vicinity of 23,000, no log was received from that station. W3ZD, although not competing, had a score of 11,100.

NOTES OF INTEREST

J2GX worked 249 different stations! ZS2A had 244 QSO's! These two chaps made more than one amateur happy by adding Asia or Africa for WAC awards! EA5BE, prominent Spanish participant, made 532 QSO's. A tidy number! Coincidence at G2ZQ: Betting the numbers 444444 twice and 222222 once. On each of the nine days of the tests G6QB used a different type antenna. G6LK's power supply consists of dry batteries; at the end of the contest there was more resistance than voltage! G6WY made six contacts in succession without touching the receiver—the W/VE hams were piled that thick!! ZT5R, being an Emergency Station, did not have much time for the tests; he was busy with traffic. D4BAR made 291 QSO's. D4BIU wonders why the Yankees use such a narrow portion of the 7-mc. band; he found about 90 to 95% of the W's worked between 7000 and 7100 kcs. W6EMK was visiting HB9J and did some of the contest operating there. W6's are rarely heard in Switzerland, but W6FYT and W6JJU were heard at HB9J several times. X1AA (who didn't hear that call?) made 553 QSO's. X1AM worked 291 stations. X1BC worked 160. NY1AB's snappy work will long be remembered by all who heard him in the tests—and who didn't hear NY1AB? K4SA worked 309 stations, using 'phone on 14 mc. as well as c.w. on 7 and 14 mc. K4KD, with no more than 30 watts input, worked 169 stations (51 on 7 mc., 118 on 14 mc.). CM2JM made 251 QSO's, CM1ML 201 (with 20 watts input!). F3MTA, only station on the air in Martinique, rolled up 284 contacts. ZL2CI and ZL4AI had a fast race for New Zealand honors; ZL2CI worked 344 stations, ZL4AI 326, but ZL4AI came out with a bigger score, thanks to contact with an additional district. ZL4AO and ZL4AI are located about 300 yards apart and were both on at the same time throughout the tests! The "longest" contest report came from HC1LC: it consisted of several sheets of paper pasted together, measuring about 82 inches long!! HC1LC worked 457 stations. What ham doesn't envy K6JPT his

X1BC (13).. 6136
X1CM (13).. 5031
X1N (11).. 4620
X1H (11).. 4180
X1CC (10).. 2040
X2C (7).. 742
X1BA (6).. 594
X2R (6).. 492
X2X (8).. 360
X1BG (7).. 238
X2B (4).. 116

Porto Rico—K4
K4SA (12)..11124
K4KD (10).. 5070
K4AOP (10).. 3528

Cuba—CM
CM2JM (14)..10403
CM2OP (10)..12960[22]
CM1ML (10).. 6030
CM2FA (10).. 5720
CM2MG (11).. 3740
CM2MA (11).. 3432
CM2AN (10).. 1710
CM2WW (7).. 539
CM2NA (7).. 441

Martinique—F
F3MTA (12)..10140

Panama—HP
HP1A (11).. 7667

Barbados—VP6
VP6MR (9).. 4491

Newfoundland—Vo
VO8Y (7).. 2604
VO8AW (8).. 928

Costa Rica—TI
TI2KF (10).. 2270
TI2EA (7).. 462

Brit. Honduras—VP4
VP4AA (9).. 1836

Haiti—HH
HH1A (9).. 1629

Jamaica—VP5
VP5CC (8).. 1032
VP5MK (9).. 540

Alaska—K7
K7CHP (4).. 984
K7ANM* (2).. 10

Bermuda—VP9
VP9R (8).. 792

Bahamas—VP7
VP7NB (7).. 455

Virgin Islands—K4
K4AAN (5).. 200

OCEANIA

New Zealand—ZL
ZL4AI (14)..13650
ZL2CI (13)..13273
ZL4AO (14)..11480
ZL2GQ (13).. 8229
ZL2GN (13).. 7293
ZL3AR (11).. 5544
ZL3CC (11).. 5181
ZL2KI (12).. 4884
ZL1AR (12).. 4104
ZL1GX (11).. 3817
ZL3AN (9).. 2979
ZL1CA (12).. 2160
ZL2BN (10).. 1670
ZL4FK (10).. 1650
ZL2OW (10).. 1620
ZL2FI* (10).. 1400
ZL2GG (10).. 1080
ZL4BT (13).. 780
ZL1HY (8).. 736
ZL1CK (7).. 630
ZL3HK (8).. 624
ZL1AK* (8).. 504
ZL1HD* (8).. 480
ZL2PC (5).. 305
ZL2MR (7).. 259
ZL3FK (6).. 198
ZL1CC (5).. 105
ZL2HR (3).. 84
ZL1BA (3).. 72
ZL4FW* (5).. 70
ZL1FT (3).. 63
ZL3FY (1).. 12
ZL2CW* (2).. 12

Hawaii-K6
K6IDK (12).. 9648
K6HQO (12).. 8748
K6BAZ (12).. 8424
K6BFI (12).. 8220
K6COG (13).. 6591
K6AKP (11).. 4037
K6CQZ (10).. 3690
K6ESU (11).. 3223
K6HLP (10).. 3190
K6JPD (10).. 1710
K6AJA (10).. 1530
K6CGK (5).. 730
K6CRU (6).. 414
K6JPT (6).. 312

Australia-VK
VK3MR (13).. 9412
VK3WL (12).. 8124
VK3KX (11).. 7612
VK4GK (12).. 6312
VK3ES (12).. 5016
VK5PK (10).. 3690
VK2OF (11).. 3663
VK7NC (11).. 3454
VK5MY (10).. 2460
VK2XC (10).. 2370
VK3GQ (11).. 2365
VK3ML (9).. 2277
VK2PX (10).. 2250
VK7JB (11).. 2112
VK4UU (11).. 1947
VK4BB (10).. 1900
VK7RC (11).. 1672
VK2DR (9).. 1485
VK2FZ (9).. 1404
VK2OC (9).. 1098
VK2JT (8).. 768
VK2YL (9).. 729
VK3KR (8).. 720
VK3RJ (8).. 664
VK2AV (9).. 630
VK2ZH (8).. 624
VK5SU* (9).. 621
VK3OC (8).. 584
VK3BW (9).. 576
VK2FM (9).. 513
VK3HL (6).. 486
VK5HG (7).. 399
VK3MX (8).. 384
VK3JQ (6).. 360
VK2HE (7).. 357
VK2OJ (6).. 276
VK2VC (6).. 252
VK2BP (6).. 234
VK3RX (6).. 228
VK3CX (6).. 180
VK2TH (5).. 125
VK2ZK (4).. 84
VK4EI (3).. 72
VK2FO (2).. 24
VK3EM* (1).. 3
VK3HM* (1).. 3
VK3HQ* (1).. 3

Philippine Island—KA
KA1NA (9).. 4644
KA1CS (2).. 228
KA1RC (3).. 117

Guam—OM
OM2AA (7).. 852[25]

Java—PK1
PK1HG (2).. 166
PK1VH (3).. 84
PK1CX (2).. 48

SOUTH AMERICA

Ecuador—HC
HC1LC (14)..19152
HC2HP (7).. 651

Trinidad—VP4
VP4TC (11).. 6391
VP4TB (10).. 1460
VP4TA* (7).. 413

Peru—OA
OA4J (10).. 4940
OA4U (8).. 1496

Aryentina—LU
LU1EP (11).. 4895
LU3FA (10).. 2540
LU2FC (9).. 2322
LU9BV (10).. 2140
LU7AZ (5).. 335
LU1CH (4).. 208
LU9AF (2).. 48

Brazil—PY
PY2BN (12).. 4620
PY1AW (10).. 1530
PY2BX (10).. 1400

Chile—CE
CE7AA (7).. 1932

Uruguay—CX
CX2AM (10).. 1360
CX2AF (2).. 12

More on Gaseous Voltage Regulators for Receiver "B" Supplies

By H. A. Robinson, W3LW*

We forecast that this season will see further concentration on the business of frequency stability in high-frequency receivers, particularly in a.c.-operated superhets of high selectivity. An important phase of this must be in voltage stabilization in receiver "B" supplies. Soaring and diving oscillator plate voltage, resulting from line voltage changes and variation in load current with operation of the r.f. gain control, is an all too common cause of oscillator frequency shift in present designs. Furthering QST's campaign in this direction, this article by W3LW gives quantitative practical data on gaseous-type stabilizers, equally applicable to regenerative and superhet receivers.—EDITOR

IN AMATEUR practice the necessity for a d.c. power supply capable of maintaining a really constant output voltage, unaffected by load variations and voltage fluctuations of the power line, has long been met only by the use of "B" batteries for the plate supply of receivers, frequency meters, monitors and the like. This requirement of constancy of plate voltage supply is one of paramount importance in the case of a high-frequency receiver. In the regenerative type of receiver, still widely employed both in amateur and commercial stations, optimum performance both from the standpoint of sensitivity and selectivity is obtained only with the regenerative detector operating within very close limits of the point of critical regeneration.[1] This is true for reception with the detector in both the oscillating and non-oscillating condition, and to maintain reception at the peak it is necessary that the "B" voltage fluctuation be not more than one or two tenths of a percent for even the most severe line fluctuations.

Although numerous regenerative receivers operating more or less satisfactorily with an unregulated a.c. power supply have been developed and marketed by several radio manufacturing companies within the past few years, their performance could be greatly improved if a power supply of more nearly constant voltage were available.

With the advent of the electron-coupled oscillator, characterized by the compensating effect of the screen and plate voltage variation on the oscillator frequency, the need for a well-regulated power supply for such an oscillator employed in a superhet receiver or in a frequency meter or monitor is less pronounced. However, even with such an oscillator the frequency is affected to some extent, and the amplitude of oscillation changes somewhat with power supply variations. In certain applications, as for example in superheterodyne receivers with insufficient oscillator excitation, the amplitude variation alone may prove seriously objectionable.

When an electron-coupled oscillator is employed as the regenerative detector,[2] the importance of a well-regulated power supply is not to be

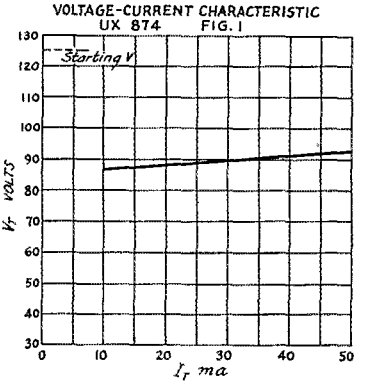

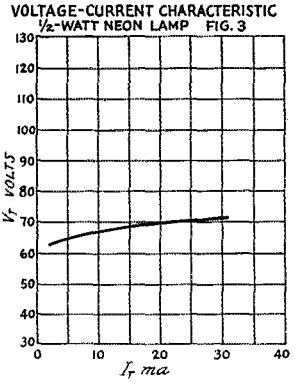

FIGS. 1 AND 3—VOLTAGE-CURRENT CHARACTERISTICS OF GASEOUS REGULATOR TUBES

* Silver Lake Farm, Willow Grove, Pa.

[1] Robinson, "Regenerative Detectors," *QST*, February, 1933.

[2] Grammer, "Rationalizing the Autodyne," *QST*, January, 1933.

overlooked if optimum performance is desired. This follows from the fact that when such an oscillator is employed as the regenerative detector for c.w. reception the tube is oscillating feebly near the point of critical regeneration, and slight fluctuations of the supply voltage will cause the

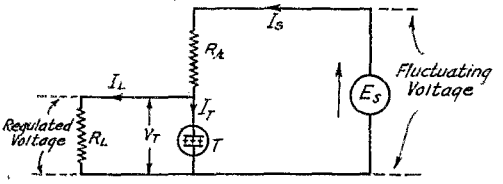

FIG. 2—THE EQUIVALENT CIRCUIT OF THE VOLTAGE REGULATOR

E_s—Source of fluctuating voltage (output of rectifier-filter).
V_T—Voltage across regulator tube.
I_s—Supply current to regulator.
I_T—Current through regulator tube.
I_L—Regulator load current.
R_r—Regulator resistor.
R_L—Load resistor (or equivalent).
T—Voltage regulator tube.

receiver to drop in and out of oscillation just the same as with the more usual type of regenerative circuit arrangement.

VOLTAGE REGULATOR TUBES

Now that we have seen the need for a rectified-a.c. power supply which will maintain substantially constant output voltages irrespective of the usual power-line voltage fluctuations, let us consider the ways and means of meeting it.

Limiting our problem to that of regulating the power supply for receiver oscillators or similar circuits requiring less than 30 milliamperes total current drain, we find the gaseous-tube type of regulator by far the most satisfactory at the present state of the art, when considered from the standpoint of reliability, compactness and low cost. The principles upon which such a regulator functions have been clearly explained in a previous article [3] and we will but briefly review them here.

When a d.c. voltage is impressed between two electrodes in a glass or other enclosure containing a small quantity of gas at low pressure, no appreciable current passes unless the voltage is greater than the ionization potential for the gas employed. Once ionization takes place, accompanied by a characteristic glow, the voltage across the tube remains practically constant at a value somewhat lower than the starting potential, for a considerable variation in current through the tube. The regulator tube thus functions as a device with a constant back e.m.f. and an extremely low internal resistance, the resulting current through the tube being determined by the external circuit arrangement.

For a number of years there has been available a tube of this type designated as the 874. The voltage-current characteristic of a typical tube is shown in the curve of Fig. 1. Let us now consider some of the problems in designing the most effective voltage regulator arrangement utilizing this characteristic.

Because of the low internal resistance of the gaseous type of regulator tube, a series resistor (R_r) which we shall call the regulator resistor, should always be employed. The equivalent circuit arrangement shown schematically in Fig. 2 results. From the simple mathematical analysis given in the Appendix, it is apparent that for a given load resistance R_L it is desirable to have the regulator resistance as high as possible, which implies working the regulator tube at as low a value of tube current as will permit its operation for the range of voltage fluctuation desired. This normal operating current can be read from the tube characteristic. Typical examples will be given later. It is important to note that in order to have the voltage regulator tube function at all, the voltage of the source E_S (filter output) must be greater than the starting or ionization voltage for the particular tube employed.

A NEON LAMP VOLTAGE REGULATOR

The versatile little neon lamp can be readily modified to function as a voltage regulator. The modification consists merely of removing the limiting resistor found inside the base. Slightly heating the base over a low gas flame and twisting it with pliers will loosen the cement. After the resistor has been removed the lamp may be mounted by cementing it on a tube base or other holder, taking care to mark the leads connecting to the internal elements. The characteristic curve of Fig. 3 was obtained with a G.E. ½-watt type

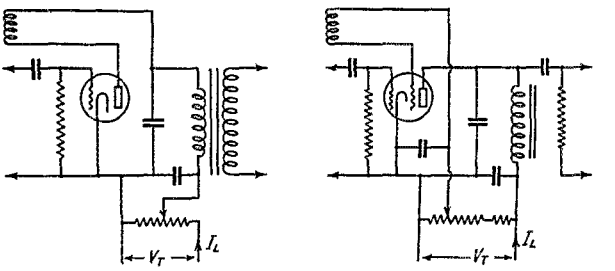

FIG. 4—APPLICATION OF THE VOLTAGE REGULATOR TO REGENERATIVE DETECTORS, A BEING A TRIODE CIRCUIT AND B FOR A SCREEN-GRID TUBE

V_T is the voltage across the regulator tube and I_L the regulated load current, as also shown in Fig. 2.

[3] Dekker and Keeman, "Stabilized 'B' Supply for A.C. Receivers," *QST*, October, 1932.

(Continued on page 84)

THE NEW TWIN INSTRUMENT

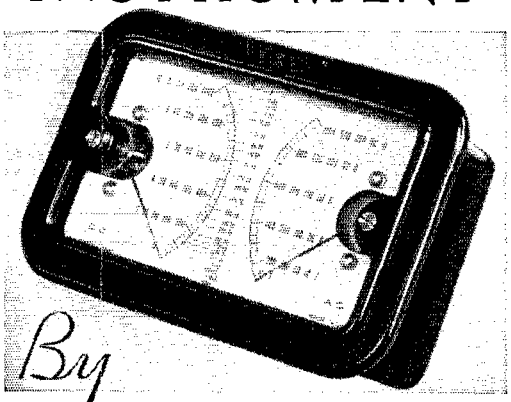

By TRIPLETT

THIS unit is appropriately named the "NEW TWIN" because it is made up of any combination of two DC or AC instruments. Both are housed in a bakelite case that takes up a minimum of space. This unit has many outstanding advantages: To take simultaneous readings of both instruments when connected in the same circuit, such as ammeters and voltmeters; to balance loads in three-wire circuits; to observe line fluctuations when load readings are taken; to measure antenna and modulation current; to determine filament and plate voltages. It has a multitude of other applications where quick, accurate, double readings are essential.

The scales of each instrument are arranged side by side. The pointers are always directed in the line of vision. No longer is it necessary to look from one meter to another. The "New Twin" enables you to observe two readings at a glance. The instrument accuracy itself may be lost several times its rated value if readings are not correctly made.

The combinations in the New Twin Triplett are made up of scales corresponding to the 3" individual instruments in single, double and triple ranges — AC-DC, Thermo-Couple and Copper-Oxide for panel mounting.

YOUR JOBBER CAN SUPPLY YOU

Triplett Electrical Instrument Company
110 Main Street, Bluffton, Ohio

MAIL TODAY FOR DETAILS!

Triplett Electrical Instrument Company
110 Main Street, Bluffton, Ohio
Gentlemen:
Please send your latest literature on the "New Twin" Instrument.

Name.....

Address.....

City.....*State*.....

became audible, but 100% readable. A W8 in Pennsylvania was copied for several minutes while producing less than a hundred-cycle beat. But the strange part was the action of the residual signal from the transmitter. It was noticed that a balance could not be maintained at absolute minimum for any period of time (incidentally this was still with a fairly good R8 signal), but rather the meter would fluctuate, returning every so often to the minimum point, sometimes even going below what was first thought to be the minimum, then moving up scale again. The first guess that this was caused either by the transmitting antenna or the receiving antenna, or both, swinging slightly in the wind and thus changing their relative positions, was unfounded; for there was no wind blowing and the action showed no definite periodicity. Hence the result could be explained only by assuming that fading phenomena were producing a change either in the amount or phase of the signal picked up by the receiving antenna. While this might be a change of only one part in one thousand, still the balance obtainable was exact enough so that the magnitude of this variable portion became large when compared to the unbalanced residual.

More on Gaseous Voltage Regulators

(Continued from page 50)

neon lamp modified as described and having the spiral element as the cathode (negative terminal).[4] The tube will function with the spiral element as the anode (positive) but does not give quite as flat a characteristic. The starting voltage is of the order of 90 volts for this connection. With normal current not exceeding 17 ma. the tube is working at or below its normal rating and should

TABLE I

Voltage Regulator Tube	UX874	½ Watt Neon
E_S	250	250
V_T	88.5	68.2
I_L	3	2
I_T	20	15
I_S	23	17
R_r	7020*	10,640*
Change in E_S	±3%**	±3%**
Corresponding change in V_T	±0.12%	±0.15%
Improvement in regulation	25:1	20:1

* In practice use nearest standard value.
For E_s=200 v; R_r=4900 and 7800 ohms respectively.
** Typical line fluctuation at short intervals.

have an indefinitely long life. The voltage across the tube for this current is slightly over 68 volts for this particular lamp. The larger neon lamps will carry more current and have slightly different, but similar, characteristics.

OPERATING AND DESIGN DATA

As a typical example, let us consider the application of the voltage regulator tube to a regenerative receiver. Only the regenerative detector will

[4] Newer type tubes have semi-cylindrical elements — either element can be anode.

THE IMPROVED CATHODE-RAY OSCILLOSCOPE

Linear sweep model for broadcast stations and advanced amateurs, physics labs., etc.

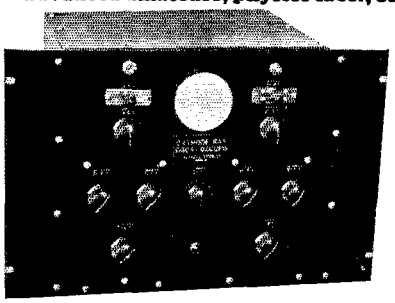

★ Controlled linear sweep. ★ Controlled external sweep. ★ Freq. locking device for sweep frequency. ★ Picture centering adjustments. ★ Wide range focus adjustments. ★ Complete component shielding. ★ Unit is self contained and includes batteries and 110V-60 cycle power supply. ★ Tubes RCA 906–885–234–281–280. ★ This instrument embodies all features ordinarily contained in only the highest priced Cathode Ray equipment.

Completely Equipped Ready to Use

F.O.B. Newark — $97.50

Literature now available

★ R.F. Reactors ★

Specially designed for the Amateur bands. These units present a far higher impedance to R.F. than the R.F. Chokes you are now using. This is a brand new idea that you will hear more about soon. Meanwhile you might send us a 3¢ stamp for some red hot dope on R.F. Reactors.

TUBES

210

15W

Large Plate

$1.15

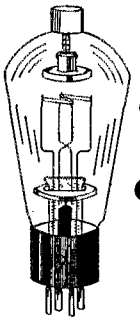

866

1000 hr. Guarantee

New Construction

$1.35

DUPLEX POWER SUPPLY

1100v. 250ma.
550v. 250ma.

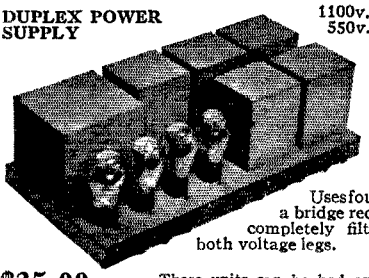

Uses four 83's in a bridge rectifier — completely filtered in both voltage legs.

$35.00

These units can be had on special order in any size, mounting, or form.

We are specializing in transmitter construction to customers' orders and specifications. Write for quotation on your favorite transmitter.

Special code classes for beginners. No charge. Telephone for appointment.

KALTMAN & ROMANDER

62 Court St. **Newark, N. J.**

need to have its voltage supply regulated. In the case of triode detectors, transformer coupled, the circuit arrangement will be similar to that of Fig. 4A. With a screen-grid detector, either electron coupled or of the standard form, it will be necessary to feed the plate through a choke or audio coupler because of the low plate voltage available. A typical arrangement employing screen-grid feedback is shown in Fig. 4B.

Because of the various tube combinations and operating points, for purposes of illustration we will consider the total current drain (I_L) for both types of detectors as 3 ma. at 88 volts (V_T) and 2 ma. at 68 volts. Referring to Fig. 2, taking E_S, the output voltage at the filter bleeder, as 250 volts and employing the relations deduced in the Appendix, the typical performance data given in the table are obtained. The very considerable improvement in voltage regulation is self evident and is typical of that obtained under actual operating conditions.

Appendix

CIRCUIT RELATIONS OF A VOLTAGE REGULATOR TUBE

Referring to Fig. 2 and applying Kirchoff's Laws:

$$V_T = R_L I_L \tag{1}$$

$$E_S = V_T + R_r I_S = R_L I_L + R_r I_S \tag{2}$$

$$I_S = I_L + I_T \tag{3}$$

$$E_S = R_L I_L + R_r I_L + R_r I_T \tag{4}$$

$$E_S = \left(\frac{R_L + R_r}{R_L}\right) V_T + R_r I_T \quad \text{substituting (1) in (4)} \tag{5}$$

$$E_S = \left(1 + \frac{R_r}{R_L}\right) V_T + R_r I_T \tag{6}$$

Designating the changes in voltages and currents resulting from line voltage fluctuations by ΔE_S, ΔV_T and ΔI_T respectively:

$$E_S + \Delta E_S = \left(1 + \frac{R_r}{R_L}\right)(V_T + \Delta V_T) + R_r(I_T + \Delta I_T) \tag{7}$$

$$E_S + \Delta E_S = \left(1 + \frac{R_r}{R_L}\right) V_T + \left(1 + \frac{R_r}{R_L}\right) \Delta V_T + R_r I_T + R_r \Delta I_t \tag{8}$$

subtracting (6) from (8)

$$\Delta E_S = \left(1 + \frac{R_r}{R_L}\right) \Delta V_T + R_r \Delta I_T$$

For a given fluctuation in the voltage of the source ΔE_S, resulting from the supply line fluctuation (since our purpose in employing the voltage regulator tube is to minimize the variation of the regulated voltage ΔV_T) it is desirable to have the coefficient of the term in ΔV_T, and also the second term on the right-hand side as large as possible. Both of these conditions require the regulator resistor R_r to be as large as possible.

Book Review

Signals and Speech in Electrical Communication, by John Mills. Published by Harcourt, Brace and Co., New York. 281 pages.

"Tell them what they need to know and no more." Taking it as his position that every member of the lay public should be possessed of a minimum knowledge of the art of electrical

Grid-Controlled Rectifiers for Amateur H.V. Power Supplies

THE possibility of using thyratron tubes to combine rectification with a keying system has intrigued more than one amateur, but the idea has never gotten very far because suitable tubes have not been readily available. Now comes an announcement from Eitel-McCullough, Inc., of a new grid-controlled mercury-vapor rectifier tube to be known as the KY21, a tube designed specifically for this purpose. The KY21 is a heavy-duty rectifier, a pair of them being capable of delivering 3000 volts at 1 ampere d.c., using a choke-input filter.

A peculiar characteristic of the mercury-vapor tube with a grid is the fact that once the tube starts conducting the grid loses control. Thus, it is possible to block off plate current provided sufficient negative bias is applied to the grid *before application of plate voltage*, but if the bias is afterwards reduced to the point where plate current begins to flow and the mercury ionizes, the space charge disappears and the grid has no effect. When such a tube is used as a rectifier, the alternating plate voltage of course reaches zero and becomes negative during half of the cycle, during which period the grid again assumes control. Hence it is possible to use grid control at keying speeds, with the advantages that the keying is positive and that but negligible power need be broken in the actual keying circuit.

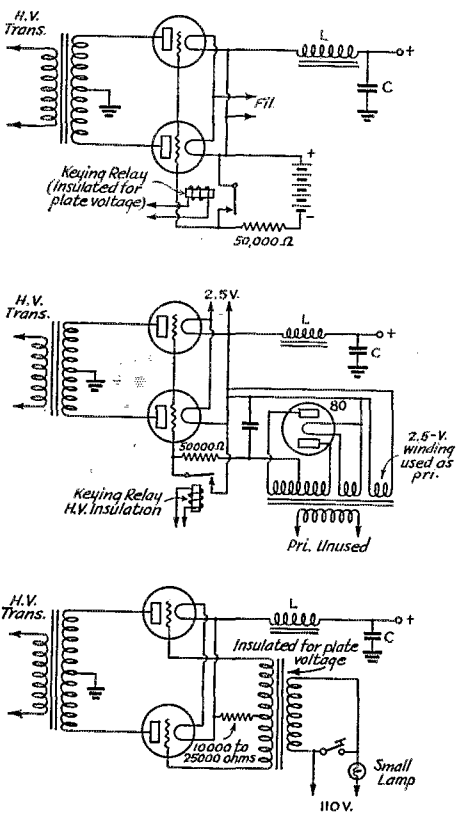

FIG. 1—TYPICAL CIRCUITS FOR GRID-CONTROLLED RECTIFIERS

Since the power handled by the keying relay is negligible, almost any kind of contact will be satisfactory. Workable ones were made from old trickle-charger automatic switches by W6UF-W6CHE, who supplied the diagrams. The contacts were remounted on bakelite "outriggers" to provide the essential high-voltage insulation.

Several circuits suitable for use with the tubes are shown in Fig. 1. A fundamental arrangement is shown at the top; the battery simply represents a source of bias voltage, which may actually be furnished by a simple power pack. In this case the bias transformer secondary must be insulated from the core and primary for at least the peak power transformer voltage, which in the case of the usual choke-input supply will be about 60% higher than the d.c. output voltage. A keying relay similarly insulated must be used.

The second circuit shows a suitable bias supply using an ordinary b.c.l. power transformer and an 80 rectifier. The 2.5-volt winding (which usually is heavy enough to handle all the power necessary —about 15 watts) is used as a primary, and since it gets its power from the rectifier filament transformer, no special insulation is necessary except to see that the whole transformer is well insulated from ground. The keying relay, however, must still be insulated as before.

The lower diagram shows an all-a.c. circuit using a transformer with high-voltage insulation. The secondary is center-tapped, with its outside ends connected to the grids of the rectifier tubes. The polarity must be such that when the transformer primary is energized the induced voltage will place a negative potential on a rectifier grid at the same time that the power transformer is running the plate positive. The resistor in the center tap is to limit grid current. The lamp in series with the a.c. line limits the current flow when the primary is shorted out by the key. Alternatively, a back-contact key or relay can be used in series with the primary.

The grid voltage required to prevent plate-current flow depends upon the plate voltage employed. The tubes have a rather low mu, since the lower mu has been found to give more desirable all-around operating characteristics. At 2000 volts, about 100 volts negative on the grid is re-

(Continued on page 37)

W2GVX W2GVZ W2HAK W2HQG W2HZJ W2IEZ W2JEQ W2JTC W2KFB W2LR W3DIA W3EWI W3FCQ W8ABN W8AIE W8DOD W8EMW W8EWP W8JGX W8KXA W8LDA W8NVK W8PSM W8PWU W8QCH W8QIR W8RAO Gordon S. Gregory. *Fourth Naval District:* W2DDV W2FRF W2GRY W3ABE W3ADE W3AKB W3ANZ W3BYR W3COV W3CRS W3DGC W3DGM W3EDC W3EFH W3EHZ W3EON W3EWT W3EYT W3FGX W3FIG W3FJK W3FKT W3FPM W3FTX W3FZH W3GJT W3GUD W3HAT W3MH W3QV W8CUG W8EU W8FQL W8FUW W8IUY W8JZ W8KRT W8LUG W8MKQ W8MOT W8NCJ W8NZR W8OEM W8OFO W8QAN W8RQ Arthur C. Jacoby, Lester W. Krute (W8CVS), Donald Leslie, P. Frederick Long, Eldon Stanford, Edward Tong. *Fifth Naval District:* W3AU W3BJX W3BWT W3CDG W3CJT W3CPM W3EEN W3FNG W3FPQ W3FSP W3FYJ W3FYQ W3GKN W3GKZ W3GRX W3GXV W6OME-3 W8CYV W8IGO W8MCL W8NLE W8PSR R. Bradley, Edward Day, Joseph A. Haefner, J. C. Harper, William Y. McPherson, Elbert R. Puffenbarger. *Sixth Naval District:* W4AGI W4CQ W4DW W4EBA W4ECZ W5GOH S. L. Diggle, Jr., Orbra Harrell. *Seventh Naval District:* K4KD K4RJ W4AFC W4AGR W4AIJ W4CZS/EMK W4DVO W4DYZ W4EFM W4EZ Daniel S. Griffin. *Eighth Naval District:* W1ART-4 W4ABY W4CRP W4CW W4DQW W4EOY W4ETN W4EUT W4OI W5ASQ W5BCW W5BMI W5BNO W5BWN W5CEZ W5CPB W5DAK W5DAQ W5DDJ W5DGB W5DWN W5ESK W5FAJ W5FNV W5FVJ W5GER W5GJW W5KC W5OJ W9IHO W9SOB Lyman M. Edwards, Samuel L. Miller, Madison Monroe, Milburne O. Sharpe. *Ninth Naval District:* W1BGL-9 W8AXV W8BKM W8CHO W8FX W8HRA W8LAG W8LCR W8NDL W8OCN W8PP/UU W8QLO W9AA W9AGQ W9AHY W9AIR W9ANV W9ARH W9AUH W9BQM W9CDA W9CTZ W9DEB W9DI W9DJA W9EGS W9ELL W9EMN W9EYH W9FEU W9FFD W9FNQ W9FYX W9GFL W9GRH W9HDP W9HPG W9KJX W9KJY W9KUI W9LEZ W9LGZ W9LQU W9LWW W9MFH W9MYL W9NGS W9NMZ W9NNM W9NVF W9PYF W9QAB W9RKV W9RLB W9RQR W9RTN W9SIL W9SKR W9TGN W9TH W9THD W9TKX W9TWV W9UEU W9VEE W9VWY W9VZS W9WDD W9WGU W9WYA W9YPI W9ZQW W9ZTN W9ZUO J. H. Cartwright, Phil G. Hill, W. W. Read, W. J. Wagner. *Eleventh Naval District:* W5ENI W5ZM W6ALO W6BIH W6CGY W6CLY W6EC W6HBD W6HG W6HOS W6IIK W6JAR W6LDM W6LKB W6LRF W6MGS W6MHX W6MLJ W6MRT W6NDF W6NXT W6NYN R. B. Walling, Raymond A. Wood. *Twelfth Naval District:* W6ADB W6AHK W6BLZ W6CUZ W6DHE W6ECW W6EJA W6FYM W6JAT W6NKQ W6OBK W9CIW W9ESA W9FA W9LZA W9RTQ W9SBB W9TDS W9TSQ W9TTD W9WTW Fred M. Hoehn, Robert S. Howland. *Thirteenth Naval District:* W7ATN W7AZY W7BKZ W7BMX W7DJS W7EBS W7EGG W7EQC W7ER W7ESV W7GCO W7GDF W7GGW W7LD Luther L. L. Dilley, John D. Hertz, H. E. Thomas. *Fourteenth Naval District:* K6MV W. K. Harris.

The remaining 279 participants on the Honor Roll follow. They are classified by Naval Districts and are listed under their respective districts in the order of rating. Where calls or names are connected by dashes, it indicates that these participants have equal ratings and are listed in a group, alphabetically and numerically.

First Naval District: W1ATK-W1DUK-W1EF-W1FPS-W1GDI-W1HML-W1JID-W1JOW-W1JSK-Boardman H. Chace-Leslie T. Malmgren W1EPE-W1IWC-W1IYC-W1NK-George F. Cook W1DGW-W1FQP-W1IVG-W1JGP-W1KBC W1VF. *Third Naval District:* W1ADW-W1HXZ-W1ITI-W1KAA-W2AER-W2BOT-W2FIP-W2JFB-W2KHN-W3ZI-W8ABX - W8BDC - W8GWY - W8JQE-Stephen M. Fox-Wm. Scullion-Wm. C. Tooker W1BHM-W1BYW-W1JJL-W2AUP-W2HOA-W2JGE-W8COD-W8DT-W8LGR-W8NUA W2HGL-W2HTD-W2VG-W8QKM W2JWT W1JXP-W2JUC W1APW W2KVC W2JBN-W2KFZ W2BAF. *Fourth Naval District:* W3ATJ-W3CHL-W3DNU-W3DXK-W3EBO-W3ELI-W3FEG-W3FI-W3FPC-W3FPG-W3FZO-W3GYY-W3ID-W8OML-W8QBK-Edwin B. Rhoads W3CNP-W3GJQ-W8BKS-W8FLA-W8VI W3AR-W3DYB-W3FFE-W3SB W3AEJ-W8NPQ W3GTJ W3FYK-W3GMK W3BGD W3GYB. *Fifth Naval District:* W3GBC-W3GMG-W3GPC-W8JA/3-W8LBI-W8OHW W3GWF-W8ELO-W8OLV-W8PTJ W8NCD W8OFE W8BWK W3HBG W3CYV-W8MLW W9WNK-3. *Sixth Naval District:* W4AGF-W4DEF-W4DFC-W4EOJ-W4EUX-B. E. Ketchie W4AAR W4CSO W4DKM. *Seventh Naval District:* W4AOZ W4DQA-W4KY W4JO. *Eighth Naval District:* W4APU-W4DXQ-W4QU-W5BAM-W5BKH-W5BRQ-W5CEE-W5ELM-W5EOE-W5FBQ-W5FHA-W5FTW-W9SMV W4DGC-W4DIX-W4RO-W5CWW-W9PAN-H. L. DeWalt-Arthur P. Kay, Jr. (W4ACC)-Lena E. Kay (W4ACC)-Francis Wm. Taylor (W4PBW/HQ)-J. F. Sullivan (W4PBW/HQ) W5CVO-W5DOM-W5EOW W5DXQ-W5EZY W4CDE-W4EUC-Jerome H. Codington-Fritz Ossenbeck W5FRB-C. G. Lodel-Robert Rudesill W4AXP W5ERV. *Ninth Naval District:* W1JHU-8-W8BKE-W8FTW-W8FWU-W8HMH-W9AKT-W9CGV-W9FOQ-W9GMT-W9GWT-W9LLD-W9ORP-W9PCC-W9QDP-W9RSJ-W9SO-W9SQG-W9WJV-W9ZGB-W9ZMP-W9ZTR-J. Russell Thorburn W9AZR-W9EPT-W9FAI-W9FWS-W9LGR-W9NUR-W9NVX-W9RZU-W9YGF-W9ZHD-W9ZOO-Harry Anderson W8AFK-W8BRS-W8DWP-W9DBO-W9IGZ-W9IMV-W9RWS-W9VKN W9TCM-Rudolph Joseph Blaho-W. J. McGuffage W9JTF-W9PB W9HUB-W9UEG-W9YMX-Joseph Takacs W9PDS W8RFF-Milton O. Kangas W9GEN W9KCJ. *Eleventh Naval District:* W6AE-W6KHK-W6KNL-W6NDV-W6NSQ-W6OON-John E. Pitts, Jr. W6DSN-W6EGJ-L. J. Sluyter W6MMO W6PAY W6OJN Eric Laue W6GST W6CIW. *Twelfth Naval District:* W6AOA-W6DIY-W6JZJ-W6LGE-W6MUC-W9JFD-Julio Sannazzari-Jamieson D. Vawter W6AK-W6JAC-W6KDM-W6MCS-W6NTA-W9GLI-W9LQO-W9USP-Homer D. Jaggers-Donald Sturtevant-Allan Brodnax W6PN W6GRB. *Thirteenth Naval District:* W7ACF-W7AFX-W7DJJ-W7EHO-W7EWR-W7FFQ W7AND-W7BOZ-W7CBT-W7TK-Arthur W. Emigh-William Samuelson W7BCV-W7ESO-W7OS Ralph W. Lindahl-Frank A. Kalberg-Fred B. Dyer W7DPW 7AMG W7AVU W7CWN W7BIR. *Fourteenth Naval District:* L. D. Paulson. *Miscellaneous:* VE4CQ Albert Freeman.

Grid-Controlled Rectifiers

(Continued from page 34)

quired for cut-off, with other plate voltages calling for proportionately higher or lower bias.

As compared with straight primary keying, it is said that the "tails" are considerably less with this system for the same amount of filter, possibly because of elimination of transformer lag and arcing at key contacts. The method is noteworthy for its elimination of key clicks with high power.

The cathodes of the new tubes take approximately 10 amperes at 2.5 volts. Rectifiers of similar ratings but without grids are also soon to be made available. These will be the Type RX21.

—*G. G.*

Regenerative Receiver

(Continued from page 18)

possibility of metal surfaces in contact producing a buzzing sound.

Like all receivers this one presupposes a reasonable antenna and a suitable power supply. Since most amateurs have their own receiver power supplies, it is not considered necessary to describe a particular design. For minimum hum, a well-filtered supply should of course be used for head phone and voice reception.

Grid-Bias Power Packs

An Analysis of Their Operation and Some Practical Design Pointers

By N. M. Patterson,* W4EG

The author takes a.c.-operated grid bias supplies apart to see what makes them tick, and uncovers some rules to follow to get the wanted results. Practically eliminates the guesswork in building that bias supply for the new transmitter.—EDITOR.

THE matter of grid-bias supply is not a serious or complicated one with low-powered transmitters, but it does present some real difficulties when one starts construction of a multi-stage high-powered rig. The writer was interested in building a separate power supply with the necessary voltage and voltage regulation to bias the several stages of a one-kilowatt transmitter. Information as to the correct bias power supply voltage, bleeder load and resistance values to give the necessary cut-off and operating bias voltages for each stage, with the required voltage regulation and the explanation for these requirements, were not obtainable in a form which satisfied our interest in the subject. So a power supply was built up and several tests, under actual operating conditions, were made in an effort to understand fully its behavior. The results of these tests are described briefly in the hope that they will serve to aid others in a better understanding of this subject.

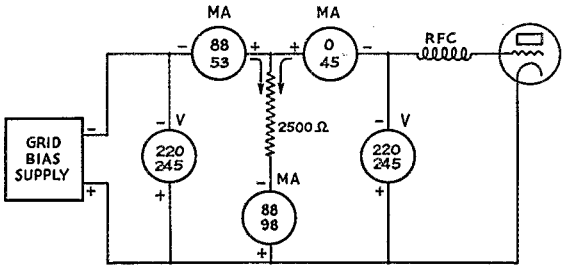

FIG. 1—TYPICAL CONDITIONS IN A BIAS SUPPLY USING A LOW-RESISTANCE BLEEDER, AND WHERE THE VOLTAGE DEVELOPED AS A RESULT OF GRID-CURRENT FLOW DOES NOT EXCEED THE SUPPLY VOLTAGE

The first series of tests gave results that were puzzling, and efforts to calculate what the tests should show quickly proved that something was haywire. It became apparent that several things were to blame, including errors attributable to the unknown voltage regulation of the bias supply, to the possible 10% plus or minus variation in resistors, to the possible variation in meters, to grid current leakage through the bias supply, and to the additional current through the voltmeters shunted across the circuit.

While preparing to make a curve of the voltage and current of the bias supply, it occurred to us that with measured resistances and currents, the voltage for any set of conditions easily could be calculated by Ohm's law, so no curve was made. The several resistors used in these tests were measured by using the series-connected battery, milliammeter and resistor method. None of the resistors showed departures of less than 5% from the value printed on the label, one being more than 20% off. The milliammeters were connected in series and found to vary as much as 3% at some current values. Obviously, to obtain consistent results, only one meter should be used, plugging it in to read the current in each part of the circuit.

Leakage of grid current through the supply was found to be negligible unless very high voltages were developed. In one test with a very high resistance and high grid current, nearly 1500 volts was developed and caused about 5 ma. leakage through the supply. Meters placed in the supply circuit indicated that all, or nearly all, of this was leaking through the 4-μfd. filter condenser in the output of the supply. We believe that the rectifier tube prevents any grid-current leakage through the supply transformer.

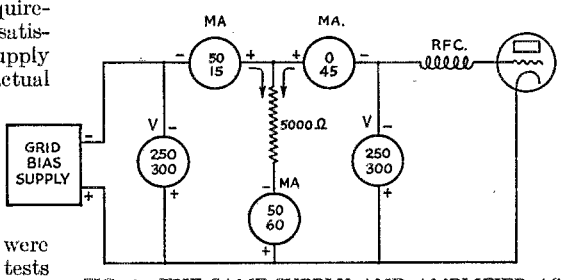

FIG. 2—THE SAME SUPPLY AND AMPLIFIER AS IN FIG. 1, BUT WITH A BLEEDER OF HIGHER RESISTANCE

To avoid upsetting circuit conditions, it was decided not to use the voltmeters except as a

* 2804 Hillsboro St., Raleigh, N. C.

check on the calculated voltages. In practice the meters usually read slightly different voltages than those found by calculation, but were always close enough to prove the point.

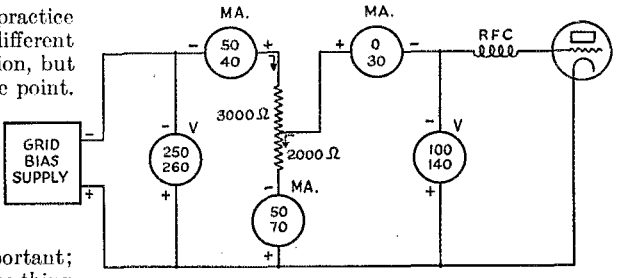

FIG. 5—A CASE WHERE THE SUPPLY VOLTAGE IS GREATER THAN THE DESIRED GRID BIAS

SUPPLY BEHAVIOR

With all these variables confronting us it was seen that it would require laboratory equipment to pin the results down exactly. However, for our purpose a small error is not important; what we really want is to understand the thing so that we can get the best possible results with the least effort.

Speaking broadly, the supply generates a substantially fixed voltage while its current may be anything from zero to full load. The grid is exactly the opposite, generating a substantially fixed current while developing a voltage across an external resistor anywhere from zero to a high value. When we connect the supply and the grid circuits across a common load resistance (bleeder-grid leak) any voltage developed by the flow of grid current is in parallel with the supply voltage. Since parallel voltages do not add, then if the grid current develops less voltage than the supply, the voltage across the resistor will be the supply voltage only. If the grid current develops more voltage than the supply, the voltage across the resistor will be only that resulting from grid-current flow.

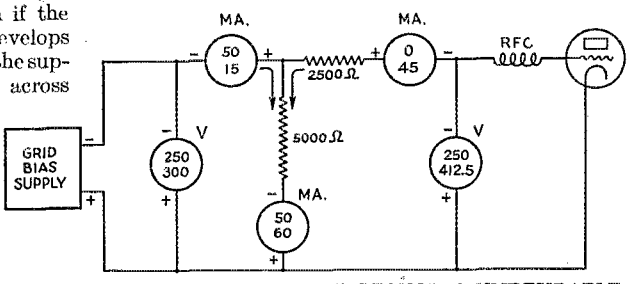

FIG. 4—SUGGESTED CIRCUIT FOR REDUCING UNDESIRABLE EFFECTS OF VOLTAGE DEVELOPED FROM GRID-CURRENT FLOW

So long as the bias voltage is substantially fixed by the supply—i.e., up to where the grid current develops more voltage—the current that can flow also is substantially fixed because, since grid current must flow and supply current need not flow, a rise in grid current causes a drop in supply current or a drop in grid current causes a rise in supply current. The currents behave in see-saw fashion—as one goes up the other comes down.

If the supply voltage regulation is perfect, the rise in grid current will be equal to the fall in supply current, and vice versa, because with a fixed voltage, the total current must be fixed also. However, no supply will have perfect voltage regulation, and when the rise in grid current causes a drop in supply current, the load on the supply is reduced, in turn causing the supply voltage to rise. This rise in voltage increases the voltage across the bleeder-grid leak, thereby increasing the total current flow, with the result that the drop in supply current will not equal the rise in grid current.

From this we learn that any change in bias voltage for any condition where the grid current develops less voltage than the supply is due entirely to the voltage regulation of the supply. If the grid current develops more voltage than the supply, the supply current will drop to zero with its voltage as high as it can go at no load and the supply could be removed without changing the bias voltage or the current through the grid leak neglecting possible small leakage.

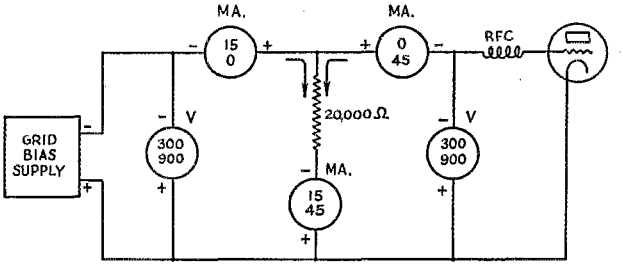

FIG. 3—CONDITIONS EXISTING WHEN THE VOLTAGE DEVELOPED FROM GRID CURRENT EXCEEDS THE SUPPLY VOLTAGE

EXAMPLES

The series of diagrams illustrates several practical sets of operating conditions. The circles represent milliammeters and voltmeters with the meter readings written inside. The top reading is the current or voltage at zero grid current; the bottom reading is with grid current

flowing, and shows the change in current or voltage due to the flow of grid current.

With grid current at zero, Fig. 1, the supply delivers 220 volts and 88 ma. to a 2500-ohm load. When 45 ma. grid current flows the supply current drops to 53 ma. and the reduced load on the supply caused its voltage to rise to 245 volts. This

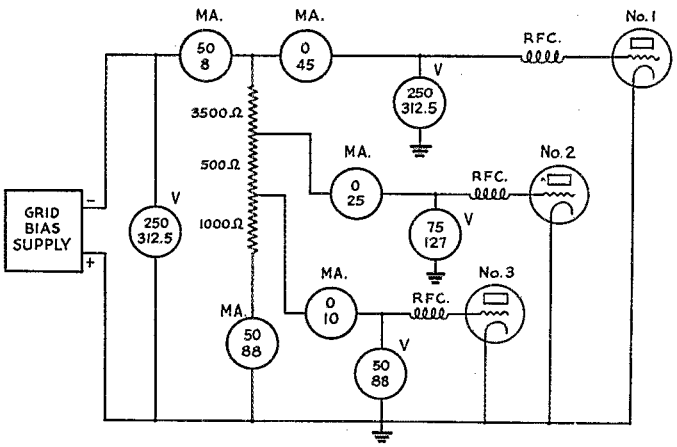

FIG. 6—AN EXAMPLE OF CONDITIONS EXISTING WHEN ONE BIAS SUPPLY HANDLES THE REQUIREMENTS OF SEVERAL AMPLIFIER STAGES

25-volt rise adds 25/2500 = 0.01 amp. or 10 ma., so that the total current is increased to 98 ma., of which 45 ma. is grid current and 53 ma. is supply current.[1] The grid voltage regulation is 25 × 100/220 = 11.4%, which is not bad.[2]

In Fig. 2 the resistance is increased to 5000 ohms. With the higher load resistance the load on the supply will be lower and its voltage higher, so at zero grid current the supply delivers 250 volts and 50 ma. When 45 ma. grid current flows, the supply current drops to 15 ma. and the reduced load on the supply caused its voltage to rise to 300 volts. This 50-volt rise adds 50/5000 = 0.010 amp. or 10 ma. so that the total current is increased to 60 ma., of which 45 ma. is grid current and 15 ma. is supply current. The grid voltage regulation is 50 × 100/250 = 20%, which is not as good as in Fig. 1.

In Fig. 3 the resistance has been increased to 20,000 ohms. At zero grid current the supply delivers 300 volts and 15 ma. When 45 ma. grid current flows, the supply load is reduced to zero and its voltage increases to a value approximately 1.41 times the r.m.s. voltage of the supply transformer,[3] which is of no importance because the grid current develops 900 volts. However this 900 volts might easily blow the supply filter condensers. The current is all grid current and all the voltage is developed by grid current, so the supply could be removed for all the good it is doing other than furnishing 300 volts at zero grid current. The grid voltage regulation is 600 × 100/300 = 200%, which is terrible.

If the required bias voltage is greater than the supply voltage, the method of Fig. 4 should be used. The additional voltage is developed across a series resistor and is not added across the supply to endanger the filter condensers. The behavior of this circuit will be seen to be like that of Fig. 2 except that the 112.5-volt drop across R_2 adds to the grid voltage.

The circuit of Fig. 5 shows typical conditions where the required bias voltage is less than the supply voltage. The bias voltage regulation is 40%, which is probably satisfactory for many types of operation.

SEVERAL TUBES ON ONE SUPPLY

A case where more than one grid is biased from the same supply is shown in Fig. 6. Note the way in which the currents add: The supply and No. 1 grid current add through R_1, this current in turn adds to No. 2 grid current through R_2, and this current in turn adds to No. 3 grid current through R_3. The voltages developed across R_1, R_2 and R_3 are in series and add up to a sum that is in parallel with the supply voltage. The voltage on No. 3 grid is the voltage developed across R_3 only. The voltage on No. 2 grid is the voltage developed across R_2 plus the voltage across R_3. The voltage on No. 1 grid is the voltage developed across R_1 plus the voltages on R_2 and R_3.

CONCLUSIONS

Now that we have an idea of bias-supply behavior, we need a simple rule to follow that will permit us to build a supply to fit our needs, whatever they may be. The final amplifier probably requires the best bias voltage regulation and usually takes the highest bias voltage. Therefore, the transformer selected for the supply should, when

(Continued on page 98)

[1] There is an instantaneous effect not considered here, in that the change in net bias voltage probably also would affect the amount of grid current flowing, so that an initial 45 ma. would drop slightly as the power-supply voltage rose. The final result, however, will not be affected so long as the grid current is maintained at a constant figure.—*Editor.*

[2] Regulation usually is expressed in terms of the load voltage, but use of the no-grid-current voltage as a base is more indicative in this case.—*Editor.*

[3] This rise in voltage occurs regardless of whether a choke —or condenser-input filter is used in the supply. The choke-input filter will give better regulation so long as the portion of the current furnished by the supply is greater than the critical value (see power supply chapter in the *Handbook*) but below that point the voltage will rise rapidly toward the peak output voltage of the rectifier.—*Editor.*

"MULTI-BAND" TRANSMITTERS

THORDARSON

100 WATT

Multi-Band Transmitter

USES

Genuine

AMPHENOL

REG. U.S. PAT. OFF.

THE WORLD'S STRONGEST SOCKET

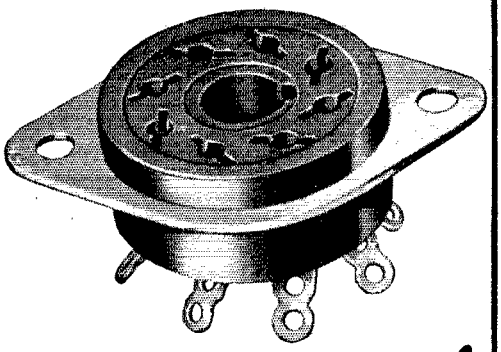

AND

For real DX Punch in any Transmitter

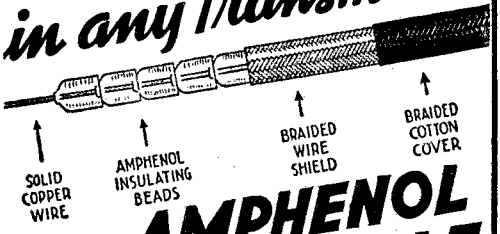

use AMPHENOL CO-AXIAL CABLE

NEW CATALOG READY

SEE YOUR PARTS DISTRIBUTOR

Send today for new Amphenol catalog or see your parts dealer. See us at Chicago Ham Show, Sept. 3-4-5, Sherman Hotel.

AMERICAN PHENOLIC CORPORATION

1250 W. VAN BUREN STREET, CHICAGO, U. S. A.

BY THORDARSON

Silent Keys

IT IS with deep regret that we record the passing of these amateurs:

Leslie Elmer Anderson, W9MKS, Granville, Ill.
Douglas A. Buchanan, VK2ABT, Yerrinbool, N.S.W., Aust.
A. D. Campbell, ex-VE3YZ, Ridgetown, Ont.
Eugene P. Chase, Jr., W2KAK, Teaneck, N. J.
Charles Clemmer, W8QUI, Detroit, Mich.
Norman L. Dahl, VK2ND, Wahroonga, N.S.W., Aust.
Harold Gies, W7DTO, Walla Walla, Wash.
John D. Hertz, W7BRC, Walla Walla, Wash.
Raymond Howell, ex-W6CID, Modesto, Calif.
Sgt. James C. Jones, W4SO, Elberton, Ga.
Harry A. Lince, W8LCL, Allegan, Mich.
Harold William Lotz, W6NXK, ex-W2BST, Los Angeles, Calif.
Charles E. Lounsbery, W9ZPC, Denver, Colo.
Karl D. Sidebottom, W9SYL, Lamar, Colo.

Grid-Bias Power Packs

(*Continued from page 32*)

fully loaded, deliver the required bias voltage on the final grid. The current that the transformer should be rated to deliver, and the resistance to use for the common bleeder-grid leak, depends on the total expected grid current.

A study of power supply voltage regulation in this connection shows that the worst regulation occurs when the supply is lightly loaded. Therefore we should never allow a bias supply to drop below a certain load, say 50 ma. Now if we expect to have a total of 50 ma. grid current, we add these values and divide the result into the supply voltage to get the required resistance. The sum of the currents also is the required transformer current rating.

As an example, suppose the supply is rated to deliver 250 volts at the required load of 50+50=100 ma. Then 250/0.1=2500 ohms, the bleeder resistance. Do not hesitate to load the supply up to its full rating, because the load drops during the time grid current is flowing. Use a 200-watt slider-tap resistor to make voltage adjustments easy.

An interesting thought arises in connection with the current drop in the bias supply. Why not make it duplex and supply the plate of an oscillator also, adjusting the resistance on the bias side until the drop in current exactly balances the rise in oscillator plate current? This should achieve perfect voltage regulation on the oscillator plate and on the grid of the tube being biased. The thought should be worth investigating.

Do's and Don'ts in Power Supplies

By T. M. Ferrill, Jr.,* W5CJB-1

SOME careless and mistaken practices often creep into power supply design; particularly in the selection and operation—or misoperation—of components, despite very clear and dependable information published in standard reference books. This incomplete understanding of all the factors involved frequently leads to disappointment and to unnecessary correspondence with manufacturers of transformers and chokes, especially in the case of the lower-priced units which carry ratings having little or no margin of safety. Probably this is more often true of cases in which inexperienced amateurs "graduate" to medium and high-power installations, but even more experienced amateurs—presumably better informed—also have trouble from time to time, trouble which easily could be avoided with a little forethought.

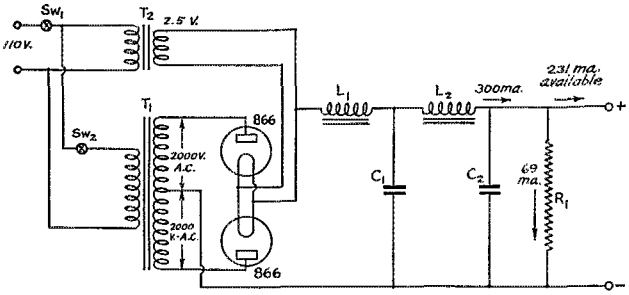

FIG. 1—THE POWER SUPPLY CIRCUIT UNDER DISCUSSION

The condensers C_1 and C_2 do not enter into the discussion, since in a circuit of this type they have little to do with average voltage regulation. They must have sufficient capacity, of course, to reduce the ripple content in the d.c. output voltage to a negligible value, and in 'phone transmitters C_2 must have negligible reactance at voice frequencies.

Let us take a representative case, with requirements worked out, to show just what properly could be expected from the component parts. A typical amateur has just completed a transmitter requiring 2000 volts at 300 ma., a 600-watt continuous load when used for 'phone. Accordingly, he thumbs through his latest catalog and finds, much to his satisfaction, that the catalog lists a transformer rated to supply 2000 volts a.c. at 300 mils, the voltage specified being for one-half secondary winding. In the same manner, he finds a swinging choke and a smoothing choke also rated at 300 mils, and blissfully proceeds to obtain this apparatus, thinking himself quite fortunate, indeed, to have found listed just the apparatus needed. However, there is more here than meets the eye of the careless designer, as he may later learn to his regret (or the manufacturer's regret, for it is often the sad experience of this much-mistreated person to receive a tearful letter insisting, ". . . and it was operated within your rating, so I feel that I am entitled to a new one").

In Fig. 1 is shown the power-supply circuit, just as it probably would be in this representative case. The components selected are as follows:

L_1—Swinging choke, rated at 5–25 henrys, 90 ohms d.c. resistance, 300 ma.

L_2—Smoothing choke, rated at 20 henrys, 100 ohms d.c. resistance, 300 ma.

T_1—Transformer, rated at 2000 volts a.c. each half of secondary winding at 300 ma. load.

The problem now is to determine the output voltage and power available without overloading any of the units.

Fig. 2 shows an approximate drawing of the rectified but unfiltered output voltage from the 2000-volt transformer under consideration. The rating of 2000 volts is given in "r.m.s." voltage, a figure which corresponds to the voltage of a direct current source which would develop the same power, or heating effect, in the resistor connected to the rectifier output. When the rectifier output is applied to a choke-input filter, however, the resulting d.c. output voltage is approximately the *average* value of the a.c. voltage. The average voltage output of the transformer-rectifier combination is represented by the 1800-volt line shown on the graph, and it is this latter value which would be given by a d.c. voltmeter connected across the output of the system. The ratio of average to r.m.s. voltage is 0.9, and this value is used in the computation below:

$$2000 \times 0.9 = 1800 \text{ volts} = \text{d.c. output voltage}$$

A further drop in voltage will occur because of the resistance of the choke windings. This drop readily can be computed by Ohm's Law:

$$I\,(R_{L1}+R_{L2}) = 0.300\,(90+100) = 57 \text{ volts}$$

In addition there is a constant drop of approximately 15 volts in the mercury-vapor rectifiers, so that the net output voltage becomes: $1800-15-57=1730$ volts, approximately.

The resistance of the bleeder, R_1, is now computed from the 25-henry critical value of the in-

*Technical Department.

put choke, by use of the formula,[1] $L_{input} = \frac{R_1}{1000}$

$R_1 = 25 \times 1000 = 25{,}000$ ohms

Bleeder current $= \frac{E}{R_1} = \frac{1730}{25{,}000} = 0.069$, or 69 ma.

Bleeder power $= 0.069 \times 1730 = 119.2$ watts (120)

The bleeder power rating should be at least this value, and higher if the resistor is mounted near other components.

The 69-ma. current taken by the bleeder obviously must come out of the 300-ma. transformer and choke ratings, so that the results can be summed up as follows:

Net output current = 300 − 69, or 231 ma.
Net output voltage = 1730 volts
Net output power = 0.231 × 1730 = 400 watts approximately

In other words, the power supply is quite suitable for supplying a load requiring 400 watts under the conditions (1730 volts at 231 mils) which result from computations above. However, it should not be expected to deliver 600 watts, as might have been anticipated in the selection of the component parts. As a matter of fact, use of this power supply at a 600-watt load would mean that the ratings of not only the power transformer were exceeded, but also those of the two chokes, since the total current would be well over 400 ma. The 400-watt external load produced by use of a 230-ma. current would cause the transformer and the chokes to operate at just their rated power—no more or less.

In view of the result obtained by the "snap judgment" method of selecting power supply components, it would seem advisable to start with the desired load and work back to the required transformer and choke ratings. The method is simply the reverse of that just used, and we shall carry it through to determine the ratings of the power supply transformer, chokes, and bleeder to meet the 2000-volt 300-ma. requirement originally set up.

Since it is obvious from the foregoing that the current supplied to the bleeder is going to add some figure between 50 and 100 ma. to the 300-ma. load requirement, chokes with 400-ma. or greater current rating will first be selected, so that the representative ratings below may be obtained:

L_1—Swinging choke, rated at 5–25 henrys, 75 ohms d.c. resistance, 400 ma.
L_2—Smoothing choke, rated at 20 henrys, 75 ohms d.c. resistance, 400 ma.

Computations based on the 25-henry critical value of inductance for the new swinging choke again result in the selection of a 25,000-ohm bleeder resistance.

[1] Power Supply Chapter, *The Radio Amateur's Handbook* (Page 332, 1938 Edition.)

Bleeder current $= \frac{2000}{25{,}000} = 0.080$, or 80 ma.

The current rating for the transformer and chokes should, therefore, be at least 300 + 80, or 380 ma. Choke voltage drop is then computed by the method used previously—I $(R_{L_1} + R_{L_2} = 0.380$ $(75 + 75) = 57$ volts. Adding the choke and rectifier drops to the desired voltage, 2000 + 57 + 15 = 2072 volts = average gross voltage required (not to be confused with any of the values published

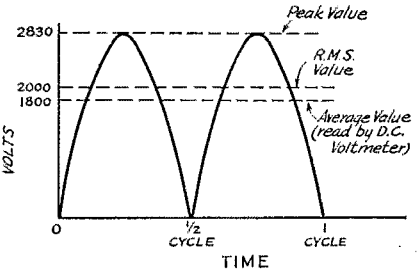

FIG. 2—WAVE-FORM OF FULL-WAVE RECTIFIED OUTPUT VOLTAGE SHOWING THE RELATIONSHIP BETWEEN R.M.S., PEAK AND AVERAGE VALUES OF THE OUTPUT VOLTAGE

on transformers as their a.c. output voltage, which is an r.m.s. value).

Changing the average to an r.m.s. value, $\frac{2073}{0.9}$

= 2300 volts = a.c. rating, center-tap to one rectifier plate, on transformer loaded to 380-ma. d.c. Hence, the following parts are suitable for the power supply for the 600-watt load:

L_1—Swinging choke, rated at 5–25 henrys, 75 ohms d.c. resistance, 400 ma.
L_2—Smoothing choke, rated at 20 henrys, 75 ohms d.c. resistance, 400 ma.
T_1—Transformer, rated at 2300–0–2300 volts, a.c., at 380 ma. d.c. (current rating should be 380 ma. or more).
R_1—25,000 ohms, power rating at least 0.080 × 2000, or 160 watts.

It is interesting to note that in the first case the power supply using a "600-watt" transformer at full rating delivered a net power of 400 watts, whereas a power supply for delivering 600 watts net power would, in the case discussed, require an "875-watt" transformer (the product of 2300 volts and 380 ma.). Actually, the first transformer output *power* rating is 540 watts, given by 0.300 × 2000 × 0.9. Similarly, the total power delivered by the second transformer is 0.380 × 2300 × 0.9, or 785 watts.

Finally, it may well be mentioned that the methods of calculation described do not take into account all losses, peculiar wave-shapes, or phase-

(Continued on page 94)

FOR HI-FREQ. HEAVI-DUTY

TYPE 86



MICA TRANSMITTING CAPACITORS

FOR THE AMATEUR

Your money can't buy you this much in any other capacitor!

★ Patented series mica stack: eliminates corona losses
★ Soldered foils: afford high current rating
★ India ruby mica dielectric: low power factor, high "Q"
★ Vacuum impregnated assembly: high insulation, no air voids
★ Special low loss filler: reduces stray losses
★ Insulated clamp holder: no internal voltage arc-over
★ Black glazed porcelain dehydrated case: low r. f. losses

Write today for new C-D catalog No. 161

1013 Hamilton Blvd. So. Plainfield, N. J.

Cable Address: CORDU

PRODUCT OF THE WORLD'S OLDEST AND LARGEST EXCLUSIVE MANUFACTURER OF CAPACITORS

CORNELL-DUBILIER

ELECTRIC CORPORATION

South Plainfield, New Jersey

Your Rig is Right with OHMITE Resistance Units

With Ohmite Rheostats controlling filament voltages, you can be sure you're getting maximum tube life and top efficiency. Sizes for all transmitting tubes. Ask your jobber about these and other Ohmite products especially designed for amateur radio transmitters and receivers.

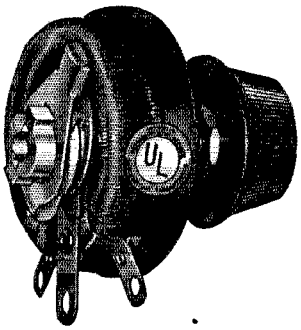

Write for Free Copy of New Catalog 17

OHMITE MANUFACTURING COMPANY

4831 West Flournoy Street, Chicago, U.S.A.

OHMITE

RHEOSTATS RESISTORS TAP SWITCHES

plishments during those hectic four days when it seemed that the whole world had collapsed and entire oceans dumped in their laps.

Entirely absent was the hysteria on the air that usually follows in the wake of such a catastrophe. A.R.R.L. Emergency Coördinators W6CAH, W6CMN, W6EAH, W6KLN, and W6MQM were working full time in placing stations, establishing networks and routing traffic. Their efforts and the organization work that had already been done proved the value of the A.R.R.L. Emergency Corps beyond any question of a doubt during one of the most severe tests imaginable. The few weak spots evidenced create the objective of working toward a perfect emergency communication organization, smoothly running and effective to the utmost. The lessons learned were not in vain.

Do's and Don'ts in Power Supplies

(Continued from page 41)

angles and accompanying volt-ampere ratings of transformers, nor were the equations solved with a great degree of accuracy. In practice, however, these simple calculations lead to quite adequate results in determining correct ratings of components.

Methods of solution similar to the second one given here will be found outlined in slightly different form in *The Radio Amateur's Handbook*.

An Improved Capacity Bridge

(Continued from page 43)

The calibration worries you now? Think nothing of it. Get yourself a piece of graph paper and make a curve as in Fig. 2. For those who want to spread it out on a larger paper with lots of squares, a table of average values is given for the particular straight-line capacity condenser used in this bridge. Note that in drawing the curve the points are plotted as though the condenser capacity increased with increasing dial settings, although actually zero represents full capacity of the condenser. This is done simply for the sake of convenience, so that increasing dial readings will indicate a larger unknown capacity.

In operating the bridge the "displacement," or as it is more commonly known, the "substitution" method is used. With the bridge balanced as described with the unknown capacitor connected to the short leads to the "X" or "unknown" binding posts, the dial setting is noted and referred to the calibration chart. For example, null may have been found at 60 degrees, corresponding to 900 $\mu\mu$fd. on the chart. No, not so fast, that's not the unknown capacity. You must subtract from that value the capacity at 10 on the dial, where the bridge was balanced before the unknown capacitor was connected to the "X" posts. This value, 150 $\mu\mu$fd., from 900 $\mu\mu$fd. leaves 750 $\mu\mu$fd., which is the capacity of the unknown. The advantage of this method is that the calibration of the "standard" need not be absolute so long as the readings taken are on the linear or straight line portion of the curve, 10 to

A VOLTAGE-REGULATED

A good, dependable power supply unit is one of the handiest units to have around the shack. You can hook up experimental setups with the knowledge that, if they don't work out, it isn't the fault of the power supply.

IT IS OFTEN desirable and sometimes necessary to have available a source of dirrect-current power which is independent of the input voltage or the output load. By the use of electronic voltage regulators, voltages of almost any value can be obtained with excellent stability. It is not difficult to supply 300 volts, constant to within 1 volt for line or load changes of 25%.

There are several additinal features of an electronically regulated power supply. A regulator that eliminates sporadic changes in voltage will eliminate the ripple voltage and also reduce the internal impedence of the power supply. This latter quality is especially desirable in power fed to amplifiers having an extremely low frequency response, and when regeneration due to common B-supply impedance would be desirable. A well-regulated power supply is desirable for circuits in which pulsating direct current would effect frequency or stability.

It is advisable to review a few voltage stabilizing circuits and devices before describing the all-purpose voltage regulated supply.

Gas Regulators

For small voltages and currents, glow tubes may be used. The glow tube, or gas tube, has, in its simplest form, two electrodes between which a self-maintained gas discharge takes place. The nature of the discharge through the gas in the tube is such that when the voltage across the electrodes tries to increase, more current passes through but the voltage drop across the tube does not change.

The simplest type of voltage-stabilizer circuit consists of a glow-discharge tube and a resistance as shown in *Fig. 1.* An increase of input voltage results in an increased IR drop through the series resistance due to increased current through the tube. The drop across the tube increases only slightly. An increase in current through the load results in an almost equal reduction of tube current at nearly constant tube drop voltage. Gas tubes VR-75, VR-105 and VR-150 are gas-filled cold cathode voltage regulators.

The voltage stabilizing feature of a gas tube is only true over a limited range of potentials for any one tube, so that various tubes must be used for stabilizing different voltages. For example, the VR-105/30 tube regulates potentials in the neighborhood of 105 volts. The number 30 refers to the maximum current in milliamperes which can be passed through the tube without damaging it. The maximum load current is 25 milliamperes.

If the series resistor R is as small as 3000 ohms, the voltage control of the

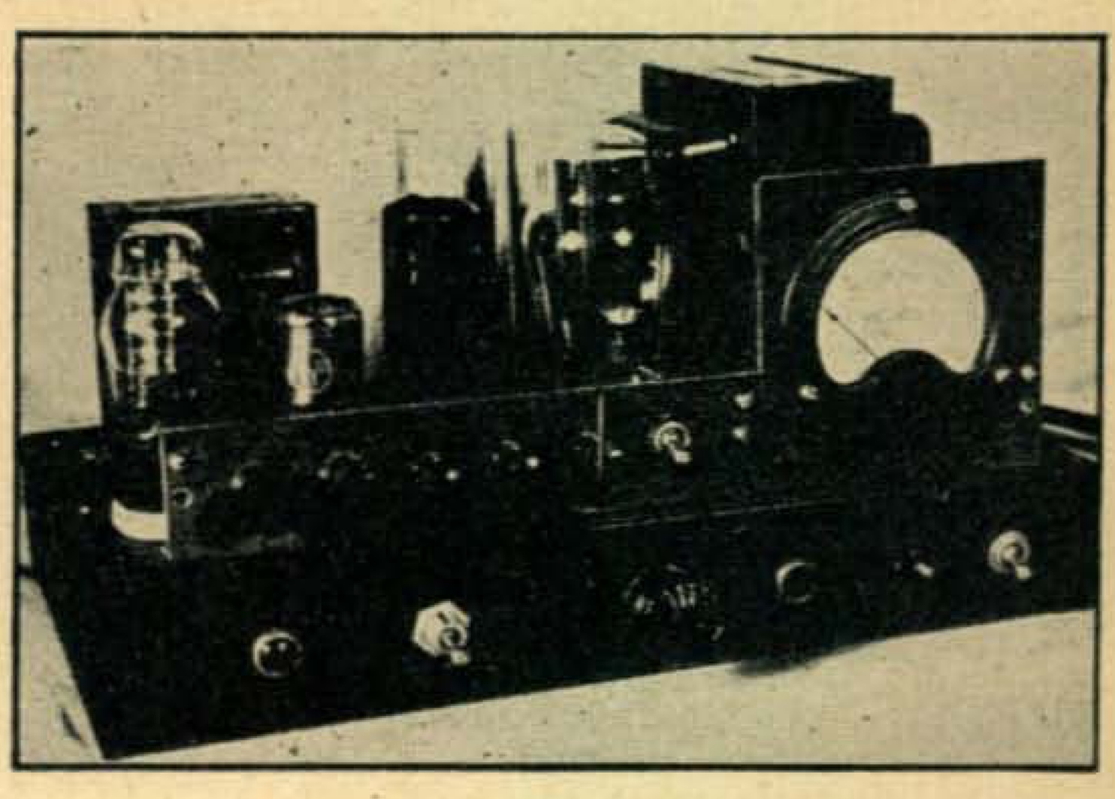

Front View of Power Supply

POWER SUPPLY

WILLIAM DONAWA

VR-105 will be limited. If R is 20,000 ohms or more, the control range around 105 volts will be much greater. The control feature is lost if the current through the tube falls below 5 milliamperes. The size of the series resistor should always be such so as never to allow an operating current of more than 30 ma. to flow through the tube in case the load is disconnected. A starting voltage somewhat higher than the operating voltage is required to initiate the discharge. This generally occurs automatically, as the heater-type tubes in the circuit connected to the power supply draw no current during the warm-up period and the voltage available will be high enough.

Two or more glow-tubes may be connected in series to handle higher voltages; taps may be taken off between the glow-tubes to obtain lower voltages. This circuit is illustrated in *Fig. 2.*

Vacuum Tube Regulators

Vacuum tubes may be employed to obtain stabilized voltages. The circuits generally fall into one of the four following types:

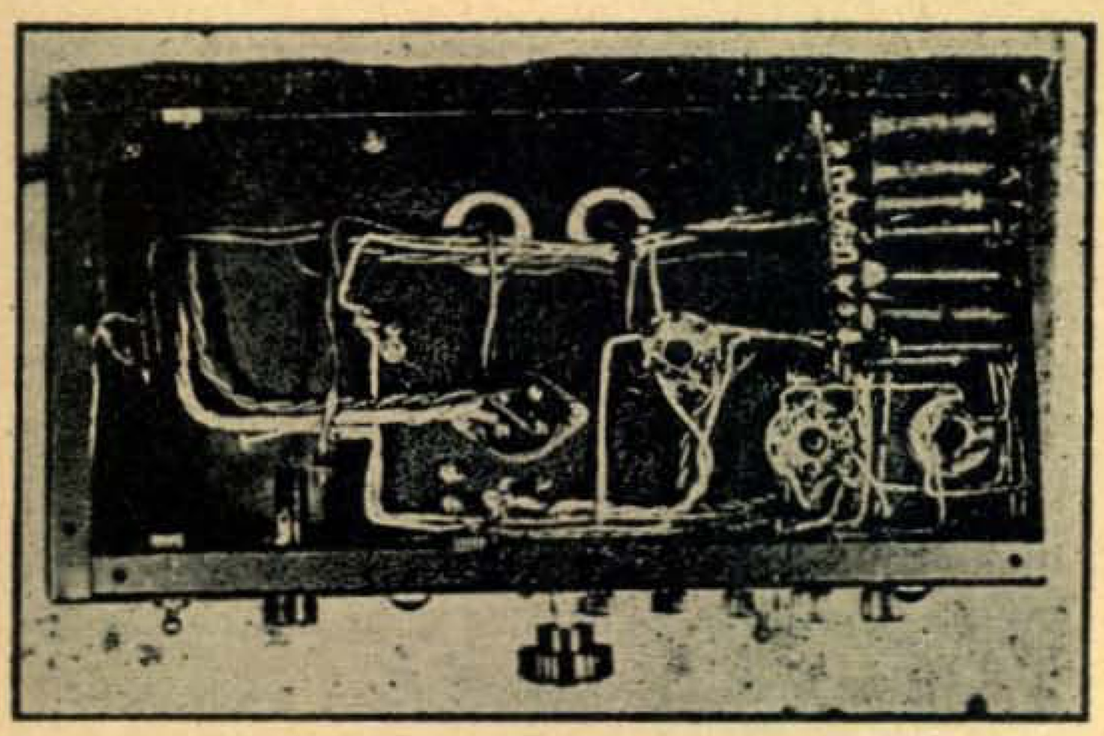

Under-chassis view of power supply

a. The single stage degenerative d-c amplifier type *(Fig. 3).*

b. The design derived from the bridge circuit for measuring the variational transconductance of tubes *(Fig. 4).*

c. The bridge circuit type that depends upon the variational amplification factor of a vacuum tube *(Fig. 5)*,

d. A combination composed of one of the three basic circuits mentioned above with one or more stages of amplification.

The circuit to be described herein is a variation of the degenerative regulator circuit and is illustrated in *(Fig. 6)*. Regulation curves are shown in *Fig. 7.*

Analysis of Action

The voltage applied to the regulating circuit is the voltage delivered by the ordinary power supply. Tube V_1 acts as a series resistor controlling the amount of current delivered to the load, and therefore, controls the voltage Ea. Tube V_2 amplifies the voltage applied to its grid by the voltage dividing network R_4, R_5, R_6 and R_7. Any change in the ouput voltage is amplified by V_2 and impressed on the grid of V_1 which either decreases or increases the current flowing through it. A detailed analysis of the action follows:

a. An increase in Ea will produce a corresponding increase in Eg which will be applied to the grid of V_2.

b. An increase in Eg will cause the grid of V_2 to become more positive.

c. If the grid of V_2 becomes more positive, the plate current will increase.

d. An increase in current through V_2 will increase the voltage drop across R_1, driving the grid of V_1 more negative.

e. When the grid of V_1 becomes more negative, the load current passing through

it decreases, and Ea falls to its original value. Should the voltage Ea decrease, the opposite will occur.

The desire, therefore, is to amplify as much as possible the voltage fluctuations that appear across the output terminals of the power unit, and to impress these amplified fluctuations on the grid of the series resistor tube.

There are several items included in the circuit in order to obtain smoother and more complete stabilization of the load voltages. If a gaseous rectifier is used a low capacity, C_5 should be placed in the circuit to prevent "hash." Resistor R_2, V_3, and the voltage dividing network form the bleeder circuit which draws suffiicient current to permit operation somewhere in the "flat" portion of the rectifier output characteristic.

The resistance of R_2 should be of such a value as to insure a current of least 5 ma. through the R-105 when the potentiometer, R_6, is adjusted for minimum voltage, Ea, across the output terminals. For small changes in Ea, relatively large changes in V_2 plate current are in order. This means that we want to cause wide swings in the current through the VR-105. It is desirable therefore to operate the VR-105 with a low d-c ignition current so that a large current change is possible before saturation is reached.

Eliminating Ripple

Any variation in Ea due to ripple voltage is applied to the grid of V_2 by C_1. The reactance of C_1 is low and the a-c voltage applied to the grid of V_2 has the same effect as the d. c. variations applied to it through the voltage dividing network. The addition of the condenser results in the elimination of about 90% of any ripple voltage existing after the regular filter circuit.

The cathode of the amplifier pentode V_2 is maintained at a constant potential above the negative side of the line by the gas tube V_3, a properly aged neon lamp, or by battery. Under certain conditions oscillations may be started by the regulator tube. This may be prevented by condenser C_2.

Grid bias on the amplifier tube is obtained from the combination voltage divider and bleeder network across the output terminals. Screen grid voltage must always be higher than the control grid

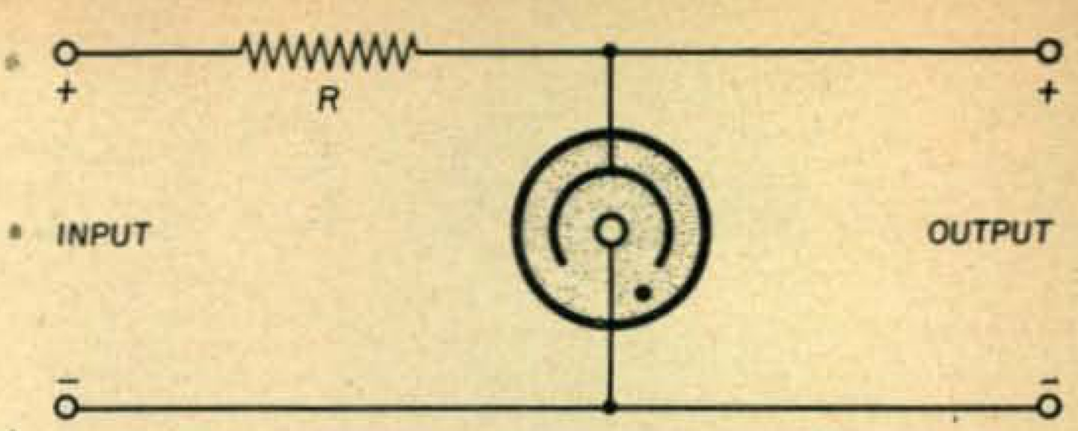

Fig. 1. Fundamental regulator tube circuit

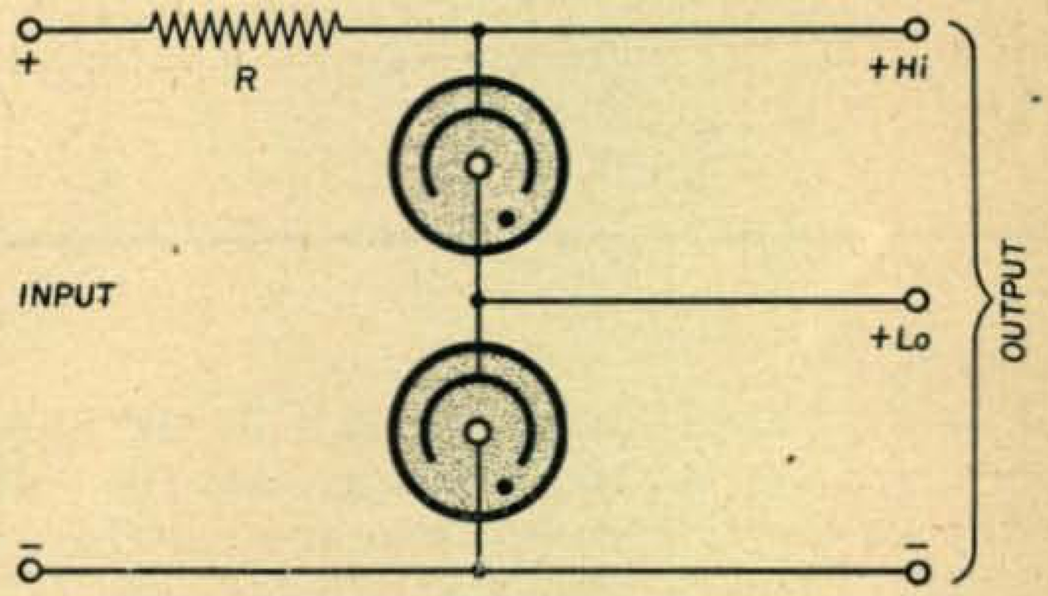

Fig. 2. Circuit with two tubes in series

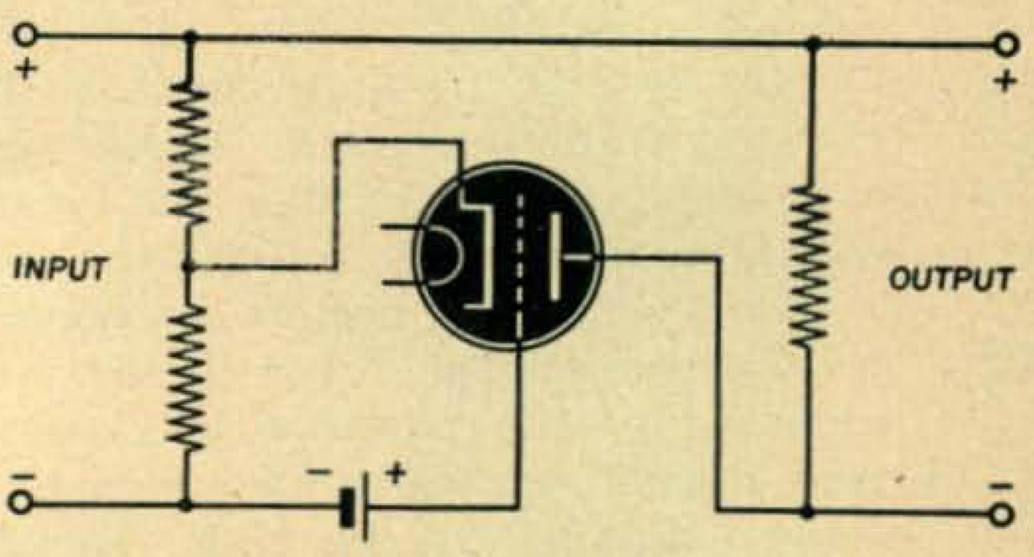

Fig. 3. Single-stage degenerative circuit

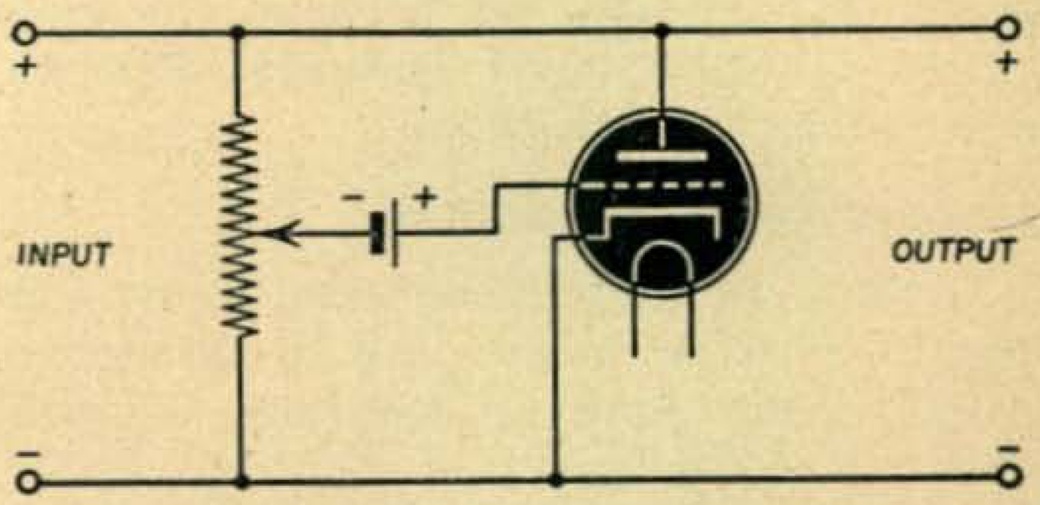

Fig. 4. Regulation is secured by using a circuit derived from tube bridge for Gm measurements

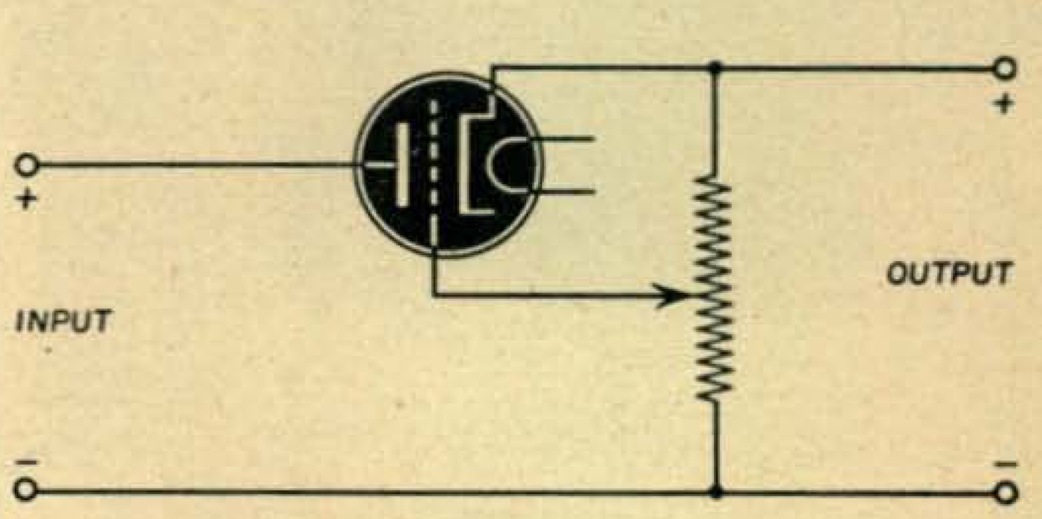

Fig. 5. It is likewise possible to obtain regulation by employing a tube bridge circuit used for measuring amplification factor

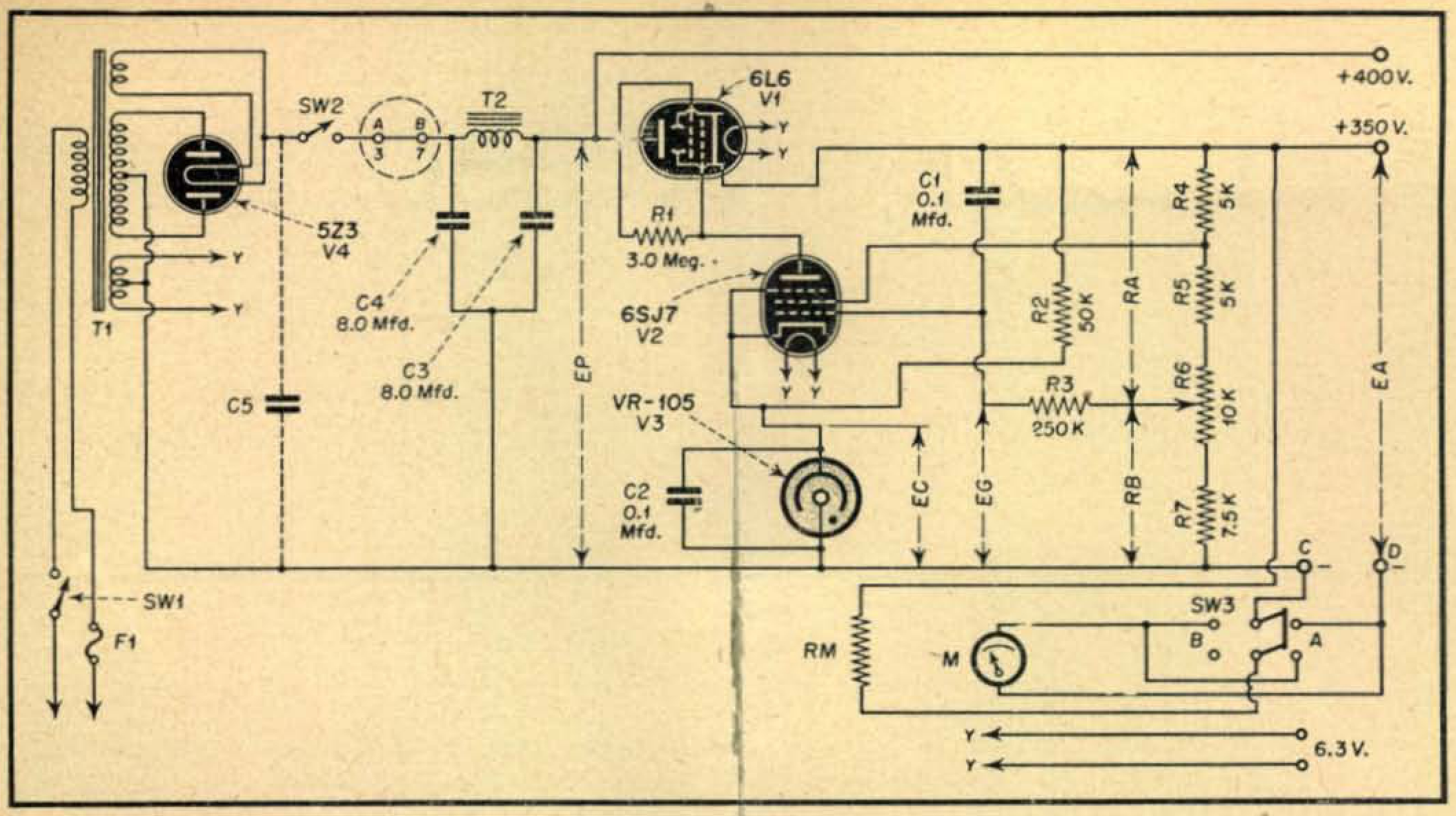

Fig. 6. Schematic of regulated power supply

voltage and is, therefore, obtained higher up on the voltage divider.

The exact amount of change in Ea that is applied to the grid of V_2 depends upon the ratio Ra to Ra+Rb. If this ratio is very small, poor regulation will result.

The potential about which the voltage will stabilize is determined by the value of Eg and the resistance circuit Ra and Rb. Since it is an advantage to be able to vary this potential, Ra and Rb are broken up into three fixed resistors and a potentiometer.

The value of Eg can be determined by making it a few volts less than the cut-off voltage for V_2. Eg is subtracted from Ec as the bias on V_2, because of V_3, is very high.

The following equations are used in computing the values of R_4, R_5, R_6, and R_7 for a particular range of voltage in which the regulating circuit is to operate.

$$Rb = \frac{R6}{(Ea\ max/Ea\ min)-1}$$

$$Ra = Rb\ [(Ea\ max/Eg)-1]-R6$$

Ra is then divided into two resistances in the following manner. Compute the value of the current flowing through the entire voltage dividing network. Calculate the resistance, with that value of current flowing through it which will produce the correct value of screen voltage must be at least 20 volts greater than the maximum bias voltage to be applied to the control grid by means of R_6. Subtract R_6 and R_7 from the resistance value obtained which

[*Continued on page 38*]

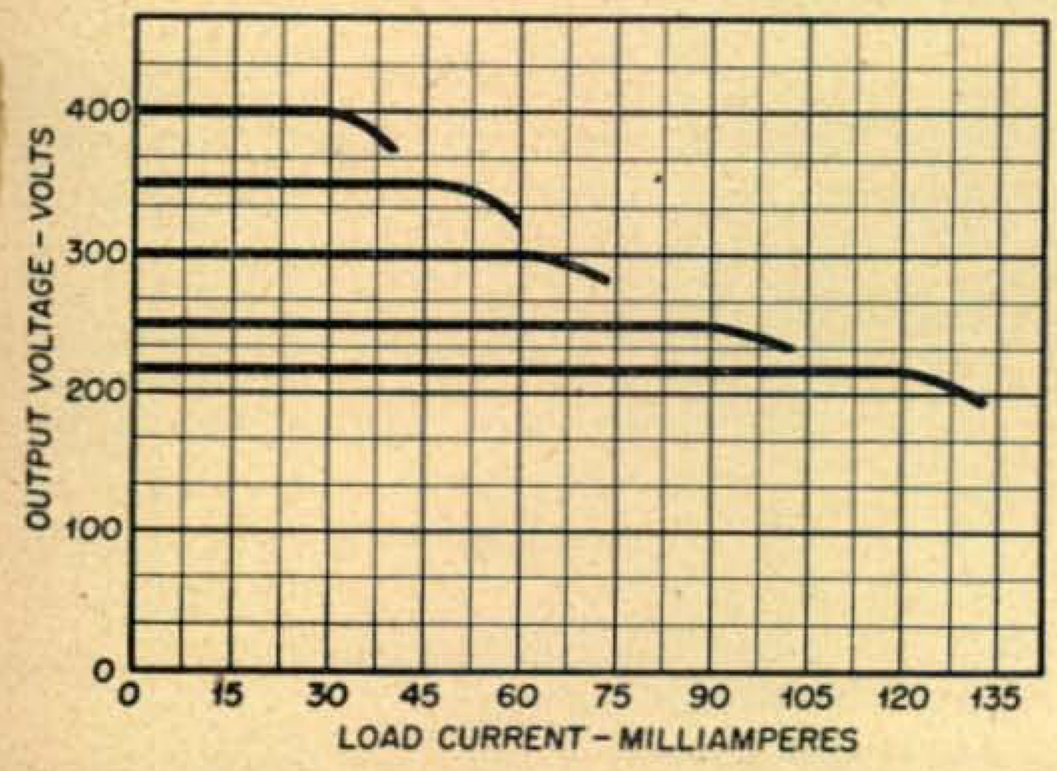

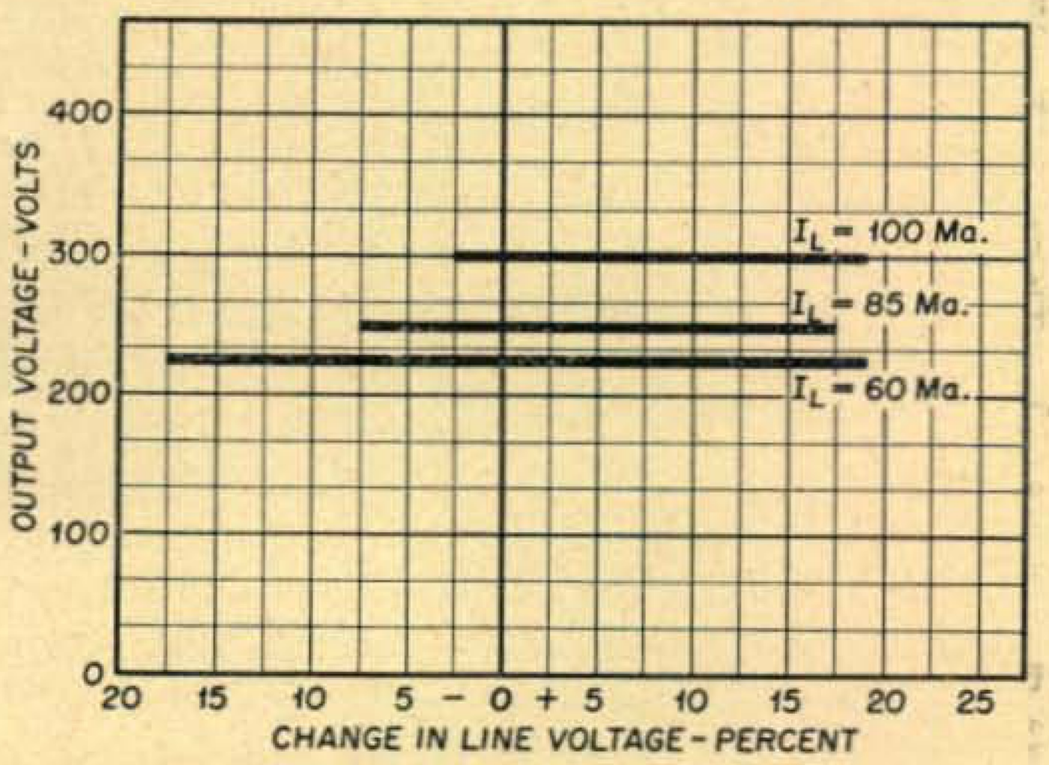

Fig. 7. Variation of output voltage with load (left) and (right) effect of line voltage changes on output

ONE CENTRAL SOURCE FOR
Radio Communications Parts & Equipment

Allied carries the largest and most complete stocks of parts and equipment under one roof, ready for quick shipment . . . for production, radio training, research and maintenance.



★

As soon as available for civilian use, Allied becomes a central source for Hallicrafters, National, Hammarlund, and other well-known communication receivers. These receivers are now available on proper priority.

BUYING GUIDE
Available on request. Write for it.

Everything in Radio and Electronics
ALLIED RADIO
CORPORATION
833 W. Jackson Blvd., Dept. 56-A-5, Chicago 7, Ill.

METERS

We have them — for immediate delivery — no priorities!

Vital meters — Priorities required — are also available.

Write for prices.

HATRY AND YOUNG
HARTFORD CONNECTICUT

To All Amateurs!

★ We are proud of the splendid showing our amateur friends and old customers are making today. We will be ready to serve you again as soon as you are through with your job and we are through taking care of military requirements. May we have a happy reunion soon.

SEATTLE RADIO SUPPLY, INC.
2117 Second Avenue Seattle 1, Wash.
Phone: Seneca 2345

POWER SUPPLY

[*Continued from page 21*]

will give R_s. Subtracting R_s from Ra provides the resistance of R_t.

The theoretical minimum output voltage Ea is limited by the value of the bias on the amplifier tube, obtained by the drop across the gas tube. The grid voltage required to neutralize the voltage in this particular case must be at least 105 volts. If the grid voltage was tapped directly from the plus terminal, this voltage available at that point would have to be greater than 105 volts.

By shunting the gas tube with a voltage dividing network as in Fig. 8, and obtaining the cathode bias voltage from a potentiometer, the minimum output voltage can be made to approach zero.

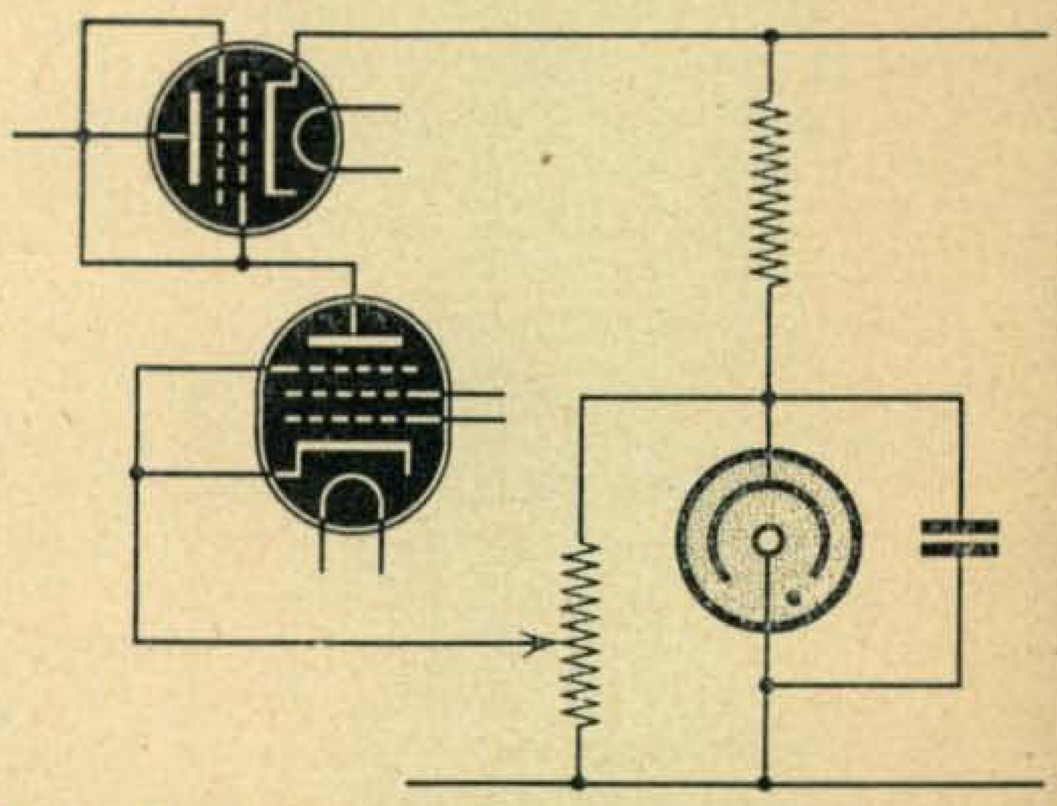

Fig. 8. By reducing the cathode bias of the pentode to zero, a very low output voltage can be obtained

In order to obtain good regulation over a wide range of voltages, the ratio of Ra and Rb can be changed by means of a selector switch, or any combination of this resistance circuit, there are definite maximum and minimum output voltages which can be obtained with some degree of regulation.

If a milliammeter is available, the addition of switch SW-3 and the proper multiplier Rm will permit the use of the meter to measure output voltage in switch position *A* and load current in switch position B. The value of the multiplier resistor Rm must be determined for the particular meter that is used.

The jumper A-B in the positive lead from the rectifier is contained in the base of the gas tube between pins 3 and 7. If the gas

tube should be removed accidentally no bias would be applied to the grid of the series tube V_1 and possible damage to the load may result because of the increase in current V_1.

The following comments concern possible faulty operation of the regulator circuit.

1. *Excessive Hum:*
   a. Operation beyond the limit of the power supply.
   b. Line voltage less than 100 or more than 130.
   c. Defective tubes.
   d. Open filter condensers.
2. *Low voltage.*
   a. Defective rectifier.
   b. Defective series regulator tube.
3. *High Voltage:*
   a. Defective VR-05 or V_2.
   b. Defective resistors in the regulating circuit.
4. *Poor Regulation:*
   a. Operation beyond the limits of the unit.
   b. Change in the operation point of the tubes.
   c. Excessive line or load fluctations.

Hallicrafters Ham Shack

The Hallicrafters Company, Chicago, producers of the SCR-299, mobile radio communications unit, and other high frequency radio war equipment, saluted the wartime achievements of the nation's amateur radio operators with the official opening on Oct. 16 of a radio ham "shack" at 643 North Michigan Avenue, Chicago.

The "shack," fully equipped from the company's stock, was dedicated to the more than 25,000 radio hams in the military services. A service flag, commemorating the hams' military service, was presented by Chet Horton, member of the Hamfesters Radio Club of the Chicago area, to the American Radio Relay League, national organization of radio amateurs. Carol K. Witte, acting communications manager of the A. R. R. L., accepted the service flag for the League. More than 50 members of the Hamfesters Club were present at the ceremony.

The "ham shack on the boulevard" features, besides an exhibit of Hallicrafters electronic equipment, two detailed scale models as window displays. One shows a Pacific battle area and the other a small town and rural scene typical of what the nation is fighting to preserve.

Prepare to get your "ticket" with

DREW'S HOW TO PASS RADIO LICENSE EXAMINATIONS

By CHARLES E. DREW, I.R.E., A.I.E.E.



FOR
Amateur Radio Operators, Radiotelephone and Telegraph Operators

COVERS
Broadcasting — Marine — Aeronautical or any field of Radio Transmission and Reception

If you are an amateur and want to win your "ticket" this is the book for you. It will help you pass your radio license examinations.

Now brought up to date, for you who want to win your mark in the radio profession, this edition covers every type of radio activity whether it is marine, aeronautical, police or amateur broadcasting.

Presented in easy-to-follow question and answer form, Drew's HOW TO PASS is the "bible" of radio operators, radiotelephone and telegraph men. Take the sure way to knowledge and equip yourself with this book. Send for your copy today.

CONTENTS

Basic Radio Laws. Basic Theory and Practice. Radiotelephone. Advanced Radiotelephone. Radiotelegraph — Advanced Radiotelegraphy.

Second Edition, 320 Pages $3.00

ON APPROVAL COUPON

JOHN WILEY & SONS, Inc.
440 Fourth Ave., New York 16, N. Y.

Please send me a copy of Drew's HOW TO PASS on ten days' approval. At the end of that time, if I decide to keep the book, I will remit $3.00 plus postage; otherwise I will return the book postpaid.

Name .....
Address .....
City and State .....
Employed by .....

CQ-1-45

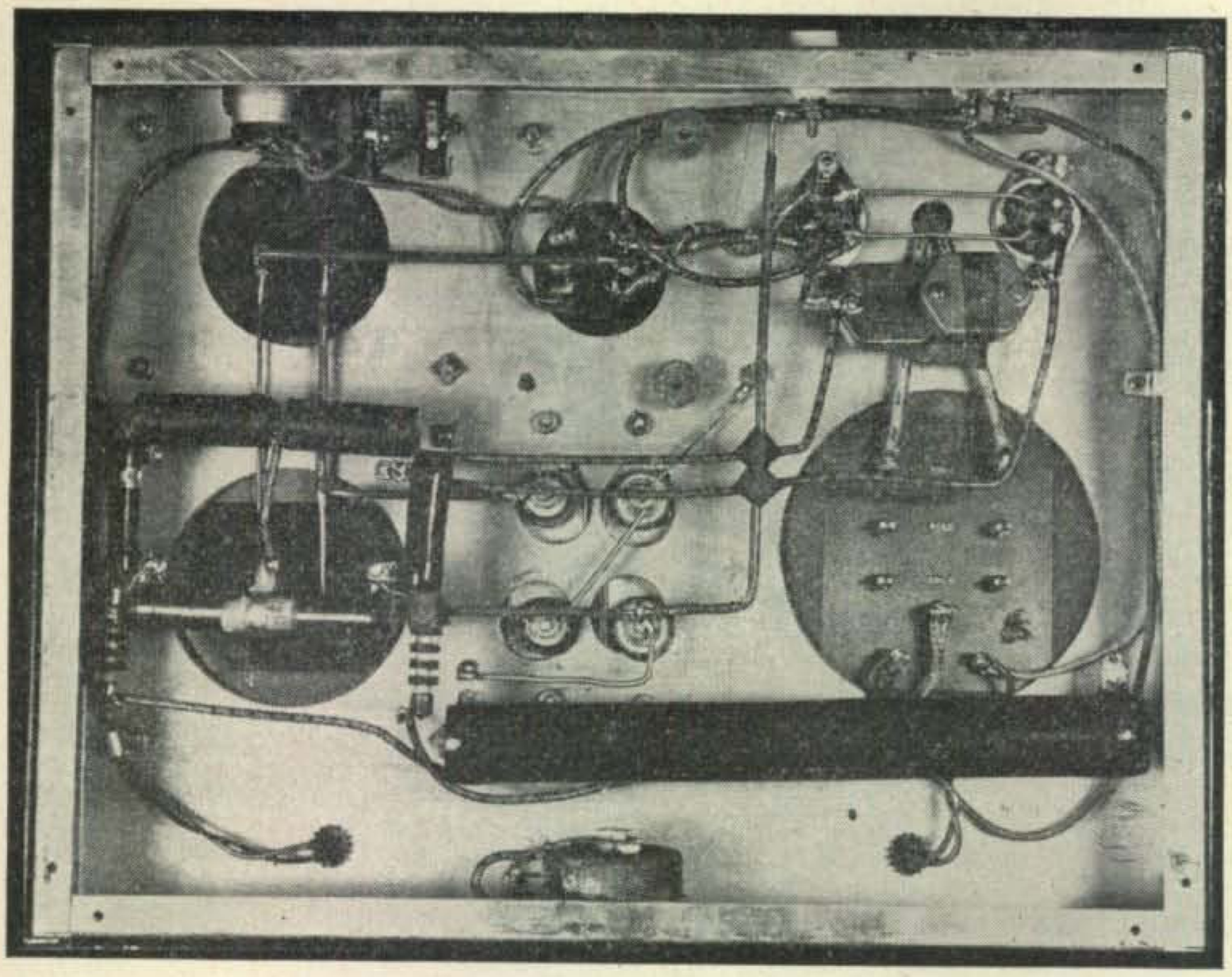

The phase shifting network is clearly shown on the right hand side of chassis. Remainder of supply is similar to standard medium voltage unit

Variable Output

GRID CONTROLLED HV SUPPLY

EDWARD J. OBERLE, W2LCA

Thyratron controlled rectifiers in a novel application provide a smoothly adjustable d-c voltage from zero to maximum supply output

WHILE GRID-CONTROLLED power supplies are not new they are still unusual in ham transmitter design. We had for some time planned a unit that would fit into the station as an all around universal power supply. It had to do a man-size job as the final amplifier plate supply, in addition to taking care of a variety of testing and experimental jobs, such as checking transmitting tubes, and supplying an easily controlled (manually) d-c voltage from 200 to 1500 volts. Financial considerations demanded economical design, although 15 or 20% above the cost of a fixed supply was considered bearable (roughly 10 or 20 dollars).

By making a few simple additions to the standard plate supply it can be converted to a grid-controlled rectifier unit which will supply a smoothly adjustable d-c voltage from zero to maximum. Although most of us have paid little attention to the FCC requirement of minimum interference for maximum transfer of intelligence, this power supply will provide a practical means of quickly and simply adjusting input power to the final stage of the transmitter.

There are several possible methods of controlling the output voltage and current of a power

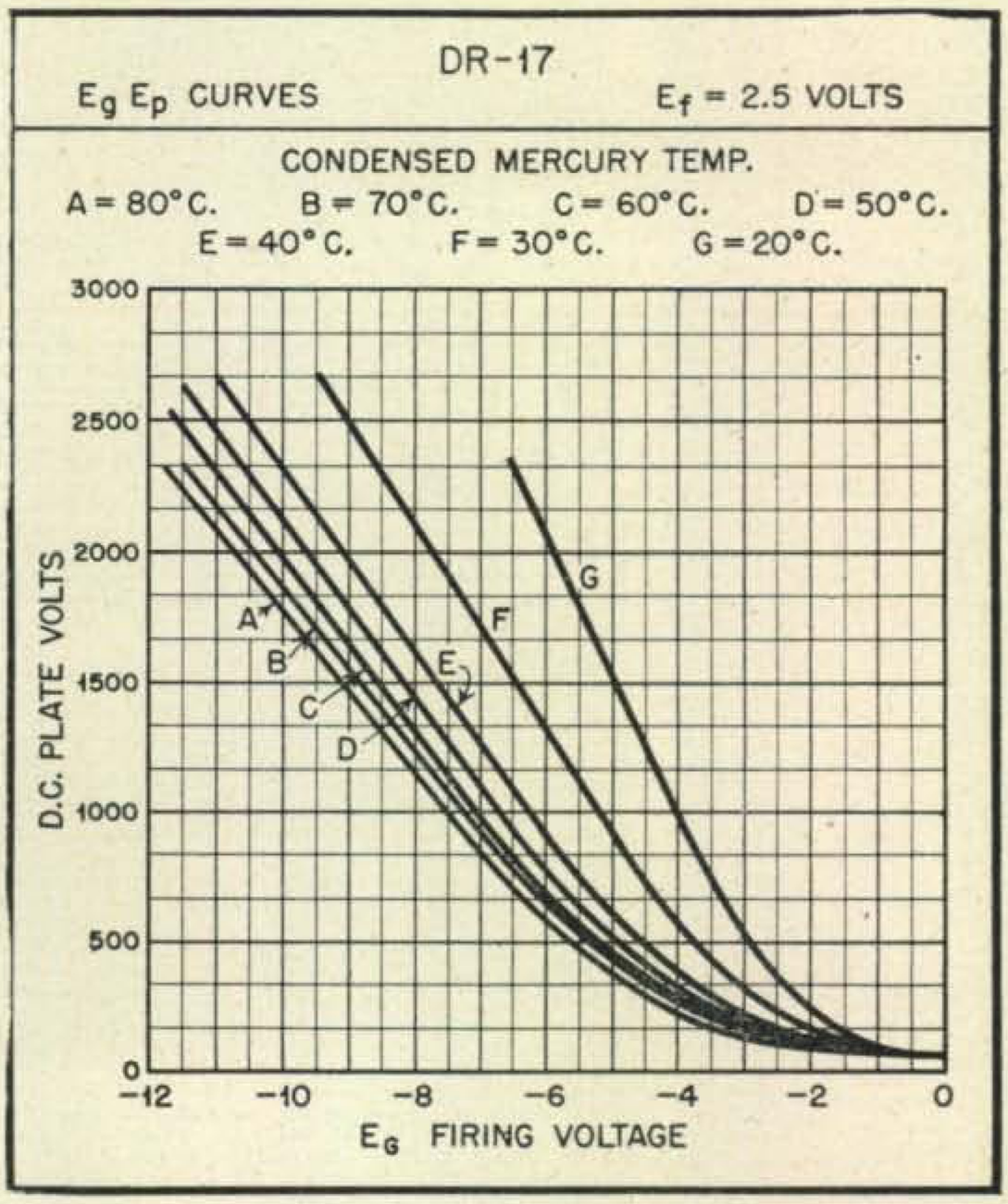

Bias voltage requirements under varying conditions for DR-17 grid controlled rectifier

supply. The system discussed here has proven to be very satisfactory in actual practice. In the practical application of the system to any particular transmitter there may be minor variations in details but the basic circuit should be retained.

The unit described is used to supply plate voltage for a 10-meter transmitter, running about 350 watts input normally. A pair of General Electronics DR17 thyratrons are used in the conventional two-tube full-wave circuit, with the addition of a phase-shifting network. The filter circuit is the usual choke input combination. Diode characteristics of the DR17 are similar to the 866A. The phase-shifting network outlined in the diagram (*Fig. 1*) is composed of *R1*, 2, 3, 4, 5, *C1*, *C2*, and the thyratron transformer, *T2*.

Design Considerations

The thyratron transformer (T2) must have insulation that is capable of withstanding the peak a-c voltage of the supply, if the case is to be grounded. A considerable saving in cost is effected by leaving the transformer case float (insulated from chassis) and using a cheaper filament transformer, as a thyratron transformer. The primary (110 volt) winding is connected to the grids of the thyratrons through the 1000-ohm grid resistors (R1, R2) and the secondary winding (5 volt) is wired back to the rectifier filament secondary winding. Therefore we are using the 5-volt filament transformer (thyratron transformer) as a step-up transformer.

The impedance ratio of this transformer (primary to secondary) is not critical but should be kept near the recommended combination. Because of the high sensitivity of the control grid of these tubes, it is essential to shield the grid from the effects of external fields. Therefore, it is advisable to install grid-to-cathode bypass condensers (*C5* and *C6*) at the tube sockets. For a few applications it has been found satisfactory to eliminate these condensers. The phase shifting network controls grid excitation because ionization of the thyratrons is started by a positive plate potential and is stopped when the plate voltage is reduced below the ionization potential of 15 or 20 volts. In other words, the grid has no control over the plate current after the mercury vapor has ionized and it is necessary to reduce plate voltage below the ionization potential before it can again take control. In alternating current circuits this occurs every cycle and the grid may gain control during the half cycle when the anode is negative with respect to the grid, and conversely if the grid is made sufficiently negative we can stop the flow of plate current during subsequent cycles. By applying grid voltage early or late in the cycle (*Fig. 2*) high or low output

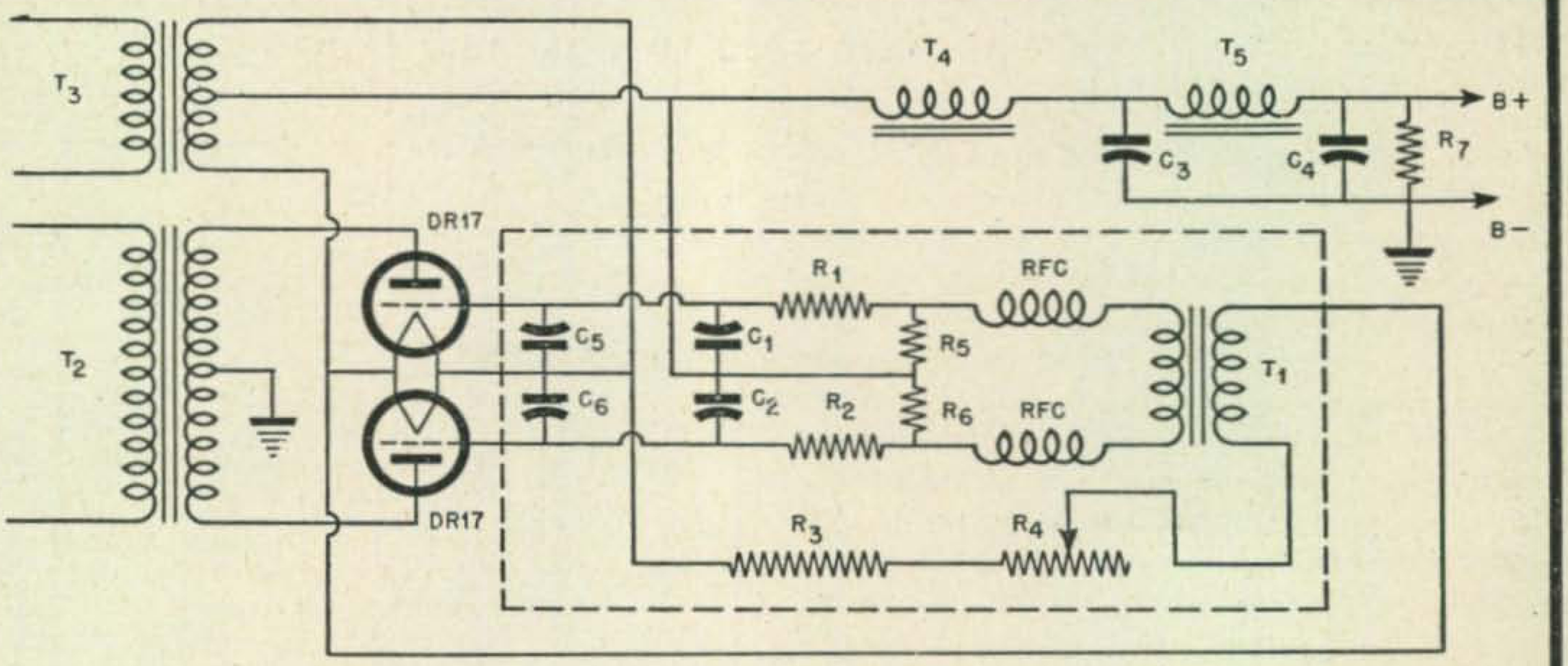

PART NO.	DESCRIPTION
C-1, C-2	.1 μf 600 V
C-3, C-4	8 μf 2000 V
C-5, C-6	.02 μf 5000 V
R-1, R-2	1000 Ω 10 W.
R-3	150 Ω 25 W. RHEOSTAT
R-4	50 Ω 25 W. WITH SLIDER
R-5, R-6	5000 Ω 25 W.
RFC	2.5 MH
T-1	5 VOLT 2 AMP. FILAMENT TRANSFORMER USED AS THYRATRON TRANSFORMER
T-2	PLATE TRANSFORMER (1500 VOLTS, 250 MA)
T-3	RECTIFIER FILAMENT TRANSFORMER 2.5 VOLTS 10 AMP.
T-4	SWINGING CHOKE 5 TO 20 HENRY 250 MA
T-5	SMOOTHING CHOKE 12 HENRY 250 MA

Fig. 1. Circuit diagram, thyratron control power supply

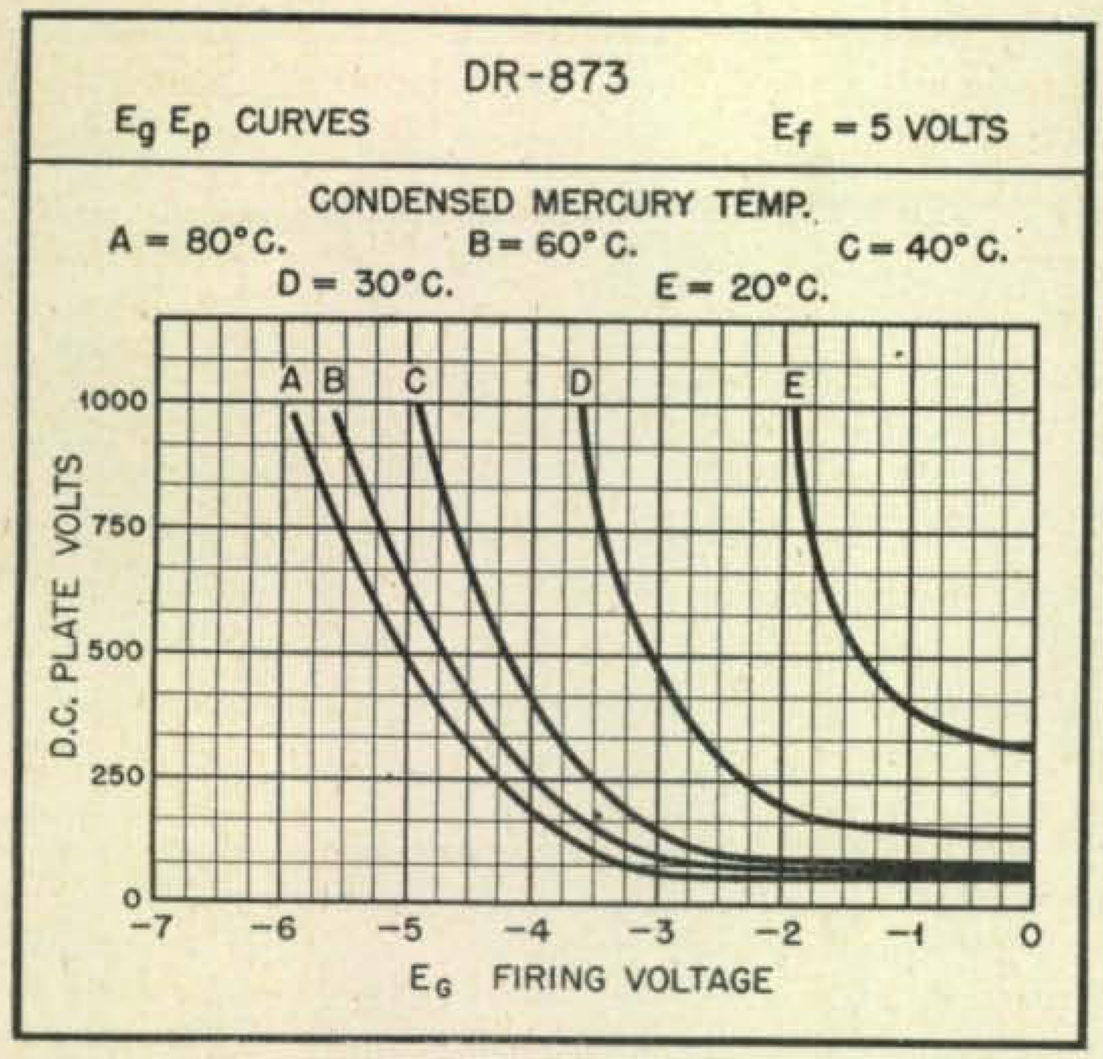

Bias voltage requirements under varying conditions for DR-873 grid controlled rectifier. Temperature effect on firing voltage varies widely with different rectifiers

currents may be obtained. The value of grid resistance (*R1*, *R2*) should be as low as possible for the available grid driving power. *RC* should be less than .02 seconds in order to minimize loss of grid voltage and lower the magnitude of impressed grid signal caused by the effects of grid circuit components.

It is quite important that the voltage applied to the rectifier tube filaments by T3 be very close to 2.5 volts (±5%) because low filament voltage causes high internal tube voltage drop with subsequent bombardment of the filament and loss of emission. High filament voltage will shorten the life of the filament. When first placing these tubes in operation it usually takes from 15 to 30 minutes for the mercury to be distilled from the elements of the tube where it may have splashed during shipment and handling. Application of plate voltage during this period may cause arc-back and damage to the tube. Arc-back causes pieces of the filament to be knocked off, thus reducing the amount of emissive area. Once the tubes have been broken in, 30 to 60 seconds is sufficient heating time. As with all mercury vapor tubes, they should be isolated as much as possible from the transmitter because electromagnetic fields produce a breakdown in the mercury vapor, reducing life. In extreme cases a shield may be necessary around the tubes, although adequate ventilation must be provided.

Construction

By mounting the components of the phase-shifting network in a neat group in the front right-hand corner of the chassis, it is practical to build the unit so as to appear identical to a standard fixed supply from outward appearances.

The 10″ x 17″ x 3″ steel chassis provides sufficient room and is bolted to a 1/8″ x 10½″ x 19″ steel panel. Lighter panels would require additional angle brackets to prevent sagging, if the unit is to be mounted in a relay rack.

The DR17 rectifier tubes are mounted in special high-voltage type Mykroy sockets because of the high voltage encountered, although any good ceramic socket would suffice. These rectifiers are mounted in the left rear of the chassis with plenty of room for free circulation of air. A neat job is obtained by cabling the power leads to the plate caps. The photos do not show it, but the thyratron transformer is mounted on stand-off insulators. An extra large hole is cut in the chassis to provide plenty of clearance for the high voltage leads from all the transformers. In the under-chassis wiring all leads at a high potential above ground are provided with heavy sleeve tubing insulation, and all small leads are tied to terminal strips.

The grid resistors are mounted near the tube sockets and should be kept clear of other wiring because of the high voltages encountered. Deviating from the listed values of capacitance or resistance in the phase-shifting network will cause the following conditions to occur: increasing the capacitance will reduce the minimum output voltage obtainable; a decrease in capacitance will

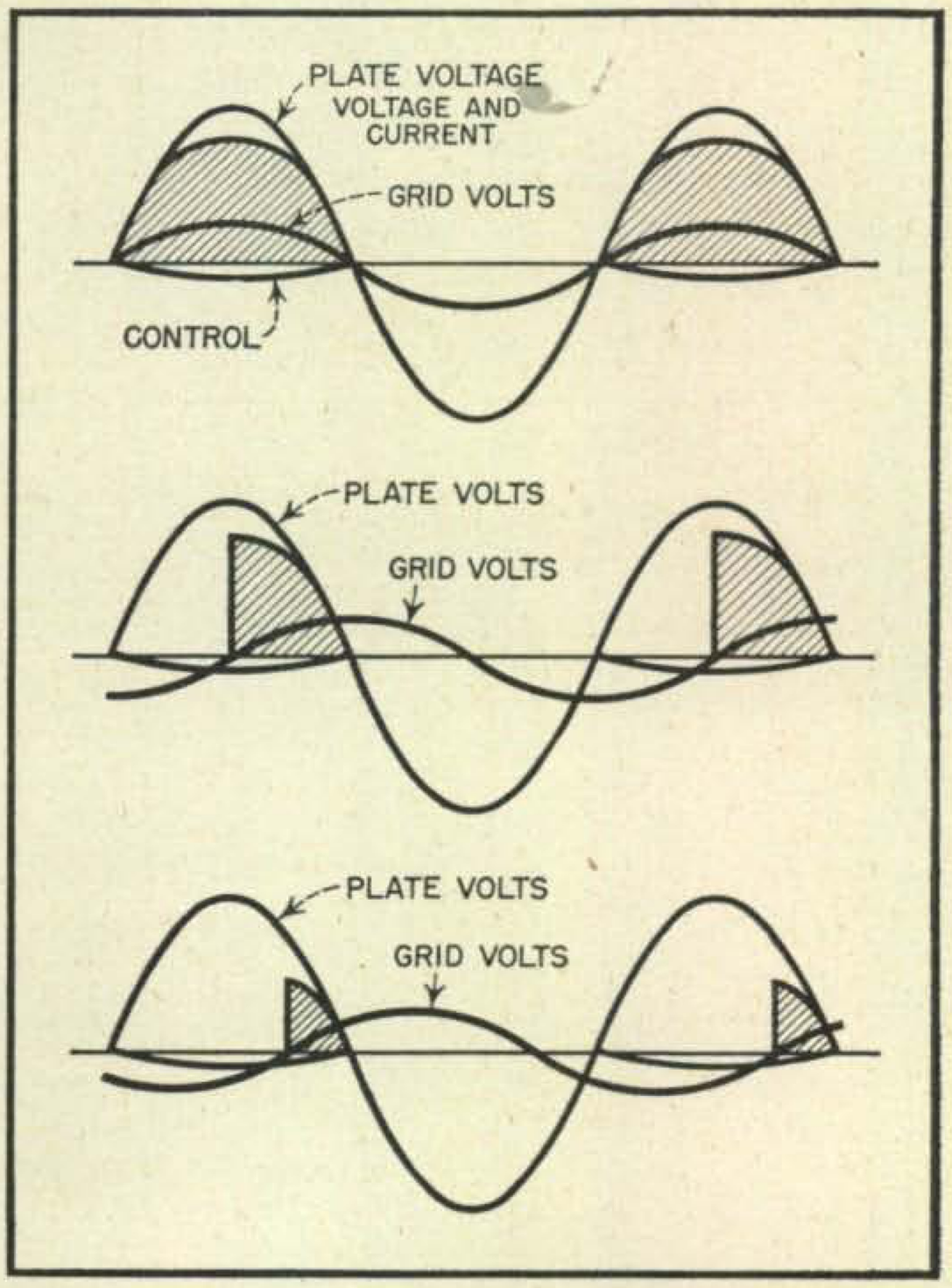

Fig. 2. By applying grid voltage early or late in the cycle, the output current is varied in the manner shown

raise the minimum point; increase or decrease of resistance will produce similar effects.

After the tubes have been broken in (sufficiently warmed up), plate voltage may be applied and the thyratron control grid resistor rotated from zero to maximum resistance. A voltmeter should be used to check the output of the supply and a gradual increase in voltage should be noted up to the maximum of the transformer in plate supply. The linearity of this voltage range can be made to taper considerably by the use of various tapered resistance types of potentiometers.

If the plate voltage output takes a radical dip or jump as the potentiometer is rotated, it is probable that there is a rough spot on the potentiometer winding or improper balance of the phasing network (wrong values of parts). The grid current should be 3 to 5 ma.

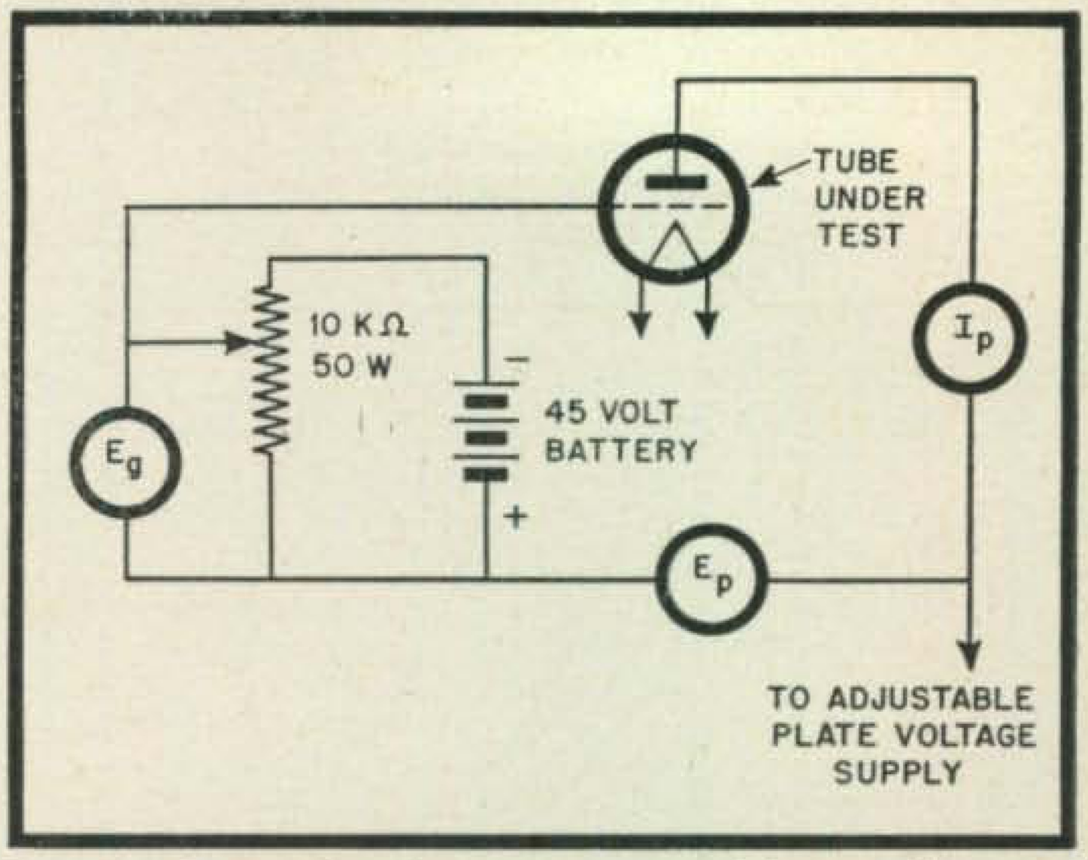

Fig. 3. Circuit for determining amplification factor of transmitting tubes to determine operating condition. With variable bias and plate voltage this is relatively simple test to perform

Applications

Probably the most important application for the grid-controlled power supply will be found in adjustment of the transmitter power input. For DX and similar work, the maximum power available is usually desired, but very often a contact is made with a local station where a smaller percentage of the available power will do a satisfactory job. For these contacts a slight adjustment on the control resistor will drop the plate voltage to a desired value, assuming c. w. is used. In the case of a phone transmitter the problem is not so simple because a change in E_pI_p conditions cause a mismatch in impedance to the modulation transformer[1], although there is a definite advantage in using this type of a supply for the following reasons:

(a). It is very much easier to adjust to the proper E_pI_p conditions for matching modulator impedance by setting the final amplifier tube's plate voltage to the exact required figure, rather than by trying to adjust taps on the modulation transformer while using a fixed plate voltage. In other words, a closer match can be made with less trouble.

(b). Knowing the required impedance for the modulation transformer to be properly matched, it is possible to have several predetermined conditions calculated, so that the voltage and current may be adjusted to any one of these by the thyratron control resistor. Since modulation impedance or load resistance presented to the modulator by the modulated r. f. amplifier is equal to:

TABLE 1—TEST CHARACTERISTICS—TRANSMITTING TUBES

Type	Fil. Volts	E_{c1} Volts	E_{b1} Volts	I_{p1} Ma	E_{c2} Volts	E_{b2} Volts	I_{p2} Ma	Mu
HY-615	6.3	vary	200	20	vary	250	20	18-22
HY-25	7.5	vary	375	25	vary	425	25	7-9
809	6.3	vary	800	20	vary	1000	20	50-60
TZ-40	7.5	vary	800	12.5	vary	1000	12.5	56-68
808	7.5	vary	1250	30	vary	1500	30	40-54
811	6.3	vary	1250	20	vary	1500	20	144-176
812	6.3	vary	1250	30	vary	1500	30	26-32
100-TH	5.0	vary	2000	40	vary	2500	40	34-42
203-A	10.0	vary	800	72	vary	1000	72	22-28
211	10.0	vary	800	72	vary	1000	72	11-13
HF-200	11.0	vary	1500	100	vary	2000	100	16-20
810	10.0	vary	1500	55	vary	2000	55	32-40
T- 200	10.0	vary	1500	100	vary	2000	100	16-20
HF-300	11.0	vary	1500	100	vary	2000	100	20-26
806	5.0	vary	2500	50	vary	3000	50	11-14
250TH	5.0	vary	2000	100	vary	2500	100	31-41
833-A	10.0	vary	2500	200	vary	3000	200	31-39
849	11.0	vary	2500	125	vary	3000	125	17-21
8005	10.0	vary	1250	50	vary	1500	50	18-22
8012	6.3	vary	650	40	vary	800	40	15-21

The manufacturer will supply characteristics on types not listed.

$$\frac{Eb}{Ip} \times 1000 = \text{Load Resistance}$$

Eb = dc plate voltage

Ip = dc plate current, ma, without modulation. Several values can be arrived at, for example:

Eb = 1500 volts / Ip = 250 ma x 1000 = 6000 ohms = 375 watts input

Eb = 1200 volts / Ip = 200 ma x 1000 = 6000 ohms = 224 watts input

Eb = 900 volts / Ip = 150 ma x 1000 = 6000 ohms = 135 watts input

Another useful application is found in making characteristic tests of transmitting tubes to match up modulator or amplifier tubes, testing for emission, mu, etc.

Table 1 gives the conditions for making these tests on some of the more popular transmitting tubes. In testing for mu (amplification factor) it is necessary to have an adjustable d-c grid bias connected to the grids of the tubes under test. Usually a 45 volt battery is sufficient for this purpose as the amount of current drawn is negligible (see *Fig. 3*). With the proper filament voltage applied, the tube under test is given the listed value of grid bias and plate voltage so as to provide the predetermined plate current. An incremental change in bias is now made and the plate voltage is changed to provide the same value of plate current. Mu may then be calculated by the equation:

$$\mu = \frac{\triangle Ep}{\triangle Eg} \qquad Ip \text{ constant}$$

for example:

$Ec1 = 12$ volts $Ep1 = 1000$ volts $Ip1 = 100$ ma
$Ec2 = 17$ volts $Ep2 = 1500$ volts $Ip2 = 100$ ma

$$\mu = \frac{500}{5} = 100$$

An emission test is one of the most common performed on vacuum tubes and, in general, if the emitter (filament) is emitting evenly an emission test provides an excellent indication of the tube's usefulness.

The principal disadvantages of the thyratron controlled power supply are:

1—Greater number of component parts to cause breakdown trouble.
2—Unsafe condition of floating the thyratron transformer.
3—Peak inverse voltage rating of thyratron lower than diode.
4—Poor output wave shape when less than 50% of supply voltage used.

It is our personal opinion, however, that the advantages far outweigh the disadvantages and it is only a matter of time until the popularity of the thyratron will become universal among hams. The writer wishes to acknowledge the help of W2MPS in construction work and tests.

REFERENCES

Everitt—*Communications Engineering*—Chapter 10
Eastman—*Fundamentals of Vacuum Tubes*—2nd Edition—Page 220
Terman—*Radio Engineering Handbook*—Page 949
Cockrell—*Industrial Electronics Control*—Chapter 16
Millman & Seely—*Electronics Manual*—1st Edition
Gulliksen & Vedder—*Industrial Electronics*—2nd Edition

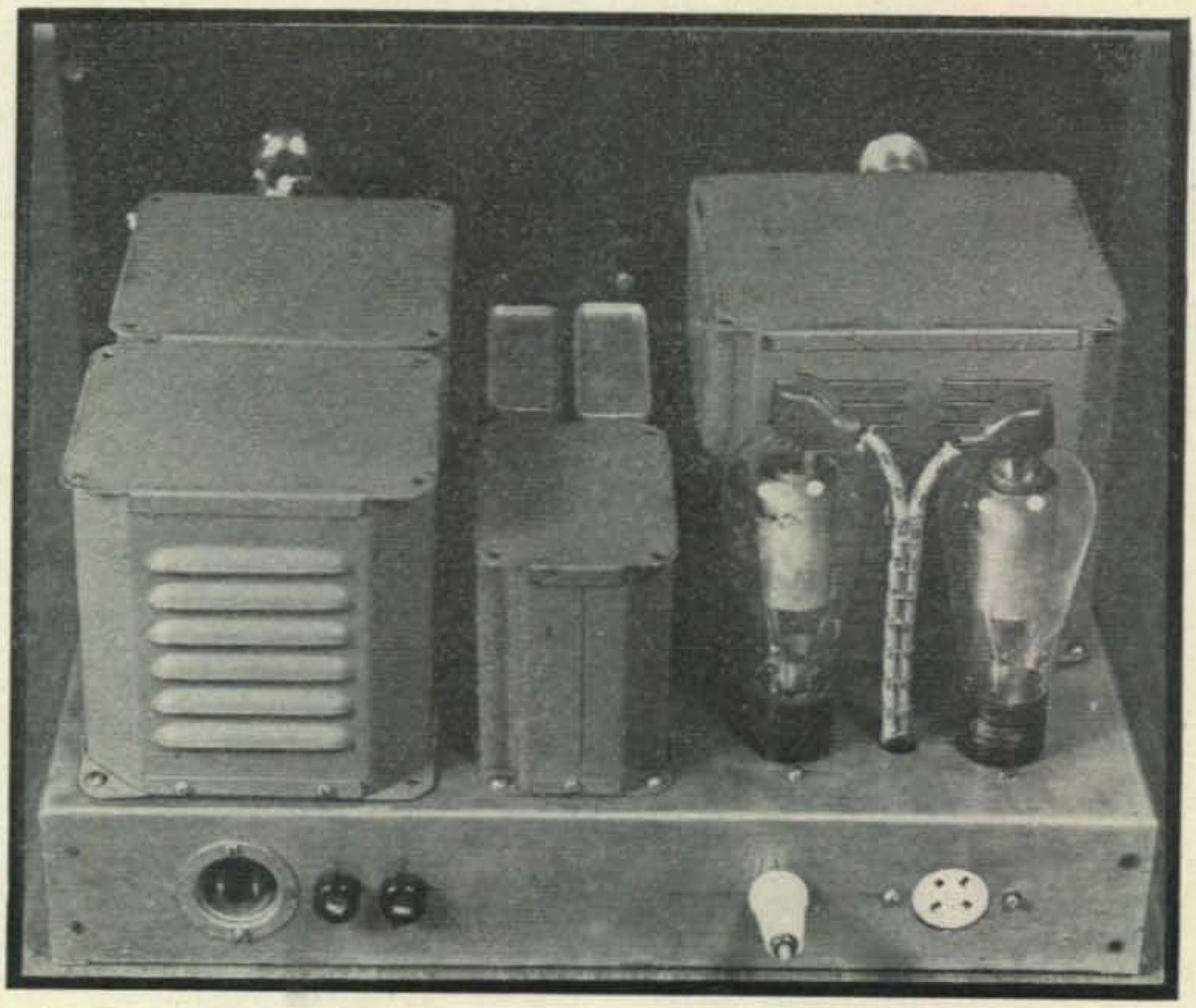

Thyratron power supply presents conventional appearance above chassis

really regulated

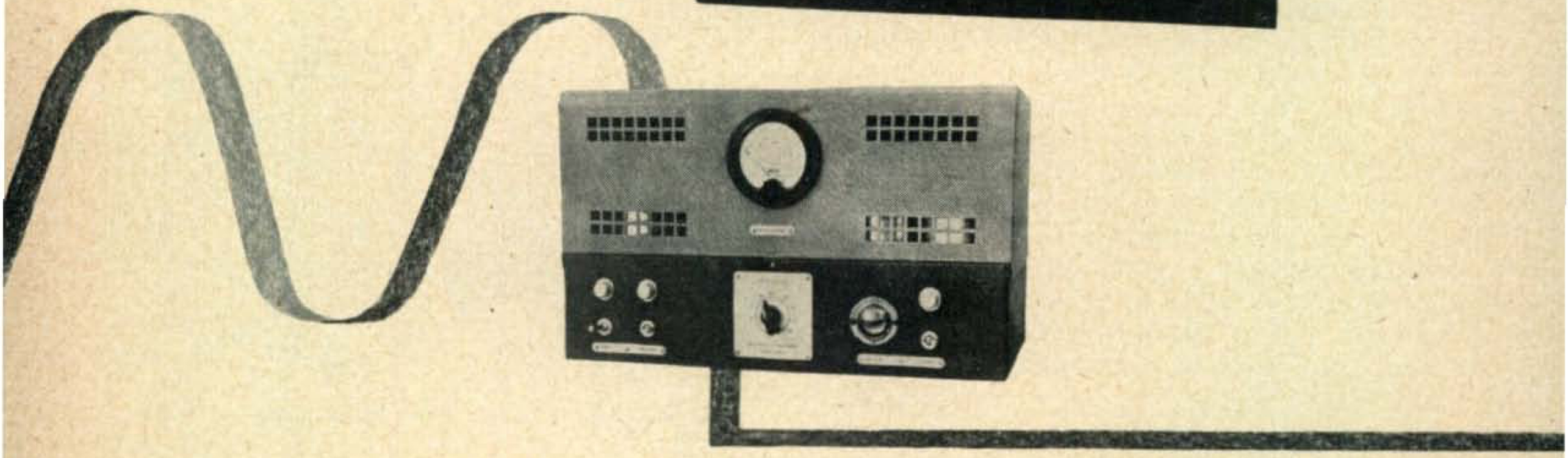

Frank H. Tooker, W2VQL
Box T, Lakehurst, N.J.

At one time or another, most of us have had our troubles with the wandering output voltage of a conventional rectifier-filter type power supply. True, there are lots of applications around the shack where even a 30 or 40 percent change in supply voltage with changes of line voltage and load current is no great drawback. But there are quite a few other uses where a change in B-plus voltage is about as welcome as a pink QSL from the FCC, or one of those Presidential "greeting" cards. It need hardly be emphasized that a VFO without regulated B-plus is an invitation to chirp and frequency shift. But there are also lots of other applications where a really stiff supply is worth its weight in Fort Knox potatoes.

For one thing, when firing up and testing a new piece of gear on the bench, a regulated supply lets you know what the thing is really doing, without the necessity of making allowances for the rubbery supply voltage of the average utility bench power unit. And the highest "hi-fi" amplifier ever built will behave better and have less tendency to take off by itself at low frequencies if the power supply has approximately zero internal impedance, or thereabouts, as seen looking back from the load.

Another characteristic of a good regulated supply that's downright indispensable once you get used to using it is the variable output voltage. It's a great convenience to be able to jockey the supply voltage to a stage or unit up or down as you please when testing or tuning up, especially when you can rest assured it will stay "put" within the limits of its current capacity, and give you warning when that capacity is exceeded. A crying need for this kind of power supply came to a head at W2VQL recently, resulting in the development of the unit described here, with most gratifying results.

TABLE I

Output Voltage (A)	Control Grid Voltage (B)	Plate Voltage (C)	Input Voltage (D)	Output Current (MA)	Regulator Grid Bias (A) - (C)	Cathode Voltage (E)
90	-3.57	26.0	480	0	64.0	--
100	-3.58	36.8	480	0	63.2	--
110	-3.59	47.5	480	0	62.5	--
120	-3.60	58.5	480	0	61.5	--
150	-3.61	94	480	0	56	--
180	-3.62	130	480	0	50	--
240	-3.66	200	480	0	40	--
350	-3.82	330	480	0	20	--
90	-4.4	54	440	50	36	-1.25
90	-5.5	67.5	400	100	22.5	-2.4
90	-6.4	75	375	150	15	-3.6
90	-7.4	82	340	200	8.0	-4.8
150	-4.7	122	440	50	27.5	-1.4
150	-5.9	132	400	100	17.5	-2.7
150	-7.2	141	365	150	8.6	-4.2
150	-8.3	147	340	200	2.7	-5.3
240	-4.3	219	440	25	20.5	-0.85
240	-5.0	226	420	50	14.0	-1.65
240	-5.8	232	400	75	8.3	-2.45
240	-6.5	235	380	100	4.6	-3.5

Table 1. Measurements are made with a VTVM having at least 10 megohms input impedance.

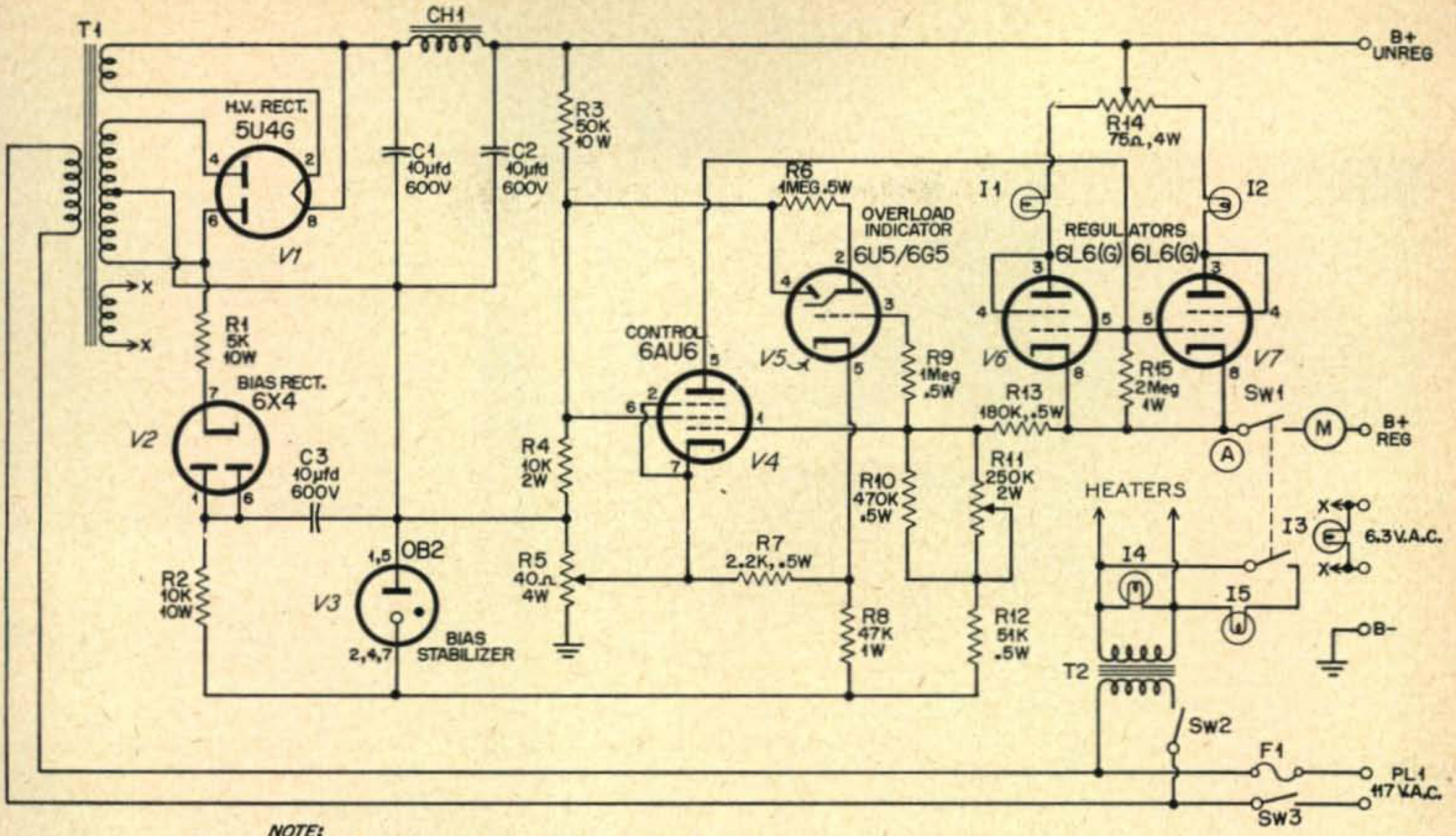

NOTE:
1. CIRCLED LETTERS REFER TO COLUMNS IN TABLE 1.

C1, C2, C3—10 µfd., 600v.
R1 — 5000 ohms, 10w. wirewound.
R2 — 10,000 ohms, 10w. wirewound.
R3 — 50,000 ohms, 10w. wirewound.
R4 — 10,000 ohms, 2w.
R5 — 40 ohms, 4w. potentiometer.
R6—1 megohm, ½w; part of magic eye assembly.
R7—2200 ohms, ½w.
R8—47,000 ohms, 1w.
R9—1 megohm, ½w.
R10—470,000 ohms, ½w.
R11—250,000 ohms, 2w. potentiometer.
R12—51,000 ohms, ½w.
R13—180,000 ohms, ½w.
R14—75 ohms, 4w. potentiometer.
R15—2 megohms, 1w.
I1, I2, I3, I4, I5—Pilot lamp, brown bead, #47: 6-8v. @ 0.15 ma.
Sw1—d.p.s.t. toggle.
Sw2, Sw3—s.p.s.t. toggle.
T1 — Power transformer, 400-0-400v. @ 200 ma., 5v. @ 3 amps., 6.3v. at desired amperage. Stancor PM8412 or equiv.
T2—Filament transformer, 6.3v. @ 3 amps. Stancor P-6466 or equiv.
M—0-200 ma. milliammeter.
Ch1 — Smoothing choke, 8h. @ 200 ma; Stancor C-1721 or equiv.
F1—Fuse, type 8AG, 3 amps.
Pl1—Recessed connector, Jones 61-F10 or equiv.

Fig. 1. Wiring diagram and parts list of the "Really Regulated" power supply. Designed to supply a regulated voltage with less than 0.2 volts maximum variation at full load at any voltage from 90 to 350 volts. Maximum current capacity is 200 ma.

the v-f-o keying now sounds nearer to WWV instead of a musical saw, and the workbench no longer gets littered with freshly pulled hair when something is being tested.

After some headscratching, it was decided that a supply providing regulated voltage anywhere in the range from about 90 to 350 volts, and capable of delivering about 30 watts of power to the load circuit, would cover most contemplated uses. In addition, it was desirable that the output voltage be really stabilized over the range, not just within a few volts, but within fractions of a volt. How well the present unit fills these needs can be seen by a look at *Table 1*, and the curves of *Fig. 2*.

General Design Considerations

Regulated power supplies of the electronic variety require three principal parts: (1) a

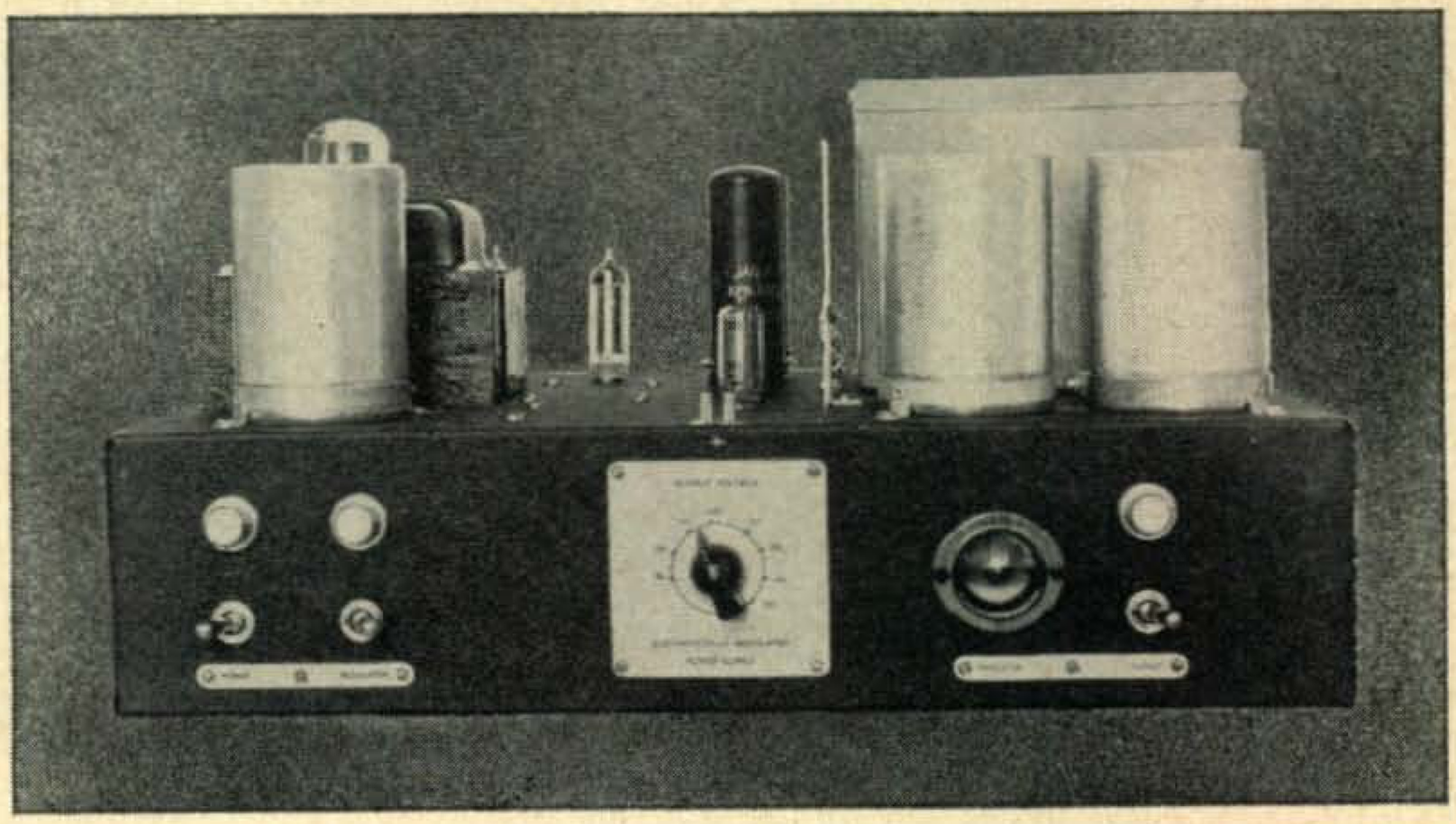

Front view of the power supply showing the loss-of-regulation "eye" indicator.

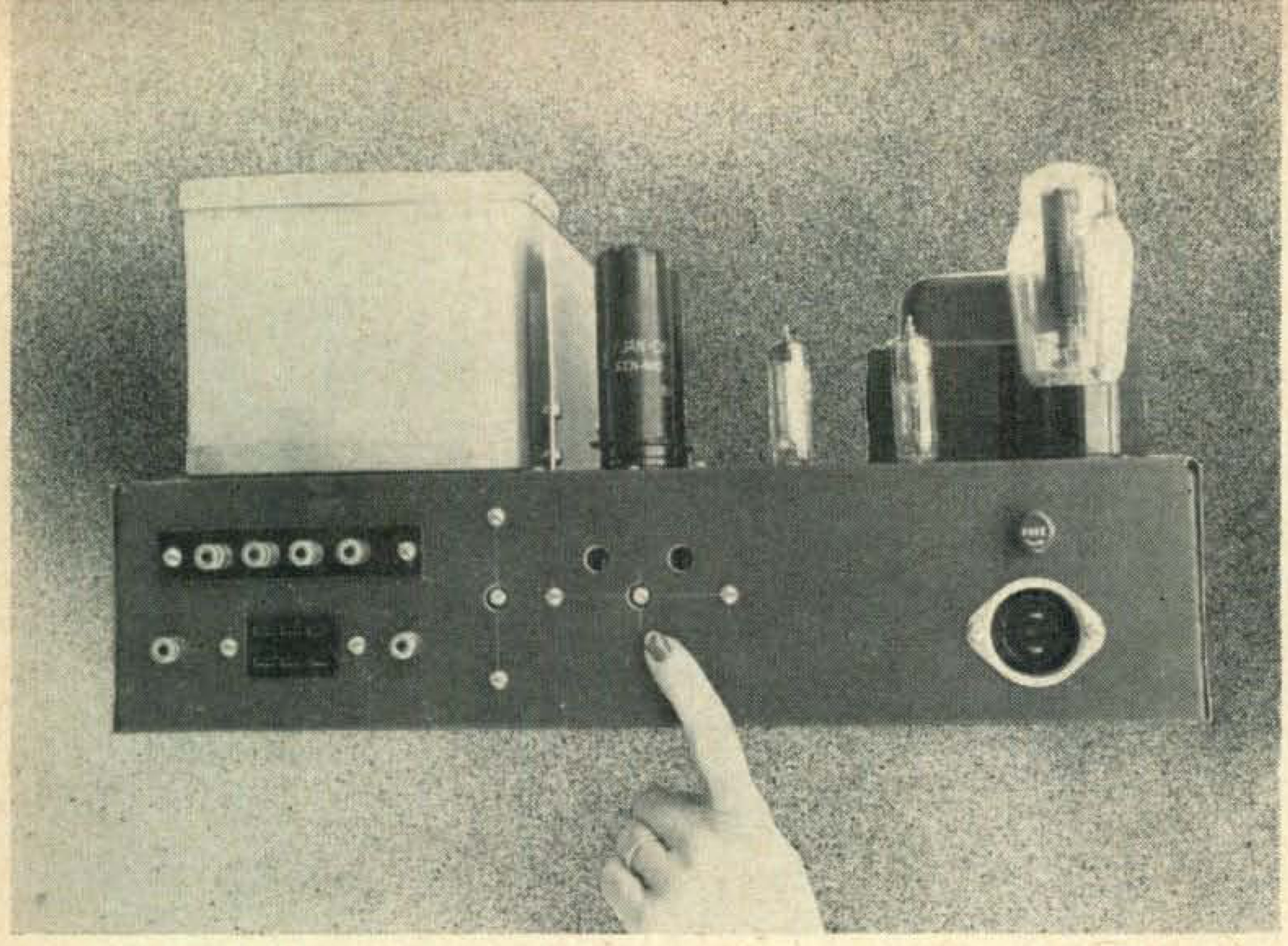

Rear of the regulated supply, R5 being pointed out.

control stage to sense the output voltage error and provide a control signal; (2) a regulation stage, the impedance of which can be varied by the control signal; and (3) an unvarying reference voltage against which to compare the output voltage. The first need can be filled by a good, high-gain, sharp-cutoff pentode. The second requirement is easily met with a beam tetrode or tetrodes in parallel, as required by maximum current drain considerations. If the amplification factor of this stage is high, so much the better. The third need is best met with a battery of some sort, but can also be handled by a gas voltage-regulator tube, or even by a resistorless neon bulb in a pinch.

The voltage applied to a regulator from the rectifier-filter circuit must of course always be considerably higher than the required output voltage. The difference between this raw supply voltage and the regulated output voltage appears as the voltage drop across the regulation tubes, which varies as the plate-to-cathode impedance of the regulation stage is varied by the control signal. To make control possible, the circuit must be so designed that any change in the regulated output voltage, slow or rapid, will cause a change in the grid-to-cathode voltage of the control tube. The resulting change in the control tube plate current in turn is used to alter the grid-to-cathode voltage of the regulation stage, in such a direction that the plate-to-cathode impedance of the regulation stage changes in the proper direction to counteract the change in output voltage. In an electronic supply, this sequence of actions is so rapid that it can be considered instantaneous for all ordinary usage. It easily follows the ripple frequency of a poorly filtered supply, and tends to wipe out the effects, so that the regulator serves as a very effective filter in addition to its regular function.

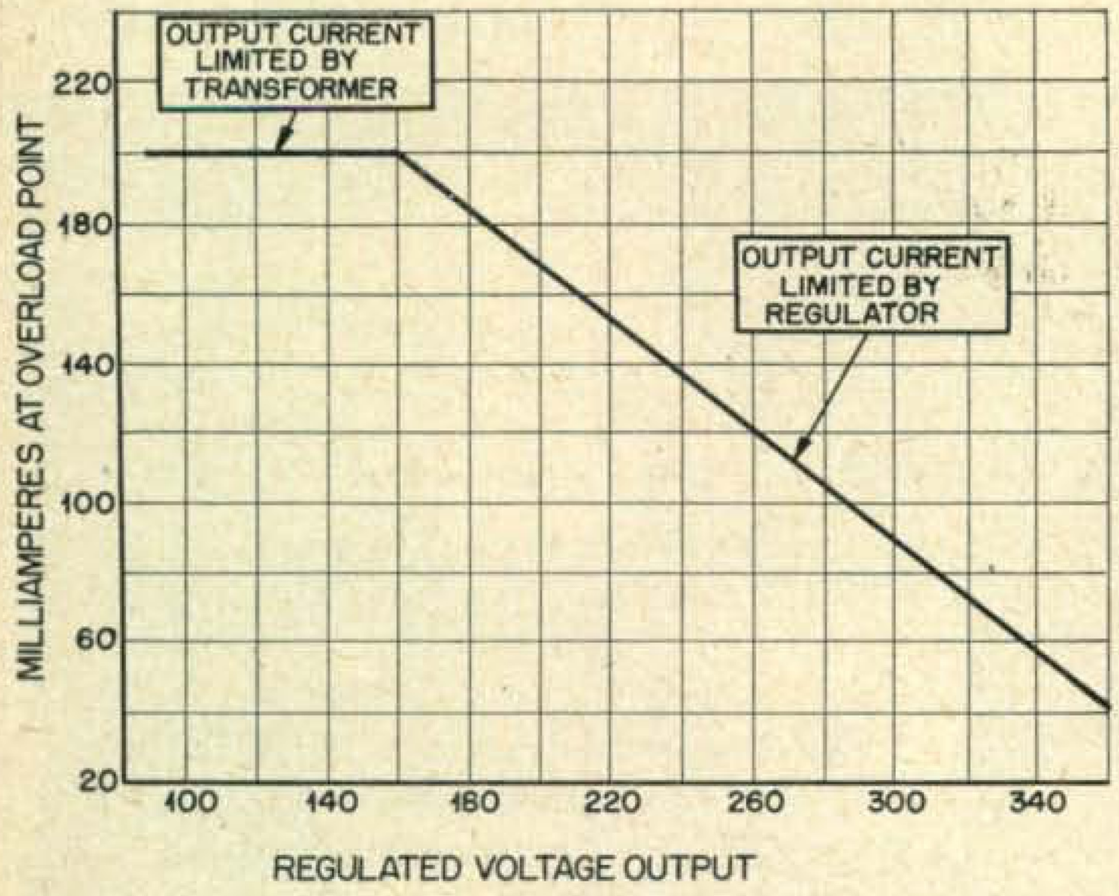

Fig. 2. Performance of the supply, showing the current capacity available at any specific voltage.

In designing a supply from scratch, it is necessary to know the range of voltages wanted, and the maximum current drain that will be required at the maximum voltage. When these values are known, the type and number of regulation tubes can be determined, from a study of the characteristics of available tubes. In general, Class A plate dissipation and plate current ratings apply. In this connection, note that, if the range of output voltage is to be large, as in the unit described here, it is necessary to use tubes of higher internal impedance than the more common 6B4 or 6AS7G. Use of the 6AS7G in this circuit would have limited the lowest regulated potential to about 165 volts, instead of about 75 volts, which is the point where the present unit begins to lose control.

Special Features

Certain special features were wanted in the supply of a sort not usually included in standard electronic regulator circuits. For one thing, a higher degree of regulation accuracy than that provided by conventional regulators was required. Examination of the tabulated performance will show that, at 150 volts output, the voltage changes only 500 microvolts per milliampere of load current, up to a drain of 100

ma. Even to 200 ma., the figure remains under one millivolt per mil. An overall tell-tale was also a requisite, so that loss of regulation would be immediately apparent. This is provided by the 6U5/6G5 tube, which blinks when control is lost. A means of balancing the current in the regulation tubes is also provided, which is useful if the supply is to be run near its maximum ratings. Without it, one tube may be caused to overheat by carrying more than its share of the load on heavy drains.



Licensed as W2VQL in 1947. Operated mostly on 10 meter phone and 20 meter CW. Principle interest is in receiving and test equipment rather than operating. Started with a crystal set when seven years old, spent twelve years in commercial electronics as lab technician and engineer, and at present is in the printing business with the electronics taking the hobby role. He prefers it that way.

Circuit Theory

Details of the circuit action can be followed in the schematic of *Fig. 1*. The filtered output from the 5U4G rectifier (*V1*) is applied to the plates of the regulation tubes, *V6* and *V7*, with the transformer center tap returned to ground through *R5*. A negative voltage is thus developed across *R5* which is proportional to the current drain. This enters into the control action, as explained below. The 6X4 bias rectifier (*V2*) provides the negative voltage across *V3*, the OB2 voltage regulator for the reference voltage.

The reference voltage provided by *V3* and the regulated output voltage, which appears at *V6* and *V7* cathodes, are connected through limiting resistances to opposite ends of potentiometer *R11*, in the control grid circuit of *V4*, the control amplifier. A voltage of –2 or –3, depending upon the setting of *R11* and the current drain from the supply, appears between grid and cathode of *V4*. Since the cathode voltage of *V4* is held substantially constant by *V3*, changes in the grid-to-cathode voltage are only produced by changes in regulated output voltage.

Plate current for *V4* is supplied through *R15*, which is also in the grid circuit of *V6* and *V7*, the regulation tubes. Thus a change of *V4* plate current alters the voltage drop across *R15*, changing the bias on *V6* and *V7*, which alters their effective plate-to-cathode impedance. The polarity of the change is such that, when the output voltage tends to increase, *V4* plate current increases, grid voltage on *V6* and *V7* becomes more negative, *V6* and *V7* internal impedance increases, and the output voltage between *A* and ground is returned to almost exactly the former value.

When the output voltage tends to decrease, the effect is exactly opposite, again holding the output voltage at the preset value. Due to the direct coupling, the control circuit follows the slowest changes (in fact it's a d-c amplifier), yet it can also respond to changes that take place extremely rapidly. *(Note: Bypassing* R13 *with a suitable capacitor will further improve the ripple-swamping action and response to rapid changes of output voltage—Ed.)* Perhaps the simplest way to think of the circuit is to consider *V6* and *V7* as two variable resistors in series with the supply voltage, that can be varied by *changes* in the output voltage in such a way as to correct for all but a very small part of the change.

The overload monitor (*V5*) is so connected that the same change in output voltage that appears at the grid of *V4* is impressed on its grid. The cathode is held at the correct voltage through its connection to the junction of *R7* and *R8*. As long as the output voltage is held substantially constant by action of the regulation tubes, the grid-to-cathode voltage of *V5* can change very little, and the eye will stay open. However, when *V4* loses control of the output voltage, the grid-to-cathode voltage of *V5* changes sharply in the direction which closes the eye, indicating loss of regulation. A monitoring voltmeter across the output would serve the same purpose, but is not as sensitive unless operated in a bucking circuit, a highly inconvenient arrangement in a supply designed to provide a variable output voltage. It is not advisable to substitute a 6E5 for the 6U5, as it draws a greater cathode current, which is undesirable in this application.

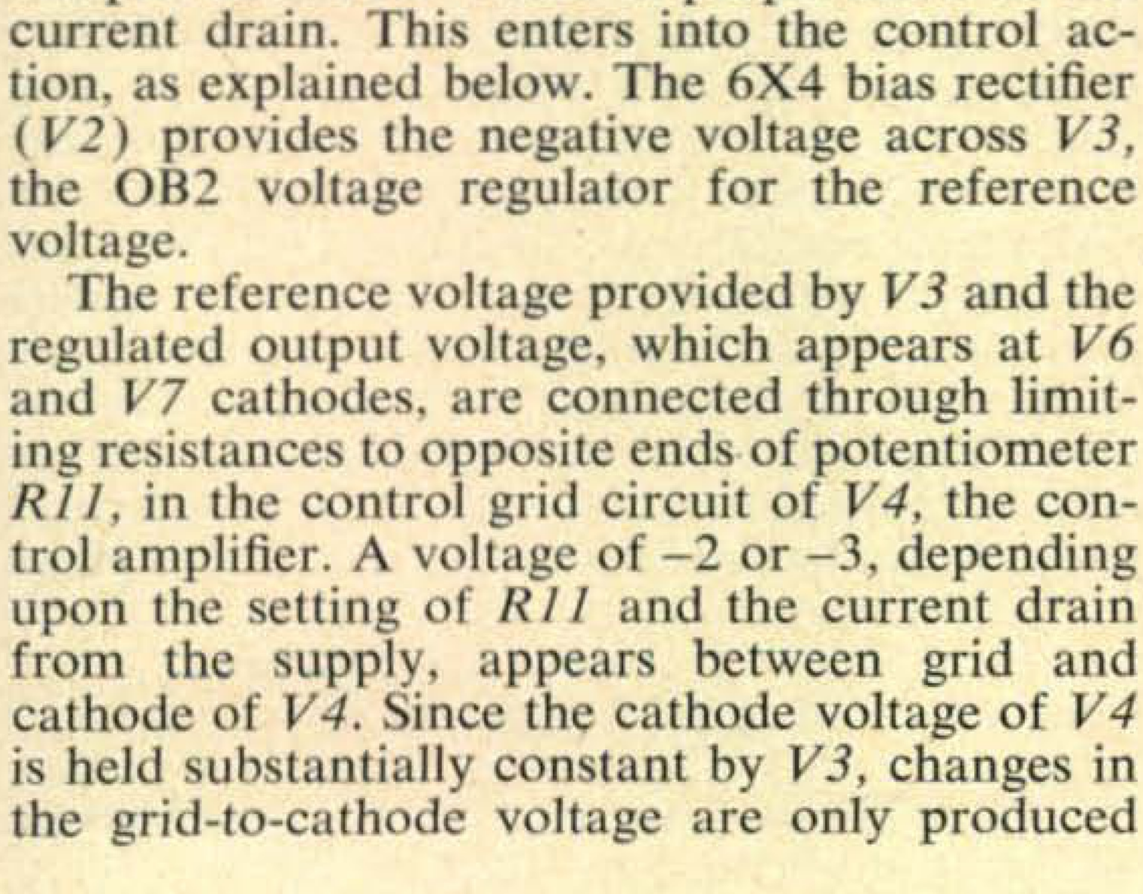

Fig. 3. The adjustment of R5 is important to the regulation, as can be seen from this graph. When R5 is properly set the variation in output voltage is difficult to detect, even over a wide current range.

(Continued on page 51)

Really Regulated

(from page 25)

Construction

As with most power supplies, construction is not at all critical, since no tuned circuits are involved. However, it is wise to locate the control tube as far as practicable from the external magnetic fields of the transformers and chokes, and to dress its leads well away from other leads carrying a.c. or pulsating d.c. Use of a television type power transformer with a copper belly band for suppression of external field was made in the present unit, but it is not absolutely necessary. If the layout and parts list given are followed, there should be no difficulty in getting correct operation as soon as the unit has been fired up and adjusted. The physical layout and placement of parts is clear from the photographs, and can be varied within reasonable limits without change in performance.

Adjustment and Operation

When the wiring has been completed and double-checked, set *R5* and *R11* at about the middle of their ranges, and connect a load that will draw about 200 ma. at 150 volts. Turn on the supply, set *R11* to give 150 volts output, and adjust *R14* so that *I1* and *I2* glow with equal brilliance. This balances the cathode currents of *V6* and *V7* at the maximum drain condition, which is the place where balance is most desirable. Next change the load so that a much smaller load current is drawn, and note the change in output voltage produced. The change will be very small, and may be difficult to measure unless a bucking voltage and sensitive meter can be used.

When the best possible regulation is required, as when using the supply for precise measurement, or as a klystron repellor voltage source, a more careful adjustment of *R5*, the bias correcting control, is required. Changes in load current cause small changes in the voltage drop across *R5*, which appear in the grid-to-cathode bias of *V4* with such polarity as to further reduce the change of output voltage. By changing the load current a definite amount, and adjusting *R5* each time, a setting of *R5* will be found which results in minimum change of output voltage

(Continued on page 53)

"Hot" Receivers

Bob Henry offers a reward for return or information leading to the conviction of those responsible for the midnight loss of two Collins 75A3 receivers, (#1573 and 1585), a 32V3 Collins transmitter (#1489), an Elmac PMA-6A 12 volt receiver (#3096) and an Elmac power supply PSR-12 (#554).

NEW...FOR TWO AND SIX METER OPERATION

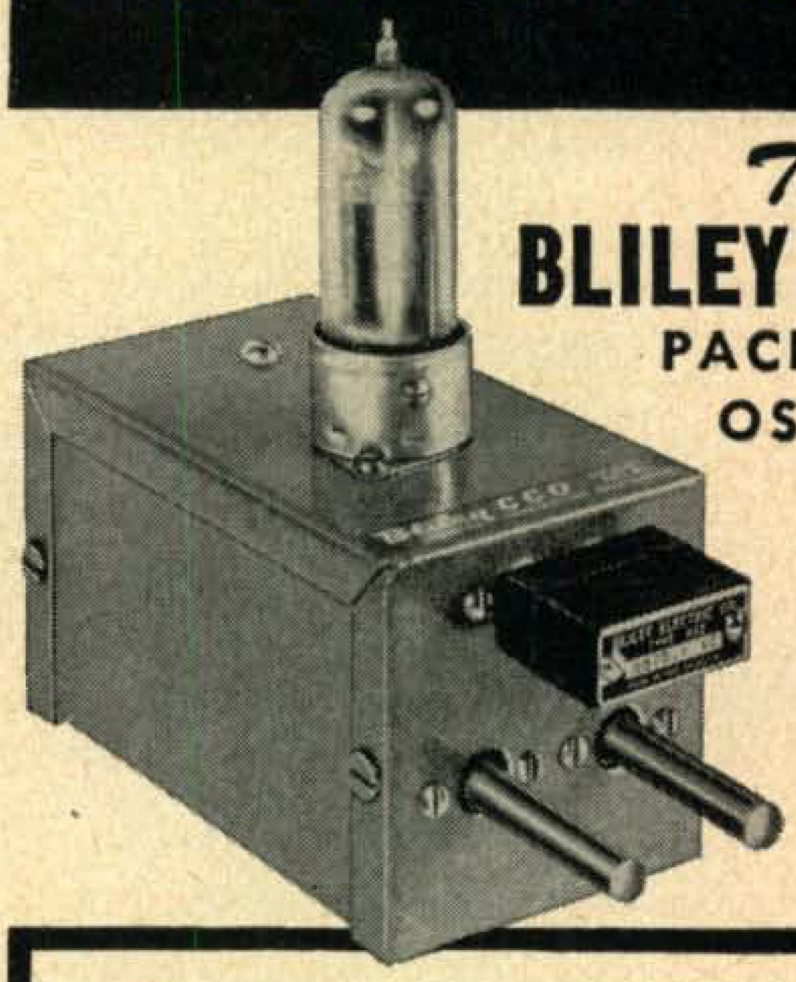

The BLILEY CCO-2L PACKAGED OSCILLATOR

Now available for your amateur rig, a completely packaged oscillator unit designed and engineered to utilize the many advantages of crystal control on two and six meters. Output is obtained directly on six meters; operation on two meters requires only a tripler stage.

The CCO-2L is the ideal oscillator for an efficient two band transmitter, or as a basic unit in new construction. Features include: adequate drive for V. H. F. medium power beam tubes, no self-oscillation under any operating conditions.

The CCO-2L is semi-enclosed in a metal case with power input and r.f. output terminals in the back for short direct external connections. The oscillator tube specified is a 12BH7.

CCO-2L Output: 48 to 54 mc; Dimensions: 2¼" x 2¼" x 4"; Price: $11.95 less tube and crystal (8-9 mc).

The following Bliley AX2 crystals recommended for use with the CCO-2L:

AX2 crystal for six meters, 8333-9000 kc — $2.95

AX2 crystal for two meters, 8000-8222 kc — $2.95

See your amateur distributor for these high quality amateur products.

Bliley CRYSTALS

BLILEY ELECTRIC COMPANY

UNION STATION BUILDING

ERIE, PENNSYLVANIA

(*from page 51*)

for a given change of load current. This action is so good at the optimum adjustment that it becomes difficult to detect the change in output voltage by ordinary means.

Performance Data

The measured performance of the supply is illustrated by the curves of *Fig. 2*, and the data of *Table 1*. If the specified parts are used, there will be little change of performance over months of service life, as ample factors of safety have been specified. Balance adjustment is usually only necessary when a tube is changed in the regulation stage. If the unregulated output voltage is used simultaneously with the regulated voltage, some upset of the regulation must be expected, since the current from the unregulated tap will also pass through *R5*. With this circuit, operation on either the regulated or unregulated output is feasible, and if the drain from the unregulated tap is steady, both outputs may be used with little serious effect on the regulated voltage. However, if the drain on the unregulated tap varies, it is better to revamp the circuit to make use of the more conventional arrangement, with the reference voltage tube directly in series with the control tube cathode. This does not provide the bias correcting feature of the present circuit, but is more desirable for the operating condition just described.

21-Mc Converter

(*from page 28*)

tween *L4* and *L3* until the meter shows a sharp rise as the signal is tuned into the 21-Mc band edge, with a mild drop in the center of the band. This slight over coupling helps to give relatively uniform response out to the band edges.

As adjusted at W8LHK, the converter gives the overall response shown in *Fig. 4*. Excessive coupling between *L3* and *L4* will result in a response like *Fig. 5*, while too little coupling will drop the response at the band edges.

In the four months or so of use at W8LHK up to the time of writing, the stability, sensitivity, and signal-plus-noise to noise ratio have been exceptional. Disconnecting the antenna causes a 4 to 6 db. drop in noise output, indicating that the limiting factor is not in the converter. Several solid QSO's with weak VK3 and KH6 stations were had during brief band openings, with the blessed advantage of the slow-tuning 80-meter receiver bandspread. Only one fly remains in the ointment; a harmonic of the receiver local oscillator falls in the 21-Mc band in the W8LHK set-up. If you can't quell yours, learn to recognize it, at least.

Springtime is Baseball Time

Baseball Time is TV Time

TV Time is Trouble Time for the Ham whose neighbors have

'TVI'... install BUD FILTERS and avoid 'TVI'

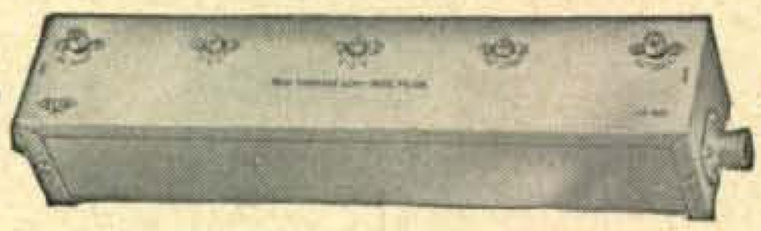

LF-601 Low Pass Filter

Interference to TV reception caused by transmissions from a Ham station can be caused by harmonics from the transmitter. They can be greatly reduced or eliminated with a Bud LF-601 low pass filter. Minimum attenuation of 85 decibels on all frequencies above 54 megacycles and a minimum of 93 decibels above 70 megacycles. Can be used with 52 or 72 ohm coax. Cut-off frequency is 42 megacycles. Maximum rejection adjustable from 55 to 90 megacycles.

LF-601 Amateur Net $13.95



HF-600 High Pass Filter

Has cut-off frequency at 42 megacycles, thus this filter rejects signals from 0 to 42 megacycles. It is within this range that the majority of signals causing interference are received. Since there is no attenuation above 42 megacycles, picture strength or quality is not affected. This unit is easily attached to the TV set.

HF-600 Amateur Net $3.00

See these highly efficient filters at your distributors.

BUD — THE MARK OF PERFECTION

BUD RADIO, INC.

2118 East 55th Street

Dept. C — Cleveland 3, Ohio

Tom Snyder, K6PGB
1542 Harvard St.
Santa Monica, California

1200 Volts, Regulated

Single-sideband seems to be here to stay and the task of providing those linearly-amplified watts seems to be divided pretty well between the grounded-grid family of power amplifiers and the beam-power tetrode linear amplifier operating in class AB_1. The latter type is capable of operating with zero watts drive, but requires rather careful adjustment of operating conditions for optimum results. Plate and screen supplies must be capable of good regulation, and the grid and screen voltages should be capable of adjustment over a considerable range to achieve best operation of the amplifier.

A regulated supply is advantageous for the bias too for it provides a simple method of adjusting the bias for linear operation and also provides the regulated function for c.w. operation. The article by Tooker, March 1955 CQ, page 22, describes a simple and effective lower power regulated supply.

Review of construction articles in the past few years seems to reveal a neglect of the higher power electronically-regulated power supply; such a device is worthy of attention, since it can provide both a good stiff voltage source and one with a handle on it that allows considerable adjustment. It is easy to construct a screen supply that will hold to within five volts variation at one thousand volts nominal output with a load swing of zero to 100 ma. d.c.

In the circuit of *fig 1*, two surplus 1625's are used to provide a voltage variable between 500 and 1200 volts. The continuous output is limited by the dissipation of the tubes and varies from 200 milliamperes at 1200 volts to 50 ma. at 500 volts. In typical service as a screen supply in a linear amplifier these ratings do not limit because of the transient nature of the screen current peaks.

The operation of a regulator can be best described as a servo system operating to maintain a constant output regardless of variations of load and source. In common with all servo networks this circuit compares a sample of the output with a reference voltage, any disparity is amplified as an error signal and used to cause a controller element to operate upon the output to reduce the error signal toward zero. The usual criteria of servo systems apply here, i.e., gain, frequency response and stability. The degree of regulation is determined by the gain of the error signal amplifier and the transfer characteristics of the controller element, in the case of the electronic regulator, with the tube types and operating conditions chosen, the gain varies with the magnitude of the plate

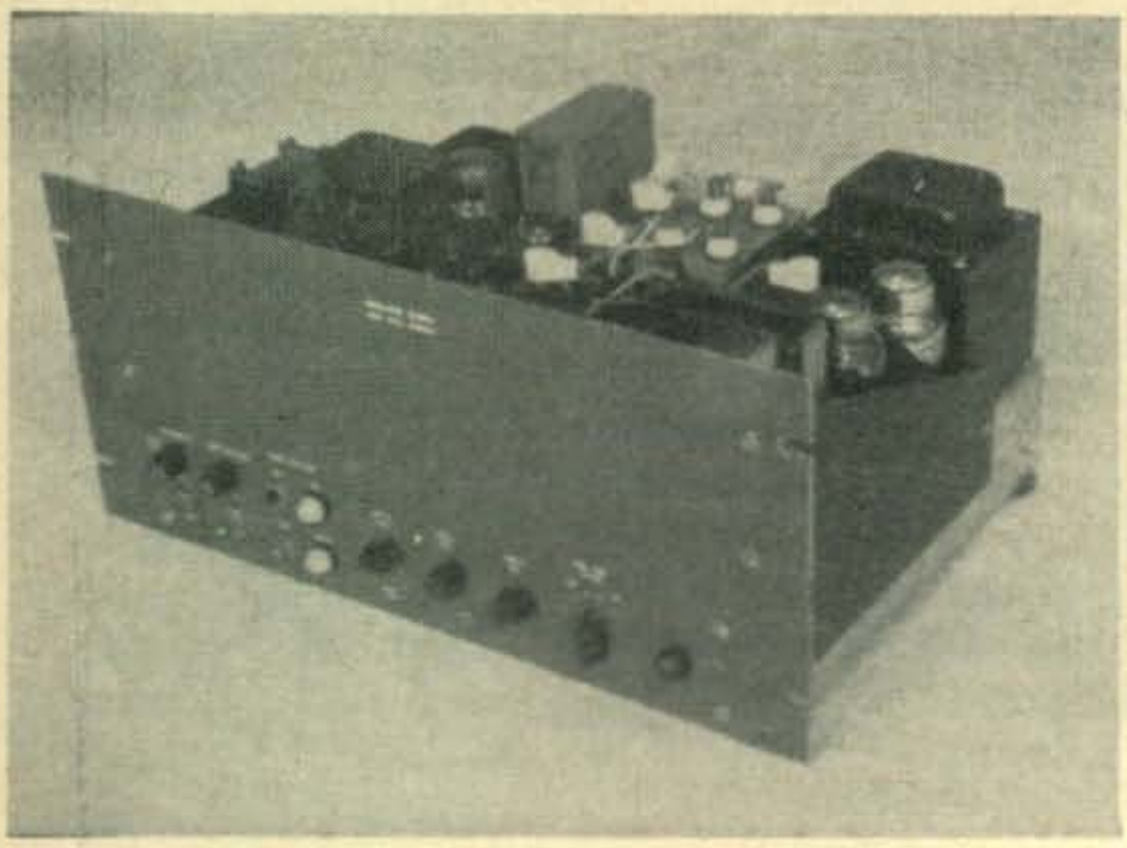

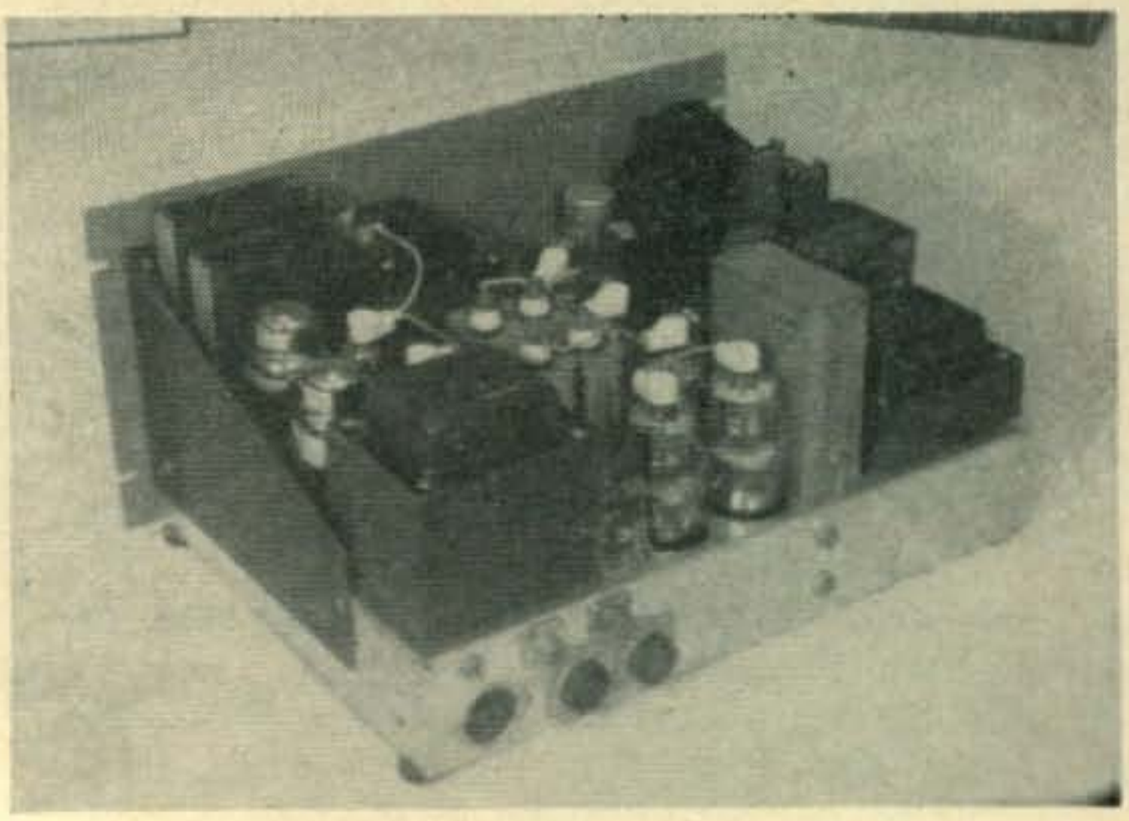

load resistor of the error signal amplifier. Speed of response suffers with larger values of the load resistor and values larger than one megohm are not usually required; the lower limit is set by the plate dissipation of the d.c. amplifier at conditions of maximum plate current. The factor of stability is taken into account by the resistors found in the grid leads of the various tubes; these suppress tendencies toward high-frequency oscillations.

In this circuit, the 6AC7, chosen because of its high gain and sharp cutoff characteristics, acts as a comparison amplifier. A source of reference potential, from a glow-discharge tube, appears at the cathode, and a sample of the output, derived from a voltage divider network, appears at the grid. Error signals, resulting from inequality of these two voltages, are amplified and used to vary the static resistance of the series controller tubes, the 1625's, to reduce the inequality toward zero.

Because of the high output voltage desired, two glow tubes were employed so that the sample of output voltage obtained from the voltage divider would not be so small compared with the output. This avoids unnecessarily reducing the gain of the amplifier loop. The 0.1 mfd capacitors across the glow tubes minimize noise pulses characteristic of such tubes, and are the largest recommended. It should be observed that this portion of the circuit is approaching that of a relaxation oscillator, such as is used with neon tubes in sweep generators, and if the glow tubes were to take off in a similar manner, regulation of the output would suffer! The 0.1 mfd capacitor between the output and the grid of the 6AC7 increases the gain of the loop to ripple frequencies and thus improves the filtering action.

In setting up the voltage divider network for specified limits of output voltage, it is necessary to decide upon a value for the potentiometer to be used, the upper and lower limits of voltage desired, and then solve two equations in two unknowns to determine the values of the fixed resistors in the voltage divider string. Because of heater-cathode potential limitations, the filaments of both the 1625's and the 6AC7 are floated above ground and require separate filament transformers. The 68K resistors across both glow tubes are not necessary for regulation action, but serve to discharge the filter capacitor in the unregulated 1500-volt supply.

It may be noted with apprehension by some that the plate voltage on that little receiving tube can rise to values somewhat higher than that recommended by the manufacturer. My experience has been that this is not harmful, because at this condition the plate current is minimum and the plate dissipation is not exceeded. Electrolysis of the glass at the base of the tube is possible, but has not caused trouble.

Triode-connected 1625's are used here in place of the low-mu triodes such as the 6AS7, because their higher mu requires a smaller voltage swing at the grid to accomplish the desired change in series resistance. Complete data may be had from the tube manuals, but some typical values for a triode connected 1625 are:

$E_g = -150$ v., $E_p = 1000$ v., $I_p = 0.005$ a.
$E_g = 0$ v., $E_p = 100$ v., $I_p = 0.050$ a.
$E_g = 0$ v., $E_p = 160$ v., $I_p = 0.100$ a.

A very good discussion of regulated power supplies may be found in the Bureau of Standards publication, *Handbook of Preferred Circuits*, prepared for the U.S. Navy. It may be ordered from the Superintendent of Documents, U.S. Government Printing Office, Washington 25, D.C. The number of the book is NAVAER 16-1-519, and it costs $1.75. Detailed design data on this and other types of regulated power supplies may be found therein, and if the one percent or so regulation provided in the circuit described above is not good enough for you, regulation of the order of 0.1% may be had if you do not mind getting a little more complicated. ■

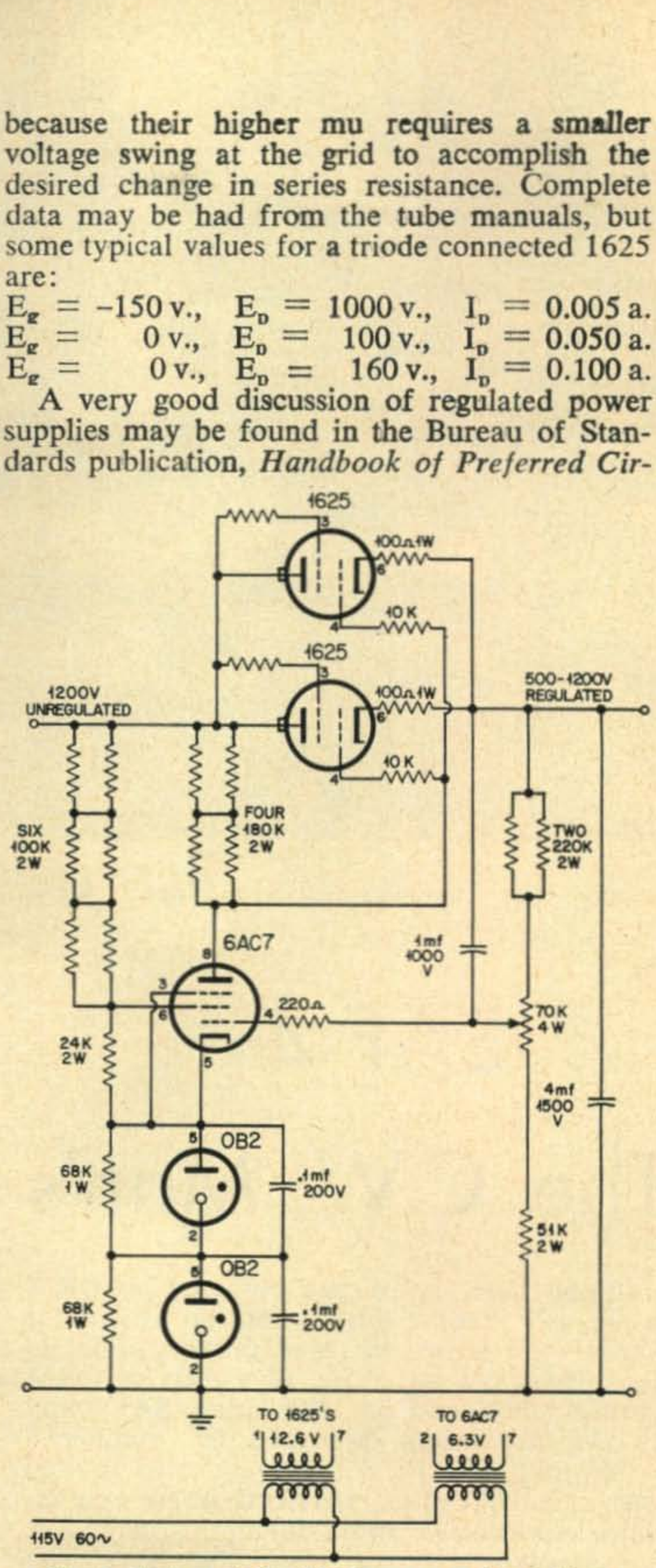

Fig. 1. Value of the 1625 screen grid resistors are 470 ohms, the input voltage should read 1500 volts *not 1200*. The 1625 cathode to 6AC7 grid condenser is .1 *not 1 mf*. The bottom voltage regulator tube is an OA2 *not* OB2.

Regulated Bias Supply

Vernon Trexler W5IUR
2459-A 45th
Los Alamos, New Mexico

A stable bias is needed if you run your linear amplifier class AB2. As the tubes draw grid current the bias supply voltage must not change, the bias supply must present a low impedance to this grid current, otherwise distortion will result. The regulated bias supply is very convenient when you need to set the plate idling current at some specific value in linear operation.

A battery could be used for this service, however if you need to change the voltage for different operating parameters or run your amplifier Class A through C as the need arises, you will need a variable bias supply. Batteries also have a tendency to change in time when used as a bias supply.

Some electronic bias supplies do not have a great enough voltage change to meet the different operating classes when using large tubes such as the 4-250A, etc.

With these requirements in mind, a variable voltage bias supply was developed for a grid current range of 0 to 70 ma and a voltage range of -20 to -120 volts, and an impedance of 4 to 6 ohms presented to the amplifier grid circuit.

The circuit is unique in that it uses small NE-2 neon bulbs to hold various critical voltages constant. A 5651 voltage regulator tube is used because of its higher current rating as compared to a NE-2 in one location in the circuit. The circuit gives the various voltages and currents to expect at different points, and should be self-explanatory.

The 12AX7 is used as a sensing unit to vary the resistance of the 6AS7 so that as the grid current changes the impedance presented by the 6AS7 does not vary, thereby presenting a constant impedance to the grid circuit for varying currents.

The author has used this circuit for almost a year in a pair of 810 modulator tubes and a final rf amplifier using a pair of 4-250A running class A, AB_1 and AB_2 and Class C and has been very pleased with the results.

Other Hams have built the supply and only one problem has presented itself, the four NE-2 in series sometimes do not light properly. If this occurs, substitution of other NE-2's will cure the problem.

Be sure to follow the polarity marking on the schematic for the electrolytics. It is very convenient to bring the potentiometer to set the bias out the front panel of your amplifier. Be sure to shield the leads to this pot.

The power supply for the bias supply is voltage regulated and the current through the two VR tubes is set for 15 ma with the bias supply operating but not in use.

The author is indebted to Dr. Ralph Partridge for assistance on this project.

. . . W5IUR

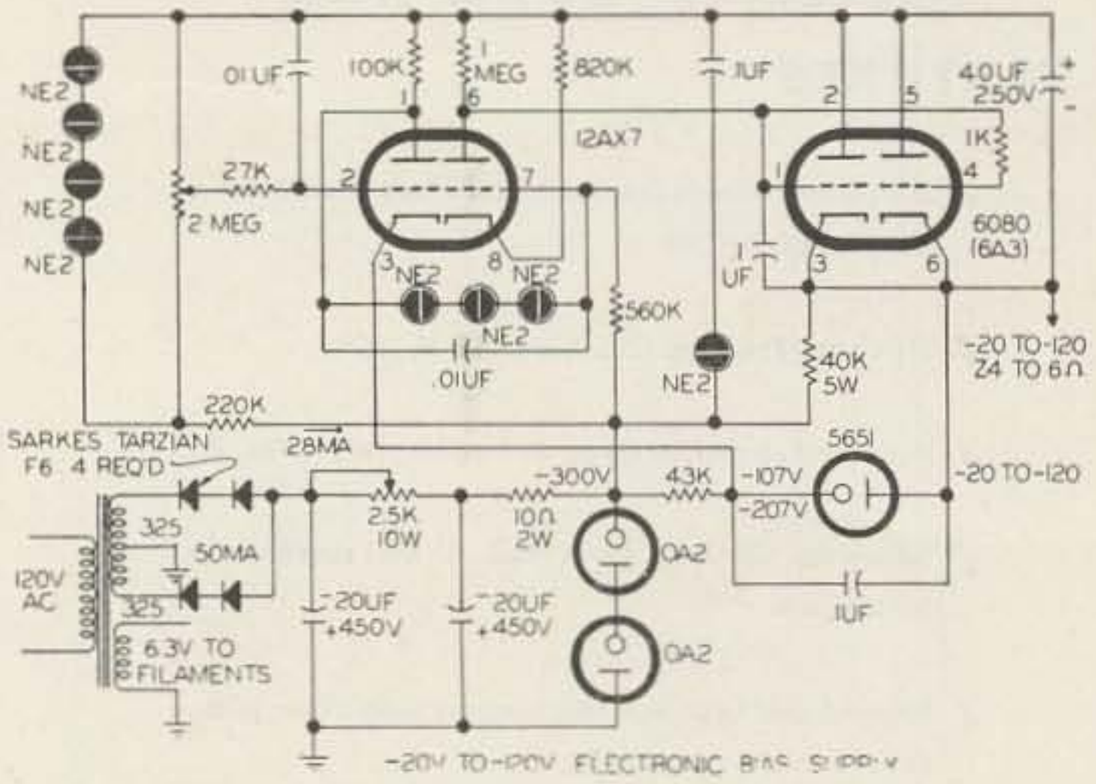

Calls of the Past

Most radio amateurs are familiar with the present system by which the FCC issues radio call letters. For any given district in the 48 contiguous states, the "W" calls are issued from (numeral) AA through (numeral) ZZZ, skipping the letter X, to holders of Extra, Advanced, General, Conditional, and Technician Class licensees. "WN" calls are given to Novice Class licensees. When this series is used up, the FCC shifts to "K" and "KN" and repeats the process. The next step is the "WA" and "WV" series.

It has not always been so simple, though. In past years distinctive calls were issued for now-forgotten special purposes. Did you know that for many years the "Y" block of calls (like W5YJ) was not issued to stations owned by individuals but was reserved for colleges, universities, and other institutions of learning? The "X" block has always been reserved for non-amateur, experimental stations. Until the mid-thirties, "Z" calls were issued only to holders of a "Special Class" station license which authorized additional privileges, usually as to operational frequencies.

Portable and mobile operation required additional station licenses and call letters. "W10" (W ten) calls were issued for aircraft mobile operation in all call districts. Call letters for portable operation outside of your own call area began with the letters "ZZ". This meant that some calls had four letters after the numeral (like W6ZZAJ).

. . . W5EHC

4.6 HIGH CURRENT, SERIES VOLTAGE STABILISER

Operation

The circuit (Fig. 42) can be divided into two main sections.

The first section, comprising V_{2a}, is a shunt regulator, the function of which is to control the screen voltage of the 4X150A regulator valve. The second section, which comprises the remainder of the circuit, is the feedback amplifier.

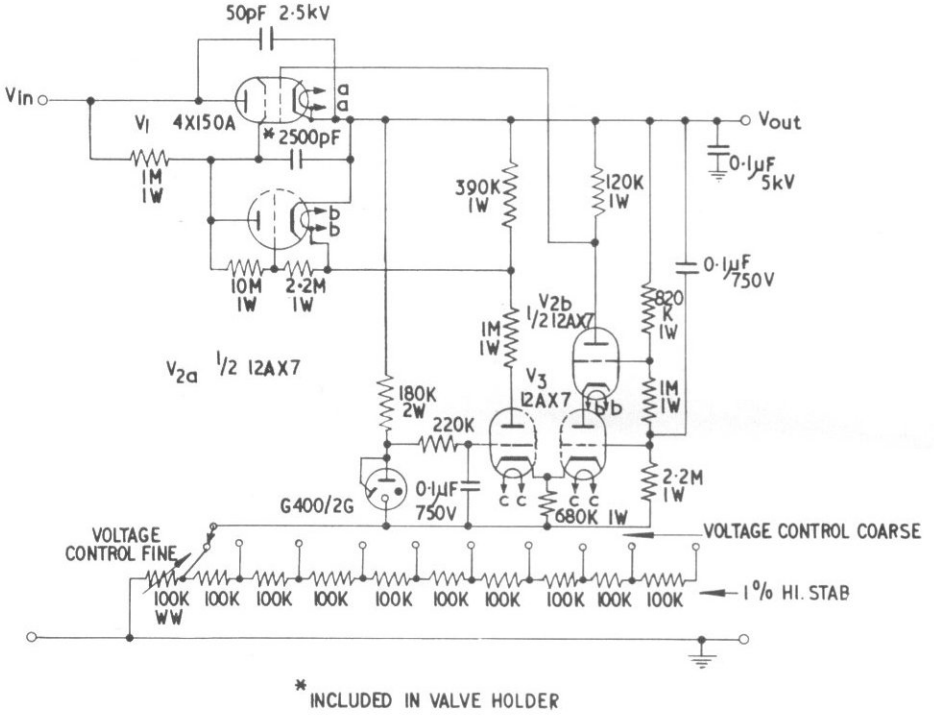

Fig. 42 Series Voltage Stabiliser—Circuit Diagram

The operation of the circuit can be seen more clearly by referring to the simplified diagram (Fig. 43).

By using this circuit, the large anode swing which occurs on the control valve(s) in more conventional circuits, is avoided. Basically the circuit is a cathode coupled, differential amplifier formed by triodes V_{2a} and V_{2b} with a high value fixed cathode resistor R_1 and a variable resistor R_2.

Consider the condition when $R_2 = 0$.

If V_0 tends to rise, the grid voltage of V_{2b} is raised. The anode current of this valve rises but the cathode voltage remains constant, being held near to the stabilised grid voltage of V_{2a} by a fall in anode current of that valve. Thus the anode voltage of V_{2b} falls and the grid of V_1 is driven negative, so compensating for the original change in V_0.

Now consider the effect of increasing R_2 and thus raising the voltage at A.

The voltage across R_1 remains constant, being approximately equal to the stabilised voltage across V_3 : it follows that the current through R_1 must remain constant and the cathodes of V_{2a} and V_{2b} rise in potential by the same amount as point A.

A fall of V_{2b} anode current must occur as long as the potential of its grid remains constant, and therefore its anode voltage must rise.

The cathode of V_1 will follow its grid voltage and thus V_0 will increase.

Stabilisation recurs when the grid-to-cathode voltage of V_{2b} has reached its original value, i.e., when V_0 has risen by the same amount as point A. Accordingly, it will be seen that within quite wide limits the control triodes V_{1a} and V_{1b} always operate under the same conditions, and that the amount by which the output voltage may be raised is limited only by V_{in}.

In the final circuit, arrangements are such that the screen voltage of the series valve rises from 150 volts to 350 volts between no load and full load, and so assists in maintaining constant output voltage.

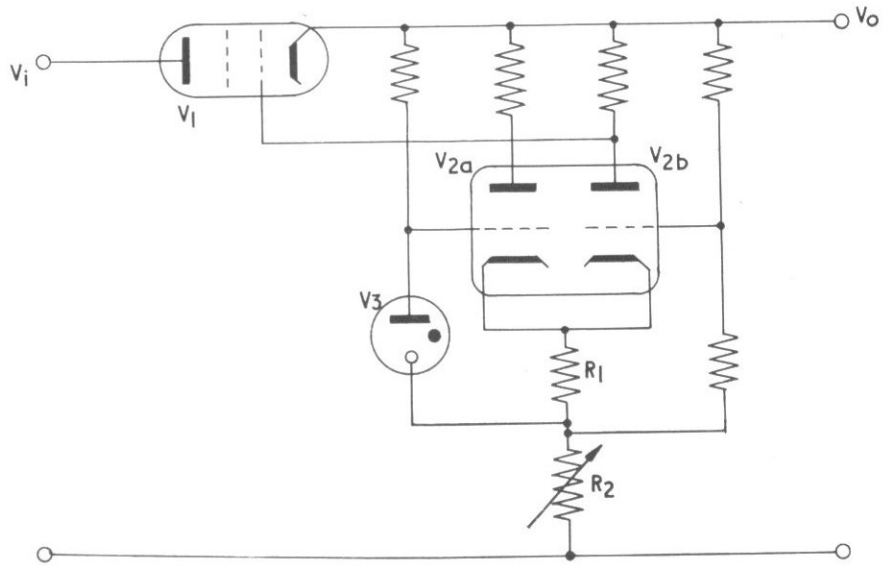

Fig. 43 Series Voltage Stabiliser—Simplified Circuit Diagram

Voltage Range

The range of output voltage from the circuit shown in Fig. 42 is from 600 volts to 2 000 volts. However, by raising the value of the voltage control resistor and the input voltage, the output voltage can be raised to any value. It should be noted that in the event of a fault at the load, the full input voltage will be applied across the series valve.

Hum and Noise

Measured at 1 000 volts, the output hum and noise, off load, was 110 mV peak to peak ; with a 100 mA load, it was 500 mV peak to peak. Under these conditions the peak-to-peak input hum and noise voltages were 12 volts and 100 volts respectively. The hum and noise output did not increase appreciably at loads higher than 100 mA.

Stability against Input Variations

Measured at 1 000 volts no load	±2 volts for input voltage 1·5—3·0 kV

Voltage Stability against Load

Measured at 1 000 volts	±10 volts 0—240 mA

Heating Time

The minimum heating time of 30 seconds should be observed before any high tension voltage is applied.

Input Voltage Range

If a constantly variable output is required, it is necessary to increase the input voltage when the output voltage is increased, so that the drop across the series valve always lies in the range 600 volts to 2 000 volts.

For this circuit it is suggested that the input voltage should be set as follows :—

Output Voltage (Off Load)	*Input Voltage* (Off Load)
600—1 000 V	2 000 V
1 000—1 500 V	2 500 V
1 500—2 000 V	3 000 V

This will allow for a fall of up to 500 volts on the input voltage when the load is applied.

Load Current

A load current of up to 250 mA can be handled whilst the voltage across the series valve is below 1 000 volts. Above this voltage the current is limited in the manner shown in Fig. 44.

Note :—In order to complete the screen decoupling circuit, it is necessary to connect the cathode to the frame of the valve holder. As this point may be at a potential of several thousands of volts, it is clearly necessary to insulate the metalwork of the valve holder from the metalwork of the blower.

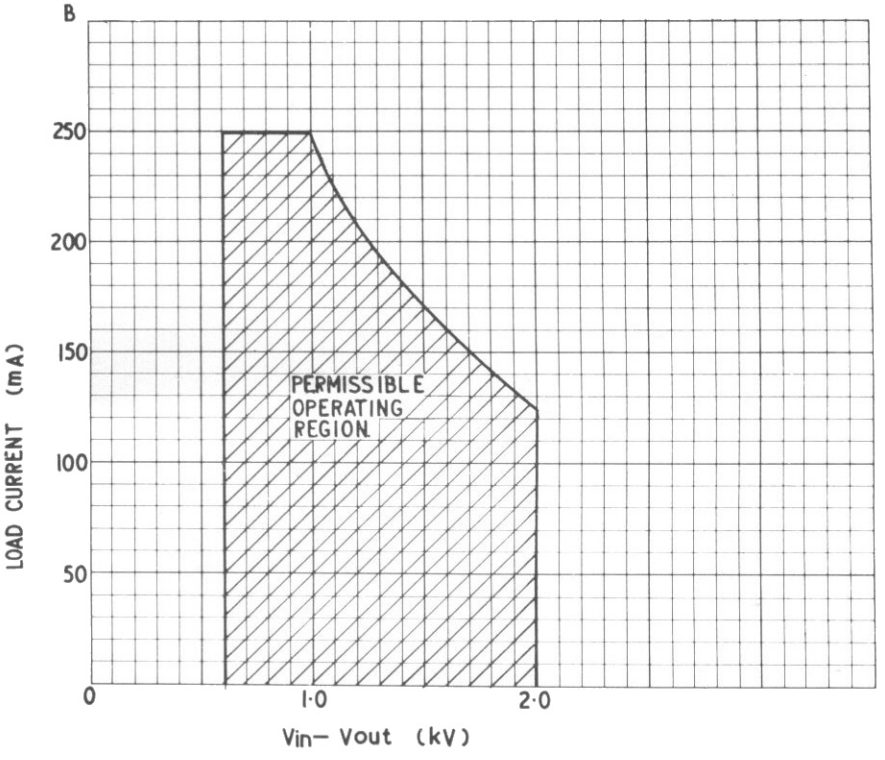

Fig. 44 Series Voltage Stabiliser Boundary Conditions

See-Saw Bleeder

Pat Miller KV4CI
P. O. Box 701
St. Thomas, V. I.

How would you like to save up to ten dollars a year on your ham rig? If you are an active CW ham, the following article will give you some good tip-offs on how to cut the cost of running your rig.

The term "Watts Per Dollar" has been used frequently in construction articles but invariably it has been in reference to the inital cost of the components. Little thought, by radio hams, has been given to the every day consumption of useless watts by their transmitters. The worst offender is the power supply bleeder, frying away and adding useless heat.

Commercial communications companies, with their eyes warily looking at their electric bills, took up this problem a long time ago and came up with what could be called a "See-Saw" bleeder. The design is a simple one and amounts to nothing more than a clamp tube in series with the bleeder which pulls a lot of current under "key-up" conditions and clamps off the bleeder under "key-down" conditions. We radio hams use this device as a source of screen voltage from the HV supply but then blindly proceed to add another bleeder in parallel with the clamp circuit. Such design does nothing but add heat and strain to the power supply.

At KV4CI one of several methods of putting a "See-Saw" bleeder to work was put into action; see Fig. 1. This circuit is a bit fancy as it uses a keyer tube to key the screen of the 4-125A final. However, the same bias that keys the keyer tube is used to unclamp the bleeder clamp tube. Under "key-up" conditions the bias cuts off the keyer tube. Under "key-down" conditions bias is shifted from the keyer tube, allowing it to conduct, and is put on the grid of the bleeder clamp tube cutting off the current in the bleeder. A small plate relay, single pole, double throw, is used to do the keying and steals a few mills from the low voltage power supply.

Fig. 1

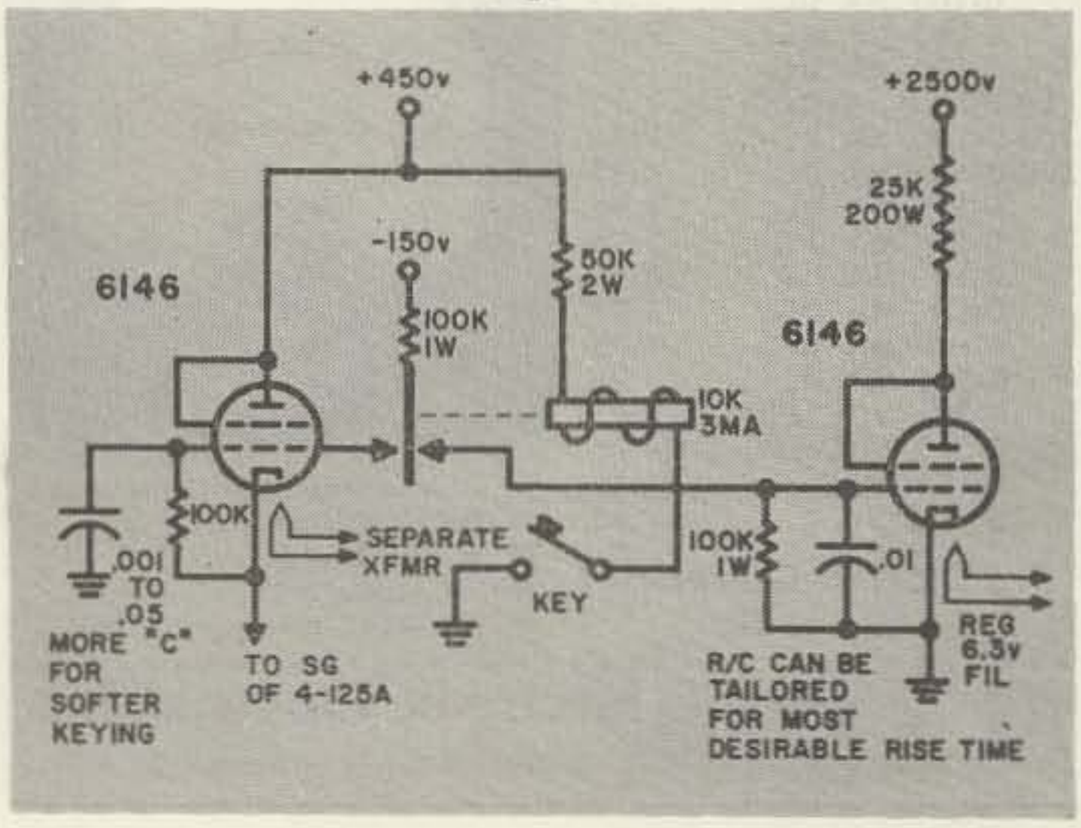

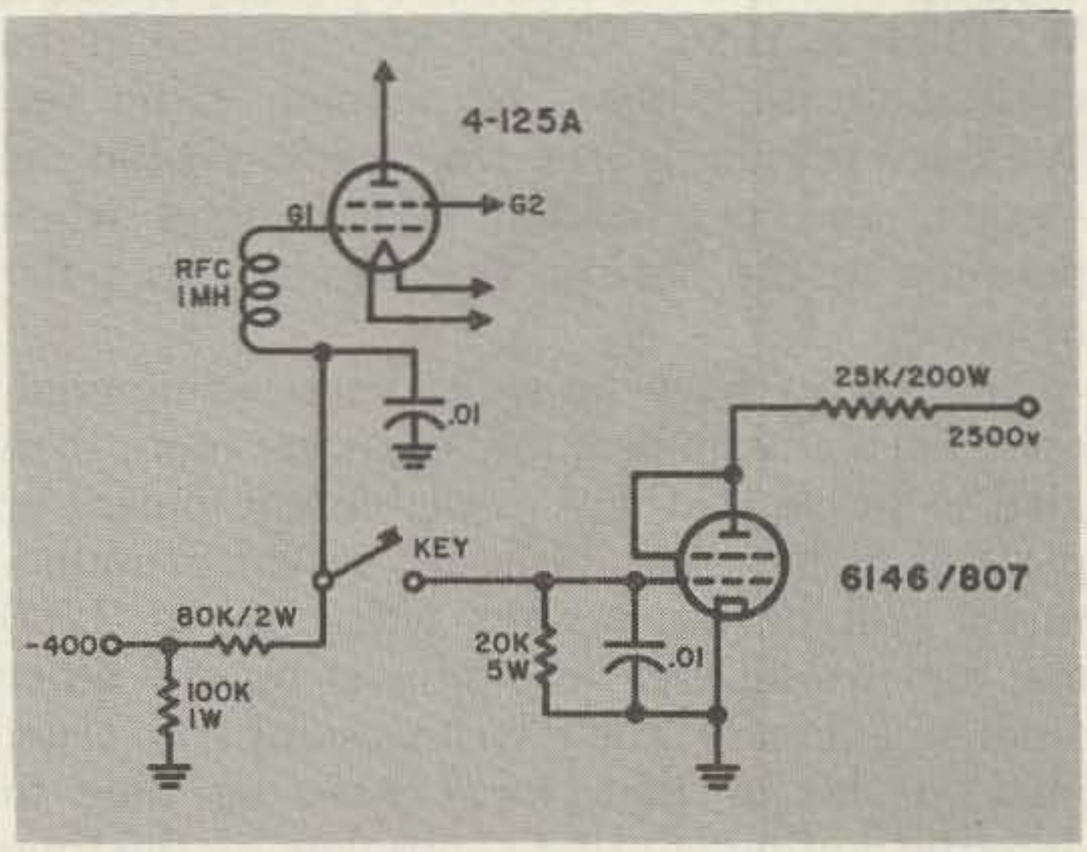

Fig. 2

For those that use grid block keying a suggested circuit is shown in Fig. 2. Here the normal grid leak is inactive under "key-up" conditions, acting only as a grid return for the bleeder clamp tube. Under "key-down" conditions the bias source is practically shorted out leaving only enough protective bias to keep the ampilfier cool if it should accidentally be off-tune. The same left over bias is used to clamp off the bleeder tube.

Fig. 3 is another variation wherein the voltage appearing at the plate of the clamp tube under "key-down" conditions is used to supply the screen voltage to the amplifier. A voltage regulator tube cuts off the screen voltage entirely under "key-up" conditions while a small amount of negative bias is impinged on the screen to assure full cut off. If you project your imagination on your own you can come up with at least a half dozen variations on this theme with one of your own possibly more suited to your circuit design.

(Continued on page 59)

(SEE SAW from page 56)

Not only is this a money saving device, it is also a method which improves the overall voltage regulation on a CW rig. For example at KV4CI the "load-no load" conditions for the 4-125A final were 2400 volts loaded to 250 ma and 2700 volts no load except for regular bleeder. The picture changed dramatically after installing the "See-Saw" bleeder with 2600 volts at 250 ma and 2750 volts under "key-up" conditions. So I enjoy the double bonus of money saved and a couple hundred more volts on the final to help fight the QRM.

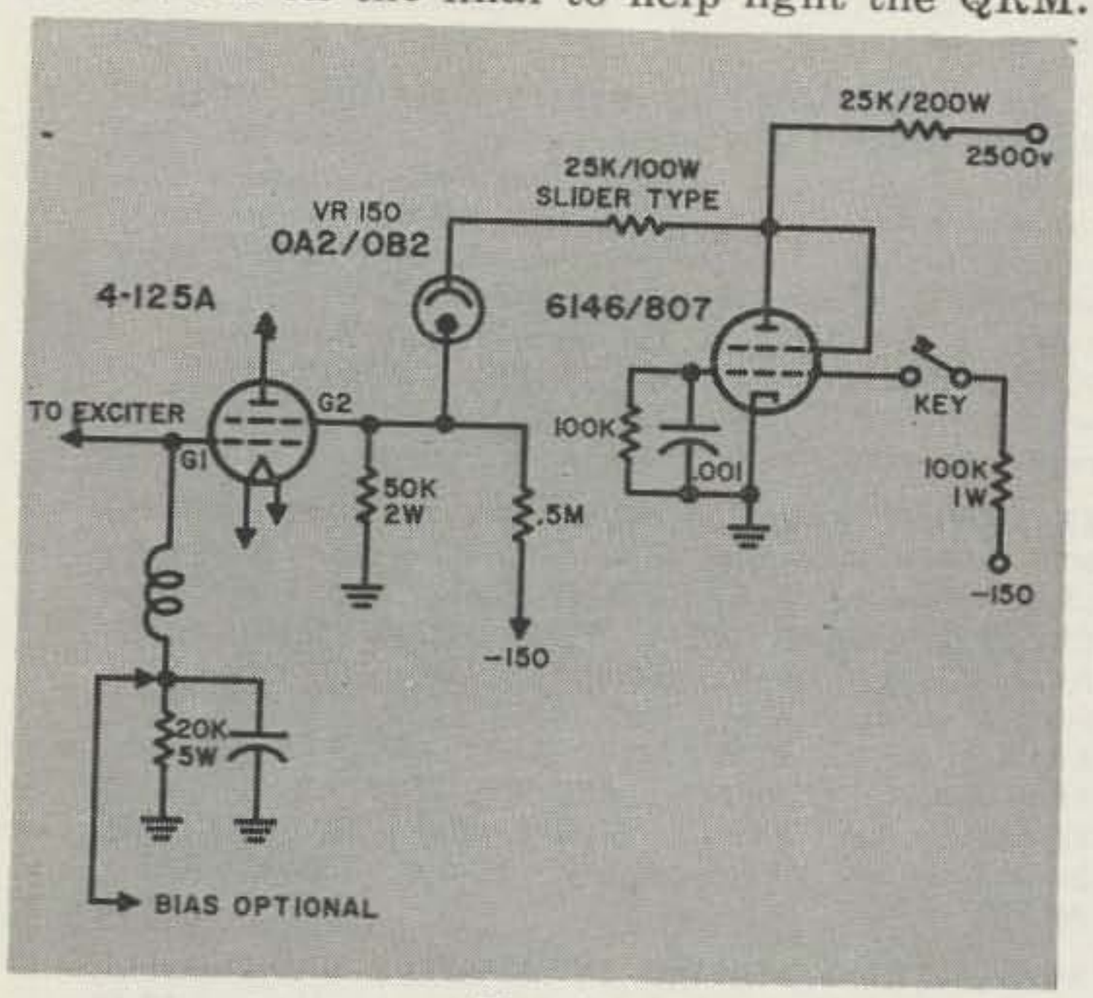

Fig. 3

You will note that 6146's are used in my circuits. I happened to have a half dozen used ones laying around. 807's, 6L6's, 6Y6's, all of them will do the job equally well. 73

(6 and 2 from page 15)

The clipping level is then increased with the clipping control, just above the point where the two bars meet, but do not overlap.

Tests were run on both 6 and 2 meters and the stations worked were asked for a report on signal strength, frequency stability, modulation percent and quality. Results were really great. Stations one hundred miles away and on the other side of 2000 foot mountains were worked with S9 plus signal reports! Most VHF amateurs agree, as I do, that 100 watts on 6 and 2 is almost ideal. Increases in power beyond this point do not result in much improvement, unless the power is increased to 5 or 6 hundred watts. (Oh the TVI!)

I can report TVI from the rig is *very* low. Trouble was experienced on channel two when operating on six meters, but channel two is a fringe area station in my area, being 80 miles away. This was the only channel effected when the rig was properly tuned and matched to the antenna. For a rig which will enable serious work on 6 and 2 meters, you will have to go a long way to beat this combination. 73

PLEASE NOTE

Hams south of Boston, Mass. Bob Graham WIKTJ now has another exclusive amateur store at 1105 North Main Street, Randolph, on Route 28, one mile south of Route 128. Telephone: WO 3-5005.

SURPLUS BUYS

90,000 ft. military observation unit has a sun angle optical system: Contains 16 mm B & H camera taking single frame pictures solenoid driven, 8 day aircraft type chronometer, precision lens and mirror system, compass, barometer, counter. Operates 12 v. Brand New. Perfect for nature industrial, celestial photos. Original govt. packed. f.o.b. Utica, N. Y. or No. Hollywood. (Please specify.) **$35.00—Brand New!**

2-meter mobile coaxial antenna, chrome	$ 5.95
RG-8/U 50-ft. with connectors	2.95
Bulk RG-58/U new	.05/ft.
Bulk RG-8A/U new	.08/ft.
HS-30 headphones 600 ohms	1.39
BC-603 receiver, as is	9.95
2-meter Gonset Communicator	149.00
2-meter Gonset Communicator IV	290.00
6-meter Gonset Linear	89.00
CITI-FONE Citizen's Band Transceiver with 2 sets of crystals	89.95

NEWEST VALLEY DISTRIBUTORS FOR HALLICRAFTERS AND GONSET

We will take anything in trade. We also buy used ham gear.
Harry W6ATC Woody K6BXW

AlvaRadio Div. Standard Electronics
5205 Lankershim Blvd. North Hollywood, Calif.
TRiangle 7-2113

TELETYPEWRITER EQUIPMENT

COLLINS 51J2, 51J3, R-390A/URR Receivers (.50-30.5 MC)
TELETYPE Printers #14, #15, #19, #20, #26, #28.
KLEINSCHMIDT Printers #TT-4A, TT-76, TT-98, TT-99, TT-100, GGC-3.
TELEWRITER Frequency Shift Converter.
For general information & equipment list write:
Tom W1AFN
ALLTRONICS-HOWARD CO.
Box 19, Boston 1, Mass. RIchmond 2-0048

THE MIRACLE IS POSSIBLE • THE IMPOSSIBLE CAN BE DONE
ITS NEW, ITS COMPACT, ITS POWERFUL, ITS LOW IN PRICE

PRICE
$39.95
Net to Amateurs, Complete with Tubes. See Your Dealer.
SEND MONEY ORDER.
Prices Subject to Change without Notice.



TUBE COMPLEMENT
5763 Final Amplifier
6AQ5 Modulator
6U8 Oscillator Multiplier
12AX7 Speech Amplifier

EXCELLO ELECTRONICS PRESENTS
A New Low Price V.H.F. Six Meter Transmitter wired and tested with tubes. The Excello Mark II Six Meter Transmitter is the lowest priced six meter transmitter on the market today. This is not a kit, but a complete unit, ready to put on the air with any power supply supplying 300 v. at 100 m.a.

TRANSMITTER FEATURES
Meter Indicator—Providing monitoring of Final Tuning, Grid Drive and Modulation, at a glance.
Tuning Controls—Tuning Controls are all on the Front Panel.
Access to Components—Removable Enclosure gives access to all Components.
T.V.I. Suppression—T.V.I. Suppression is accomplished by shielding and design.
Compact Size—Complete size of unit is 4"x5"x6" making it one of the Smallest Six Meter Xmitters available.
Low Power Consumption—250-300 v. at 75 m.a. 10 Watts on the Antenna.

Excello Electronics Co.
196-10 116th AVE., ST. ALBANS 12, L. I., NEW YORK
LAurelton 8-3804

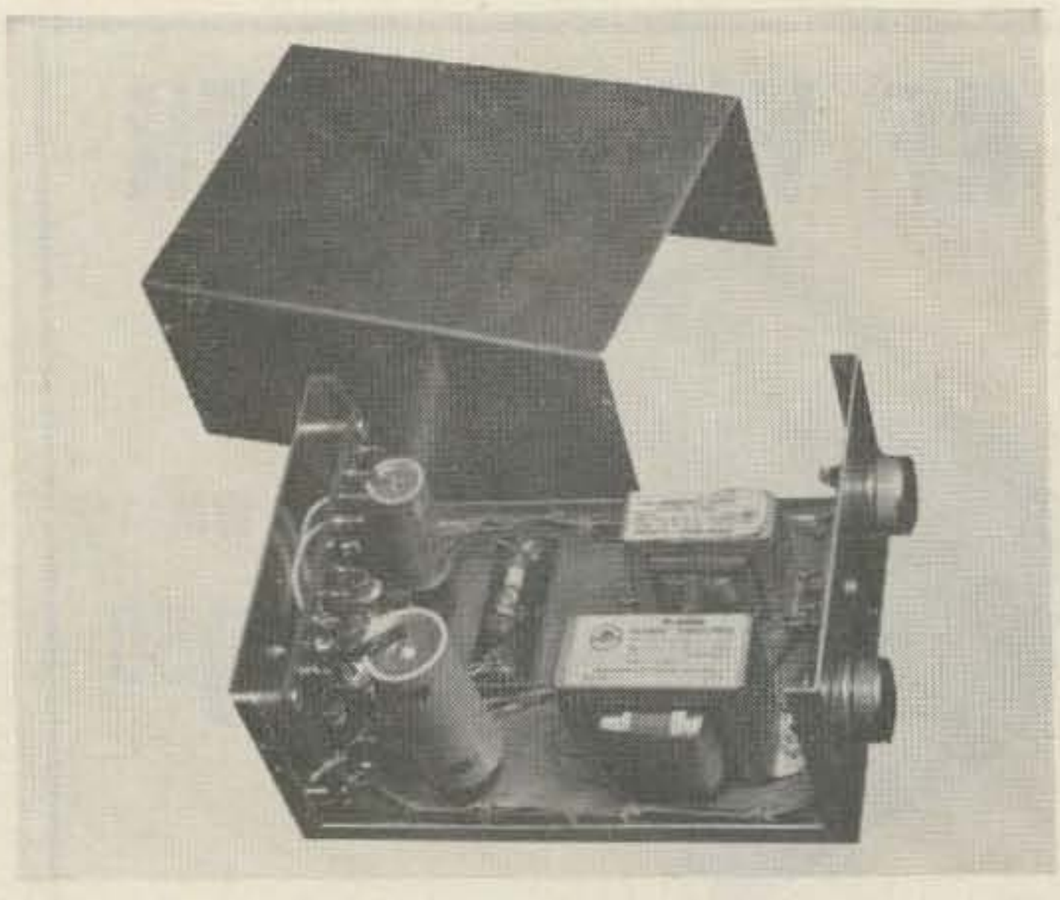

Austin C. Farrell W2BXE
27 Heath Road
Fishkill, New York

Mobile Power Converter

THE transistor power converter is the latest development in a long line of power supplies for mobile operation. The vibrator supply, long used, is often in need of a new vibrator. The dynamotor is a bulky supply and expensive, unless bought surplus. The transistor converter eliminates moving parts, is more efficient, and much smaller than any previous type supply. One thing has made it lack full acceptance by the amateur—that is cost. This supply is an answer to that problem by its use of easy to obtain filament transformers.

The circuit (Fig. 1) is not the design of the author but has been used by many hams in the Poughkeepsie, N. Y. area. Two 6.3 volt filament transformers are used; one as a power transformer and one as the feedback transformer. The basic circuit is a multivibrator. One transistor is cut off while the other is conducting. The collector current of the conducting transistor passes through half of the 6.3 volt winding of the transformer T-1 similar to the operation of the standard vibrator circuit. The primary of this transformer steps the voltage up to a large value. This induced voltage is rectified by the solid-state diode-bridge circuit and filtered by condenser C2.

The feedback transformer (T2) steps the high voltage ac down to a low level for drive to the bases of the transistors. Q-1 is driven to cut off when Q2 is driven to saturation and vice-versa. Resistors R1 and R2 sets the operating bias.

The transformers used are not ideal for the job as the normal operating frequency is about 400 cycles and the core material should be square loop material. However, the circuit as described is quite practical. It may be worth while to experiment with 400 cycle transformers if you have some available.

A 1.2 ampere filament transformer was used for the feedback transformer (T2) because it was readily available. Any size, smaller or larger will do. Nothing is gained using a larger one as little power is required. The step-up transformer (T1) is a 6.3 volt, 3 ampere filament transformer. A higher current transformer can be used, giving slightly higher voltage and more power. You are cautioned, however, to use good heat sinks on the transistors and check for excess temperature. There is little impedance in the low voltage windings to limit collector current to a safe value. Some experimenting was done with other transformers, but the 3 ampere

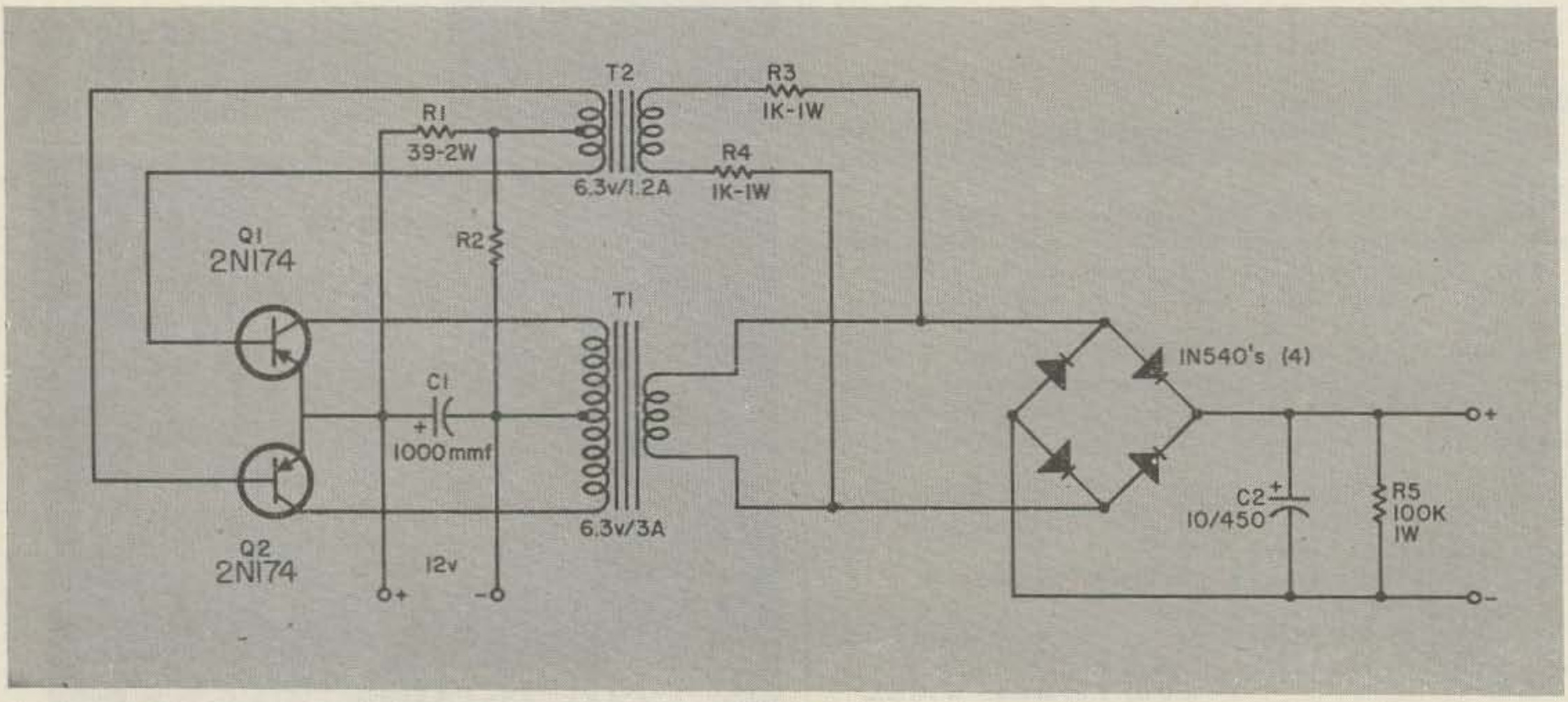

Fig. 1

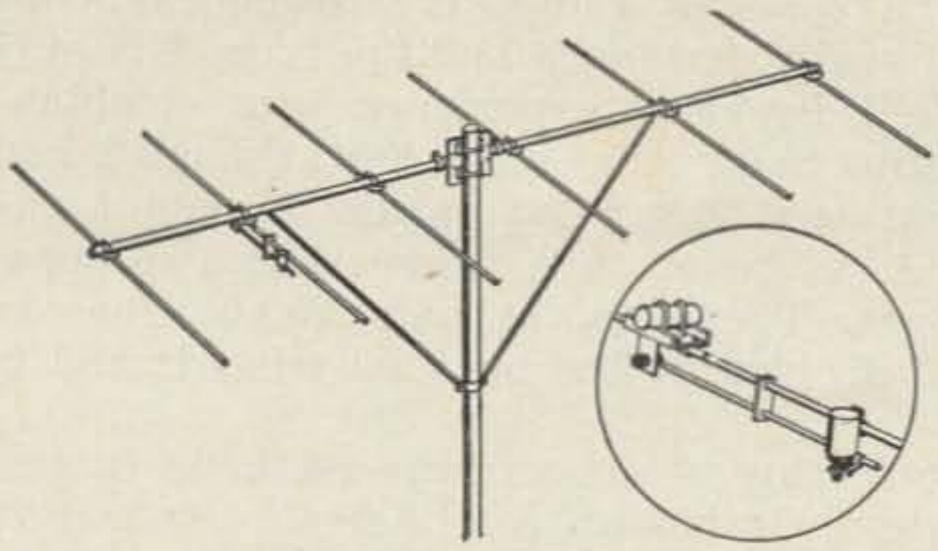

SPECIFICATIONS MODEL LJ-6

Design Center	50.5 MC
Gain	13 DB
F/B Ratio	23 DB
V.S.W.R.	1:1, less than 1.5:1 within 2 MC
Horz. Beam Width	45° (½ power points)
Impedance	any standard co-axial cable
Overall length	21'-6"
Net Weight	15 lbs.
Shipping Weight	20 lbs.

Long John Antenna for 6 Meters

$34.95

FEATURES

Designed for maximum forward gain.
Gamma Match for co-ax feeder.
Finest grade aluminum tubing.
Exceptionally strong since there are no drilled holes.
All aluminum construction eliminates electrolysis.
Entire beam and supports can be grounded for lightning protection.

We are proud of this new Long John Antenna. We've tried to put in every feature you could want. The result is a reasonable cost high gain beam which can easily be put up and which will stay there practically forever. It has a wide enough lobe so you don't have to swing it around all the time, yet gives you tremendous gain where you want it.

AT YOUR DISTRIBUTORS OR WRITE DIRECT

HI-PAR PRODUCTS CO. ◆ FITCHBURG, MASS.

transformer seemed to be a safer design. It will run warm in normal operation. A 5 volt filament transformer will give higher output voltage but current available will be less to keep within the power ratings.

The waveform of the high voltage ac and the waveform at the transistors (collector-to-collector) should be a square wave. There should be no spike on the leading edge of the square wave as this could cause breakdown of the transistor. The purpose of the large filter condenser across the 12 volt supply is to eliminate this spike and to filter out line noise.

Theoretically, the supply should not operate unless the feedback winding to the transistor bases are of the proper phase, but I found that it would work with the wrong phasing at much reduced output. Efficiency is much lower and collector current is high. Also the waveform is closer to a sine wave than a square wave. This condition causes the transistors to remain in the linear portion of their curves for a longer period during each cycle, causing them to overheat. Do not allow this condition to exist. To reverse the phase of the feedback transformer reverse the two primary leads of T2.

The purpose of the resistors in series with the primary of the feedback transformer is to limit the base current into the transistors. Also, if the output of the supply is accidently short-circuited, the feedback current drops to a very low value, causing the circuit to cease oscillation. This provides some protection for the transistors, however the circuit is fused as an additional precaution.

The output of the transformer is rectified by a silicon diode bridge. This eliminates heater current and gives a higher output voltage as there is less drop in the silicon diodes than in tubes.

The circuit is designed for 12 volt operation, however, output starts at a low value of input voltage. The same circuit can be used for six volts input supplying 150 volts at about 100 ma. The chart shows the output voltage versus load for 12 volts input using the components shown in Fig. 1.

Construction

The supply is built in a 3" x 5" x 7" minibox with all components mounted on the cover. All parts are inside except the transistors.

The case of the transistors is the collector terminal and must be insulated from the chassis. A fiber shoulder washer was used under the mounting nut. Sheet mylar was used between the transistor case and the chassis, but mica or other insulating material with good heat transfer may be used. If there is danger of shorting the case of the transistors to ground where the supply is mounted in the car, a perforated cover could be used to protect them and still allow free air circulation. Use an ohmmeter to check each terminal of the transistors for shorts to the chassis before connecting wires to the terminals. By keeping all transistor circuitry above ground it is possible to use the same supply for either a negative or positive grounded battery by grounding the proper terminal.

. . . W2BXE

Input Current at 12 volts	Output Voltage	Output Current	Efficiency
2.4a	400 VDC	26 ma.	34.9%
4.4a	350 VDC	97 ma.	64.2%
5.8a	300 VDC	160 ma.	69.0%

Plate Supply Filters and Keying

By J. C. Coe*

THERE are a number of factors effecting the stability of the signal emitted from a single tube short-wave transmitter operating from the standard 110-volt, 60-cycle power supply. A filter system may look fine on paper, and surely capable of delivering practically pure d.c., but just try keying it once. No matter how carefully the oscillator may be constructed and adjusted the signal may sound "chirpy," or the dashes may have long "tails" if the filter is not right. High voltage surges may cause the tank condenser shunting the plate coil to break down when the key is closed or opened — or both. At least they may cause bad key clicks. The method of keying and the filter used are of great importance, and are interlocked. The manner in which a given set of chokes and condensers is arranged effects not only the note as far as smoothing action is concerned, but also its steadiness, and to a large extent the value of the rectified voltage available to the plate. It is the writer's conviction that in the filter lies the root of much evil.

Different types of oscillator circuits were used so the following remarks are intended to be general, applying to any oscillator circuit, and the conclusions reached are the result of considerable experimenting, the results of which were incorporated in two types of transmitters built by the Signal Corps, the 8-TR-3, using one or two 50-watt tubes in parallel, and the 8-TR-4 using a single 250-watt tube. The wavelengths covered are from 32 to 75 meters, depending upon the coils used. No attempt was made to obtain a "pure" d.c. note, but one steady and sufficiently smooth for the purpose was the result. Government business has been handled over a number of each type of set for a considerable period of time, and each has required but very little attention.

In each case two UX-866 rectifier tubes were used. Although the inverse peak plate voltage in the 8-TR-4 is a little more than the 5000 volts specified, tube life has been excellent. Fig. 1 shows the filter adopted, and this, in the opinion of the writer, is the minimum upon which the amateur should build. Another section might well be added. For the 50-watt tubes, C_1 was 2 μfd. and C_2 .6 μfd. For the 250-watt tube, C_1 was .5 μfd. and C_2 .5 μfd. with a 30-henry choke between in each case. The reason for the different values of capacity will be covered in the latter paragraphs of this article. Both types of sets were wired to be keyed in the primary of the power transformer.

* Assistant Radio Engineer, Signal Corps, Box 151, Fort Sam Houston, Texas.

KEYING

Keying in the grid was found to be least desirable especially with the 250-watt tubes, because of the high surge potentials appearing across the tank condenser. If the plate supply is 2000 volts pure d.c. and the grid potential is 350 volts below the filament during oscillation, with the key up this value of grid bias will be-

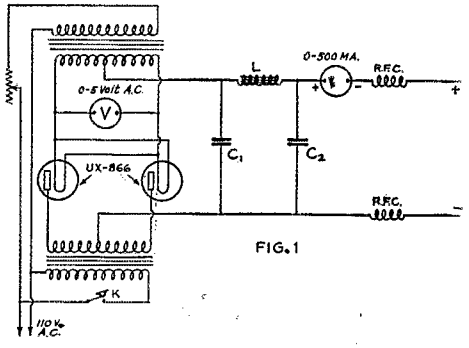

FIG. 1

come much greater, thereby blocking oscillations. In other words, the grid potential is 2350 volts below that of the plate while oscillations are taking place, but when the tube is inoperative this necessarily becomes a much higher value. In fact, the grid may assume such a high negative potential that some conduction manages to take place by leakage, thereby momentarily reducing the grid potential. This is accompanied by a slight rise in plate current. This process repeats itself. In some instances the plate current rises and falls so slowly that the pulsations may be counted, and again they may occur as frequently as 100 times per second. In any event this is the cause of considerable noise, because the plate current each time reaches a sufficiently high value for oscillations of a sort to take place. A resistance placed across the key is the only means of preventing this, but then a weak signal is sent out continuously, which is not desirable. The above mentioned fluctuations in plate current with the key up cannot occur with the key in the center tap, as in Fig. 2, because both plate and grid circuits are broken.

SURGES

With grid or center tap keying, the full plate voltage is always upon the plate of the tube. In

fact when the key is opened this voltage may increase considerably. With keying, the plate voltage is shifted from one high value to a higher value. Each filter condenser must discharge to just the extent by which its voltage is lowered when the key is depressed, and must assume an additional charge as the voltage builds up when the key is opened. If the voltage across a 1-μfd. condenser varies between 2000 and 1800, then .02 joules must be released or taken on when the voltage drops or rises again. The figure, .02, is obtained by the formula:

$$W = \frac{C(E_1 - E_2)^2}{2}$$

or

$$W = \frac{(.000001)(2000-1800)^2}{2} = .02$$

Where W = energy in joules.
C = capacity in farads.
E_1 = higher voltage.
E_2 = lower voltage.

This may not appear to be much energy, but it is equal to the total energy stored in an inductance of 10 henries carrying 63 milliam eres as may be seen from the formula:

$$W = \frac{L(I)^2}{2} \text{ or } W = \frac{10(.063)^2}{2} = .02$$

Where W = energy in joules.
L = inductance in henries.
I = current in amperes.

In like manner the current in the inductance must change, and energy transfers take place on each make and break, each causing a considerable

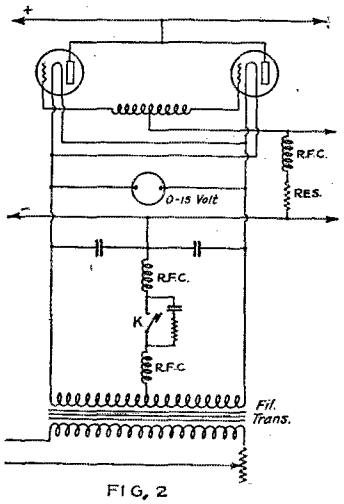

FIG. 2

shock to the system. Thump filters are of considerable use in reducing these effects.

Keying in the primary of the transformer supplying the plate power subjects the system less to surges because the voltage on the output side of the filter rises gradually, comparatively speaking, since the current must build up in the transformer windings, and the inductance of the windings retards the rate of increase. Much of this initial inflow of energy is used to charge the various condensers of the system, and as they become charged there is a greater proportion available to the tube, all of which tends to give a more gradual rise in oscillations than in the methods previously discussed.

On the instant of breaking the primary circuit all the energy stored in the filter units must be dissipated. Since the rectifier tubes will not pass inverse currents unless subjected to enormous potentials, the stored energy must spend itself otherwise, as in driving plate current through the tube. If C_1 and C_2, Fig. 1, are each 2 μfd. and a 12-henry choke is used, there will be a total of 8 joules stored in the condensers at 2000 volts, and only .24 joules will be stored in the choke coil at 200 mils. The result is that current will flow in the plate circuit for a considerable period of time after the contacts have opened, and current has ceased to flow in the transformer windings. The signal will be decidedly chirpy, and the dashes will have long tails. Even with C_2 reduced to .5 μfd. there is some fluctuation noticeable at 2000 volts, but at 1000 volts the note is steady. The reason is that at 1000 volts a given condenser can store only one-fourth as much energy as at 2000 volts. A .5-μfd. condenser will store just as much energy at 2000 volts as a 2-μfd. condenser at 1000 volts. The use of a resistance across the high voltage in order to absorb surplus energy was not found practicable as it must consume altogether too much current to be of any help, and it is objectionable because of the drop this additional current causes in the series choke coil. A larger choke coil was found desirable since its energy storage is more nearly comparable to that stored in the condensers. Furthermore, if C_1 is too large the rectifier tubes may be overloaded.[1] A d.c. milliammeter placed in the plate circuit of a rectifier tube will indicate the average current over the entire cycle, so this must be considered in determining the peak value during the conducting period.

FILTER REGULATION

In many filters the variation in voltage across the plate from no load to full load (when keying in the grid or in the center tap) is very large. Regardless of the method of keying used, an improper arrangement of filter units results in a rather low d.c. voltage available to the tube. Many times this is blamed on the ohmic resistance of the choke coils; it is often only a minor cause.

(Continued on page 74)

[1] This is particularly important in connection with the use of mercury-vapor type rectifier tubes since the initial surge into a large filter condenser connected across the rectifier output may cause the peak current rating of the tubes to be exceeded.

90 J

of La Grange, Ill., says:

New Super Wasp AC Short Wave Receiver

Is a Wow!

Got 5SW Phone Broadcast first night in operation. Comes in kit form or completely constructed.

1930 Ham-Book FREE

Everything for Hams. Crystals and Crystal Holders. 3000 volt new type R3 Recto bulbs ($10.00). If it's good, we've got it!

Send today for your free copy

Chicago Radio Apparatus Co.
Dept. Q
415 S. Dearborn Street Chicago, Ill.

The NEW Martin

VIBROPLEX No. 6

Reg. Trade Marks: Vibroplex; Bug; Lightning Bug

In Attractive Colors *Blue* *Green* *Red*

The smoothest, easiest-working bug on the market. 10 New Features. Fast or slow speed. A great bug for amateurs.

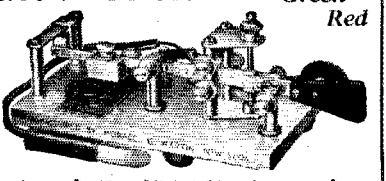

Black or Colored.....**$17** Nickel-Plated.....**$19**

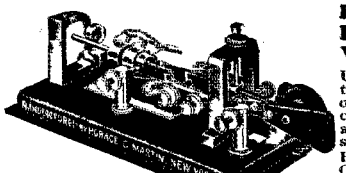

Famous Improved VIBROPLEX

Used by tens of thousands of operators because of its ease and perfection of sending.

Black or Colored.... **$17**
Nickel-Plated..... **$19**

Special Radio Model Extra Large, Specially Constructed Contact Points for direct use without relay. Black or Colored..... **$25**

Your old Vibroplex accepted as part payment
Remit by Money Order or registered mail

THE VIBROPLEX COMPANY, Inc.
825 Broadway, New York City
Cable Address: "VIBROPLEX" New York

the binding posts on the terminal strip which is mounted on two U-shaped pieces bolted to the core. The secondary should also be taped and the whole transformer given a good coating of insulating paint. This improves the appearance and gives better insulation.

Using the two 1500-turn coils only, the plate winding delivers about 375 volts each side of the center-tap to a full-wave rectifier. The entire secondary winding delivers about 685 volts each side. The lower voltage is the only one which has been used so far, the rectifier being either a UX-280 or a pair of UX-201-A's in a full wave circuit. The transmitter is operated on 14,000 kc. (20 meters) and uses two UX-210's. Two out of three reports are "pure d.c." or "xtal", and the UX-201-A's deliver just as much plate current (70 milliamperes) to the transmitting tubes as the UX-280 does.

For a filament center-tap, two 10-watt, 110-volt lamps are connected in series across the filament winding with the center tap connection to their mid-point. This arrangement has been giving f.b. service.

A high-resistance "bleeder" across the output of the filter is used and recommended. It saves filter condensers and discharges the filter when the set is shut down.

The honeycomb coil type of secondary might be used for higher voltage secondaries (if the current required by the transmitter is not too great). The dope for transformer design will be found in the Handbook.

Plate Supply Filters and Keying

(Continued from page 40)

More voltage (average value as read by a d.c. voltmeter) can be supplied to an oscillator tube than the transformer secondary is capable of supplying at practically no load to a high resistance a.c. voltmeter. A filter may be laid out in such a manner that a transformer giving 750 volts a.c. on each side of the center tap may actually deliver 900 volts at 125 milliamperes. Peak values of voltage across the rectifier output may reach much higher values than 750 times 1.41, which helps explain why so many condensers so placed are mysteriously blown. Those same condensers and choke coils can be rearranged so that this same transformer will not be capable of supplying more than 650 volts at 125 mil amps. To explain this consider a simple case.

Take a transformer giving 750 volts effective on each side of center tap at no load and place a good condenser across each half (no rectifier tubes) and measure the voltage. It may be well over 1000 volts effective if the condenser is large enough and good enough. Take a pair of resistances each of which is adjusted to draw the same current as the condensers did, and substitute them in place of the condensers. The voltage now may be 700 volts. A pair of choke coils, each drawing the same current as the condensers or resistors, will show a still lower voltage. The better the time constant, (the L/R ratio) the greater will be the drop. Much the same results are ob-

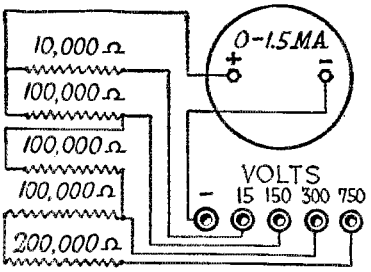

Super AKRA-OHM WIRE WOUND

A Voltage Multiplier

The Super Akra-Ohm wire-wound Resistor is especially adapted for use as a Voltage Multiplier as shown in the above diagram. It is carefully designed to insure an accuracy of 1% and a constant permanency of calibration. Its use is also highly recommended for Laboratory Standards, High Voltage Regulators, Telephone Equipment and Television Amplifiers and Grid and Plate Resistors, etc.

BULLETIN 62 contains the first complete chart for the use of accurate resistors with microammeters and milliammeters. Send for your copy today. There is no obligation.

ALWAYS Super AKRA-OHM ACCURATE — Shallcross Mfg. Company — Accurate NON-INDUCTIVE WIRE WOUND RESISTORS

ELECTRICAL SPECIALTIES
700 PARKER AVENUE
Collingdale, Pa.

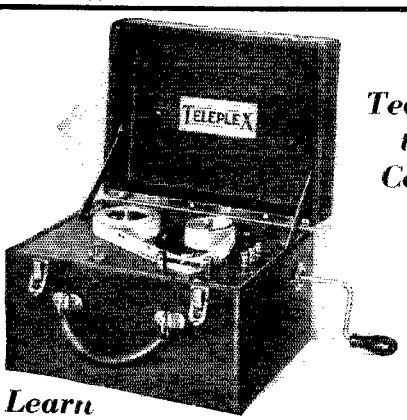

It Teaches the Code!

Learn Telegraphy with TELEPLEX

TELEPLEX is the **practical** code instructor. Works like a phonograph. Waxed tape records send signals like a real operator. Complete code instructions furnished with every Teleplex. Sends messages, radiograms, etc. — regular code traffic like an expert operator. Used by all leading schools. Endorsed by U. S. Navy. **Guaranteed to teach you the code or it costs nothing.** Speedy, simple, clear. Ideal for advanced students or beginners.

FREE 10 DAYS TRIAL!

So sure are we that you will be absolutely satisfied with your purchase, that we will let you try it in your own home ON 10 DAYS FREE TRIAL! You are the sole judge. Where can you match that astounding offer? ACT TO-DAY! Write for full facts about Teleplex. No obligation.

TELEPLEX CO., Dept. N-12, 76 Cortlandt St., New York, N. Y.

tained by using different loads across the output side of a full wave rectifier, as in the latter case the load simply has a tube in series with the active half of the transformer winding. It comes down to this: A capacity of sufficiently high value whose losses are low will actually boost the voltage, but a condenser with considerable leakage and dielectric losses will not be as effective as one of the same capacity of better construction. It is just as important that a good condenser be used as it is that a choke coil of low d.c. resistance be used.

Since C_2 has a choke coil placed between it and the rectifier and therefore has a smoother voltage across its terminals, it is not possible for it to accomplish the same effect upon the final voltage that C_1 is capable of. In fact, it will usually have the opposite effect that C_1 has. A specific case is one in which L, Fig. 1, was 30 henries, C_2 was .5 μfd. and C_1 was removed. The voltage available to a 250-watt tube from a 2000-volt, 1-k.v.a. transformer was only 1650 volts at 190 milliamperes. With C_1 replaced in the circuit and equal to .5 μfd., the plate voltage became 2250 with a plate current of 230 milliamperes to the tube. In the latter case the load presented to the transformer was capacitative and not inductive, and the output into the antenna was 40% greater.

In conclusion, the amount of capacity which can be placed directly across the rectifier output is limited by the current carrying capacity of the rectifier tubes and transformer and by the difficulty they add to keying, and by the fact that a capacity so placed may deliver too much voltage to the oscillator. If C_2 is too large, keying is impaired and the voltage suffers. Large capacitances are worse trouble makers than inductances capable of storing the same amount of energy, due to the high rate of change of current possible in condensers when they first begin to charge or discharge. Because of these facts, the use of more inductance and very little additional capacitance is recommended in amateur filters, regardless of the number of sections.

Official Frequency System

(Continued from page 41)

tained constant. During each transmission by W1XV-W1AXV the integral frequency nearest its exact frequency within 1/100 of 1% will be announced for the benefit of those able to use such accuracy, but for all general amateur purposes the frequency of transmission of both stations may be assumed equal to the figures as herein given. While no responsibility, financial or otherwise, is assumed for the accuracy of these transmissions, every effort will be made to have it exceed the figure given.

Reports on Standard Frequency Transmissions are solicited from all who take advantage of this service. No matter how far from or how near to the transmitting station you may be, your report will be of value to us. Standard blanks which will facilitate your filling out and our handling of the reports are available on request. All such requests and reports should be addressed to: Experiment-

Tunable Hum

Its Cause, Effect and Elimination

By F. S. Dellenbaugh, Jr.*

RECTIFIERS using gas or vapor, such as the Tungar type and the now prevalent mercury vapor tubes of all kinds, frequently cause parasitic oscillations in the associated circuits. These oscillations usually consist of damped waves of uncertain frequency which can be tuned in at various points on the dial of a receiving set, and which frequently interfere with the tune of the transmitter and crawl out along the power supply wires to make general trouble in the neighborhood.

This tunable hum is frequently confused with straight a.c. ripple in the transmitter note. Since it is caused by the same power supply frequency, it will have the same apparent pitch. It can be readily distinguished, however, by anyone who has once heard it. Too little filter produces a low smooth hum which sounds more like an organ note, while tunable hum will have a raw jagged sound very similar to that of old style spark transmitters and of the electric ignition for oil furnaces.

THE FIRST CAUSE OF TUNABLE HUM

Vapor rectifiers require more voltage to start conduction than to keep the current flowing. In other words, a tube may start on 20 to 25 volts but, as soon as it is started, only about 15 volts

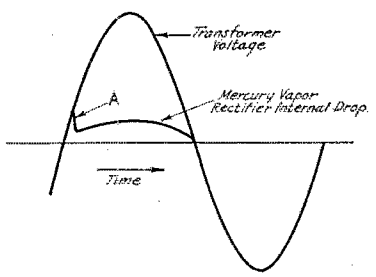

FIG. 1 — INTERNAL DROP IN VAPOR RECTIFIER

Main curve shows transformer voltage. Smaller curve shows internal drop of vapor tube exaggerated. Point A is breakdown of tube where conduction starts. Average internal drop of most commercial mercury vapor tubes is about 15 volts.

drop is required to keep it conducting. Since the rectifier has to operate every half cycle, the sudden change from starting to running voltage drop occurs with twice the supply line frequency. The effect is like negative resistance; and wherever negative resistance is present in a circuit, oscillations are apt to occur. It also can be considered as a sudden release of voltage which is applied to the circuit and causes a small but violent transient surge, which oscillates at various frequencies depending upon the circuit and tube constants.

Fig. 1 shows an exaggerated sketch of the voltage drop across such a rectifier during the conducting half wave. The sudden drop in voltage will be seen at "A." Fig. 2 shows an oscillogram actually taken of one form of tunable hum. This picture was taken with a cathode ray oscillograph. The plate current of one rectifier tube moved the spot in one direction and the output voltage moved the spot in the other direction. Fig. 3 shows an analysis of how this curve is built up. It is a little difficult to interpret, but it illustrates the parasitic oscillations very well. The whole sweep of the curve horizontally from left to right at (a) to (b) occurs in a very small fraction of a second, since the current passing through the tube rises from zero to some definite value in a small fraction of a cycle. The frequency of the oscillations shown in Fig. 2 is about 50 kc. Other oscillograms of similar nature have been obtained with different circuits, showing such oscillations varying from a few thousand cycles to radio frequency, too high to estimate accurately or photograph.

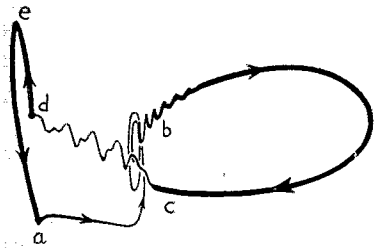

FIG. 2 — OSCILLOGRAM SHOWING PARASITIC OSCILLATIONS CAUSING TUNABLE HUM

Oscillations due to start of tube occur in range (a) to (b). Oscillations due to shut off of tube occur in range (c) to (d). For explanation of curve see Fig. 3. The looping effect and distortion are due to stray fields affecting the oscillograph.

THE SECOND CAUSE OF TUNABLE HUM

With some tubes and some circuits the rectifier tube will suddenly stop conducting when current decreases to a very small value. This is known as "shut off," and the writer knows of several cases

*Delta Mfg. Co., 39 Osborne St., Cambridge, Mass.

in large power supplies where defective tubes exaggerated this effect, causing breakdown of highly insulated transformers. In one case enough voltage was produced to jump across an air gap nearly one inch long, which means 15,000 to 20,000 volts. If current is flowing through an inductance, even a very small current, and the rectifier tube suddenly shuts off, the remaining energy in the inductance *must* be dissipated somewhere. This causes an inductive "kick" in voltage in some part of the circuit and breakdown occurs. In the case just cited there was enough energy present and the tubes were operating so badly that the voltage rose to a destructive point. The same effect may take place in a minor way and small violent transients will occur which oscillate at frequencies, controlled by the circuit constants, which may be in the radio range. This is illustrated by the oscillation from (c) to (d) in Fig. 2.

PREVENTION OF TUNABLE HUM

The best action is to eliminate the hum at the source. A large enough first choke in the filter

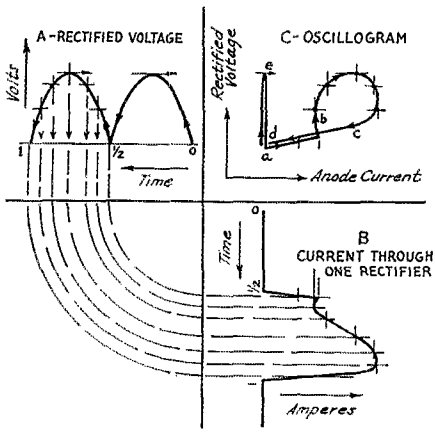

FIG. 3 — CONSTRUCTION ILLUSTRATING OSCILLOGRAM OF FIG. 2

The circuit consists of the usual single-phase full-wave rectifier with two tubes such as Type '66. The output is connected to the customary filter with choke input. The rectified voltage at the terminals of the tubes is shown in A. The rectified current through one tube is shown at B. Both of these values vary with time. The voltage A is connected to oscillograph plates moving the spot vertically in oscillogram C. The current B is run through a coil on the oscillograph which moves the spot magnetically from left to right in oscillogram C. The dotted lines from voltage A through arcs in left-hand corner to current B identify similar points of time. The intersection of current and voltage values occurring at each of these points of time identify points on oscillogram C.

From time "zero" to time "one-half" no current was passed through the rectifier and the oscillogram merely goes up and back again, tracing the curve d–e–a. The rectifier now suddenly breaks down, the current rises rapidly and the oscillogram traces the curve a–b. This is followed by rise of both current and voltage, causing the loop b–c. At this point the rectifier shuts off and the cycle is completed by the line c–d.

The lines a–b and c–d occur in a very small fraction of a cycle. The actual time was approximately 0.0003 seconds.

The parasitic oscillations shown in Fig. 2 have been omitted from this construction for simplicity.

circuit is one of the first major improvements to eliminate this disturbance. If the first choke is above the critical value[1] the current is handed from tube to tube by the choke action and the tube starting voltage is supplied by energy from

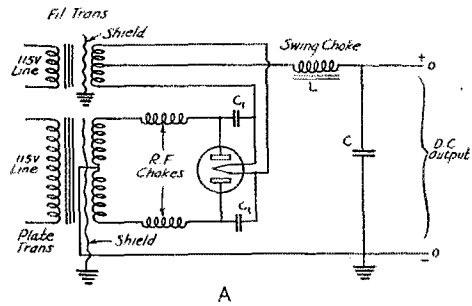

FIG. 4A — SINGLE-PHASE FULL-WAVE RECTIFIER PROTECTED FOR TUNABLE HUM

Input choke of swing type shown at L and buffer condensers shown at C_1–C_1 tend to eliminate this hum. The buffer condensers may be connected to any part of the filament circuit, but short leads connected directly to tube terminals are preferable.

The r.f. chokes must be installed in each plate lead in the bridge and are not as effective if placed in transformer terminals only. Transformer shields should be provided on all filament transformers and the main power transformer.

the choke rather than by power from the transformer. The choke inductance should swing with current drawn so that it is always greater than the critical inductance.

Some tunable hum may still remain, particularly with bridge type rectifiers. The next step is to make another fundamental attack and introduce buffer condensers as shown in Fig. 4. These condensers act like springs. They are charged up during a rise of voltage and, when the tube breaks down, the charge is released through the tube, supplying the current surge necessary during the sudden drop between starting and running voltage. As a rule fairly small condensers will either completely eliminate or very materially reduce any residual hum. This was the old stunt used with B-eliminators employing gaseous rectifiers of the Raytheon type and for low voltages of 150- to 200-volt condensers of 0.1 μfd. were used. Since the energy stored in a condenser increases with the square of the voltage, every time the voltage is doubled the size of condenser can be reduced to one quarter; if the rectified voltage is 1500 to 2000 volts (increased to 10 times), a condenser of about 0.001 μfd. should be satisfactory.

FURTHER CONTROL OF TUNABLE HUM

If an adequate first choke and proper buffer condensers still leave some tunable hum, further steps will prevent it from getting into annoying parts of the circuit. Radio-frequency chokes in

[1] See Dellenbaugh and Quimby articles on chokes and filters, *QST*, Feb., March and April, 1932.

each rectifier anode lead will help materially in this case. Because these chokes deal with the tunable hum frequency and not the transmitter frequency, they must be of considerably larger size than those used in the transmitter circuit. (See Fig. 4.)

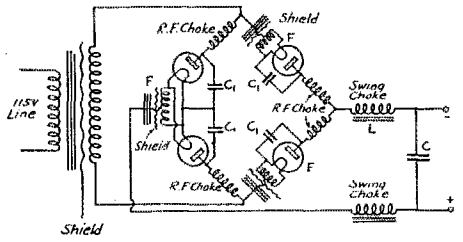

B

FIG. 4B — SINGLE-PHASE BRIDGE-TYPE RECTIFIER PROTECTED FOR TUNABLE HUM

The filter input choke and buffer condensers serve the same purpose as in Fig. 4A. The buffer condensers should be connected directly to the rectifier plate at one end. The other end may be connected to any part of the filament circuit, but again short leads directly to tube terminals are preferable.

The r.f. chokes must be installed in each plate lead in the bridge and are not as effective if placed in transformer terminals only. Transformer shields should be provided on all filament transformers and the main power transformer.

A very important feature which cannot readily be adopted by the amateur, but should be furnished by manufacturers of power supply equipment, consists of a shield between the primary and secondary of all transformers operating the rectifier. This shield should have a separate terminal which can be grounded at the best spot to prevent tunable hum being carried back into the supply line and causing interferences to all other radio sets in the neighborhood, as well as to your own.

Modulating the S.G. R.F. Amplifier

(Continued from page 45)

considered as well as modulation capability. Theoretically there is only one limitation affecting every modulation method, in the case of amplitude modulation. This is the well-known relation that for complete modulation the *peak* modulated r.f. power output rises to four times the unmodulated carrier output. Primarily this maximum power output (modulation peaks) is limited by the type of tube, plate and r.f. excitation voltages employed and is not a characteristic of the modulation method.

In practice, however, in order to operate the modulated r.f. amplifier over the linear portion of the modulation characteristic, the conditions for minimum distortion, a departure from the optimum conditions (from the standpoint of power output) of excitation, bias and plate voltage, becomes necessary with the accompanying reduction in maximum power output. This departure from optimum power conditions is usually greatest in the case of grid modulation methods[2] and least in the case of simultaneous modulation of both screen grid and plate. Because of the very wide variation of output loads, and available excitation in amateur practice, it is practically impossible to predetermine specific limits or the variation in power output resulting with the respective modulation methods.

[2] The tube rating and power output relationship for the case of a grid-modulated triode amplifier has been described by Isberg, "Making Practical Use of Grid-Bias Modulation," *QST*, August, 1932. — EDITOR.

QRR, 1932

(Continued from page 42)

1715 kc. seems to be the best band, with 3500 kc. regarded as second. We add that 56 mc. would ordinarily have possibilities, but might be found too subject to local terrain conditions. Crystal-control is highly desirable, particularly under bad physical conditions, a single tube and a power crystal being adequate. The old familiar TNT or Hartley will perform workably, however, if the antenna is decently tight and steady, and the power supply not too deplorable. High power is not necessary; efficiency is. This means, to repeat, good, workable antenna systems. With that combination, plus a lot of hard work, a modicum of ability, and a little good luck, successful achievement seems assured.

A New Handbook

WE FEEL like celebrating!

As we write this we are just about completing the job of rewriting and reillustrating the Handbook. For three months or more the Hq. staff has been doing work on parts of it — in as much time as could be spared from other duties. For the past few weeks the pressure has been increasing because we had to have it ready January 1st. Now, with a final flourish of midnight oil and strenuous effort, it's ready for the printer's tender ministrations.

The tenth edition of the Radio Amateur's Handbook is done and — well — with pardonable pride — we think it's pretty hot.

We built new gear, took new pictures, wrote new descriptions, condensed here and expanded there, covered all the many changes which have occurred during 1932, tried to bring everything right up to date from stem to stern.

The "10th Edition" comes pretty near to being a whole new book. It must be that momentous changes took place in Amateur Radio in 1932. At least the new Handbook looks it.

Pole Pig Picking

W. S. Baker K2LZF
Box 291, RD #1
Greenfield Center, New York

THE beast we are to consider here has a squat bulky appearance, stubby high voltage snouts, and weighs in like a razorback. Case, oil, and all it runs around one hundred pounds. Contact with this animal when it is excited is not recommended. This is the venerable pole pig transformer used by power companies.

Knowledgable amateurs have been using pole transformers for years in high voltage supplies, but there has been a lack of information which dealt with these cheap sources of B plus thoroughly. In this day of hypersil cores, improved steels, and general miniaturization of transformers, there are those who would assert that the pole pig is obsolete. Maybe so, but it still provides an economical way to high power.

There are two ways to obtain these transformers. Since few power companies are installing new pole transformers with less than a ten k.v.a. rating, the 1½, 3, and 5 k.v.a. models are obsolescent and are gradually being replaced. Method one is to have a friend in the power company who can watch for one of these transformers when they are being replaced. If you can't scrounge one this way, the second method is to meet them at the junk yard. The pigs are seldom shuttled off for use elsewhere, more often they are sold to junkies who burn them to free the laminations from the valuable copper. The latter method has been the most fruitful one used in these woods. Consider that there are several hundred old transformers at the local junk emporium

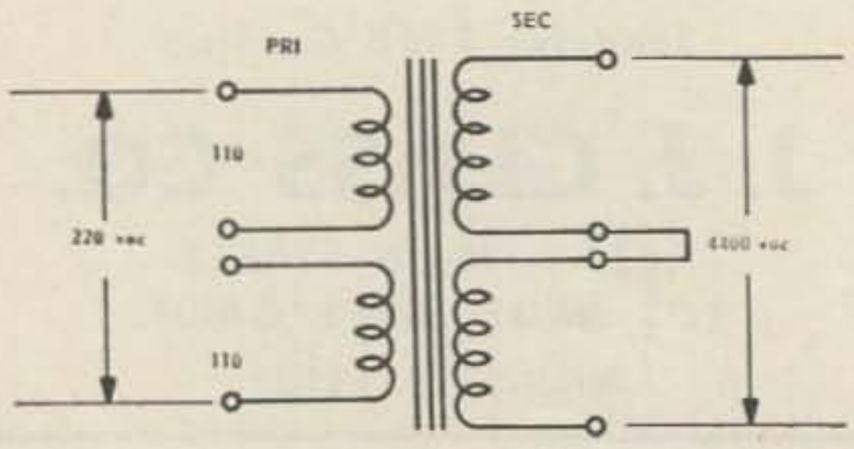

—most of them bad. How to tell a good pig from a bad one?

You are presented with a morass of transformers, some good, some burned out, and of several different ratings. The ratings are marked on the cases: 1½, 3, 5, 10, etc. k.v.a. The 1½ k.v.a. models are rarely found with high voltage center taps, ordinarily they put out 2200 v.a.c. from leg to leg. Even if you used one of these models by bridge rectifying, the regulation would be poor. If you can find only 1½ k.v.a. models, get two, and run the secondaries in series for 2200-0-2200 v.a.c. The 3 or 5 k.a.v. sizes are the ones to look for. They provide a neat, one package, way to go. Pigs larger than 5 k.v.a. have high exciting currents and are difficult to turn on. Besides, they are unnecessarily bulky. Disregard any "bad" markings on the cases, they are frequently misleading. It is a good idea to add your own marking so that when you come back to get another pig, you will not duplicate earlier efforts.

To select a good pig you are going to call into use all your senses. Open the top cover and look in. In a good unit the oil should be reasonably clear. There should not be evidence that the oil has boiled away leaving a charred residue. There will be a rancid, burned out smell and the core will be blackened in a bad pig. The visual definition of good or bad is usually quite clear.

Assuming that you have found a transformer which merits further investigation, look to the electrical characteristics. The high voltage side is supported in ceramic and the low voltage side has leads running directly to feedthrough terminals from the core. Also, the low voltage leads appear to have high current carrying ability. If there are four terminals on the high voltage side, you have a pig that is 4400 volts center-tapped, or 2200-0-2200 vac. The center tap is made by joining the two center terminals. If there is no center tap, only two terminals on the secondary, you would have to bridge rectify the transformer to use it. If the unit is one you can use, begin checking with your trusty VOM which you have brought. There should be no shorts from primary to case, secondary to case, or between windings. The primary should be continuous and show very low resistance. The secondary resistance reading should show the effect of Lenz's Law for inductance, the VOM reading will ooze on due to the high inductance present. The reading should finally rest at 50 to 70 ohms. There is enough inductive energy storage here to see a good sized spark upon discharge. If the pig passes these tests, you are ready to pay for it and take it home. Leave the case and oil behind if you don't want to carry them, they are unnecessary. Contrary to the belief held by some, the oil plays no part in the insulation of the transformer, it is coolant only. At the ratings you

will be running the pig, you will not miss the oil. In several years of supplying a kw with associated bleeders and modulator, I have never even taken the chill off the iron in the beast. With its low secondary impedance, this transformer makes an excellent high voltage source. You will probably pay $2 to $3 per K.V.A., and since the junkies are interested in the copper only, they usually allow the return of any transformers which turn out bad at home. In several years of pig picking, the author has had a hand in locating approximately a dozen transformers. Only one was found to be bad after it was taken from the yard, and this was when one of the aforementioned rules was ignored.

Both primary and secondary are split into two separate windings. The low voltage side, or "primary" as we use it here, should be paralleled for 110 vac operation or seriesed for 220 vac operation. Both connections can give the full secondary voltage, but the 110 volt connection is not advised for high power work. The doubled line current in 110 operation as against 220 operation does not help the regulation of the supply. Proper high power practice dictates the use of 220 volt input. Needless to say, you cannot put 220 volts on the 110 connection for twice the secondary voltage. This would over-excite the primary, and certainly burn up the transformer. Also, the phasing of the input leads must be proper. If the phasing is out, there will be zero voltage developed in the secondary. A safe way to check phasing is to excite the primary with a low value of ac such as could be gotten from a filament transformer. Then check to see if there is voltage in the secondary; if not, reverse the primary leads, and the voltage should appear. Remember this connection for when you install the full line voltage. Remember always that the device you are working with is lethal! You do not have a second chance.

With 220 volt input, a full wave rectifier, and a normal, low resistance filter, the output voltage should be just under 2100 vdc from a supply using a pole pig. A variac running on the 15% over setting will increase the output to almost 2400 vdc. These transformers can be used in many ways. Put 110 vac on the 220 vac connection and use the 1000 volts so derived for the exciter supply. Research here shows that the secondary could even be used as a swinging choke, the value ranging from 9 hy to 3 hy over the current range from .1 amp to 1 amp. One user has gone so far as to employ two pigs back to back to form a kw modulation transformer. The purists may scream, but only one person in ten could tell that the audio system had been changed from a standard modulation transformer, and his comment was that the low frequency response appeared to be better than it had been!

. . . K2LZF

SCR-522 SPECIAL

JANUARY-ONLY SPECIAL! $12.95 BUYS 2-METER RECEIVER & 2/6/10 METER XMTR

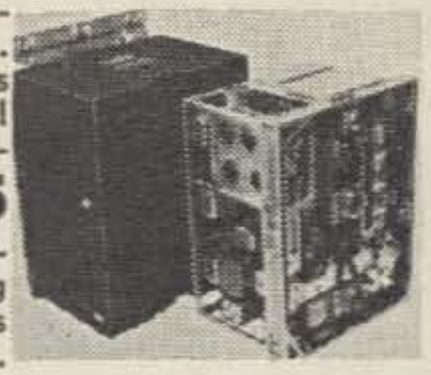

SCR-522 rcvr, xmtr, rack & case, exc. cond. 19 tubes include 832A's. 100-156 mc AM. Satisfaction grtd. Sold at less than the tube cost in surplus! Specify whether fob Bremerton, Wn. or Buffalo, N. Y. Only **$12.95**
Add $3.00 for complete technical data group including original schematics & parts lists, I.F., xtl formulas, instruct. for AC pwr sply, for rcvr continuous tuning, for xmtr 2-meter use, and for putting xmtr on 6 and 10 meters.

POPULAR Q-5'ER

BC-453-B: 190-550 kc; I.F. 85 kc. Use as rcvr, as tunable I.F., as double- conversion for other rcvrs. Checked out, good cond., w/schem., align. instr., pwr sply data, etc. RailEx only, fob Los Angeles **$12.95**

QX-535 RECEIVER

See p. 66 Dec. 73 or write us for reprint. This is the BC-453-B in handsome case with xfrmr-type pwr sply, speaker, all controls, phone jack, ready to plug in and use..... **$37.50**

NAVY'S PRIDE RECEIVER

RBS: 2 to 20 mc 14-tube superhet has voice filter for low noise, ear-saver AGC, etc. Strictly for communications! Very hot! I.F. 1255 kc. Checked, aligned, w/power supply, cords, schematic, instructions, fob Charleston S.C. or Los Angeles, Calif. Only **$99.50**

ALL-BAND RECEIVER

R-45/ARR-7: 0.55 to 43 mc A1, A2, A3. Unused Air Force surplus, cost Gov't $750.00! Includes our own 60 cy pwr sply for htrs, B+, and the DC for the rcvr's automatic tuning motor. This rcvr has everything! Xtl IF filter, 6 selectivities, BFO, S-Meter, AF/RF Gain, Noise Limit., etc. Sharp and Hot! Best buy today for DX. IF is 455 kc, ideal for double conversion with either BC-453 or QX-535 described above. Before shipping, we have a painstaking Communications radioman inspect each unit thoroughly, check it, align it, bypass reradiation suppressor, improve ant. impedance match and hang his OK tag on it. W/schematic, align, data, etc. absolutely ready to plug in and use . . . nothing else to do. FOB San Antonio, Texas..... **$197.50**

RCVR/SPECTRUM ANALYZER

AN/APR-4 rcvr is 11-tube superhet as I.F., S-meter, etc. for the 30 mc output of the tuning units. Aligned, OK, fob Los Angeles... **$69.50**

TN-16, 17, 18 tune 38-1000 mc; checked OK; the set of 3..... **$85.00**

TN-19, 975-2200 mc..... **$59.50**

LM FREQUENCY METER

Good, used cond. With matching calibration book, xtal., schematic, power supply data. F.O.B. Pensacola, Florida. Only..... **$49.50**

SAME, but less calibration book..... **25.00**

AC PWR SUPPLY for TBX & LM

EAO. Made for TBX rcvr, furnishes all required voltages. Input 115 v 60 cy. Brand new, original pack, with spares. With mating output plug, schematic, and conversion data to higher outputs (for example 200 v 40 ma, plus 6.3 v 2 A). FOB San Diego, Calif. **$14.95**
For use with LM freq. meter add $3.00 for "LM pwr kit" which includes LM input plug, revised schematic conversion, and parts needed for the 12 v LM heater requirement.
TIME PAY PLAN available for any purchase over $150.00 total.

R. E. GOODHEART CO.
BOX 1220-GC BEVERLY HILLS, CALIF.

Mercury Rectifier Tests

Paul M. Barton, W6JAT
Jennings Radio
P. O. Box 1278
970 Mc Laughlin Ave.
San Jose 8, Calif.

It has been found that mercury rectifiers, such as 857B, 872, 866, FG-105, etc., can be reliably tested by examining their firing voltage on an oscilloscope.

Light the filaments and allow to warm up *completely*—often many minutes more than is necessary for normal use.

Apply ac voltage across the tube through a suitable current limiting resistor. Increase the current to the rated maximum continuous duty current for the rectifier. A 125 volt supply is quite satisfactory for this. Then put the oscilloscope directly from anode to cathode of the rectifier and observe the waveform.

The most meaningful pattern is seen when the scope is across the rectifier under test.

The sine wave starts to go positive and when it is far enough positive, the tube fires and the scope trace drops back to the DC tube drop. During the inverse half cycle, the negative

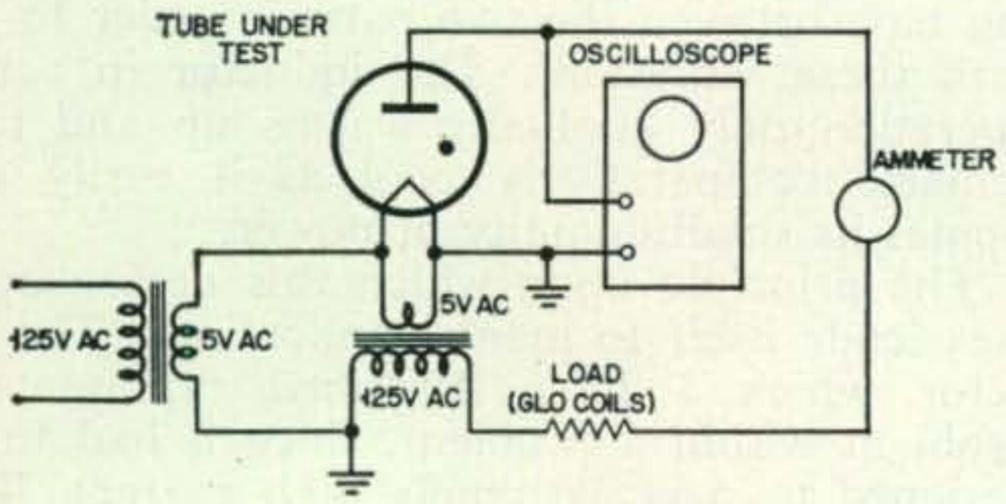

Fig. 1—Set up for observing waveform across the mercury vapor rectifier under test. Note the use of the filament transformer for plate voltage.

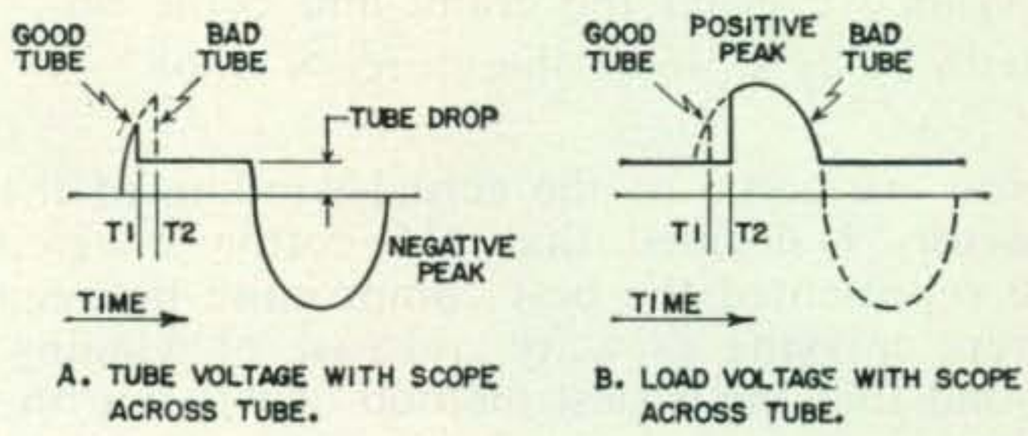

Fig. 2—Waveforms that should be developed across the load and tube. They may be compared with some actual scope waveforms shown on next page.

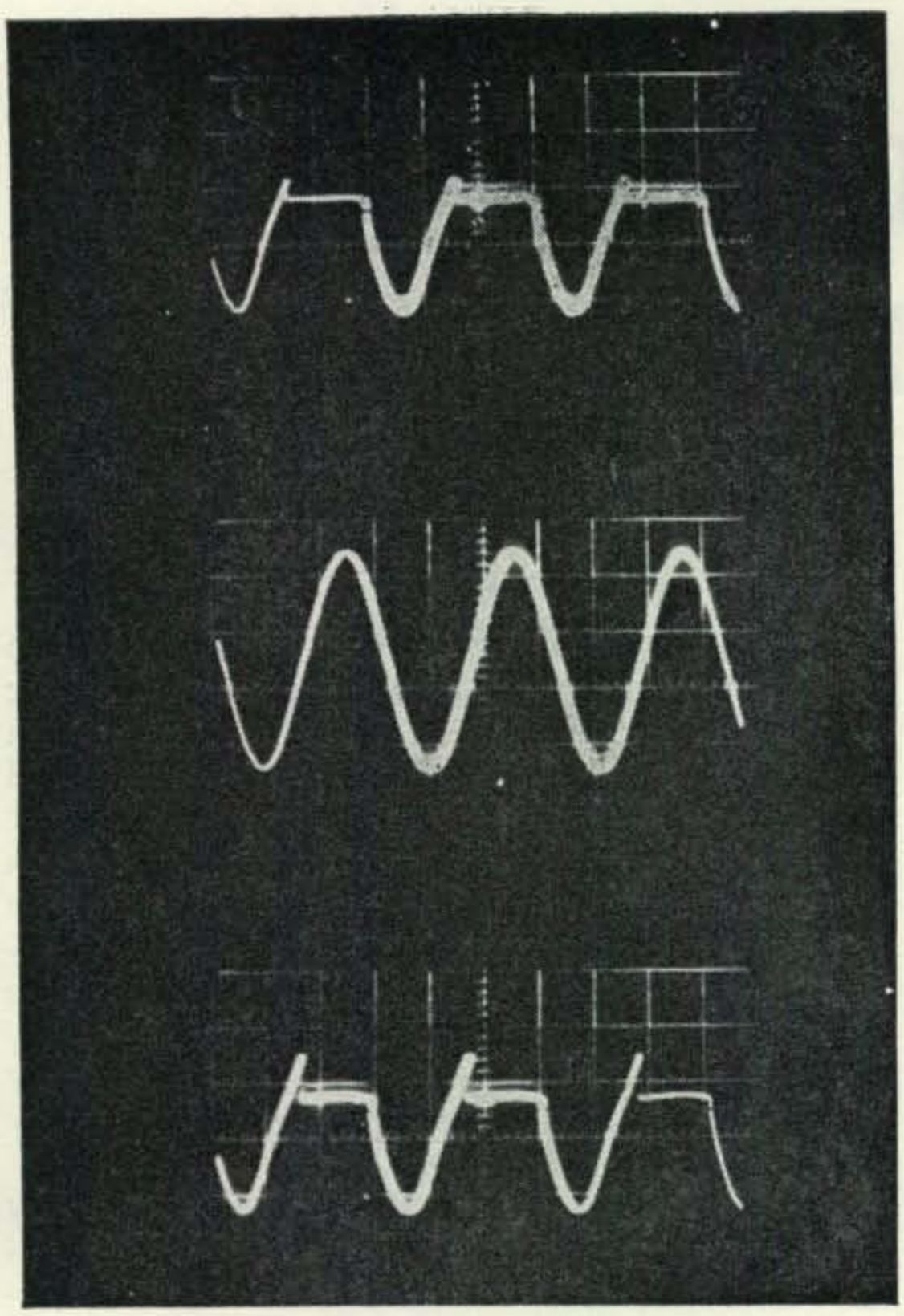

Read from top to bottom

Doubtful tube possibly good

Sine wave for comparison

Definitely bad tube

peak of the sine wave is seen on the trace.

The important point for this test is the height of this spike at the beginning of the positive peak. A "bad" tube will show a higher spike. A good tube will show a small spike.

For a given supply voltage and load resistor, a good tube will indicate a certain (pre-set) current. By comparison in the same setup, a marginal or bad tube will indicate a lower current. Normal variation between good tubes is about 5%. Bad tubes will be from 6% to 10% low with the same set-up.

For a new set-up to conduct this test, use known good and bad tubes for comparison, to become familiar with the size of the trace of the spike or overshoot voltage.

The firing voltage, as indicated by the height of the spike is related to the "hardness" of the tube, which is, in turn, related to its operating peak inverse voltage.

This spike, or overshoot, actually represents an ac component in the dc output of a rectifier system and can be appreciable in some cases.

This test has been used very successfully to detect rectifiers that were likely to "invert" in service. The use of this test has materially reduced power supply breakdowns due to rectifier inversions.

It is important to test (& operate) these tubes *at* rated filament temperature. A low temperature increases the probability of inversion of the rectifier.

Mercury vapor rectifiers, particularly large ones like the 857 B, should, ideally, be brought up to filament temperature slowly. This reduces the likelihood of a drop of mercury getting under the oxide coating and raising the coating.

To prevent damage to the filaments from mercury, stored rectifiers should be brought up to heat for thirty minutes or more at least every 3 weeks. ■

Read from top to bottom

Good tube

Sine wave for comparison

Very bad tube (expanded scope trace)

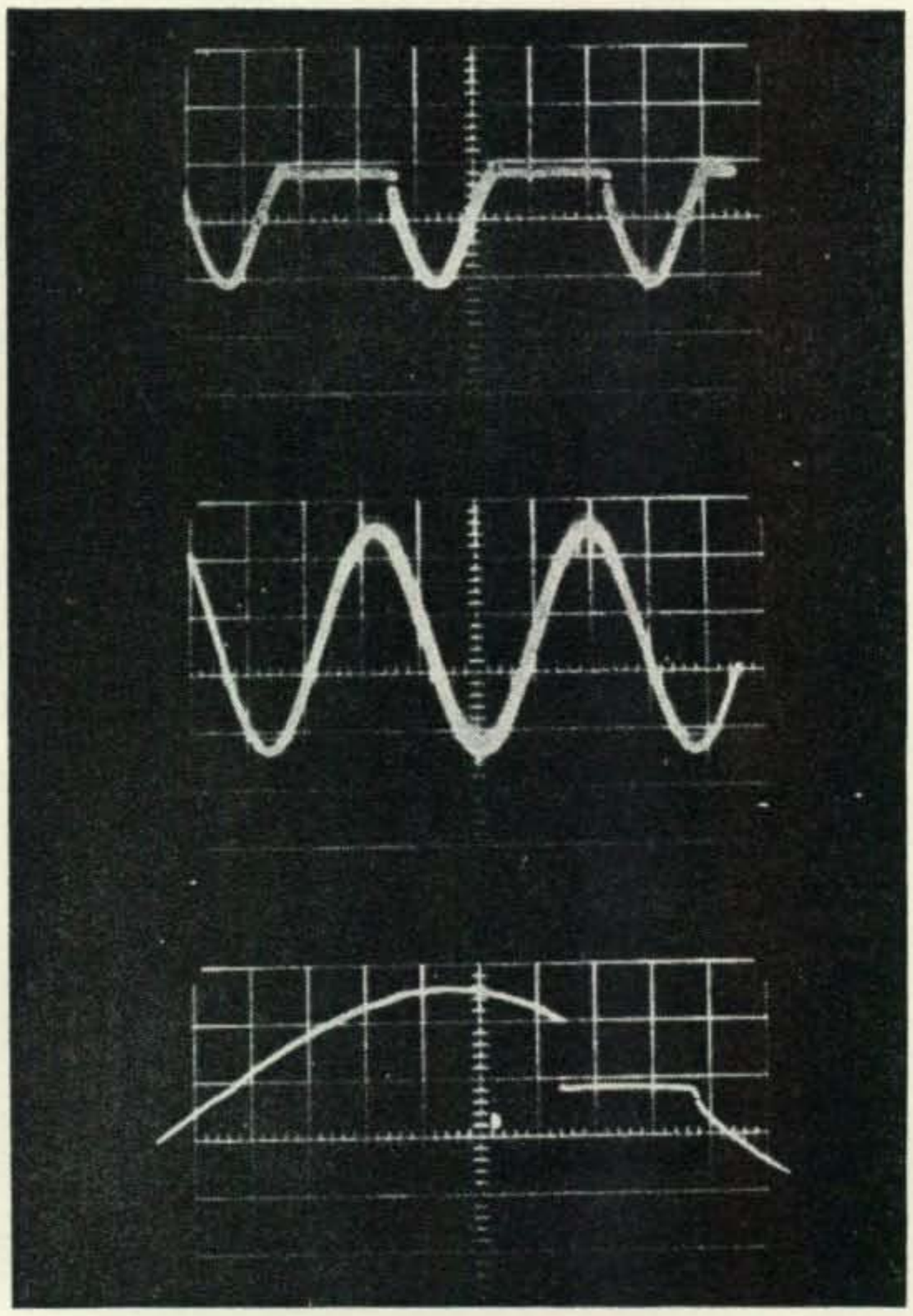

Automatic Overload Protection and Push Button Control

By E. and C. Seiler, W8PK-W2EB *

THE system of automatic overload protection and push-button control to be described was developed as the result of blowing up too many dollars worth of radio equipment during the past few years at W8PK and W2EB. On one occasion back in 1925 we were working a pair of 204-A's in a self-rectified circuit on 20 meters. The tubes were beginning to show signs of weakness under the strain of 2500 volts and the grid wires shorted to the filament. The tubes blew up and so did a perfectly good 2-kva. transformer. At another time a fifty-watter which had had its base removed in 1924 for some 5-meter work (removing bases of tubes was an old Spanish custom in those days) and which had to have a copper tack driven into the glass envelope at the point where the plate lead protruded — yes, the plate lead broke at the point of exit during the process of removing the base — took a deep breath of autumn air through the hole made by the copper tack. The filament wilted — and so did a 750-va. transformer. On still another occasion we blew up four 210's, three milliammeters, a plate transformer and a pair of rectifier tubes. After this loss we started using crude fuses in the high-voltage leads. They were not very satisfactory, however, because it took time for the fuse to burn out and even though the time was but a few seconds, we kept on losing equipment.

Three years ago we decided to put to work a system of control for starting and stopping the transmitter and have it automatically shut off the power supply in the event of an overload. The system is fool-proof throughout and has never missed fire except when the battery went dead. Three relays are required to do the job, as shown schematically in Fig. 1. The 110-volt a.c. relay is a General Electric Type G-2; the other two are Western Electric R-207 and R-699 relays. Two small Yaxley push-buttons are needed, one (start) making contact when pressed, the other (stop) breaking contact when pressed. A 22½-volt "B" battery is used to operate the R-207 relay; since this relay will operate with only one milliampere through the winding the "B" battery lasts at least a year even though the control is used every day. The 60-ohm potentiometer was made by putting a 20-ohm rheostat in series with a fixed 40-ohm resistor.

When the "start" button is pressed the R-207 relay operates, closing the two sets of contacts which are normally open. This causes the relay to lock through one set of its own contacts and through the normally-closed contacts of the R-699 relay. The 110-volt relay operates under control of the second set of contacts on the R-207 relay. The R-207 relay can be released by pressing the "stop" button or by the opening of the contacts on the R-699 relay when an overload occurs.

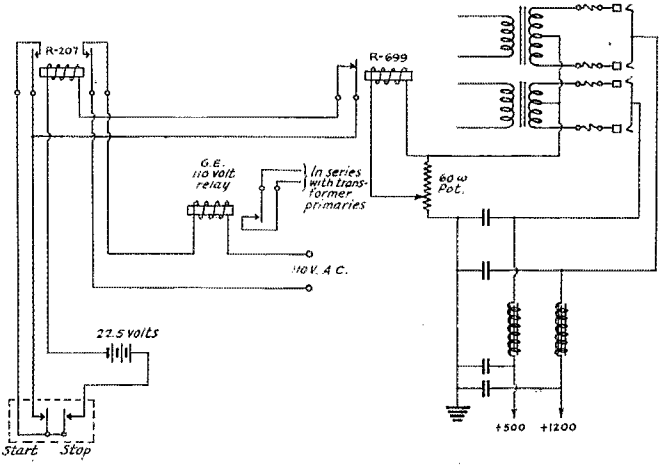

FIG. 1 — THE PUSH-BUTTON CONTROL CIRCUIT

The potentiometer setting determines the current at which the overload relay, R-699, will operate and shut off the primary power.

The 60-ohm potentiometer is the means of adjustment for different overload currents. Practically the total plate current of the complete transmitter flows through the potentiometer. For example, the potentiometer may be adjusted so that the relay will operate when, let us say, a 300-ma. current flows through the resistance. Now if for any reason a current of 300 ma. or more flows through the potentiometer the R-699 relay operates, opening its contacts and in turn releasing the R-207 relay. The 110-volt relay, being under control of a pair of contacts on the R-207 relay, also releases and shuts off the power supply.

* 60 Rolling St., Lynbrook, L. I.

Additional protection is provided when operating on 'phone. This protection consists of two more relays which are connected into the circuit as shown in Fig. 2. Class B modulation is used for the 'phone job, and to make certain the load is always on the Class B output transformer before plate voltage is applied to the audio system, the

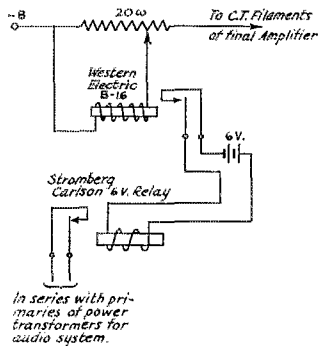

FIG. 2—A CONTROL CIRCUIT FOR CLASS B MODULATORS

To prevent possible voltage breakdown in the output transformer should the modulator receive excitation with the Class C amplifier load removed.

control relay B-16 is connected in the last amplifier stage. Since a few seconds are required for the crystal to start and for power to appear in the final amplifier the output transformer would be unloaded during this interval. However, no damage can be done to the output transformer when using the automatic control since the voltage cannot be applied to the audio system until after the final stage is drawing plate current. When 'phone is used the potentiometer is set to take care of the additional current required by the audio system.

This system has been in constant use at W2EB for three years and has not given a moment's trouble. It has prevented plenty of grief and saved lots of equipment. We are now using it at W8PK, where it is proving to be equally reliable.

Silent Keys

It is with deep regret that we record the passing of these amateurs:

Milton E. Adams, W9AQG, Minneapolis, Minn.

Scott Biggs, W5AXG, Jackson, Miss.

Edward P. Getter, ex-8AIM, Dayton, Ohio

Wm. E. Maguire, W6CFA, Olinda, Calif.

Sylvester Miller, ex-9UR, Aurora, Ill.

Headley Peake, W3DDE, Big Stone Gap, Va.

Chester Tworkowski, W8ECD, Detroit, Mich.

NEW REGULATIONS!

THE Federal Radio Commission on June 23d enacted complete new amateur regulations.

At request of the A.R.R.L. Board, effective immediately the 160-meter 'phone band is widened to read 1800–2000 kc., and the bands 28,000–28,500 kc. (a fourth of the 10-meter band) and 400–401 mc. are opened to 'phone for all amateurs. You may GA with voice on these frequencies anytime you wish.

The remaining regs are effective October 1st. Highlights:

Station licenses only to those who qualify as operators and who own or control apparatus. Separate operator licenses for those who have no station, but no separate station license for non-operators.

As per Board's recommendation, adequately-filtered d.c. power supply required on all stages on frequencies below 14,400 kc. (all wave lengths down to and including the 20-meter band). Tone-modulation permitted above 28 mc. (10-meter and 5-meter bands — and $\frac{3}{4}$ m.).

Every licensee entitled to operate a portable without special license, under same call, per simple new rules. No more separate portables.

Amateur mobile authorized on aircraft only, on 56-mc. and 400-mc. bands only.

No change in communication ("traffic") regulations.

No change in existing licenses until they expire, but new license system for newcomers and for renewals as either op or station license expires. Station and operator business combined in one application, one examination; all papers to be graded in Washington; ultimate result, one combined station-and-operator license issued from Washington, term 3 years.

Extra First Class license abandoned when expired. New op licenses endorsed Class A, Class B or Class C. Class A is unlimited, i.e., includes unlimited 'phone. Class B is c.w. plus limited 'phone, like present First Class. Classes A and B only by personal examination as now, compulsory within 125 miles airline of the 20 district offices (see list, p. 33, *QST*, December 1932, or *License Manual*) or of Washington, St. Louis, Pittsburgh, Nashville, Oklahoma City, San Antonio, Columbus, Des Moines, Cincinnati, Cleveland, Schenectady, Winston-Salem. Outside that range, eligible for Class C by mail, same

(Continued on page 42)

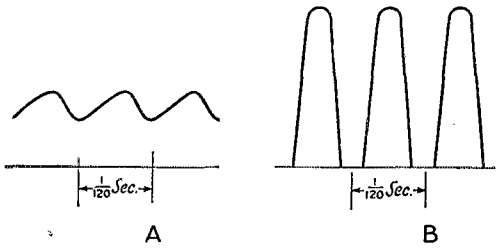

Fig. 1 — The current flowing between the center-tap of a plate transformer and the filter: A, with choke input; B, with condenser input.

Another Method of Keying With Controlled Rectifier Tubes

BY BYRON GOODMAN,* W1JPE

Those hams whose inclinations are toward pre-filter keying, but who have hesitated to oust a pair of perfectly good 866's in favor of more expensive grid- or magnetically-controlled tubes, will find this article of interest. Only one controlled rectifier tube is needed — and the existing power supply is hardly disturbed.

PRIMARY keying of power supply transformers has enjoyed a certain amount of popularity because, keying through the power supply filter, it gives a "softness" that prevents thumps and eliminates clicks. One of its major disadvantages, especially in high-power circuits, is the bad sparking at the key or relay contacts due to inductive surges from the transformer primary. This disadvantage was eliminated by the introduction of grid[1]- and magnetically[2]- controlled mercury-vapor rectifier tubes, to be used in the regular full-wave rectifier circuits. However, there is a fairly simple way to retain the desirable characteristics of rectifier keying with only one controlled rectifier instead of the usual two.

The controlled rectifier tube can be used only in circuits where the anode voltage is reduced to zero during part of the cycle, otherwise when the current has once started flowing the grid can never again regain control. For this reason the tube cannot be used in ordinary keyer-tube applications or other d.c. circuits but it can be used in rectifier circuits. Ordinarily two are used in the usual full-wave rectifier circuit, where the anode voltage is zero during one-half of the

(Continued on page 112)

* Assistant Secretary, A.R.R.L.

[1] *QST*, Feb., 1938, p. 34.
[2] *QST*, Sept., 1938, p. 42.

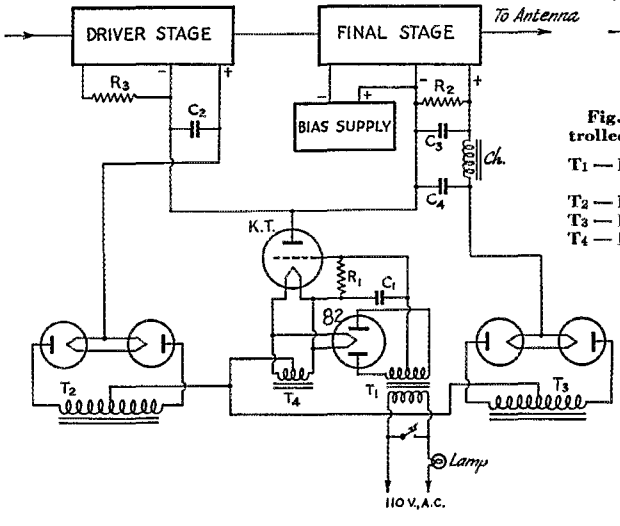

Fig. 2 — One method of applying a single controlled-rectifier to multi-stage keying.

T1 — Bias transformer, 300-volt each side, low current, insulated for total plate voltage.
T2 — Driver plate transformer.
T3 — Final plate transformer.
T4 — Keyed-rectifier filament transformer. 2½-volt, 10,000-volt insulation.
KT — Controlled rectifier tube. (Eimac KY-21 or Sheldon KY-866.)
C1 — .25 μfd., 600-volt paper.
C2 — 1 μfd. if driver uses high voltage and low current; 2 μfd. if driver takes low voltage and high current.
C3, C4, Ch — Final amplifier filter.
R1 — 50,000-ohm, 2-watt carbon.
R2 — 1-3 megohm, or high-voltage voltmeter.
R3 — Driver stage grid leak.

"TWIN" SERVICE



POPULAR PRICES plus HELPFUL SUGGESTIONS

If you want more than the usual "counter service" or mailed "catalog" . . . if you want sincere and helpful suggestions and the benefit of whatever experience we may have . . . you'll always get it at HARVEY'S . . .

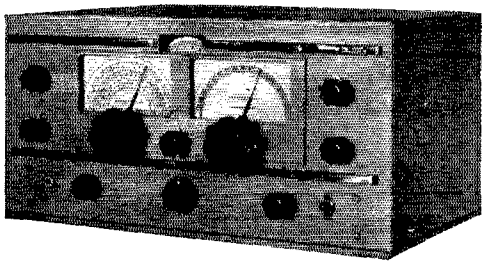

THE NEW RME-70 IS IN STOCK

Come in and see it on display

SPECIAL!

EXCEPTIONAL VALUE! LIMITED QUANTITY!

POWER TRANSFORMER

Made by one of the Country's Leading Manufacturers

● Hum Bucking Type Coil Structure ● Completely Poured with Humidity Proof Compound ● Designed to deliver 1500 or 2000 volts D.C. at 500 MA. ● Dimensions 10½ x 8½ x 8 ● Gross Weight 85 lbs..... $16.95

OUR *Best* VALUE IS OUR RECORD OF LOYAL SERVICE

HARVEY

Radio Company of New York

103 WEST 43rd STREET • NEW YORK, N. Y.

CABLE ADDRESS: "HARADIO"

The Cairo Regs

(Continued from page 30)

signals or a code word, and will be used for the transmission of information that may be used only by persons so authorized, such as the subscribers to a press service.

Remember the scheme for classifying types of emissions, wherein A3 is telephony, etc.? There are a few changes there worth noting. The basic uninterrupted carrier, of course used only in special cases such as standard-frequency emissions, is now spoken of as a Type AO continuous wave. Type A1 remains c.w. telegraphy, Type A2 modulated telegraphy, Type A3 telephony. Facsimile is now to be designated Type A4 and television becomes Type A5 emission.

There are a few changes in the prefix letters assigned nations for their calls, but these have been reported as current news as they went into effect, and they appear in detail in the periodical revisings of the I.A.R.U. country list, the prefix listings in the *Handbook*, etc.

That's the works, as far as things interesting to us are concerned.

Another Method of Keying

(Continued from page 31)

cycle and the grid can regain control. If a controlled rectifier is placed between the center-tap of the plate transformer and the filter, the current through the tube will look like Fig. 1-A if choke input is used, but it will look like Fig. 1-B if condenser is used. Thus with condenser input the current from the transformer center-tap flows in only one direction but is reduced to zero 120 times every second, and a single controlled rectifier can be used to key the circuit. The keying will still be through the filter and will retain the characteristics of rectifier keying with a saving of one special rectifier tube. Since condenser input and a minimum of filter are normally used with primary or rectifier keying, no changes are necessary in the circuit other than the introduction of the keyed rectifier tube and its control circuit.

In Fig. 2, an adaptation of the primary-keyed system described by W6CUH,[3] the driver and final amplifier are both keyed, and no bleeder is used on the final power supply (except a voltmeter or very high resistance so that the filter will gradually discharge and prevent accidental shock). This system has the advantage that with the key up the voltage on the final amplifier is a little below what it is with the key down, and no thumps are introduced by regulation of the final amplifier power supply. If the keyed driver stage put no "tails" on the characters the final amplifier supply voltage would always remain exactly the same, key up or key down, but with the keying described the voltage will drop somewhat in the "key up" position, depending on the storage in the driver stage supply. Any of the usual methods can be used to control the rectifier

[3] *QST*, March, 1937, p. 31.

GOOD RESULTS DEMAND
Good Instruments!

★ 3" and 4" Sizes Stocked
★ Other Sizes Available
★ Round or Square
★ Attractively Priced

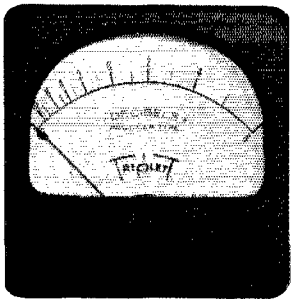

MODEL 327-A DECIBEL METER

Standard range reads up 6 and down 10 decibels, zero decibel at 1.73 volts, 500 ohm line, 6 milliwatts, standard damping furnished unless highly damped is specified.

3" Instrument in New Style Molded Case. **$12.00**

ALSO 4" MODELS

Model 321 — 3" Round **$12.00**

Model 421 — 4" Square **$13.17**

Decibel Meter Kit — Model 150 Kit complete with Decibel Meter, necessary multipliers, switch and other accessories **$20.00**

THE TRIPLETT ELECTRICAL INSTRUMENT CO.
251 Harmon Ave. Bluffton, Ohio

RADIO ENGINEERING

RCA Institutes offer an intensive course of high standard embracing all phases of Radio and Television. Practical training with modern equipment at New York and Chicago schools. Also specialized courses and Home Study Courses under "No obligation" plan.

Illustrated Catalog on request

RCA INSTITUTES, INC. Dept. ST-39
A Radio Corporation of America Service
75 Varick St., New York 1154 Merchandise Mart, Chicago

Learn to Send and Receive CODE

Learn to send and receive code signals, like operators on ships at sea and at commercial and amateur land stations. Intercept distress signals, news flashes, bulletins, and dozens of other kinds of interesting radio communications.

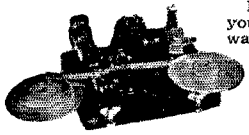

MASTER TELEPLEX teaches you to receive code exactly the way the world's best operators do — by sound. A heavy waxed paper tape, running through a machine, operates an automatic key which sends messages to you, at any speed you desire. As you improve in speed, the machine sends faster, gradually preparing you for top-speed amateur and commercial signals. With the new All Electric MASTER TELEPLEX you learn to send by sending, and the signals you send are repeated back to you, exactly as you sent them, thus enabling you to correct your own errors. We furnish a complete course, lend you the All Electric MASTER TELEPLEX and give you personal instruction with a MONEY BACK GUARANTEE. Send for our new TELEPLEX FOLDER Q1 today. IT'S FREE!

THE "HAM" SPECIAL Standard Teleplex — a highly efficient code teacher using heavy specially prepared waxed paper tape, having two rows of perforations. Write for Free folder "Q.T.-1."

TELEPLEX CO. 67-69 PARK PLACE NEW YORK, N. Y.

In Canada write:
CANADIAN ELECTRONIC INSTITUTE, TORONTO, ONTARIO

tube[1,2]—the one shown is used because the well-insulated bias-supply transformer was on hand.

The system is in use at WIJPE, and the 150-ma., 1700-volt, driver supply and 350-ma., 2800-volt, final supply are handled easily by any of the control tubes available.

[1] *QST*, Feb., 1938, p. 34.
[2] *QST*, Sept., 1938, p. 42.

Selectivity With the 2-Tube Regenerative Receiver

(Continued from page 37)

parison between receivers is to take a case when two incoming signals are so close in frequency that the difference is well down in the audio range, then to see which receiver makes copy of one of them possible. This comparison was made between the pee-wee and a well-known superhet with a crystal filter and repeated day after day. It is still uncertain whether the super shows much, if any, superiority. This would indicate rather unexpected selectivity.[3]

W8QBW, located in a suburb of Detroit, is in the basement, practically underground. The "ground" is a galvanized pipe passing through the floor into permanently damp earth. To this pipe is bolted a piece of half-inch brass pipe which runs along the edge of the shelf so that ground is brought right up to the receiver. The ground wire from the set is only a few inches long. This may be an important point, but the set was also tested on the second floor, with a steam radiator ground, and they came rolling in just the same.

The power supply for a regenerative receiver needs some attention. The one here has three chokes and three condensers and is satisfactorily quiet.

Referring to the photographs, on the left side are the power-supply and 'phone plugs, in front are the band-spread and band-set dials and on the right side are the antenna and ground posts and the potentiometer knob. On top the arrangement is self-explanatory. In the underside view, with the condenser dials at the left, will be seen the two midget variables; in the center is the audio choke, in the corners condensers C_6 and C_7 (with R_4), at

[3] This particular superhet is of the type without a selectivity control, and depends upon the phasing control for variation of effective selectivity. The crystal input circuit is normally factory-adjusted to a relatively broad setting, so that the audio peak on a c.w. signal is not nearly so sharp as it would be on a set having the crystal selectivity adjusted to a high value. Under these conditions the comparison is not so far-fetched as it might seem at first glance, since with both receivers separation of signals having nearly the same beat note is mostly a job for the selectivity of the ear rather than that of the receiver. The regenerative set's selectivity is higher than usual because it is dealing with signals of small amplitude compared with those furnished by the conventional antenna. It is therefore working under considerably more favorable conditions than it would be with a large antenna, or if it had been preceded by an r.f. amplifier. Of course, the "other side of zero beat" is not eliminated, as it is in the crystal super. — EDITOR.

ETX-12

Electronic TUBE

HAM NEWS

JULY-AUGUST, 1946

VOL. 1—NO. 2

Copyright 1946, By General Electric Company



QUICK QRO—CLEAN KEYING

Page 1 & 2–Power Supply Circuit and Details ● Page 3–Questions and Answers–Tricks and Topics ● Page 4–FG-17 Technical Data

FG-17 Thyratrons Give Variable Output and Grid-phased Keying

ELECTRICAL CIRCUIT

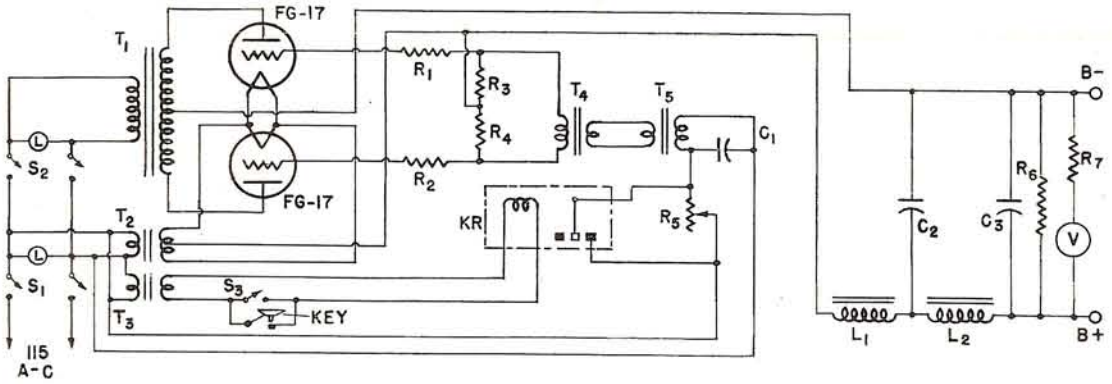

Fig. 1—Circuit Diagram of Power Supply Using Two FG-17 Thyratrons.

CIRCUIT CONSTANTS

C_1 = 0.003 mf. 600 volt mica
C_2, C_3 = 4 mf. 2000 volt G-E Pyranol
KR = Keying relay, 6 volt coil
L = 115 volt pilot lamp
L_1 = Input choke, 5–20 henry, 500 ma (Thordarson T19C38)
L_2 = Smoothing choke, 12 henry, 500 ma (Thordarson T19C45)
R_1, R_2 = 10,000 ohm, 2 watt
R_3, R_4 = 5,000 ohm, 2 watt
R_5 = 50,000 ohm, 9 watt potentiometer (Mallory E50MP)
R_6 = 50,000 ohm, 100 watts
R_7 = Meter multiplier (see "V")
S_1, S_2 = DPST Heavy-duty a-c switch
S_3 = SPST toggle switch
T_1 = 1875, 1560, 0, 1560, 1875, volts @ 500 ma. (Thordarson T19P64)
T_2 = 2.5 volts @ 10 amps, high-voltage insulation (Thordarson T64F33)
T_3, T_4, T_5 = 6.3 volts @ 1 amp.
V = 0–2 kilovolt voltmeter (GE 8DO41V)

The half kilowatt power supply shown in the circuit above and the photograph below (Fig. 2) has been designed for both phone and c-w operation and is rated to deliver 1250 volts at 475 ma. For phone work a small potentiometer permits smooth plate voltage variation from 1250 volts down to approximtaely 500 volts, allowing rapid power reduction when local QSO's are made. For c-w work, clean and clickless keying is obtained by grid keying of the rectifiers.

Voltage change is accomplished by phasing the grid voltage applied to the General Electric FG-17 thyratrons. The potentiometer used (see Fig. 1 above) allows the output voltage to be changed under full load.



Fig. 2—Front-panel View of Thyratron Rectifier Power Supply

CQ . . . . CQ . . . . CQ . . .

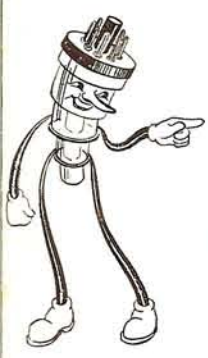

Lighthouse Larry wants you Hams to submit material for "Questions and Answers" and "Tricks and Topics" (see page three this issue).

Lighthouse Larry wants these two features to be full of live information, so get those letters rolling in. For each "question" or "trick" published in *Ham News* Lighthouse Larry will award $10 worth of G-E tubes.

All entries become the property of the Electronics Dept., Tube Division, General Electric Company. What say, gang!

73's

Lighthouse Larry

The power supply may be used to supply plate voltage to a pair of GL-812 tubes in Class C and also supply plate voltage to a pair of GL-811 tubes acting as Class B modulators. If the power is reduced on the final, modulator voltage is similarly reduced.

The change from phone to c-w is made by merely throwing the switch, S_3. Using thyratron grid keying, self-bias may be used for the final instead of fixed bias, and if the driver and oscillator plate voltage is obtained from this same power supply complete break-in operation is possible.

The advantages of thyratron grid keying are many. Key clicks are minimized as the current surge normally experienced is damped by the filter inductance. As a result, the keying envelope is rounded. Further, the keyed circuit consumes practically no power and as a result sparking at the relay contacts is eliminated. Because the key itself makes and breaks only the secondary of a 6-volt transformer, no dangerous voltages are present at the key, and no arcs exist to cause key clicks.

CIRCUIT DETAILS

As may be seen from Fig. 1, the power supply is a standard full-wave rectifier circuit with the addition of the thyratron grid section. The voltage for the grids of the General Electric FG-17 thyratron is obtained from transformers T4 and T5. These 6-volt filament transformers are connected back-to-back, that is, their 6-volt windings are connected together. If a 115-volt (1–1 ratio) transformer is available with high-voltage insulation, it could be substituted for T4 and T5. These transformers are shown in Fig. 3 mounted on a bakelite sub-panel. This is necessary in order to achieve sufficient voltage insulation. Transformers T4 and T5 need not be insulated for high voltage, as ordinary filament transformers have sufficient insulation when used in series as shown.

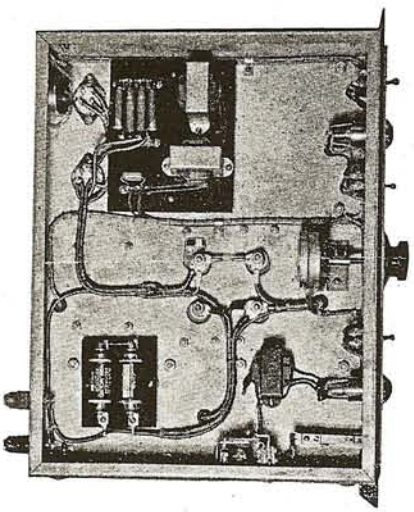

Fig. 3—Bottom View Showing Wiring and Placement of Parts

Resistors R3 and R4 form a center tap and may be omitted if a center-tapped transformer is available. Resistors R1, R2, R3, R4, and capacitor C1 are mounted on the bakelite sub-panel together with transformers T4 and T5. The placement of the other parts is easily seen by reference to Fig. 3 and Fig. 4.

The keying circuit is so wired that with key up conditions, the relay contacts short out R5, giving zero d-c voltage output. Switch S3 may be

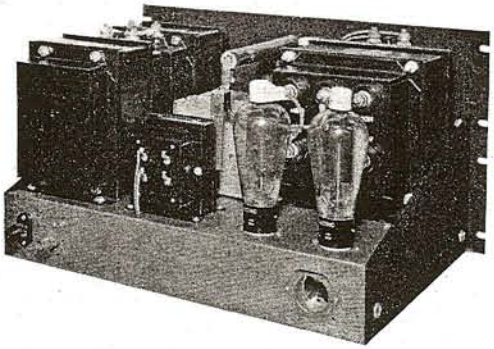

Fig. 4—Rear View Showing Mechanical Arrangement (Note that the power transformer is mounted toward the front panel)

eliminated if a shorting-type jack is used for the key. In this case, the key is plugged in for c-w or removed for phone work.

The entire unit is mounted on a 17 by 13 by 3 inch chassis with a 10½ inch standard relay-rack panel. The voltmeter is recessed for safety reasons.

OPERATION

After the unit is completed it may be necessary to change the connections between transformers T4 and T5 in order to get proper phasing. If a change in the setting of potentiometer R5 produces no change in output voltage, this connection change will cure the trouble.

Higher voltage may be obtained from the power supply by increasing the a-c voltage from the plate transformer. Since the peak forward voltage rating of the FG-17 is 2500 peak volts, the maximum rms voltage from center tap to one side of the transformer should not exceed 1750 volts. If this rating is not observed the FG-17 tubes may be damaged.

Controlling the output voltage by thyratron grid phasing introduces one complication—that of ripple. As the output voltage is lowered the power supply ripple increases. The table of Fig. 5 gives readings of ripple percentage vs output voltage at different loads as experienced with the power supply described.

Voltage (Volts)	Load (ma)	Ripple (per cent)
1250	500	0.12
1250	110	0.09
1000	400	1.4
1000	100	1.2
750	470	4.1
750	250	3.4
500	350	8.8
500	160	7.6

Fig. 5—Table Showing Ripple Percentage vs Output Voltage at Different Loads

TECHNICAL INFORMATION

GENERAL CHARACTERISTICS — FG-17

Number of electrodes 3

Electrical

Cathode—Filamentary type			
Filament voltage			2.5 volts
Filament current, approx.			5.0 amperes
Filament heating time, typical			5 seconds
Peak voltage drop, typical			16 volts
Approximate control characteristics			
Anode voltage	40	100	1000 volts
Grid voltage	0	−2.25	−6.50 volts
Anode to grid capacitance, approx.			4.4 micromicrofarads
Ionization time, approx.			10 microseconds
De-ionization time, approx			1000 microseconds

Mechanical

Net weight, approx.	3 ounces
Shipping weight, approx.	3 pounds
Mounting position	vertical, base down

MAXIMUM RATINGS

Maximum peak anode voltage	
Inverse	5000 volts
Forward	2500 volts
Maximum negative grid voltage	
Before conduction	500 volts
During conduction	10 volts
Maximum anode current	
Instantaneous, 25 cycles and above	2.0 amperes
Instantaneous, below 25 cycles	1.0 ampere
Average	0.5 ampere
Surge, for design only	40 amperes
Duration of surge current	0.1 second
Maximum grid current	
Instantaneous	0.25 ampere
Average	0.05 ampere
Maximum time of averaging current	15 seconds
Temperature limits, condensed mercury	+40 to +80 centigrade
Recommended temperature, condensed mercury	+40 centigrade

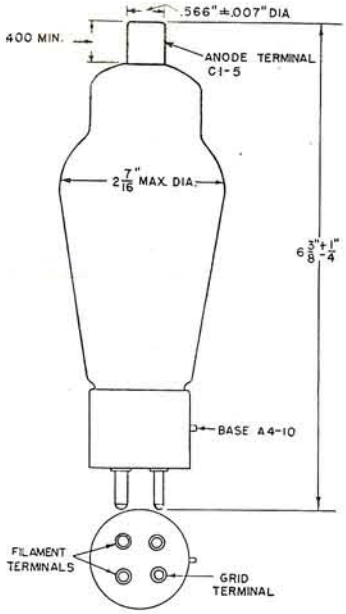

OUTLINE
FG-17 THYRATRON

The FG-17 thyratron is a negative-control mercury-vapor tube for use where it is desired to actuate the tube with a change in negative grid voltage. It requires relatively little grid power and is suitable for use in relay circuits where current flow is desired in the absence of grid excitation.

UNITED RADIO INC.
1314 VINE ST. CIN. O.
WHOLESALE DISTRIBUTORS

Space for Dealer Imprint

Electronics Department
GENERAL ELECTRIC
Schenectady, N. Y.
(In Canada, Canadian General Electric Company, Ltd; Toronto, Ont.)

Printed in U.S.A.
7-46 (40M)
Filing No. 8850

Designer's CORNER

Notes on Designing a Power Supply

This is not intended to be a deep technical discussion, but merely a clear, easy-to-follow description of how to select the right components for a power supply. For the reasons behind the statements about to be made you are referred to any amateur handbook. A power supply circuit is relatively simple, but unless certain fundamental rules are observed, the results obtained will not always be satisfactory.

The first two questions to be answered are: 1) do I need exceptionally good regulation? and, 2) how much ripple voltage can I tolerate? Both of these questions can be answered simply if you know the use to which the power supply will be put.

You will need good regulation if the current drain from the power supply is variable; that is, subject to change while in use. Examples of this sort of service would be power supplied to a class-B modulator stage, to class-B linear amplifier stages, or to the stages in a c.w. transmitter, including the keyed stage. On the other hand, if you are supplying voltage to a buffer stage in a 'phone transmitter, then regulation is not too important, because the current drain will be constant.

The question on ripple is just as easy to answer. For any stage in a c.w. transmitter, 5% ripple can be tolerated. For any stage in the r.f. section of a 'phone rig, except the modulated stage, 5% ripple is satisfactory. However, for the modulated stage itself, the power supply should have 0.25% ripple, or less. The audio stages should similarly have less than 0.25% ripple applied to them, except for the class-B modulator, where 5% ripple is satisfactory. In the case of high-gain audio amplifiers, as low as 0.1% ripple is desirable. This figure of 0.1% ripple applies also to power supplies used with receivers.

The ripple requirement determines the filtering necessary. A one-section filter ordinarily is used to reduce the ripple to 5%, but it is not usually economical to try to get much more reduction than that with a one-section filter. Considering full-wave circuits, where the ripple frequency is 120 cycles, five-percent ripple will be obtained when the product of inductance (in henrys) and capacitance (in mfd) equals twenty. A choke input filter with a 10-henry choke and a 2 mfd condenser will give 5% ripple. To achieve further ripple reduction a multiple-section filter is usually employed. A two-section filter of this sort might consist of an input choke, a condenser, a second choke, and another condenser. For example, if you added another 10-henry choke and a 4-mfd condenser to the filter constants given above, the overall filtering action would reduce the ripple to less than 0.2 percent. (Most handbooks tell you how to compute the ripple for other combinations of L and C.)

The regulation of a power supply, that is, the relation between the output voltage at no load and at full load, is determined almost entirely by the inductance of the input choke. The *minimum* value of inductance at this point which prevents the d.c. output voltage from rising above the average value of the a.c. voltage being rectified is called the *critical inductance*. Conservative design indicates the use of a choke having a value at least twice the critical inductance.

The critical inductance, in henrys, for 120 cycle ripple is determined by dividing the load resistance by 1000. For example, a load of 1000 volts at 40 mils (the bleeder current, or minimum current only) gives a load resistance of 25,000 ohms. In this case, an input choke of 50 henrys would give excellent regulation characteristics (twice the 25 henrys critical inductance).

If you find that this value of inductance is too great a drain on the pocketbook, a lower value can be used if the bleeder current is increased. For example, an 80 mil bleeder will result in a critical inductance of 12.5 henrys, so that a 25-henry choke would be desirable. Note that the input choke need have this high value of inductance only at the minimum (bleeder) current. Swinging chokes are widely used for this reason.

Check the value of the bleeder in your present power supply, and see if you have one which is drawing sufficient current!

At this point in your thinking you are ready to select components for your power supply. You select an input choke of the calculated value with sufficient current rating to handle both the bleeder current and the useful load current. Next, select a condenser to give the required reduction in ripple when used with the input choke already selected (choose these values to avoid resonance at the ripple frequency—your handbook gives details). A second section can be selected if ripple requirements demand it. The bleeder resistor is determined as mentioned in the previous paragraph.

Next, compute the voltage drop across the choke or chokes, and add to this the voltage drop across the rectifier tube. Now add the desired output voltage, and multiply by 1.1 to get the value of a.c. r.m.s. voltage required from center-tap to one side of the transformer. For example, if the load current is 200 mils, the bleeder current 40 mils, and desired output voltage 1000 volts, compute the drop across the chokes due to 240 mils current (say this is 24 volts), add tube drop (say 15 volts for mercury-vapor tubes), and you get 1039 volts. Multiply by 1.1 and you get 1143 volts. You therefore want a transformer with a secondary voltage rating of 1143-0-1143, and with a current rating of approximately 250 mils. This transformer will supply a d.c. output voltage of 1000 volts and a useful current of 200 mils, in the power supply you just calculated.

Some transformers are rated for ***d.c. output voltage*** rather than for a.c. voltage. In this case the transformer manufacturer has already calculated the d.c. output voltage from a typical filter system. Just make certain that you know how the transformer is rated before you use it.

— Lighthouse Larry

MOBILE/PORTABLE POWER SUPPLY

Here's a handy mobile/portable power supply designed for use with any one of a number of pieces of gear described in G-E HAM NEWS during the past few years—the Emergency-Portable Rig, the Mobile Modulator, the 6-Meter Receiver, the 6-Meter Transmitter, the 6-Meter CD Receiver, and the Mobile Marine Receiver.

This new power supply provides exceptional voltage regulation and incorporates some advanced thoughts in design. It's worth looking over—especially by fellows inclined to frown on vibrator and selenium rectifier circuits.

—Lighthouse Larry

The Emergency/Portable Power Supply puts out 300 volts at 100 milliamperes and −40 volts bias—all from a 4 x 5 x 6-inch utility box. Input at full load is 6 volts d-c at 7.65 amperes. Efficiency is 67%. The supply is light weight, and voltage regulation is exceptional.

Compromising on the 300-volt, 100-milliampere size gives an adequate design which will not overburden the average battery. The supply to be described evolved after serious consideration of the most frequently observed faults of the customary vibrator type supply: Voltage regulation usually poor—with tremendous jumps even between half-load and full-load conditions; vibrator life short due to contact failure when self-rectifying type circuits are used; and conversion efficiency surprisingly low—often less than 50%.

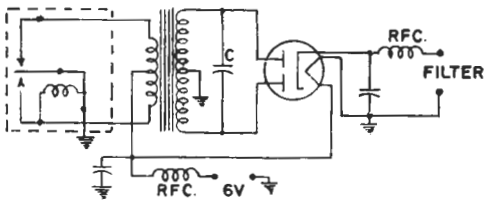

Figure 1

A typical nonsynchronous vibrator supply is shown in Figure 1. The vibrator is a reed with heavy contacts that switches the current from one side of the primary of the power transformer to the other. The reed is driven by a small magnet coil in one direction, and then springs back by itself to make the other contact—in a manner similar to the common door bell.

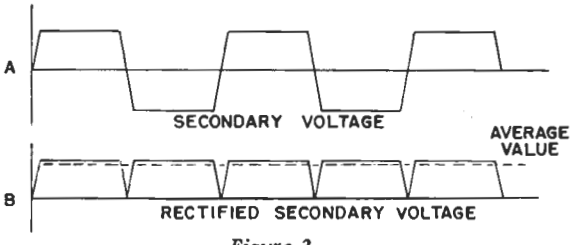

Figure 2

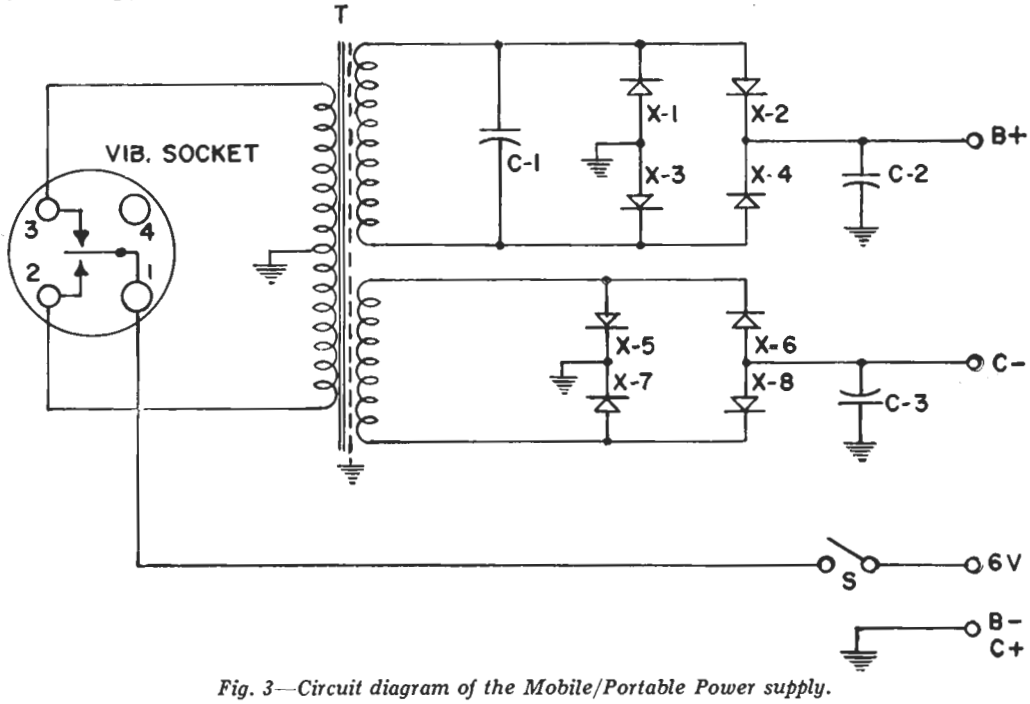

Fig. 3—Circuit diagram of the Mobile/Portable Power supply.

C_1—.01 mf 400-volt plastic buffer
C_2—20 mf 450-volt (Sprague EL-2)
C_3—50 mf 50-volt dry electrolytic
Vib—Vibrator unit (Cornell-Dubilier 5314)
S—SPST toggle switch
T—Vibrator transformer. Pri.: 6 v. DC, 7.5 A; sec.: 300 v., 100 ma.; 40 v. bias winding. (Ballastran BC-385—see text)
X_1-X_4—100 ma 380-volt selenium rectifier (GE-6RS5GH1)
X_5-X_8—selenium rectifier modified to one plate (see text)

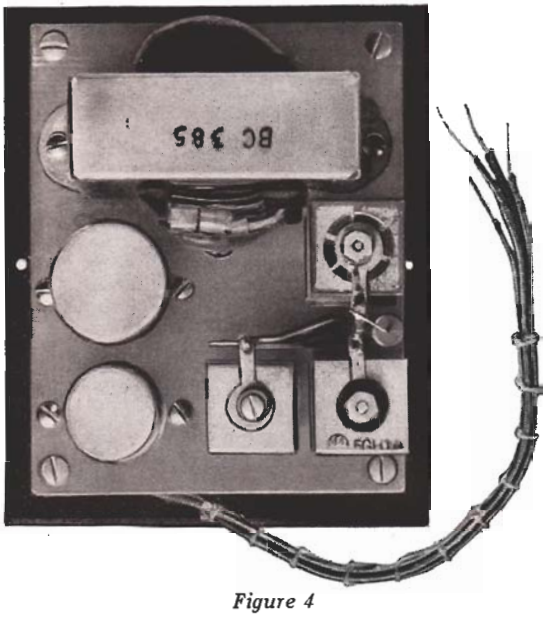

Figure 4

This action produces the effect of square-wave a-c excitation of the primary circuit—which of course is carried over to the secondary. See Figure 2 (A). Capacitor C in Figure 1 absorbs the inductive kick which occurs when the current flow is reversed. (If not suppressed, this kick would put "spikes" on the edges of the square wave, produce high surge currents through the rectifiers and cause sparking at the vibrator contacts.)

When the secondary voltage is rectified by a full-wave system, the output appears as in Figure 2 (B). Obviously, filtering this output is a relatively easy task. In addition, this wave form is extremely easy on rectifiers since the peak voltage is just slightly higher than the output voltage—resulting in relatively low peak currents through the rectifiers as compared with the usual power supply.

In a typical circuit, only half the transformer is in use at any one time—thus making the transformer rather inefficient for its size. While nothing can be done about the primary without going into a complicated vibrator structure, it is possible to make full use of the secondary with a bridge rectifier circuit as shown in Figure 3. Just by employing the bridge circuit, the secondary can handle 140% of the volt-amperes of the center-tapped circuit occupying the same space. Or, conversely, the secondary of a bridge rectifier transformer need occupy only 70% of the space required for a center-tapped full-wave secondary of the same rating.

As noted above, square-wave pulses make relatively low peaks—thus permitting use of replacement-type selenium rectifiers rated at 380 volts peak inverse voltage.

The selenium rectifier bridge offers further advantages: Improved voltage regulation due to low forward resistance as compared with vacuum rectifiers; and the fact no warm-up time is required—which may be important in some applications.

The transformer used in the supply illustrated has a high voltage winding rated at 300 volts and 100 milliamperes and a bias winding for supplying minus 40 volts.*

The bias winding on the transformer is also equipped with a full-wave selenium bridge to provide a convenient bias supply for Class B audio systems and/or r.f. final circuits. This eliminates the C battery normally used in mobile or portable work.

Buffer condensers (C1 in Figure 3) usually are rated at 1500 volts. However, if they buff properly, as this one does, the high voltage rating is not necessary. Still, cautious constructors may wish to use a 1500-volt capacitor. We might note, also, that handbook vibrator circuits often call for a resistor of, say, 5000 ohms in series with the buffer condenser to limit the secondary current to a safe value should the buffer break down. Although this was not deemed necessary in the power supply herein described, it is another safety factor that may be employed if the builder wishes.

CONSTRUCTION DETAILS

The power supply illustrated fits into a 4 x 5 x 6-inch utility box with an on-off toggle switch on the front and a 4-terminal barrier-type strip on the back as shown on the front cover of this issue of G-E HAM NEWS. All other components are mounted on a plate of ⅛-inch aluminum which just clears the lips of the utility box and stands off 1 inch behind the front cover as shown. Figures 4 and 5 show the layout. The 50-microfarad bias filter condenser is mounted under the plate between a terminal lug and one of the ground lugs at the base of the high voltage filter condenser.

Aside from careful placement of the components to get them all in the box, the only critical construction

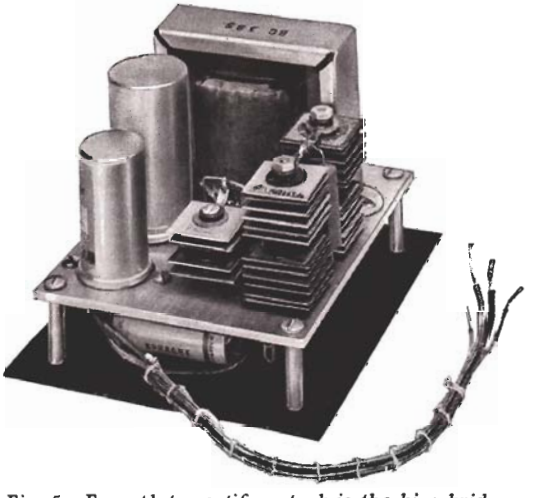

Fig. 5—Four-plate rectifier stack is the bias bridge.

* Made by Ballastran Corporation, 1701 N. Calhoun Street, Fort Wayne 7, Ind. This company now also has designed for G-E HAM NEWS readers a special modulation transformer (BC-384) for use in the Mobile Modulator of the July-August, 1950 issue of G-E HAM NEWS. This modulator has made a hit with many hams. Transformers tested show high efficiency and low distortion. Ratings are: Pri. 10,000 ohms, plate-to-plate; Sec. 10,000/7,000/5,000 ohms at 60 ma. DC unbalanced load. Power output, 10 watts.

problem is the modification of a fifth selenium rectifier to provide the bridge circuit for the bias voltage.

This small bridge is the four-plate stack seen at the left in Figure 5. The first step in taking apart a Model GE-6RS5GH1 rectifier is to pry up the washer clamp at the top. The plates may then be separated with a knife blade, but care must be taken not to disturb the "spider" sealed to each plate. Insert the knife between spider and adjoining washer—not between spider and plate.

The GE-6RS5GH1 rectifiers are marked with a splash of red on the cathode terminal—to which, of course, associated B plus leads are attached. In making up the small bias bridge, it is important to note which sides of the plates are cathode. In the GE-6RS5GH1, the "spider" is sealed to the cathode side. Thus to make a full-wave bridge with one plate in each leg, four of the plates are restacked with washers and suitable lugs. Note the cathodes are joined in the center as indicated in Figure 6.

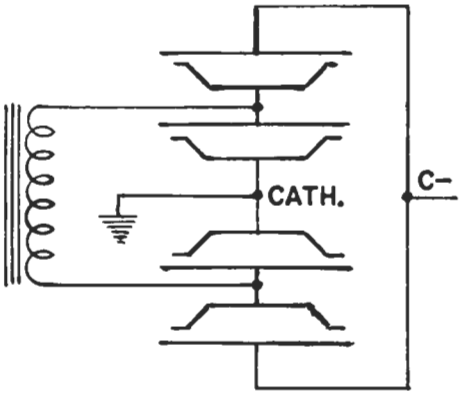

Figure 6

In wiring the power supply note that in the high voltage bridge the ground connection goes to rectifier anodes—whereas in the bias supply the ground goes to rectifier cathodes.

PERFORMANCE

Figure 7 illustrates voltage regulation of this supply under actual test loads. A check for ripple showed .25 volt at no load and 4 volts at full load, peak-to-peak. A one-hour heat run left the supply cool to the touch. Efficiency checked out at 67%.

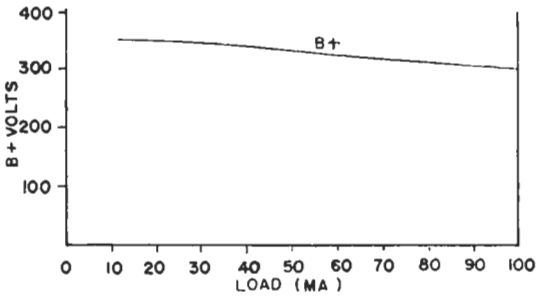

Fig. 7—Voltage regulation under test loads from 12 to 100 ma.

ANTENNA LO

The construction of mobile radio equipment requires, in general, a long series of compromises between efficiency and practicality—compromises which start with the power supply and carry right on through to the antenna system.

The wonder of it is that we can construct any kind of equipment at all rugged enough to withstand vehicle vibration and bounce and yet capable of converting the prosaic 6-volt d-c intended for lights and ignition to r-f waves which travel hundreds and even thousands of miles.

On the higher ham frequencies, where antennas are smaller, problems involving stability become of first order importance. But on the bands below 10 meters, where stability is easier to lick, the most plaguing problem is perhaps the radiator itself.

60-FOOT WHIP?

On 75 meters—the most popular low-frequency mobile band—a 60-odd-foot quarter-wave antenna somehow just doesn't fit into the design of an automobile! So we compromise again and use a loading coil to keep the quarter-wave electrical length and at the same time reduce the physical length.

The compromise, however, *is* a compromise—in the finest sense of the word. It solves the physical problem but hinders us radiowise, because it cuts down the radiation efficiency of the antenna. And after all, what we are primarily interested in getting is the "soup" out into the air.

But as long as we must keep the antenna height down to 8 or 10 feet, we want to get the best deal we

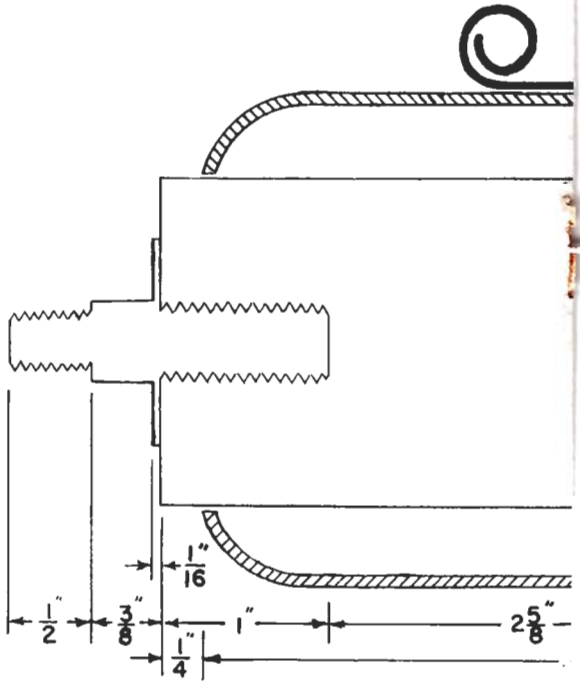

Fig. 1—How the plastic bottle and tun

Electronic TUBES

Ham News

Copyright 1954, by General Electric Company

JANUARY-FEBRUARY, 1954 VOL. 9—NO. 1



ABOUT POWER SUPPLIES

BETTER DYNAMIC CHARACTERISTICS MEAN BETTER OUTPUT ON CW, AM AND SSB

another • Ham News first

Here, for the first time, is a revealing discussion of how transient oscillations in the conventional power supply filter spoil the performance of an otherwise good rig—and what can be done to correct the difficulty.

The next issue of G-E HAM NEWS will contain design and construction specifications for 750-volt and 1500-volt supplies employing the principles discussed here.

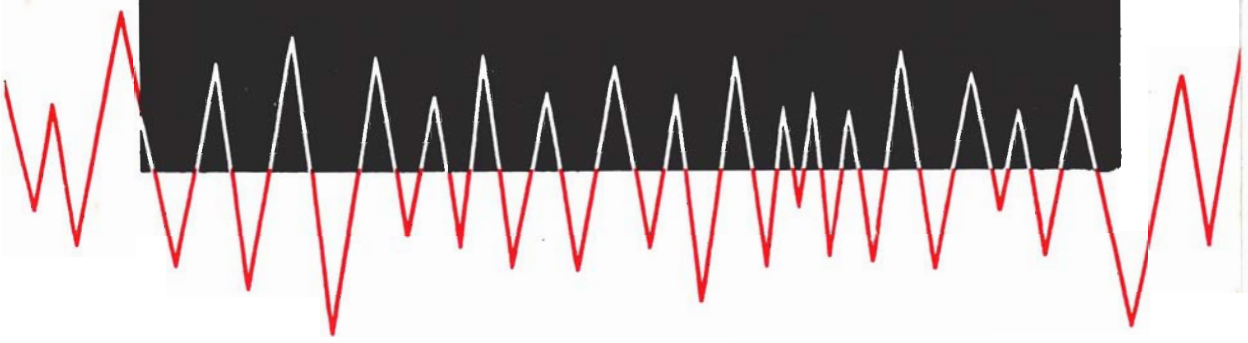

Contents

Dynamic Characteristics of Power Supplies ..... page 2
TV Channel Frequencies ..... page 5
Designer's Corner ..... page 6
Sweeping the Spectrum ..... page 7
Trapping Transients ..... page 8

better dynamic characteristics mean better output on CW, AM and SSB

What is dynamic regulation in a power supply? Because the literature in this field is exceedingly sparse, perhaps a good way to start is to take two common definitions and directly relate them to the subject at hand, thus:

Static—Relating to forces in equilibrium (as d-c plate voltage and current in a rig transmitting a continuous unmodulated carrier).

Dynamic—Relating to moving forces (as d-c plate voltage and current under typical operating conditions in the average amateur CW, AM or SSB rig).

Keeping these definitions in mind will help in understanding just what goes on inside the conventional plate power supply which ordinarily consists of a center-tapped step-up transformer, rectifier tubes, and a two-section choke-input filter to reduce ripple. Since such supplies have been used since the introduction of the mercury-vapor rectifier, one might think that just about all the "bugs" would have been smoked out by now. Well, many bugs have been eliminated and, as a consequence, manufacturers of transformers and chokes now proudly offer what they term "matched power supplies"—sets of components for which they publish ratings, voltage regulation curves, and ripple output to be expected. These "matched" components make up power supplies that do perform as the published data indicates.

LOSS OF VOLTAGE

However, poor *dynamic* regulation in these conventional power supplies means distortion of signal output —alteration of actual radiated intelligence—almost without exception in CW, AM and SSB rigs. These faults exist no matter how good a *static* regulation figure is indicated by d-c input instrumentation. This comes about in the conventional power supply because transient oscillations excited in the filter rob the rig of voltage during a sizable portion of the time it is sorely needed. Hams who light-heartedly pass this effect off as "instantaneous," thereby implying it is of no consequence, may want to examine their power supplies more critically after studying the test data presented below.

Consider the meaning of the voltage regulation curve usually given for the ordinary rectifier-filter combination. This is a "static" curve, obtained by loading the supply to certain currents, reading the voltages across each load, and then plotting the results. Such a curve is useful, but it tells us only what the ***average*** voltage will be at any ***average*** current value—***because the instruments used to measure these values respond only to average quantities.*** Figure 1 shows just such an acceptably good regulation curve in which the voltage drops about 10% or so from no load to full load on an ***average*** basis.

But is it the average load, voltage and current alone that we are interested in? What kind of loads do our amateur transmitters present to their respective power supplies? Do we transmit intelligence with average loads—or with a complex pattern of instantaneous loads?

VOLTMETERS MISLEADING

Consider the final stage of a CW transmitter. At key-up the load is zero, or, at most, a rather small one. When the key is closed, the maximum load current is drawn. Now does the power supply follow the same curve that was plotted under static or slowly varying loads? An ordinary voltmeter might lead one to think so.

But look at Figure 2! This is a photograph of a cathode-ray oscilloscope which shows how the voltage varies with time in the ordinary power supply when the load is suddenly applied as in keying a CW rig. The solid upper line shows the no-load output of the supply—820 volts; the lower solid line represents zero volts. The lower waving line is a 60-cycle timing wave which permits reading the actual load voltage (represented by the upper oscillating line) at any fraction of a second from the instant the load was applied. The spot on the oscilloscope was started as the key closed to a 200-milliampere load. (The steady current rating on the test supply is 250 milliamperes.)

Note how the load voltage dips suddenly to less than a third of the no-load voltage line, then wildly overshoots the line and oscillates about until it finally settles down to the average loaded voltage of 760 volts—which is the same as the static loaded output voltage shown in the curve of Figure 1 for a 200-milliampere load.

(Incidentally, the ripple under load is visible on the right-hand portion of the load voltage curve of Figure 2, but is fairly small compared with the extravagant excursion of the voltage in the period immediately following the application of the load.)

A d-c voltmeter that was connected across the line at the same time merely dropped from 820 to 760 volts and gave no indication of the actual turmoil immediately after keying!

EFFECT ON CW OPERATION

Is this turmoil anything to worry about? Well, the final stage in a CW transmitter generally runs Class C, and the transient oscillation shown across the power supply modulates each character with that same wave form quite independently of any keying filter that may be provided for click reduction. This, then, is the signal envelope—somewhat poorer than ideal!

How long is a dot or a dash in seconds? That depends on the operator for the most part, of course. But this transient oscillation certainly lasts for a considerable portion of the average CW dot or dash, because as can be seen from the timing wave of Figure 2, the voltage does not settle down to a steady ripple until more than a tenth of a second has elapsed. And as anyone who has played with timing in radio or photography work knows, a tenth of a second is far from what is normally thought of as "instantaneous."

When the load is removed (key up), the power supply voltage behaves as photographed in Figure 3—another wild peak, with the oscillation finally settling down to the no-load line. Of course, in this case there is no "on the air" effect, but the filter condensers and all other connected equipment are subjected once

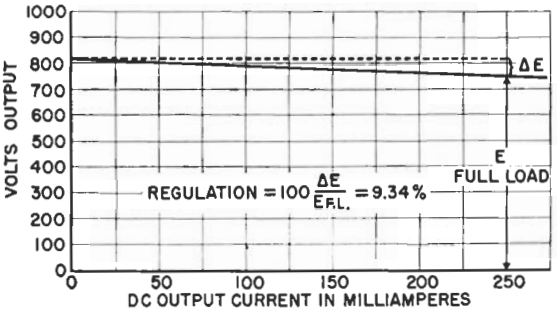

FIG. 1 *Static regulation curve (C_a, C_b any value)*

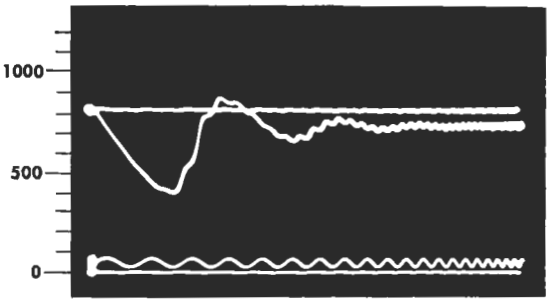

FIG. 5 *Load applied (C_a=0; C_b=10 mfd)*

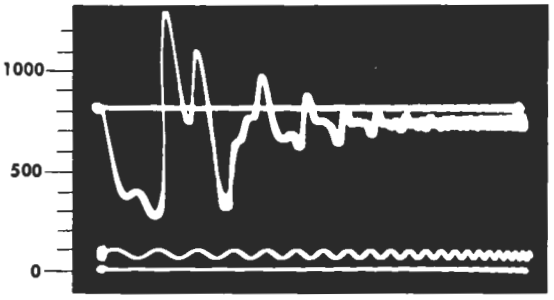

FIG. 2 *Load applied (C_a=C_b=2 mfd)*

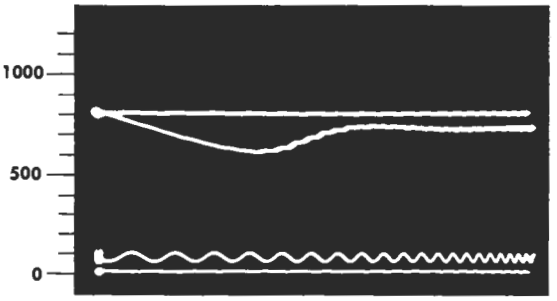

FIG. 6 *Load applied (C_a=0; C_b=45 mfd)*

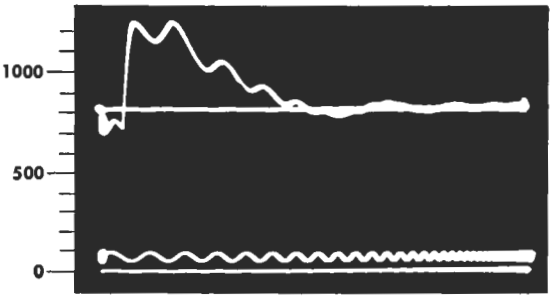

FIG. 3 *Load removed (C_a=C_b=2 mfd)*

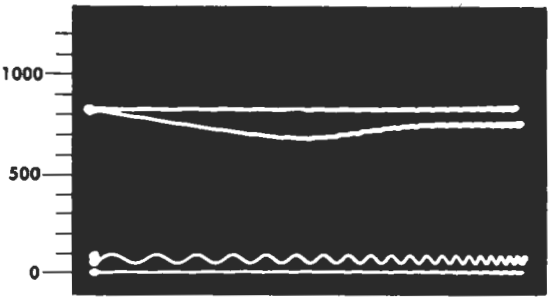

FIG. 7 *Load applied (C_a=0; C_b=90 mfd)*

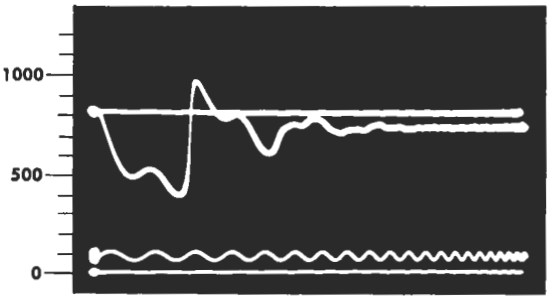

FIG. 4 *Load applied (C_a=C_b=5 mfd)*



FIG. 8 *Load removed (C_a=0; C_b=90 mfd)*

Above data taken with this 750 V/250 ma d-c supply (see text):

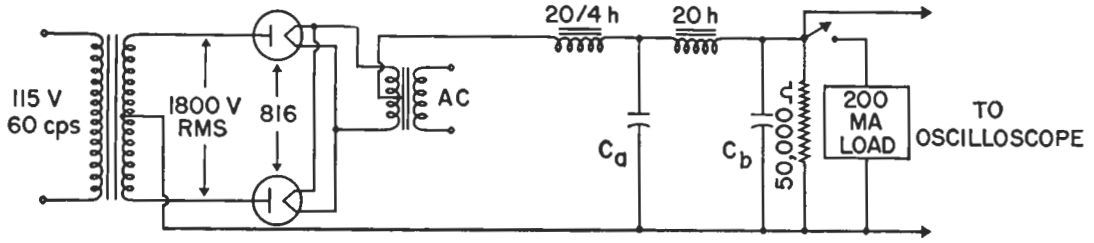

again to this voltage turmoil. This may explain why every once in a while a ham's whole rig is blown to kingdom come when he shuts it off.

The oscillograms shown apply only to single keying actions. Fast keying conditions intensify the transients shown in Figures 2 and 3.

EFFECT ON PHONE OPERATION

So much for CW loads on the common garden variety power supply. Now before the phone men start laughing up their sleeves at their brass-pounding brethren with "hand-modulated" rigs, let's take a close look at Class AB_1, AB_2, and B modulators operated with conventional power supplies.

It is characteristic of these modes of operation to draw average plate current which is a function of the modulating signal. Thus, the modulator load is similar to the on-off type of load experienced in a keyed CW transmitter, and the power supply transient so induced can be a real hazard to good quality. Because of the relatively sluggish action of a d-c plate current instrument (which tends to indicate current flow averaged over about half a second or so) the actual cyclic or syllabic transient load presented to the power supply is much greater than one would be led to believe by just reading the plate milliammeter.

What happens when the power supply behaves as in Figure 1? The answer is high distortion and loss of required peak power because most of the supply voltage just is not there part of the time it is needed by the modulator, and so the modulator tubes cannot draw the peaks of plate current that the grid drive on the modulator stage says should be drawn.

And remember, distortion tests made with steady tones will not show this "dynamic" distortion because the drain on a power supply induced by a steady tone is constant when averaged over one-half of the period of the test tone wave—relatively short compared to a filter transient which lasts more than a tenth of a second.

EFFECT ON SSB OPERATION

Single-sideband transmitters employing Class AB_1, AB_2, or B RF stages present the same type of load to their respective power supplies—and, as a result, also introduce considerable distortion in the radiated signal.

About the only types of emission in common use which do not suffer "on the air" losses as a result of transient filter oscillations are NBFM and FSK. (No transients are excited in the filter because the load is steady.) Linear amplifiers used with AM signals overcome this dynamic power supply regulation problem, but the carrier efficiency of this mode of operation is so low that use of linear amplifiers in amateur AM transmitters is not common. Similarly, constant current (or Heising) modulation for AM is another case where dynamic power supply regulation is not of primary importance. Grid modulation systems—control, screen or suppressor—also side-step the dynamic regulation problem but are inherently low-efficiency systems at best. In all these modes of operation, the only important power supply considerations are adequacy of rating and ripple filtering.

What can be done to improve the dynamic regulation of the conventional power supply? Let us follow the steps that were taken in the shack of W2KUJ to attack the problem.

THE SOLUTION

It became apparent that merely improving the ripple attenuation by adding more filter sections affected the dynamic regulation very little. So the first step was to increase the capacity of the existing filter from 2 microfarads to 5 microfarads per capacitor. The result appears in Figure 4—which shows excellent ripple filtering but only slightly reduced voltage excursions as compared with the transient of Figure 2.

Next, the two 5-microfarad capacitors of the two-section filter were connected in parallel to make a single-section filter (with the two chokes left in series). As shown in Figure 5, the voltage excursions are not greatly changed in magnitude, but have a less complex pattern—comparable, in fact, to that of a simple damped oscillation. But here again, the oscillation is excited in the filter by the suddenly-applied load.

The next step in the test was to use 45 microfarads of capacity as the final element of the filter. The dynamic regulation performance responded nicely, as shown in Figure 6. Note the reduction of magnitude of voltage swing and lowering of the resonant frequency of the filter as compared with Figures 2, 4 and 5.

FINAL DESIGN

This encouraged a final design in which 90 microfarads of capacity rendered the curve shown in Figure 7. Here the dynamic regulation is just slightly greater than the static regulation, which, incidentally, measures 9.34%—quite good enough for almost any amateur transmitter. The "break" characteristics of this final design are pictured in Figure 8. Use of more capacity would improve the dynamic characteristics of the power supply correspondingly because the resonant frequency of the filter would be lowered even farther. (For more detailed theory on the dynamic characteristics of plate power supplies see "Designer's Corner," page 6.)

USING FLUORESCENT TUBE AS TUNING INDICATOR

A sure indicator of maximum RF in your antenna is a fluorescent tube placed in the antenna field. The tube can be taped right to the antenna at the voltage node. Thus in tuning the final or the antenna coupler maximum input is indicated when the light is brightest. This is particularly convenient when your antenna is located in such a position that it can be seen from the window of the shack. The stunt helps especially when using a pi-network in the tank circuit without a coupler.

—S. BAXTER, VE7HK

(*Ed. Note*—No doubt the neighbors will be confused no end to see an antenna winking at them at about 30 wpm—until they suddenly tumble to the fact there may be some relationship between that blinking light up in the sky and the tweedy look their TV picture tube takes on at certain times.)

Electronic TUBES

Ham News

Copyright 1954, by General Electric Company

MARCH–APRIL, 1954 VOL. 9—NO. 2



MORE ABOUT POWER SUPPLIES

TWO 250 MA PLATE POWER SUPPLIES WITH EXCELLENT DYNAMIC CHARACTERISTICS

also a power control unit

In the previous issue of G-E HAM NEWS we presented a discussion of the dynamic characteristics of plate power supplies ordinarily used with amateur transmitters and modulators—together with some design notes on how to improve said dynamic characteristics.

Here are two power supplies designed and constructed in such a way as to not only obtain unusually good dynamic regulation but also to keep cost to a minimum. To fully appreciate these two designs, we suggest you review the previous article. If you can't beg or borrow a copy of our January–February issue (Volume 9, No. 1), drop me a card.

— Lighthouse Larry

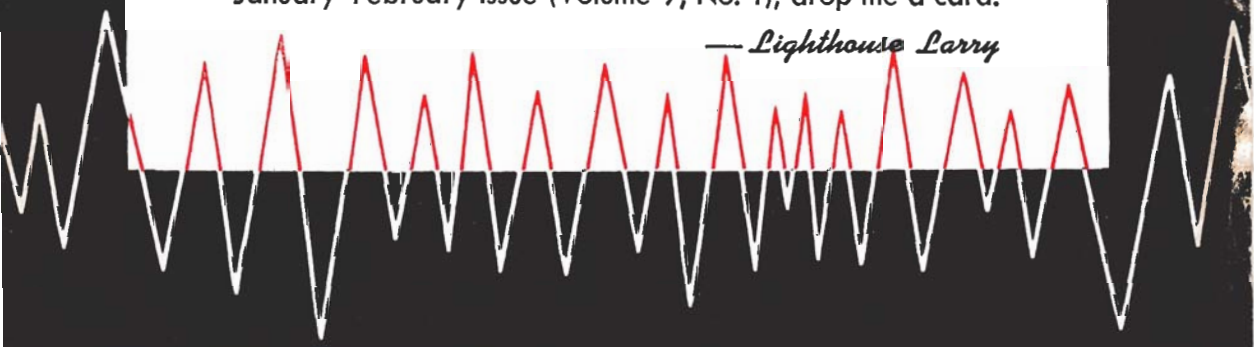

Contents

Two 250 MA Plate Power Supplies.....Page 2
Power Control Unit.....Page 6
Sweeping the Spectrum.....Page 7
Technical Information—6AV5.....Page 8

two power supplies



1500 VOLT **750 VOLT**

The dynamic characteristics of the average amateur power supply are those characteristics which become apparent in the operation of the supply when it is in actual use under average amateur operating conditions. In most amateur operations this means rapid intermittent application and removal of widely varying loads.

Meters will not measure the extensive voltage drops and peaks which are induced by varying the load—and as a result it has become somewhat traditional to regard such voltage excursions as "instantaneous" and "of little consequence."

However, as demonstrated in the tests reported in the last issue of G-E HAM NEWS, these voltage excursions are somewhat more serious than is generally believed. The oscillograms showed that when normal load is applied d-c output voltage will drop to as low as a third of the no-load voltage, then wildly overshoot the no-load level, drop again, and so on—even in a power supply which has an acceptable static regulation figure.

Instantaneous oscillations? That depends on the definition of the word *instantaneous*. As these oscillations were actually photographed on an oscilloscope along with a 60-cycle timing wave, it was shown that the transient oscillations lasted well over a tenth of a second—enough time to competently modulate every CW character and distort at least a fair portion of the first syllable of every word a phone man utters.

Experiments showed the oscillations were directly related to the resonant frequency of the power supply filter—and that the simplest solution to the problem was to lower the resonant frequency by adding capacity to the filter. It was found that addition of sufficient capacity would smooth out the dynamic regulation curve so that it would nearly coincide with the conventional static regulation curve of the supply.

However, high-voltage oil capacitors cost money—lots of it. In order to economize, at least in the sense of not running these newly designed power supplies a great deal higher in cost than conventional supplies of the same ratings, electrolytic capacitors have been specified in series-parallel combinations together with voltage-equalizing resistors.

Electrolytic capacitors generally are, we believe, better than they are cracked up to be in amateur circles. True, they may not last as long as oil capacitors, but as they have been improved considerably since first introduced, it was felt they were well worth trying. Those who still feel squeamish about using electrolytics may, of course, put in oil capacitors of the same value with equally good results. However, it is felt the electrolytics offer more capacity per year, per dollar.

In obtaining the unusually high capacity via the series-parallel methods shown in the circuit diagrams, it is important to make sure that all the equalizing resistors are used. This will insure operation of each capacitor well within its voltage rating.

The can of each electrolytic capacitor is its negative terminal. The capacitors in the series arrangement at the negative (chassis) end of the string may be mounted directly on the chassis with the metal mounting rings supplied with each capacitor. However, the remaining capacitors must be installed with cans insulated not only from the chassis but also insulated from the cans of the capacitors higher up in the string. Careful examination of the circuit diagrams will make this clear.

To provide this insulation a variety of mounting methods will suggest themselves to the builder. The method shown here is to mount capacitors that must be insulated on a piece of textolite which in turn is mounted in a hole of appropriate size cut in the chassis.

In addition, it is strongly recommended that a shield be placed over those capacitors whose cans operate above ground. ***This shield is to protect the operator—not the capacitors!*** Remember that the can of an electrolytic capacitor is generally thought of, subconsciously, as being grounded. The builder may have

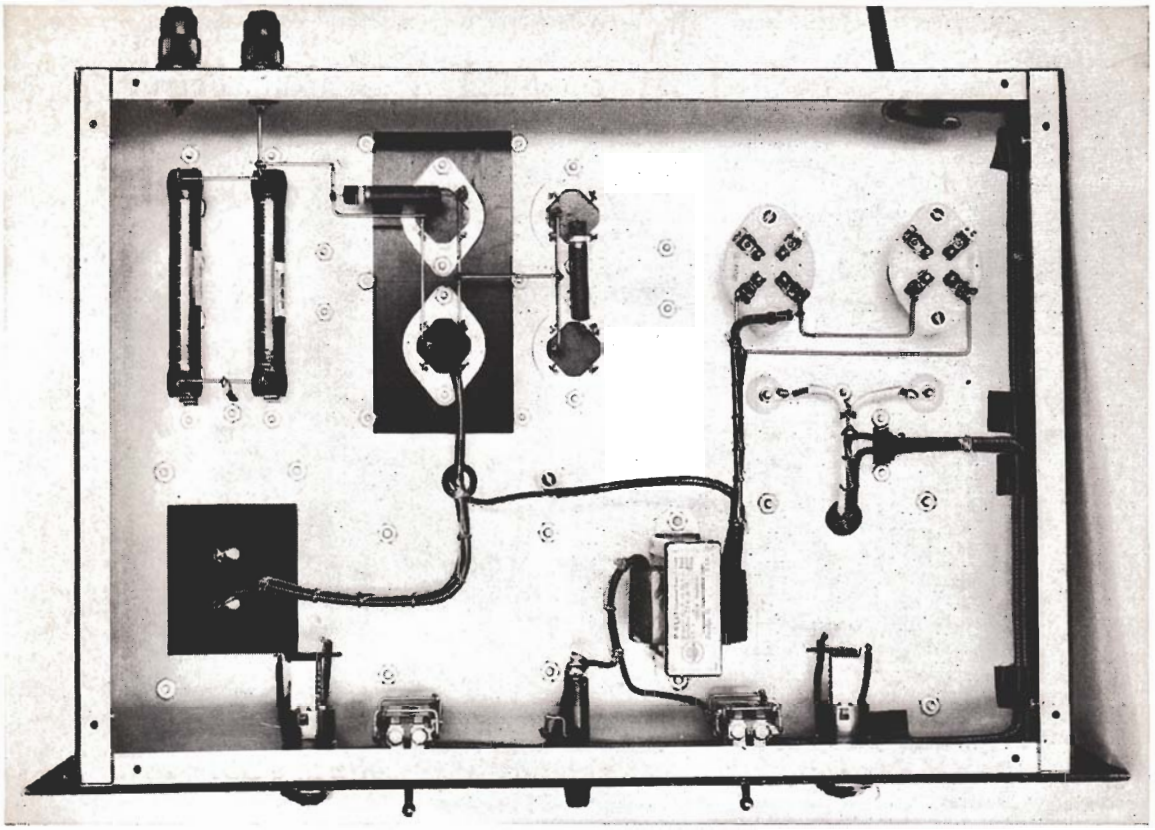

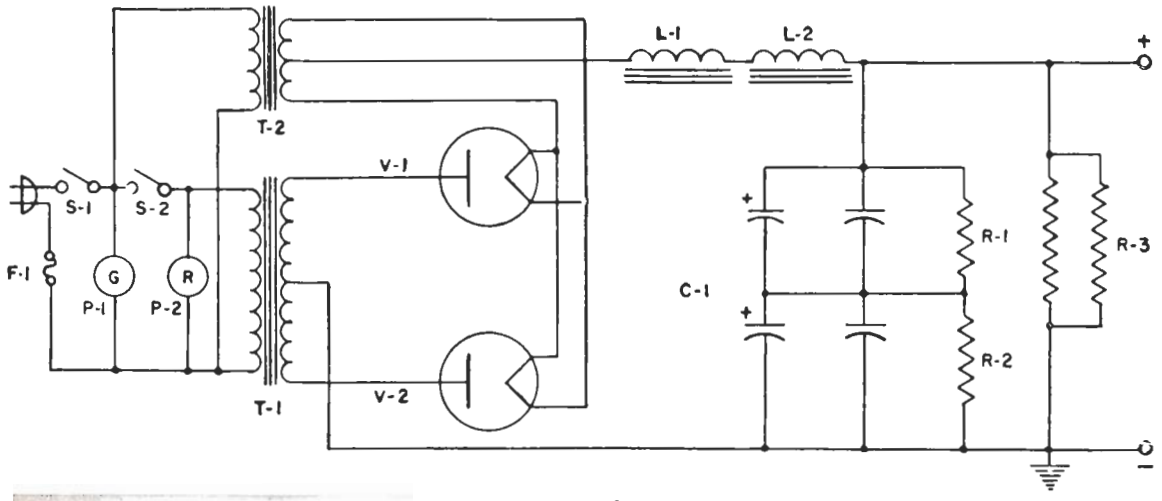

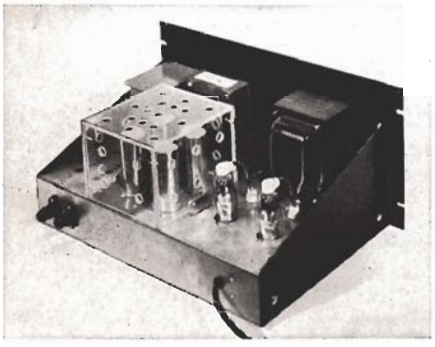

750 v/250 ma Power Supply

S_1, S_2—SPST toggle switch (preferably power type, 12A)
T_1—920-0-920 plate transformer (Stancor PC-8305)
T_2—2.5 v, 5A filament transformer (Stancor P-6133)
V_1, V_2—GL-816
L_1—20/4 h at 30/300 ma, 80 ohms D-C resistance swinging choke (Stancor C-1720)
L_2—20 h, 225 ma smoothing choke (UTC S-31)
C_1—125 or 90 mfd (4 Sprague TVL-1760 or 1850)
R_1, R_2—200,000 ohms, 2 w composition
R_3—50,000 ohms, 25 w (see text)
P_1, P_2—110 v pilot lamp
F_1—5A slow-blowing fuse

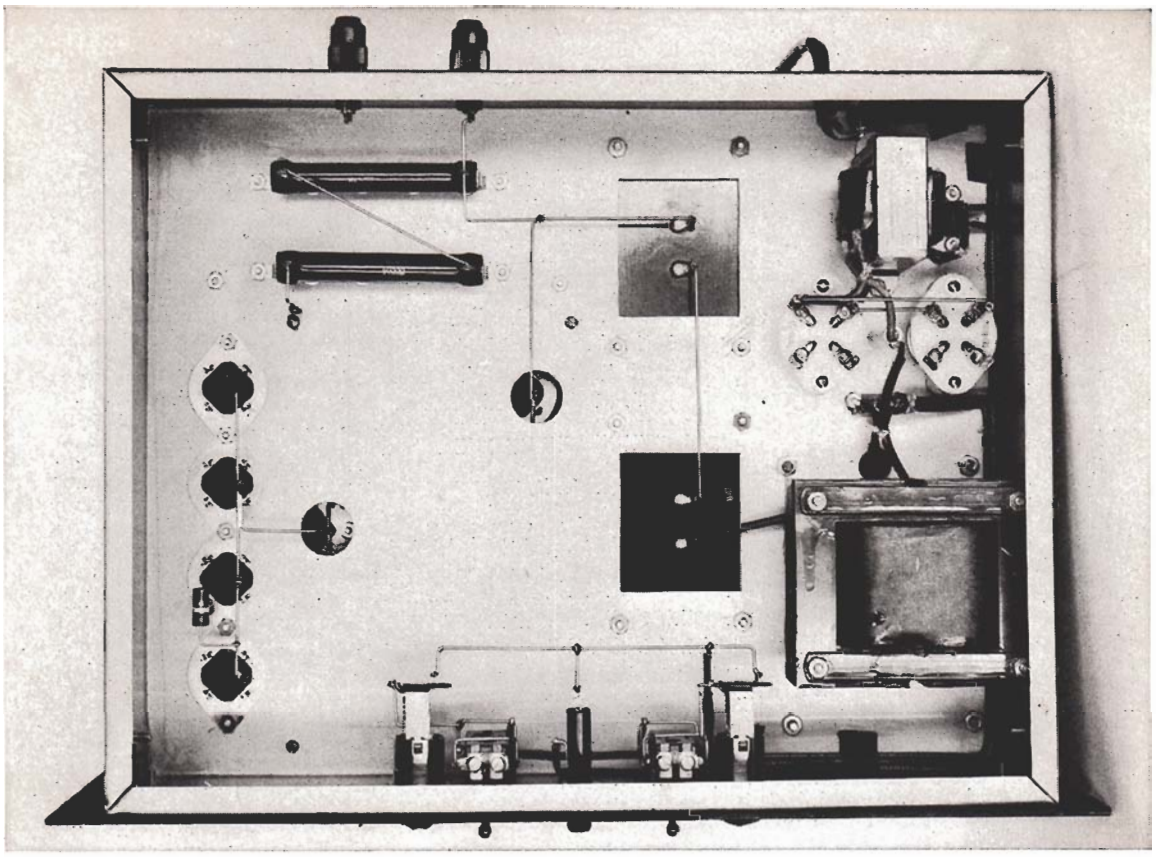

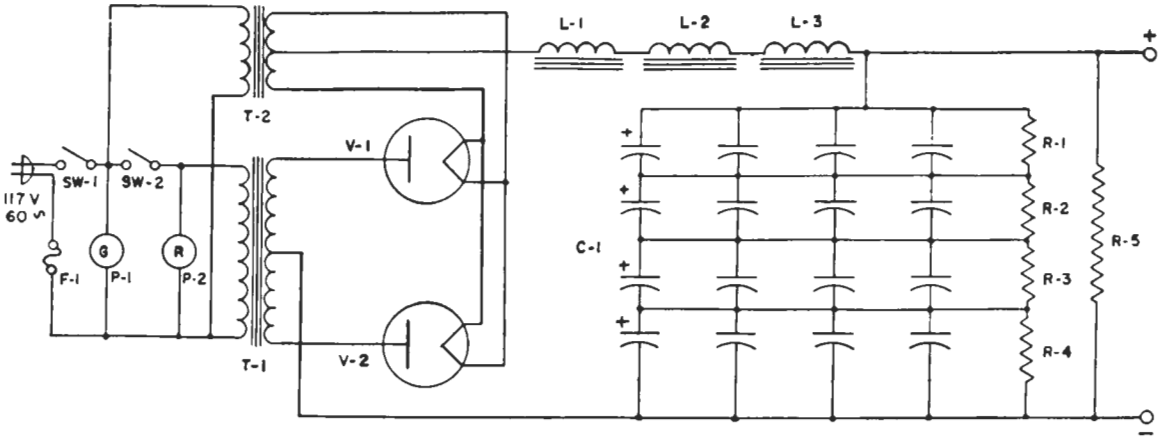

1500 v/250 ma Power Supply

S_1, S_2—SPST toggle switch (power type, 12A)
T_1—1790-0-1790 plate transformer (Stancor PT-8314)
T_2—2.5 v 5A filament transformer (Stancor P-6133)
V_1, V_2—GL-816
L_1—20/4 h at 30/300 ma, 80 ohms D-C resistance swinging choke (Stancor C-1720)
L_2, L_3—20 h, 225 ma smoothing choke (UTC S-31)
C_1—125 or 90 mfd (16 Sprague TVL-1760 or 1850)
R_1, R_2, R_3, R_4—100,000 ohms, 2 w composition
R_5—100,000 ohms, 50 w (see text)
P_1, P_2—110 v pilot lamp
F_1—10A slow-blowing fuse

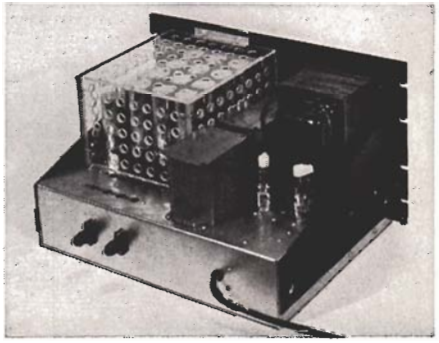

the danger fresh in his mind while he is constructing the power supply and for a relatively short time thereafter. But will he remember, say, a year from now when he opens the rig to service some component that some of those cans are well above ground? And will a visitor to the shack—or the junior operator—inquisitively poking around inside the supply, ever know—*even after he touches one*—that those cans are "hot"?

Take no chances! Time and effort taken *now* to build a shield for these above-ground cans can save a life in the future. The shields shown were fashioned out of sheets of plexiglass drilled with ventilation holes. Such refinement is not necessary, of course. Shields can be fabricated from almost any type of metal. Hardware cloth is inexpensive, easy to handle and when corner joints are soldered it makes a fairly solid shield.

While the sixteen capacitors in the 1500-volt supply may seem like a staggering number, this amounts only to a bank of four-by-four which can occupy as little space as an eight-inch square. Actually, of course, only 12 of these have to be insulated from the chassis.

Remember, the more output capacity, the better the dynamic performance of the power supply will be. If possible, it will be best to use the 125-microfarad capacitors (Sprague TVL 1760, or equivalent). As demonstrated in the previous article, it is difficult to see how one can get too much capacity built into the power supply.

On the other hand, it is important not to overdo the inductance, since the static regulation is proportional to the total d-c resistance of the chokes.

A word about the fact that 225-milliampere smoothing chokes are here used in 250-milliampere power supplies. In a search for chokes of the lowest possible cost and d-c resistance, the design work proceeded on the assumption that the published rating meant, in effect, that this choke has 20 henries inductance at a 225-milliampere load—and might very likely carry additional current. As a test, three of these chokes were put under continuous 250-milliampere loads for 24 hours with no adverse effects. Few amateurs run their power supplies at the so-called "maximum" ratings, but those who regardless of the foregoing wish to put in chokes of higher current rating and are willing to pay the additional cost can do so. The chokes specified in the accompanying circuits were chosen with this in mind—that is, to get as high inductance and as low resistance as possible at the lowest possible cost. If other chokes than those specified are used, the resistance should be checked.

A word about the bleeder resistors used in these two power supplies. To run the resistors as cool as possible, provide a maximum of safety and save space, two methods were tried. In the smaller supply, two 100,000-ohm, 25-watt resistors were used in parallel to obtain the 50,000 ohms required. (While "Dividohms" were used because they were readily available at the time, fixed resistors will serve, of course.) This method doubles the power rating and provides a measure of safety in the event one of the resistors burns out.

Of course, the larger the resistance, the smaller the wire used in a resistor—and the more prone it is to burn out. Frankly, we prefer the second method—employed in the 1500-volt supply—of using two 50,000-ohm, 50-watt resistors in series to obtain the 100,000 ohms of resistance necessary in this power supply. This, too, doubles the power rating and provides as large wire as feasible.

A multitude of refinements can be made on a power supply, of course—one of the most worth while being a safety interlock arrangement in the final installation. However, outside of including fuses, switches and pilot lamps in the accompanying circuit diagrams, refinements have been left to the individual builder to include as suits his purpose. In deviating from the power supplies described herein, however, care should be taken to insure proper insulation at all points.

Wire with insulation suitable for the voltage involved should be used not only in the power supply unit itself, but also in making inter-unit connections to control panels and transmitters. Adequate mechanical strength should be maintained in the mounting of the heavy transformers and chokes. Input and output connectors can be of any type suitable for the voltages concerned.

The two switches included in the diagrams permit separate control of the rectifier filament power and plate power. The first time the supply is used, a filament warm-up of at least one minute is recommended before applying plate power. This will allow the mercury within the GL-816 tubes to distribute itself properly. This also applies whenever the tubes are removed and replaced. In subsequent operation, it is necessary to allow at least ten seconds for heating the filaments before applying plate power. The power supply should be operated only when the tubes are in a vertical position.

When operated within ratings, these power supplies should give the builder the most satisfactory performance ever experienced with any power supply.

One more thing: DON'T LOAD THE POWER SUPPLY WITH YOUR BODY! Be certain to short-circuit the output terminals before working on anything connected with the supply—even when it is turned to the "OFF" position and even if the a-c line cord is pulled out. Remember that 100 microfarads of capacity holds a lot of "soup" and a burned-out bleeder will allow dangerous voltages to remain in the filter for a matter of *minutes* after it is turned off!

NATIONAL CALLING AND EMERGENCY FREQUENCIES

C.W.	'PHONE
3550 kc	3875 kc
7100 kc	7250 kc
14,050 kc	14,225 kc
21,050 kc	21,400 kc
28,100 kc	29,640 kc

During periods of communications emergency these channels will be monitored for emergency traffic. At other times, these frequencies can be used as general calling frequencies to expedite general traffic movement between amateur stations. Emergency traffic has precedence. After contact has been made the frequency should be vacated immediately to accommodate other callers.

The following are the National Calling and Emergency Frequencies for Canada: c.w.—3535, 7050, 14,060; 'phone—3815, 14,160, 28,250 kc.

NATIONAL RTTY CALLING AND WORKING FREQUENCY

3620 kc

PARASITICS

In the "Designer's Corner" of the last issue of G-E HAM NEWS (Volume 9, No. 1) the formula for the resonant frequency should, of course, have read:

$$f = \frac{1}{2\pi\sqrt{LC}}.$$

Designer's CORNER

Some time ago when checking out my SSB transmitter I ran into a dismaying situation.

Checks with a steady audio tone showed the rig was putting out all that could be asked for. But voice peaks measured on the oscilloscope would not come anywhere near the same level. The cause was not easy to determine, but it finally turned out to be tremendous voltage drops in the power supply during a considerable portion of each syllable as a result of filter oscillations. In a more recent test I actually photographed these voltage drops, as pictured in the foregoing article.

The problem is one which involves effective damping of filter resonance or reducing the coupling between the load variations and the resonant system of filter chokes and capacitors—or both—without sacrificing efficiency or static regulation, and without overloading the rectifier tubes or any other power supply component. All this must be done without increasing the cost of the final design appreciably over that of the conventional power supply. It sounds a lot like "eating your cake and having it too," since what we have seen in the oscillograms of Figures 2, 3, 4 and 5 is commonly accepted although rarely suspected performance.

THE SOLUTION

The practical solution of the filter resonance problem involves these basic steps:

1. Reducing the Q of the filter without increasing its series resistance, and
2. Increasing the energy storage in the last filter element.

The first step could be achieved by shunting capacitors and chokes with resistors, but if this is done the peak current handled by the rectifiers would go up, the static regulation would be poorer, and a great deal of power would be wasted in the damping resistors—that is, the efficiency of the power supply would be low.

Since the Q of the choke is $\frac{X_L}{R}$ where X_L is the inductive reactance at a given frequency, and R is the effective series resistance of the choke at the frequency considered, and since the Q of the filter is equal to the Q of the choke (if the capacitor has relatively little effective series resistance), Q can be lowered by decreasing X_L or increasing R. If R is increased the static regulation will suffer as a consequence, so the approach should be through decreased X_L. Since $X_L = 2\pi fL$ a low product of $f \times L$ is desired. In the interest of efficiency and static regulation, practical limits are placed on the value of L, the inductance of the choke, so the factor f is the only one left to be altered.

NEED LOWER FILTER Q

What determines f? The resonant frequency of the filter is the quantity f in question. To a first approximation, $f = \frac{1}{2\pi LC}$, where C is the capacity of the filter condenser with which L resonates. Therefore, the Q of the filter can be lowered by increasing C, and this helps in attainment of the second basic step listed above.

What would have happened if L had been increased by a factor of 9, instead of increasing C by the same factor? The resonant frequency would have been lowered as much, but the series resistance probably would increase by about the same factor (it certainly would if 9 times the number of identical chokes had been used) and the static regulation would be nine times that indicated by Figures 1, 2, 4, 5, 6, and 7, or 84%, a drop from 820 volts, no load, to 131 volts at 200 MA load! The Q would be the same in the filter, but the total performance would be so sadly degraded that such a supply would be valueless except for salvage of parts.

In some cases, the best design would be one in which both the chokes and the condensers were increased in value until suitable dynamic performance was obtained. In high-voltage supplies this begins to pay dividends since the "critical"[1] inductance increases with voltage for a given minimum or bleeder current drain, and high-voltage capacitors begin to get expensive. Static regulation depends on the DC resistance of the chokes (together with the equivalent series resistance due to the plate transformer) but a given total equivalent resistance in the chokes and transformer yields less *percentage* voltage drop as the operating voltage is increased.

TWO POWER SUPPLY DESIGNS

We have designed two power supplies which promise to provide excellent dynamic regulation, good static regulation and good ripple filtering. Best of all, these supplies are not expensive ones. The first supply has a continuous rating of 750 volts/250 MA output for moderate and low power applications, while the second is rated at 1500 volts/250 MA. One nice thing about it all is that the builder may utilize the principle we have explained and proven in order to build other supplies which exhibit equally good (or better) dynamic regulation. Either power supply is ideally suited for CW transmitters, Class B modulators, linear amplifiers (such as the Lazy Linear[2] or the Power Peaker[3]), or any application where the voltage and average current requirements are within the ratings given. The final samples of these two power supplies were not completed by the time this issue of G-E HAM NEWS went to press, but construction details will be given in the March-April issue.

—*W2KUJ*

[1] See G-E HAM NEWS Volume 7, No. 2, page 6; also, the ARRL Handbook. In these treatments only static regulation is considered. Good background material, though.

[2] G-E HAM NEWS Volume 4, No. 4

[3] G-E HAM NEWS Volume 7, No. 5

HOW TO GET G-E HAM NEWS

G-E HAM NEWS may be obtained free from G-E tube distributors—or, for $1 per year G.E. will mail HAM NEWS to your home. Write to: G-E HAM NEWS, Tube Department, General Electric Co., Schenectady 5, N. Y. This subscription plan is available to amateurs only in the United States, Alaska, Hawaii and the Panama Canal Zone. Amateurs in Canada should address requests to Canadian General Electric Co., Ltd., Electronic Tube Marketing Section, 830 Lansdowne Ave., Toronto, Ontario, Canada. In all other countries G-E HAM NEWS may be obtained through International General Electric distributors.

Electronic TUBES

G-E HAM NEWS

Copyright 1957, by General Electric Company

GENERAL ELECTRIC

JULY–AUGUST, 1957

VOL. 12—NO. 4

100-WATT MOBILE POWER SUPPLY

features

- 6- or 12-volt DC input
- Built-in receiver power
- Battery saver circuit
- Over 70% efficient
- 450, 300 and 240 volts DC output

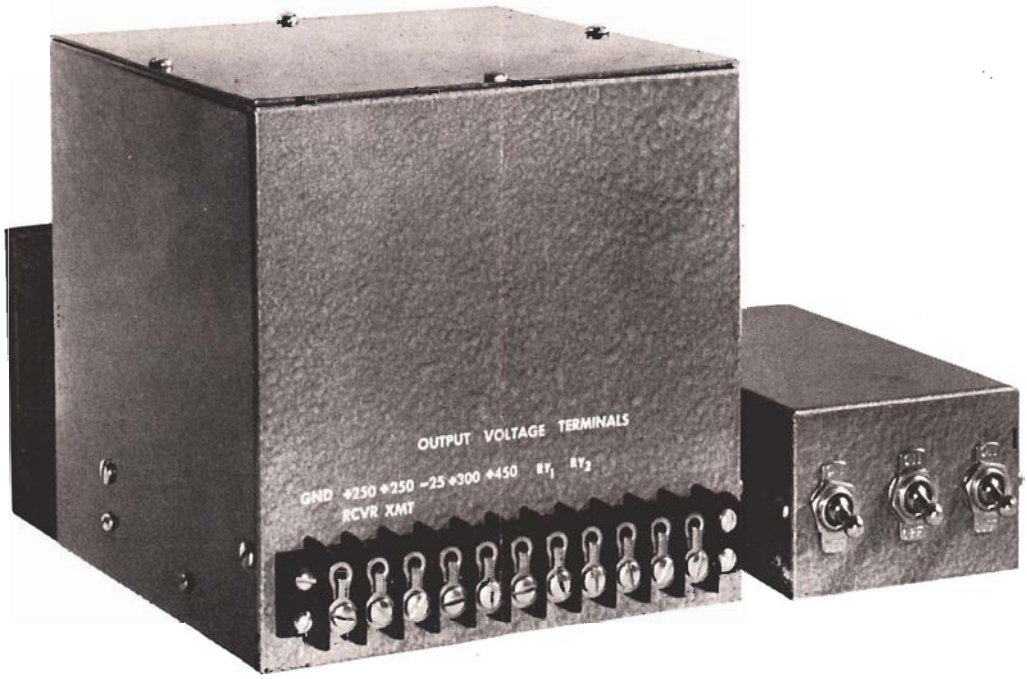

Meet the trend to higher power in mobile amateur communications with this high-efficiency vibrator power supply that will completely power your home-built or commercial mobile station.

—*Lighthouse Larry*

CONTENTS

100-watt Mobile Power Supply . . . . . page 2
Sweeping the Spectrum . . . . . page 7
Mobile Tube Heater Hints . . . . . page 8

100-WATT MOBILE POWER SUPPLY

The popularity of the efficient Mobile/Portable power supply (See G-E HAM NEWS, March-April, 1953, Vol. 8, No. 2, for details) has flooded my mail basket with requests for a similar supply having higher power output. The result—W2GSJ has designed a flexible and compact mobile power supply that delivers about 450, 300 and 240 volts simultaneously for a transmitter, in addition to 240 volts at 90 ma for a mobile receiver. Multiple output voltages make possible a battery-saving "high-low" transmitter power reducing circuit. Any mobileer who has inadvertently run down his car battery while operating for extended periods with the engine off will verify the importance of this feature.

—Lighthouse Larry

DESIGN CONSIDERATIONS

High efficiency generally is the most important factor in the design of mobile radio equipment, obviously because of the limited amount of power available from the average automotive electrical system. Some means of reducing the transmitter power input also is desirable to help prevent running down the car battery when the engine is not running. These features, plus compact size and conservatively rated components have been combined into this mobile high-voltage power supply intended for engine compartment mounting. This location assures short input power leads having low voltage drop, but the 6- x 6- x 8-inch overall power supply dimensions are equally adaptable to under-dash or trunk compartment mounting.

The input power required by this supply is almost directly proportional to the output power drain. No power is wasted in overcoming friction losses, as in a rotary-type mobile high-voltage supply. The only moving parts are tightly sealed inside the vibrator, immune to oil and dirt.

The big demand for efficient and powerful commercial mobile radio communication equipment has led to the development of new heavy-duty vibrator-type high-voltage power supply components. The new split-reed, dual-interrupter type vibrator overcomes the power capacity limitations of previous types. Power supplies capable of delivering up to 100 watts of high-voltage DC output are now possible with a single vibrator.

In addition, this vibrator permits the design of power supplies requiring no component changes for operation from either the 6- or 12-volt DC power systems with which most automobiles are equipped.

Many vibrator power supplies have been, until recently, designed around the synchronous type vibrator. A simplified schematic diagram of such a supply is shown in Fig. 1. One set of vibrator contacts switches the battery current alternately through two opposed primary windings of a transformer, thus inducing a square-wave AC voltage in the secondary. This AC secondary voltage is then rectified by a second set of contacts on the vibrator armature. The limitations of this circuit are low current handling capacity of the vibrator and the need to use a different number of turns on the transformer primary when the battery voltage is changed, e.g., when moving the supply from a car with a 6-volt system to one with a 12-volt system.

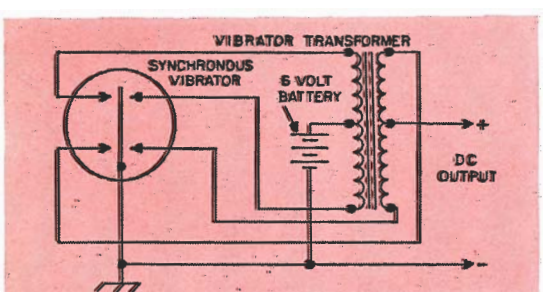

Fig. 1. Simplified diagram of a typical synchronous vibrator and rectifier circuit.

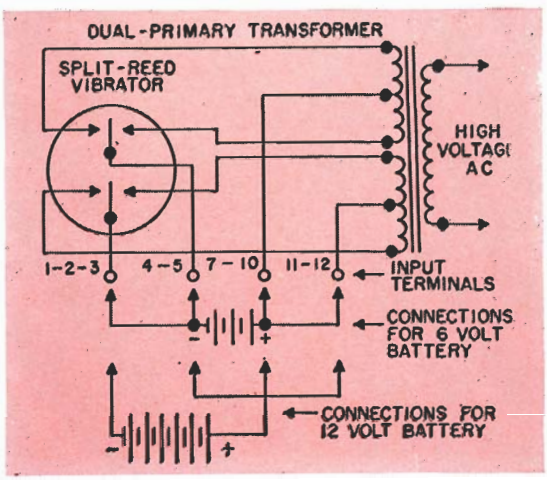

Fig. 2. Simplified diagram of a typical split-reed vibrator and 6/12-volt DC changeover system.

In the split-reed vibrator, two sets of double-throw contacts are electrically isolated from each other, as depicted in Fig. 2. These contacts in currently available split-reed vibrators have much greater current carrying capacity than the usual synchronous or single-interrupter types.

However, a power transformer having two center-tapped primary windings is required. One set of contacts switches the DC current alternately between halves of one primary winding, and the other set simultaneously switches the other winding.

Therefore, the primaries can be connected in parallel for 6-volt operation, or in series for operation from a 12-volt DC supply. No wiring changes are necessary in the supply if the battery is properly connected to the power input terminals. The voltage change-over connections can be made by means of multiple-contact input power connectors, if desired.

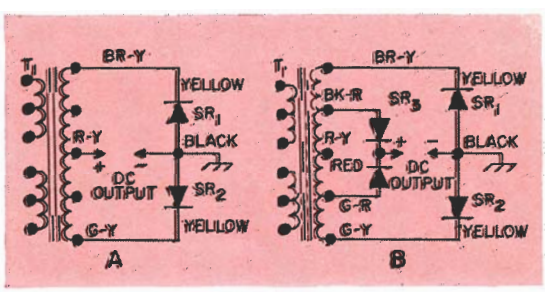

Fig. 3. Simplified diagrams of: A—the full-wave rectifier circuit from which the 250-volt DC output is obtained; and B—the 300-volt DC bridge circuit tapped across a portion of the high-voltage winding on T_1.

Since the vibrator contacts open and close abruptly, the periodically interrupted voltage impressed on the transformer primary has practically a square waveform. The secondary voltage also has nearly a square waveform, and thus the peak voltage on the rectifiers is only slightly higher than the average voltage of the waveform. This means that the rectifiers in a vibrator-type power supply can be operated on a square-wave voltage close to their maximum peak inverse voltage rating, instead of considerably below this rating, as when a sine wave AC voltage is applied to them.

CIRCUIT DETAILS—HIGH-VOLTAGE SECTION

Since the high voltage section of this power supply has three distinct rectifier circuits, simplified diagrams of the rectifier circuits which furnish the 250- and 300-volt outputs are shown in Fig. 3A and 3B. Note that each rectifier has two sections. The parts numbers and transformers color-coded leads are the same as those shown in the complete schematic diagram, Fig. 4. In the 250-volt DC circuit of Fig. 3A, the full transformer secondary voltage [leads BR-Y (Brown-Yellow) and G-Y (Green-Yellow)] is applied to a full-wave rectifier consisting of half of SR_1 and SR_2. These two rectifiers form a portion of all three rectifier circuits. Since the junction between the black rectifier terminals is grounded, the positive 250-volt output is taken from the R-Y (Red-Yellow) transformer lead. This is the opposite of the usual full-wave rectifier circuit. This voltage is filtered by C_{3B}, C_{4A}, C_{4B}, L_1 and a 47-ohm resistor in Fig. 4.

PARTS LIST

C_1, C_2—100-mfd, 450-volt electrolytic (Sprague TVL-1750).
C_3, C_4—dual 40-mfd, 450-volt per section electrolytic (Sprague TVL-2764).
C_5—0.003-mfd, 2500-volt working mica capacitor.
C_6—50-mfd, 50-volt electrolytic (Sprague TVA-1308).
E_1—Vibrator, dual interrupter, split reed; 6-volt coil, 115 CPS reed frequency, 7-pin base (Mallory type 1701, Oak No. V-6853, Radiart No. 5722, or G-E Cat. No. A-7141584-P3).
F_1—30-ampere cartridge fuse and holder.
F_2—15-ampere cartridge fuse and holder.
J_1—12-pin male chassis plug (Cinch-Jones No. P-312-AB).
J_2—8-pin male chassis plug (Cinch-Jones No. P-308-AB).
J_3—4-pin male chassis plug (Cinch-Jones No. P-304-AB).
J_4, J_5—4-pin female socket (Cinch-Jones No. S-304-AB).
L_1—1.5-hy, 100-ma filter choke, 150 ohms maximum DC resistance.
L_2—7-uh, 1-ampere RF choke (Ohmite Z-50).
L_3—120-uh, 10-ampere filament RF choke.
P_1—12-pin female cable socket (Cinch-Jones No. S-312-CCT).
P_2—8-pin female cable socket (Cinch-Jones No. S-308-CCT).
P_3—4-pin female cable socket (Cinch-Jones No. S-304-CCT).
P_4, P_5—4-pin male cable plug (Cinch-Jones No. P-304-CCT).
R_1—10-ohm, 10-watt adjustable resistor.
Ry_1, Ry_2— two-pole, double-throw relay, 6-volt DC coil (Advance No. MG/2C/6VD or PC/2C/6VD; Potter & Brumfield MR-11-D 6V or KL-11-D 6V; Guardian No. 200-6D coil and 200-2 contact assembly; Ohmite DOSX-158T, DOX-145T or CRUX-199T).
Ry_3—single-pole, single-throw relay, 6-volt DC coil, 30-ampere contacts (auto headlamp or equivalent).
S_1, S_2, S_3—single-pole, single-throw switch.
SR_1, SR_2—2-section selenium rectifier, 150 ma, 380 volts peak inverse per section, connected for doubler (G-E pt. No. A-7144141-P2); or, two 150-ma, 380-volt selenium rectifiers in series (Federal No. 1005-A).
SR_3—2-section selenium rectifier, 150 ma, 380 volts peak inverse per section, connected for center tap (G-E No. A-7144141-P1); or two Federal No. 1005A rectifiers with red terminals connected together.
SR_4—150-ma, 64-volt peak inverse selenium rectifier (G-E No. A-7140806-P1 or Federal No. 1015).
T_1—Vibrator power transformer, dual center-tapped 6-volt primaries; secondaries; 420 volts, tapped at center and 150 volts each side of center, 300 ma; 20-volt, 150-ma bias voltage winding (G-E No. B-7486449-P1).
TS_1—8-terminal barrier terminal strip (Cinch-Jones No. 8-141-Y).

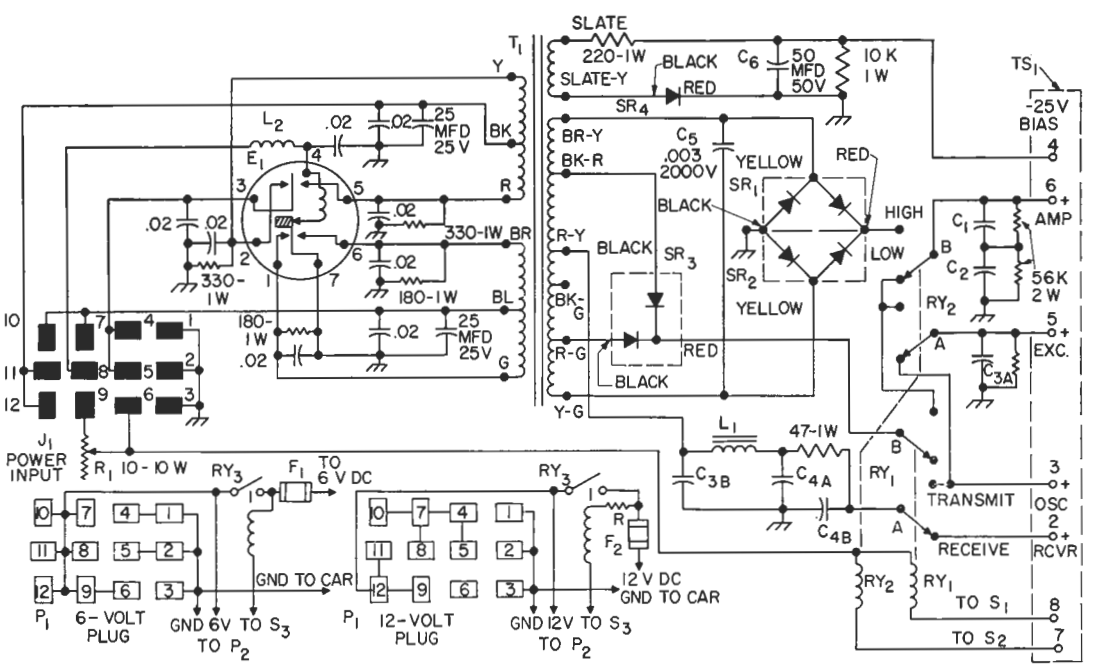

Fig. 4. Complete schematic diagram of the mobile power supply. Separate 6- and 12-volt power input plugs and cables are shown at the bottom of the diagram.

The 300-volt DC output is obtained from a bridge rectifier circuit at Fig. 3B consisting again of one-half of SR_1 and SR_2 in the legs connected to ground, plus SR_3 in the two bridge legs from which the positive voltage is obtained. During one-half of each AC cycle, the voltage across the BK-R (Black-Red)—Y-G section of the high-voltage winding is rectified by the upper section of SR_3 and SR_2 in the bridge. On the other half of each AC cycle, the voltage between transformer taps G-R (Green-Red) and BR-Y is rectified by the lower section of SR_3, and SR_1. The transformer output voltage from these taps is about 300 volts AC.

Another bridge rectifier circuit is employed for the 450-volt DC output, again with the two grounded legs of the rectifier circuit passing through SR_1 and SR_2. The other two sections on these rectifiers form the legs of the bridge from which the positive DC voltage is taken at the junction of the red terminals.

Since there is very little ripple voltage in the DC output from the rectifiers, a single 40-mfd, 450-volt capacitor, C_{3A}, on the 300-volt output was adequate. Two 100-mfd, 450-volt capacitors, C_1 and C_2, were placed in series across the 450-volt output.

A "transmit-receive" power switching circuit is included in the power supply so that the 250-volt output may be applied to a mobile receiver or converter. This is accomplished with one pair of contacts on a double-pole, double-throw relay, RY_1, which also turns on the 300-volt output to a transmitter exciter when its relay coil is energized. A second double-pole, double-throw relay, RY_2, turns on the 450-volt DC output to a transmitter final amplifier when its coil is energized. It also provides the power-reducing feature when the coil is not energized, by applying 300 volts to the 450-volt output terminal, and 250 volts to the 300-volt output terminal. A single-pole, double-throw relay may be substituted for RY_2 if the power-reducing feature is desired only on the 450-volt circuit.

Since all rectifiers have high voltage on them continuously when the supply is operating, the idling current flow through the unused rectifiers when receiving was reduced to almost zero by disconnecting them from the filter capacitors and bleeder resistors with RY_1 and RY_2. Leaving C_1, C_2 and C_{3A} connected to these rectifiers would result in an unwanted continuous current drain through the rectifiers. This does not apply to the 250-volt output, from which power is drawn both when receiving and transmitting.

A special 20-volt secondary winding on the transformer provides transmitter negative bias through rectifier SR_4, filtered by a 50-mfd, 50-volt capacitor, C_6.

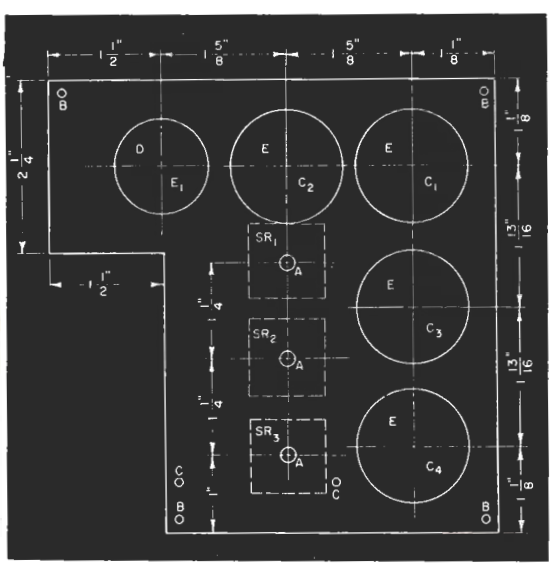

Fig. 5. Drilling diagram of the chassis plate on which most components are mounted. Small holes should be drilled to suit the mounting holes of parts actually used.

DRILLING LEGEND—"A" drill-No. 26 for rectifiers; "B" drill—No. 18 for angle brackets; "C" drill—No. 18 for choke L_1; "D" socket punch—1 ¼ inches in diameter for vibrator socket; "E" socket punch—1 ½ inches in diameter for filter capacitors.

CIRCUIT DETAILS—LOW-VOLTAGE SECTION

The basic circuit of the split-reed vibrator and the series-parallel input voltage change-over on the transformer primaries already has been described under "DESIGN CONSIDERATIONS." In this power supply, changing from 6- to 12-volt input was accomplished with a 12-pin Cinch-Jones "300" series power plug and socket, P_1 and J_1, respectively.

A separate low-voltage input cable is used for each voltage, as shown in Fig. 4. Leads from P_1 to the main power relay, RY_3, should be made as short as possible to reduce the voltage drop. This is particularly true with a 6-volt power source, where a cable resistance of only 0.04 ohms will cause a 1-volt drop when the power supply is running at full load.

The 6-volt input plug connects the alternate pairs of vibrator contacts, and halves of the transformer primaries, in parallel. For 12 volts input, the low-voltage current path is as follows, assuming that the vibrator contacts between pins 7 and 1, and pins 3 and 2, are closed: The G (Green) lower primary lead is grounded through vibrator pins 1 and 7; the BL (Blue) center tap lead runs through vibrator pins 3 and 2 to lead Y (Yellow) on the upper primary; and the BK (Black) center tap lead is connected through pins 11 and 12 on J_1 to the ungrounded 12-volt lead.

The proper voltage for the 6-volt vibrator coil, connected to pin 8 on J_1, also is obtained by changing connections on P_1. With a 6-volt input, this voltage is applied directly to pin 8. Attaching the 12-volt plug connects pin 8 on J_1 to pins 7 and 10. Thus, 6 volts for the vibrator is obtained from the mid-point of the series-connected transformer primaries.

Similarly, 6 volts for the coils of relays RY_1 and RY_2 is supplied from the 6-volt power cable through pin 6 on J_1. With the 12-volt plug, a voltage dropping resistor, R_1, is connected in series with the relay coils, and the other end of the resistor receives 12 volts through pin 9. If the power supply is to be operated exclusively from a 12-volt supply, relays having 12-volt coils may be substituted, thus eliminating R_1.

There usually is some sparking at the vibrator contacts while they are operating, so several components were included in the circuit to filter and suppress any noise or "hash" that results from this sparking. These parts, also shown in Fig. 4, include eight 0.02-mfd 500-volt disc ceramic and two 25-mfd electrolytic capacitors; plus two 180-ohm and two 330-ohm, 1-watt resistors; and RF choke L_2.

COMPONENT PARTS

The heart of this power supply is the vibrator transformer designed especially for General Electric two-way mobile radio equipment. It is readily available as a replacement part from many of the 3000 G-E mobile radio service stations, or directly from the address listed below.[1] Similar transformers are made for other makes of mobile radio gear. Or, a transformer with a similar high-voltage winding can be rewound with the two center-tapped primary windings.

Communications type vibrators, such as those listed in the "PARTS LIST," are usually stocked by radio parts distributors. The G-E industrial type 2-section

[1]The General Electric parts should be ordered from: Mr. Donald Clark, General Electric Co., Product Service Renewal Parts Section, Communication Products, 509 Kent Street, Utica, N. Y. Current prices, plus shipping charges are as follows: Transformer T_1, $14.70; vibrator E_1, $5.75; rectifiers SR_1, SR_2, and SR_3, $7.75 each; rectifier SR_4, $1.40.

selenium rectifiers used in the model power supply may be obtained from the same source as the transformer. Two standard replacement type selenium rectifiers may be substituted for each of the 2-section units, if desired, by observing the polarities.

The relays recommended for RY_1 and RY_2 have well-spaced contacts that will break the high voltage without excessive arcing. Any available type with the proper coil voltage may be used if they will withstand the voltage. All filter capacitors in the supply are operated well below maximum rating so that any probable combination of high temperatures and high input voltage will not exceed the rated working voltage.

MECHANICAL DETAILS

All components except the power transformer were enclosed inside a 6- x 6- x 6-inch aluminum utility box (Bud AU-1039) for protection from the dirt and oil that collects in an automobile's engine compartment. A sub-chassis made from $\frac{1}{16}$-inch thick sheet aluminum was cut and drilled according to the drilling diagram, Fig. 5. Additional holes should be drilled in the plate to match those on RY_1 and RY_2. If both relays will not fit into the space shown in the top view, Fig. 6, the filter choke, L_1, or one of the relays may be fastened to the side wall of the box. All chassis drilling and the cutouts for the transformer, power input socket, and output terminal strip, TS_1, should be completed before the chassis is permanently fastened in place with small angle brackets 2 inches from the bottom of the box.

One electrolytic capacitor, C_1, is assembled on the insulated mounting plate furnished with these capacitors. When twisting the locking lugs, be sure they do not come near the metal chassis. The can of this capacitor is more than 200 volts above ground and was insulated with a fiber sleeve.

The large seven-pin tube socket into which the vibrator plugs should have ground lugs on the metal mounting plate for the by-pass capacitors which are later wired onto the socket. Or, two soldering lugs may be placed under each mounting screw for this purpose. If the power supply is to be operated with the chassis in a vertical plane, pins 1 and 4 should be in a vertical plane. The smaller components below the chassis should not be installed until parts above the chassis have been assembled and wired.

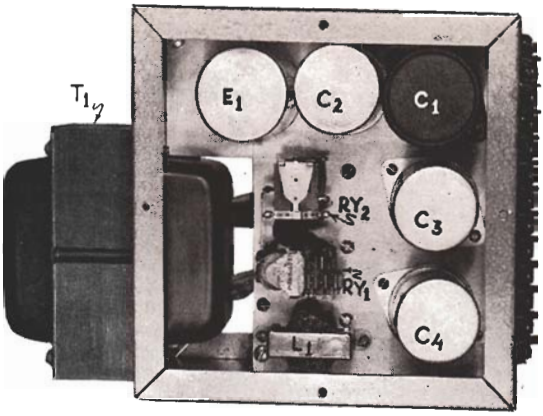

Fig. 6. Top view of the power supply interior. If larger relays are used, RY_1 can be mounted on the chassis plate, and RY_2 on the box side wall above choke L_1.

The transformer primary leads are wired to the input plug and vibrator socket with shortest possible leads before the by-pass capacitors and other parts are mounted on the vibrator socket. The other small parts, including R_1, are installed in the locations shown in the bottom view photograph, Fig. 7. The bias voltage rectifier and filter components are mounted on the box side wall right below the three selenium rectifiers visible in this view. The buffer capacitor,

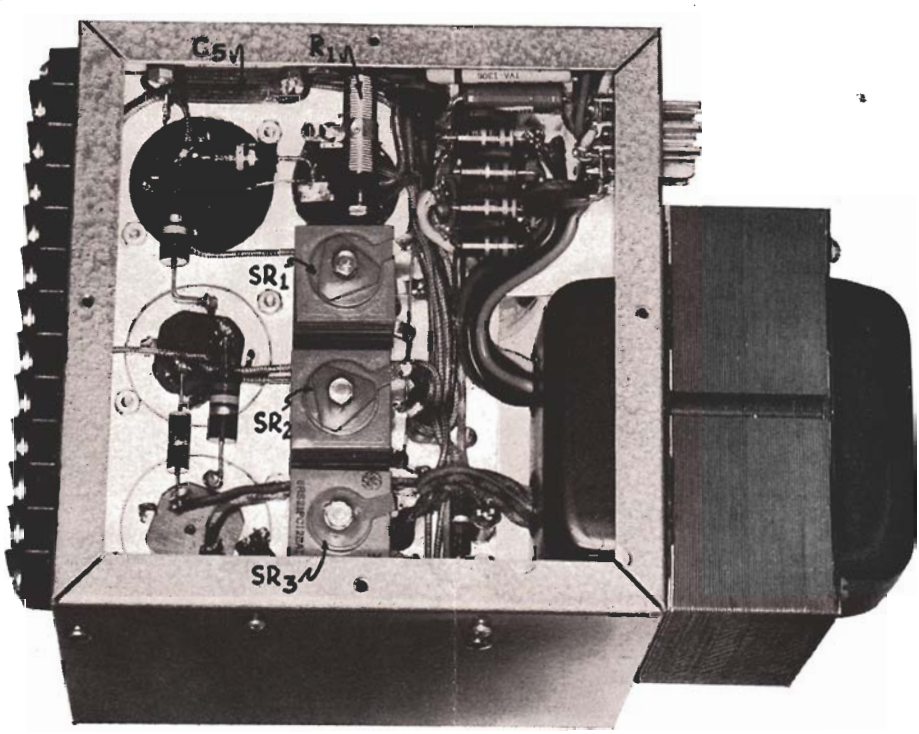

Fig. 7. Bottom view of the power supply. The vibrator socket is hidden by the resistors and disc ceramic capacitors in the hash filter. RF choke L_2 and the 25-mfd capacitors can be seen just above these parts. The bias rectifier and filter is fastened to the box side wall at the bottom of the picture.

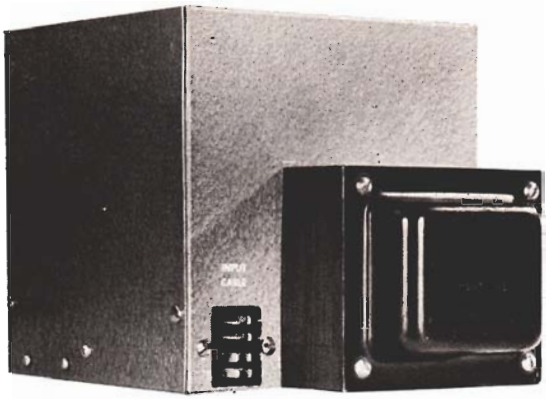

Fig. 8. End view of the power supply showing locations of the power input plug, J_1, and the power transformer.

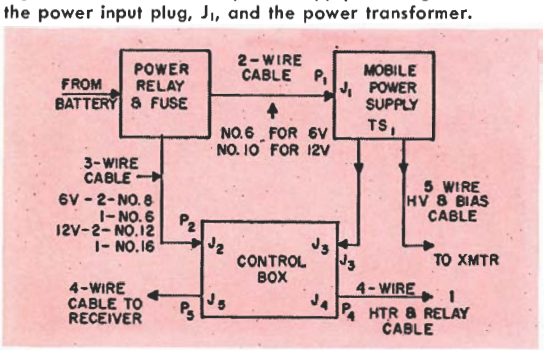

Fig. 9. Block diagram of suggested power and control cables and a switching system for the mobile power supply, when similar circuits ore not already available.

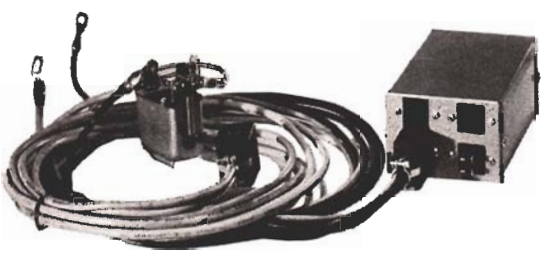

Fig. 10. View of the suggested low-voltage cable harness, main power relay, RY_3, and the control box wired according to Fig. 11 below.

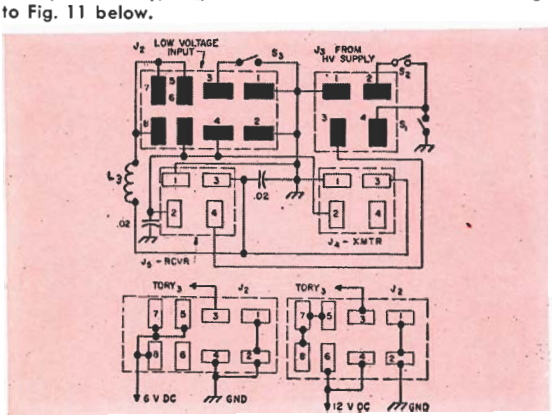

Fig. 11. Schematic diagram of a suggested control box for the mobile power supply, including power plugs for changing tube heaters for 6- or 12-volt operation. A push-to-talk button can be connected across S_1.

C , connected across the transformer secondary, can be seen in the upper left corner. All parts should be securely fastened to withstand vibration.

The power supply can be constructed on a standard chassis, if desired, or even in a small steel amplifier foundation unit made by several radio chassis manufacturers. The parts layout is not critical, except that the vibrator, input power socket, and transformer primary leads should be closely grouped to minimize hash radiation from the vibrator circuit.

INSTALLATION

This power supply may be operated in conjunction with the suggested mobile power system shown in the block diagram, Fig. 9. Note that a separate cable is recommended for the heater power circuit for two reasons. First, this minimizes heater voltage variations when the high voltage supply is switched from receiving to transmitting; second, the possibility of vibrator hash pickup by the heater wiring is minimized. A picture of the low-voltage cable harness used with this power supply is shown in Fig. 10.

Provision has been made for changing the mobile receiver and transmitter heater power circuits for either 6- or 12-volt operation in the schematic diagram of a suggested power control box, Fig. 11. An 8-contact Cinch-Jones plug and socket, P_2 and J_2, automatically makes the proper connections when the 6- or 12-volt plug is attached. (See "Mobile Tube Heater Hints" on page 8 for the suggested series-parallel heater circuit.) High voltage for the receiver, plus the control switch circuits for RY_1 and RY_2, are brought into the control box from the high voltage supply through J_3. The power cable for the receiver is then plugged into J .

The high voltage leads for the transmitter should be run directly from the power supply, but the transmitter heater power and "transmit-receive" control circuit may be run to the transmitter through a cable plugged into J_4. Three switches were included on the control box, with S_1 as the "transmit-receive" switch; S_2 as the "high-low" transmitter power control; and S_3 as the main power switch for RY_3.

If similar control circuits and power wiring already are available in your mobile radio installation, they may be used instead. Relay RY_3 should be mounted very close to the point from which power is taken from the automotive electrical system.

OPERATION

First test the power supply at half input voltage, but with full voltage applied to the vibrator coil. This is accomplished by temporarily removing the jumper between pins 7 and 8 on the 12-volt power plug, P_1. Pin 8 is then jumpered to pin 9. The cable is then attached to J_1 on the power supply and to a 6-volt DC power source. Approximately half the rated voltages should be measured at the output terminal strip if the power supply has been properly wired.

Replace the original connections on the 12-volt power plug and test the supply with full input voltage. A 2500-ohm, 100-watt resistor, or four 25-watt, 115-volt lamp bulbs in series, makes a good load resistance. The output voltages should measure close to 450, 300 and 240 volts under load.

The power supply may be checked for vibrator hash simply by connecting it to any all-band receiver having a power plug for battery-powered operation. Additional 0.02-mfd by-pass capacitors at RY_3, the output terminal strip, and control box should eliminate any hash still present. If not, try disconnecting the heater power lead at RY_3 with the high voltage supply running. If the hash disappears before the tube heaters cool off, the optional heater circuit RF choke, L_3, should reduce any hash reaching the receiver via the heater power leads. Every experienced mobileer will agree that noises in each mobile radio installation usually must be eliminated on a "search-and-filter" basis.

MOBILE TUBE HEATER HINTS

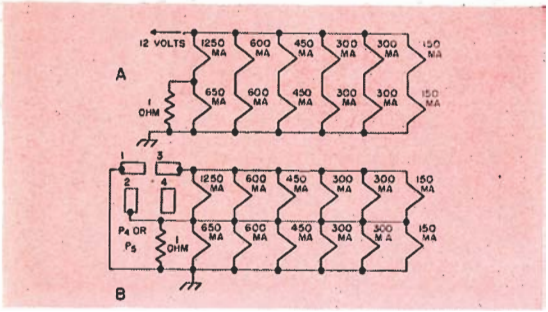

Fig. 12. Mobile tube heater circuits

Maximum versatility in amateur radio mobile radio equipment is possible only when the tube heater circuit is designed for operation from either a 6- or 12-volt supply. There was no such problem in the good old days when only 6-volt automotive electrical systems were popular, since the usual practice was to connect a string of 6-volt tube heaters in parallel.

One approach to operating 6-volt tube heaters on 12 volts is to select pairs of tubes in the equipment having identical heater current ratings and connect them in series. This results in the circuit of Fig. 12A, representing tube heaters with several current ratings. The main disadvantage of this circuit is that an unequal voltage may appear across each tube in a series string when the heater resistances at operating temperature are not the same. Thus, the higher resistance tube heater will operate at higher than the rated voltage.

A pair of tubes having dissimilar heater current ratings is shown at the left to illustrate how a current-balancing resistor is connected across the tube having the lower current drain. Since 600 ma flows through this resistor, a tube heater requiring this current could be substituted for the resistor. These circuit values apply to a mobile transmitter using a 6AG7 and a GL-6146 with the heaters in series.

The disadvantages of this circuit are overcome by connecting mobile radio equipment tube heaters in the circuit shown at Fig. 12B. The 6-volt tube heaters are divided into two groups having the same total current drain, each of which is then connected in parallel. One heater lead is made common to both strings, and the chassis can be used for the grounded lead in the lower string, if desired.

For 6-volt operation, pins 1 and 3 on $P_{4/5}$ are connected together, and pin 2 runs to the ungrounded side of the 6-volt power source. For 12-volt operation, the ungrounded 12-volt source is connected to pin 3 on the plug, and no external connection is made to pin 2. Pin 1 connects to the grounded side of the power source for both voltages. This circuit tends to cancel out the effects of differences in the heater resistance of individual tubes. In addition, the current drain of both strings can be precisely balanced with an adjustable resistance across one heater string.

Keep this circuit in mind when you build your next mobile transmitter, converter, receiver, or when reworking your present mobile gear to operate from the 12-volt electrical system in that new car. It's practically the standard heater circuit for modern commercial two-way radio equipment.

Electronic TUBES

G-E HAM NEWS

Available FREE from G-E Electronic Tube Distributors

published bi-monthly by
ELECTRONIC COMPONENTS DIVISION
GENERAL ELECTRIC
Schenectady 5, N. Y.
In Canada
CANADIAN GENERAL ELECTRIC CO., LTD.
189 Dufferin St., Toronto 3, Ontario

E. A. NEAL, W2JZK—EDITOR

Printed in U.S.A.

VOL. 12—NO. 4

JULY–AUGUST, 1957

Form 3547 Requested

Electronic TUBES

G-E HAM NEWS

Copyright 1957, by General Electric Company

GENERAL ELECTRIC

SEPTEMBER–OCTOBER, 1957

VOL. 12—NO. 5

DUAL-VOLTAGE POWER SUPPLIES

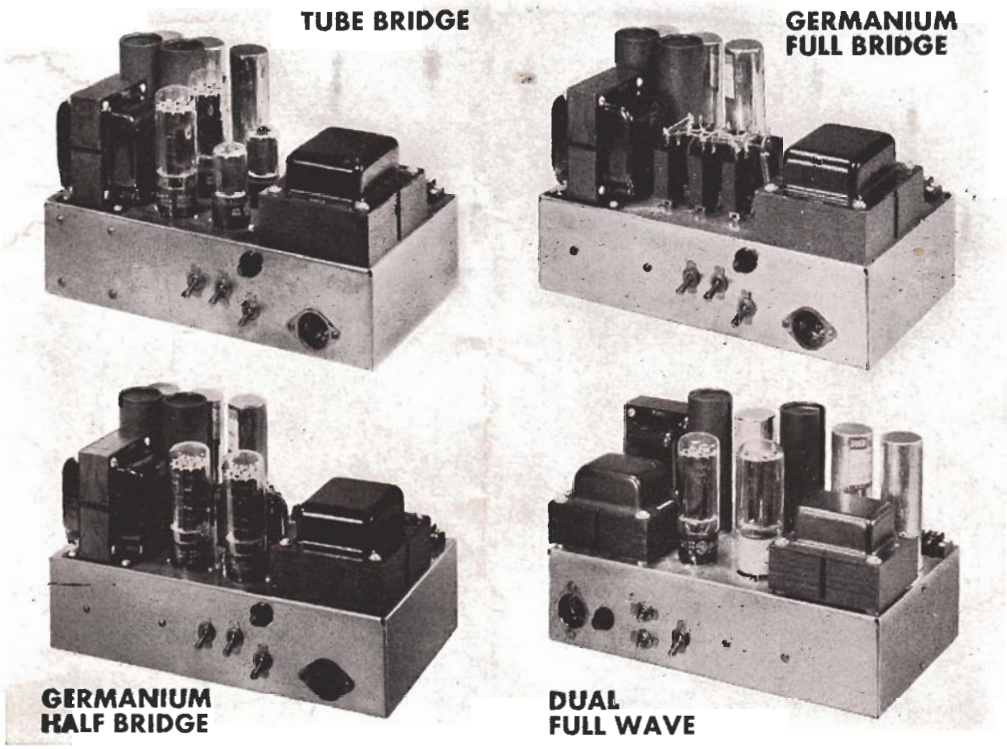

Need two high voltages for your medium power transmitter? Build a dual-voltage power supply from one of these circuits, tailored to the contents of your junk box, or from inexpensive television receiver replacement components.

—Lighthouse Larry

CONTENTS

Dual-Voltage Power Supplies ..... page 2
Sweeping the Spectrum ..... page 7
Technical Information—G-E Resistors ..... page 8

DUAL-VOLTAGE POWER SUPPLIES

Preparation of a simple and stable 100-watt transmitter for the November–December, 1957 issue demanded an equally simple dual-voltage power supply. Our solution: Combine plentiful replacement-type components in bridge and full-wave rectifier circuits, smooth with a high-capacity filter, and package compactly in a corner of the transmitter cabinet.

—Lighthouse Larry

GENERAL CIRCUIT DETAILS

A majority of amateur transmitters in the medium power class (60 to 200 watts) require at least two different high voltages, usually about 300 volts for the oscillator and intermediate stages, and 600 to 750 volts for the power amplifier.

These voltages may be obtained by any of three means: A separate power supply for each high voltage required; or single power supplies having either a transformer with a tapped high-voltage winding feeding separate full-wave rectifiers; or a single bridge rectifier with the lower DC voltage obtained from a center tap on the high-voltage winding. The two latter circuits will be described here.

As the simplified schematic diagram of a vacuum tube bridge rectifier in Fig. 1 shows, the cathodes of diode tubes A and B, connected to opposite ends of the high-voltage winding, each should be powered from a separate filament transformer having adequate insulation. In addition, a third filament transformer is required for diodes C and D, having their cathodes connected together. Thus, tube bridge rectifiers with directly heated cathodes have complex heater circuitry.

Development of rectifier tubes having separate cathodes electrically isolated from the heater has made possible tube bridge rectifiers with fewer filament transformers. Publication of the "Economy Power Supply" circuit[1] a few years ago suggested this innovation, in addition to more efficient utilization of replacement type radio and television receiver power transformers in dual-voltage power supplies. Type 6X5-GT indirectly-heated full-wave rectifier tubes were suggested for V_1 and V_2 in the original "Economy" type bridge circuit, shown in Fig. 2A. The 6X5-GT may be operated with the cathode 450 volts positive or negative with respect to the heater.

Since the DC output current rating of the 6X5-GT is only 70 milliamperes, connecting each pair of tube plates in parallel still limits the maximum output current of the original economy power supply to about 140 milliamperes. By substituting a pair of similar full-wave rectifier tubes, 6AX5-GT's, for the 6X5-GT's, the same circuit is capable of supplying up to 300 milliamperes total current when operated into a choke input filter with up to 700 volts AC applied to the bridge rectifier.

A single filament transformer, T_3, powers both tube heaters, but three precautions should be taken to keep the heater—cathode voltage on V_1 and V_2 within the rating. First, one side of the heater circuit should be connected to the center tap on the high-voltage transformer winding. Second, the high-voltage transformer, T_1, should not be turned on until the heaters of V_1 and V_2 reach operating temperature. Third, V_1 and V_2 should be hot before heater voltage is applied to V_3, the full-wave rectifier forming the other two legs of the bridge circuit.

In the circuit of Fig. 2A, V_1 and V_2 are heated by T_3 when the main power switch, S_1, is closed. Primary power for the high-voltage transformer, and the filament transformer for V_3, T_4, should be applied by closing S_2 at least 30 seconds later than S_1. If S_2 is closed immediately after S_1, a negative voltage will appear at the "HV/2" output terminal until the heaters of V_1 and V_2 warm up. Heater power for V_3 may be taken from T_1 if a suitable winding is available.

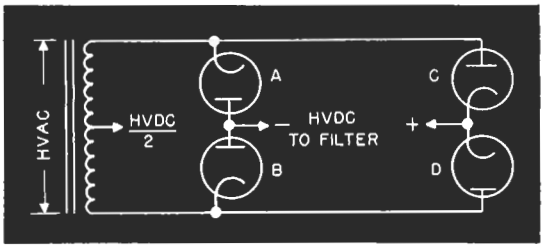

Fig. 1. Basic schematic diagram of a bridge rectifier circuit using four single diode tubes.

A single 5U4-GB or 5R4-GYA will suffice for V_3 with maximum current drains of 250 milliamperes or less. If sufficient heater power is available, two 5U4-GB, 5R4-GYA or 5V4-GA tubes may be connected in parallel to reduce the voltage drop through the tubes.

Choke input filters, as shown in Fig. 2B, are recommended for both the high-voltage and half-voltage outputs, even though the output DC voltage under full load will be about 10 percent lower than with a capacitor input filter. However, the peak current through the rectifiers is much lower with choke input.

Four 125-mfd, 450-volt electrolytic capacitors, C_1 to C_4, connected in a series—parallel circuit, are desirable for good dynamic voltage regulation, as described in "ABOUT POWER SUPPLIES" (See G-E HAM NEWS, January-February and March-April, 1954, Vol. 9, Nos. 1 and 2, for details). These capacitors, plus a single smoothing choke in each filter, reduce the AC ripple appearing on the output voltage to a fraction of one percent. Additional low-resistance filter chokes may be connected in series with L_1 to further reduce the resonant frequency of the filter circuit.

A simple circuit by which the primary voltage applied to T_1 may be adjusted also is shown in Fig. 2A. All heater windings on T_1 are connected in series (the windings should be in phase) and placed in series with the primary. The actual voltage on the primary will then be either higher or lower by the total voltage of the heater windings. A single-pole, double-throw switch, S_3, applies normal primary voltage with the switch arm as shown, or alternate primary voltage with the switch arm in the "up" position.

If single 6.3- and 5-volt windings are connected in series, the primary voltage can be changed to about 10 percent above and below normal. A 15 percent change either way will result from connecting one 5-volt and two 6.3-volt windings all in series. It is thus possible to boost the output voltage of a transformer high-voltage winding 50 to 80 volts if desired. Or, the high voltage can be reduced to a suitable value, if it is too high, by reversing the connections to the heater windings. However, the AC high voltage from T_1 should not exceed the rating of the rectifiers under any conditions.

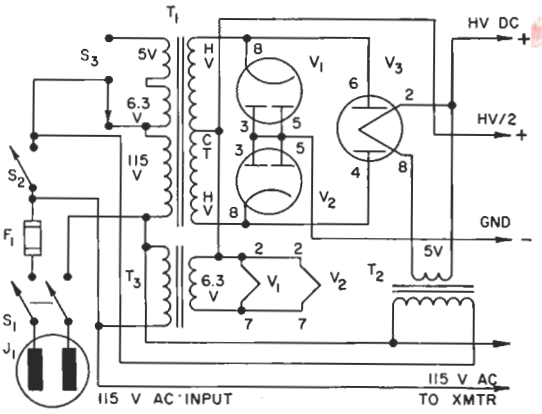

Fig. 2A. Schematic diagram of the "Economy" bridge rectifier circuit. Note that the heater supply winding for V_1 and V_2 is connected to the high-voltage-winding center tap.

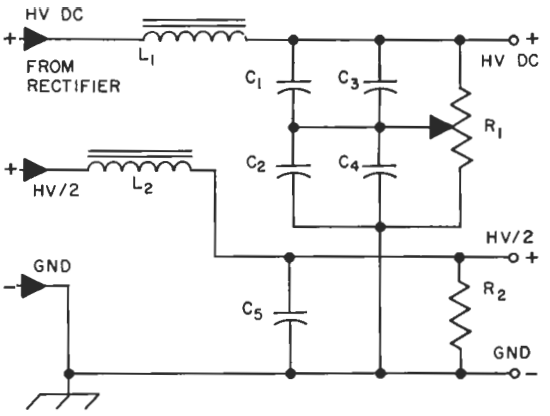

Fig. 2B. Schematic diagram of the dual choke input filter circuit recommended for use with all rectifier circuits described herein.

PARTS LIST

C_1—C_5—125-mfd, 450-volt electrolytic (Sprague TVL-1760).
F_1—Small cartridge fuse and holder (3-ampere fuse for power supplies with up to 200 ma output, 5-ampere fuse for over 200 ma).
D—Semiconductor rectifiers (See TABLE I).
J_1—2-prong male chassis power receptacle.
J_2—Female high-voltage connector.
L_1—8 to 20-henry, 200 to 500-ma smoothing choke, with 1600-volt insulation.
L_2—20-henry, 50-ma smoothing choke.
R_1—50,000-ohm, 50-watt adjustable resistor.
R_2—25,000-ohm, 25-watt resistor.
S_1—Double pole, single throw 3-ampere toggle switch.
S_2—Single pole, single throw 3-ampere toggle switch.
S_3—Single pole, double throw 3-ampere toggle switch.
S_4—2-pole, 3-position 3-ampere selector switch.
T_1, T_7, T_8—Replacement type radio or television receiver power transformer, approximately 700 volts, center-tapped, at 150–350-ma DC output, 5-volt and 6.3-volt heater windings.
T_2, T_9, T_{10}—5-volt, 3-ampere transformer, 115-volt primary.
T_3—6.3-volt, 3-ampere transformer, 115-volt primary.
T_4, T_6—Replacement type television receiver power transformer, up to 750 volts, center-tapped, at up to 400-ma DC output, 5-volt and 6.3-volt heater windings.
T_5—5-volt filament transformer; 3 amperes for one 5U4-GB; 6 amperes for two 5U4-GB's, 115-volt primary.
V_1, V_2—G-E 6AX5-GT full-wave rectifier tubes.
V_3—V_6—G-E 5R4-GYA, 5U4-GB, or 5V4-GA full-wave rectifier tubes (see text).
V_7—G-E 5R4-GYA or 5U4-GB full-wave rectifier tubes (see text).

By substituting the alternate primary circuit for T_1 shown in Fig. 3, any of three primary voltages may be selected. The center position on S_4 applies normal line voltage to T_1; the HIGH position connects the heater windings to add to the line voltage; and the LOW position reverses the heater windings and thus subtracts from the line voltage.

The primary voltage switching circuits and high-voltage filter circuit are recommended for the other rectifier circuits which follow. Of course, pilot lights, relay control circuits, cabinet safety interlock circuits, indicating meters, output voltage regulators and other extra features may be added as desired. Only the basic circuitry has been shown here.

The maximum output current rating given replacement type power transformers by most manufacturers apply for these conditions: One, continuous operation; two, a full-wave rectifier circuit; and three, a capacitor input filter. For intermittent amateur type operation, approximately the same output current (and nearly twice the output power) can be drawn from the same transformer without excessive heating under the following conditions: First, operating into a bridge rectifier which more efficiently utilizes the high-voltage winding; and second, a choke input filter which reduces the peak current and power loss in the high-voltage winding as compared with a capacitor input filter.

It is a fairly simple matter to add the additional components to a good full-wave power supply to convert it to a bridge rectifier circuit and thus considerably increase the total DC output power obtainable from the supply. The only chassis-top space needed is for the two 6AX5-GT rectifier tubes. The extra filament transformer (T_3) and metal can or tubular type electrolytic capacitors (C_1 and C_3) can be located beneath the chassis.

SEMICONDUCTOR BRIDGE RECTIFIERS

Recent developments in the field of semiconductors have resulted in the marketing of highly efficient, moderate cost germanium, silicon and selenium rectifiers. Even though the maximum ratings usually apply to half and full-wave rectifier circuits, several identical semiconductor rectifiers can be connected into a bridge rectifier circuit. In a bridge circuit, the peak inverse voltage across each leg will be only half as much as in a half or full-wave rectifier for a given DC output

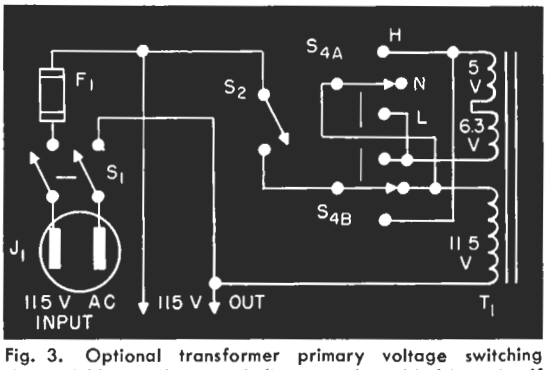

Fig. 3. Optional transformer primary voltage switching circuit. Additional heater windings may be added in series if available. All windings should be in phase.

[1]Grammer, "More Effective Utilization of the Small Power Transformer," QST, November, 1952, page 18.

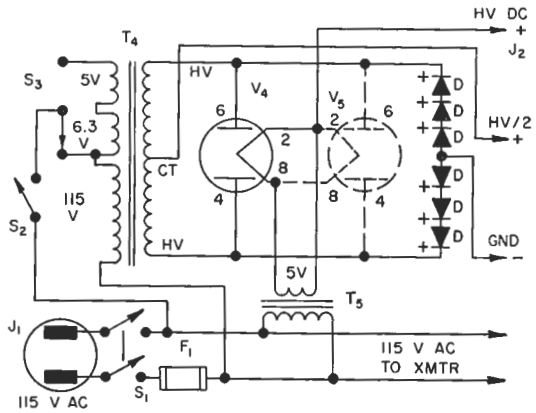

Fig. 4. Schematic diagram of a bridge rectifier converted from a full-wave rectifier by adding three series-connected semiconductor rectifiers in each leg. The optional rectifier tube, V_5, should be included to handle maximum current drains between 275 and 550 milliamperes.

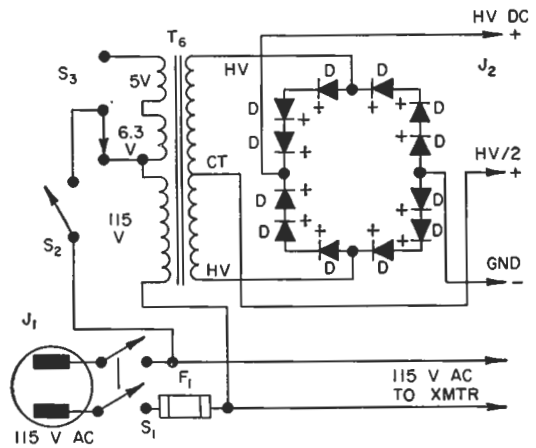

Fig. 5. Schematic diagram of a semiconductor bridge rectifier having three rectifier cells in each leg.

voltage. Thus, each rectifier in a bridge circuit will withstand nearly twice the rated AC voltage without exceeding the peak inverse voltage rating.

Series-connected semiconductor rectifiers can be employed in the place of rectifier tubes in the two added legs in the previously described "Economy" bridge circuit, as shown in Fig. 4. This arrangement is adaptable to a power supply in which the extra filament transformer winding is not readily available.

The DC high voltage is taken from the heater circuit of V_4, and approximately half this voltage will be delivered from the center tap on the high-voltage winding, formerly connected to ground in the full-wave circuit. The lower voltage is rectified by the two strings of semiconductor rectifiers operating in a full-wave circuit. An additional full-wave rectifier tube, V_5, may be connected in parallel with V_4 to reduce the tube voltage drop if the additional heater power is available from T_5.

A bridge circuit in a new dual-voltage power supply can employ semiconductor rectifiers in all four legs. This circuit, shown in Fig. 5, also is suitable when an existing power supply is being rebuilt. Three series-connected rectifier cells are shown in each leg of these circuits. Only two rectifiers per leg may be necessary for certain operating conditions, as shown in the circuits of Fig. 6A and 6B.

Table I shows the maximum recommended operating voltages and currents for several popular semiconductor rectifiers in the aforementioned circuits. The 550-milli-

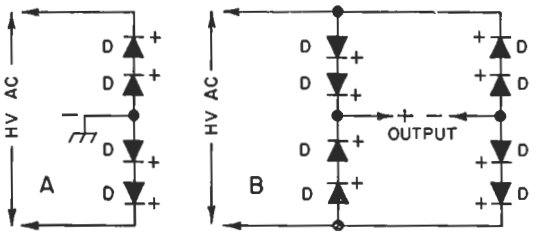

Fig. 6. Schematic diagrams showing (A) four and (B) eight rectifier cells used in half and full semiconductor bridge circuits in Figs. 4 and 5, respectively.

TABLE I—SEMICONDUCTOR RECTIFIER DATA

Rectifier	Ckt. Fig.	Quant. Rect.	Max. AC Input V.	Max. DC Current
1N93	4	6	660 V.	300 MA.
1N93	5	12	660 V.	300 MA.
1N153	4	6	660 V.	550 MA.
1N153	5	12	660 V.	1000 MA.
1N158	6A	4	810 V.	550 MA.
1N158	6B	8	810 V.	1000 MA.
1N539	6A	4	840 V.	550 MA.
1N539	6B	8	840 V.	1500 MA.
1N540	6A	4	1120 V.	550 MA.
1N540	6B	8	1120 V.	1500 MA.
300-MA Selen. Rect.	4	6	990 V.	500 MA.
	5	12	990 V.	500 MA.
	6A	4	660 V.	500 MA.
	6B	8	660 V.	500 MA.

ampere rating shown for the combination tube and semiconductor rectifier circuits is the maximum current that two 5U4-GB tubes in parallel will deliver. Note that the 1N158, 1N539 and 1N540 rectifiers are capable of handling far more current than the average power transformer will deliver.

A bridge rectifier made from replacement type selenium rectifiers costs less than a comparable germanium or silicon bridge, but the full-load voltage drop is about four times higher. Also, the temperature of the air surrounding selenium rectifiers should be kept below 115 degrees Fahrenheit. Germanium and silicon rectifiers are rated for normal operation in temperatures up to 130 degrees. In addition, the silicon rectifiers will operate at much higher temperatures with reduced current output.

TWO-TRANSFORMER DUAL FULL-WAVE RECTIFIER

The high-voltage windings of two similar power transformers may be connected in series, instead of in parallel, and used in a power supply having separate full-wave tube rectifiers for the full and half DC output voltages. As shown in Fig. 7, the midpoint between the windings becomes the negative output voltage connection. The center taps of the two windings are connected to one full-wave rectifier, V_6, and the outer ends feed the other full-wave rectifier, V_7. The windings must be in phase, otherwise there will be practically no DC output voltage from either rectifier.

The diagram shows four heater windings all connected in series to provide a greater adjustment in the primary voltage than is possible with two or three heater windings on a single transformer. All windings should be in phase.

A 5U4-GB, 5V4-GA, or 5Y3-GT full-wave rectifier is suitable for the moderate current usually drawn from the lower output voltage tap. A 5U4-GB may be used for V_7 only when the full secondary voltage of each transformer is below 550 volts. A 5R4-GYA full-wave rectifier at V_7 can be operated with up to 950 volts per transformer.

Even for intermittent amateur service, the total current drain from both DC output voltage taps should not exceed the rated current of each transformer by more than 40 percent. The voltage regulation of this circuit is not as good as with a single power transformer, because the rectified current flows through the high-voltage windings only in one direction and tends to saturate the transformer cores at high current drains.

CONSTRUCTION DETAILS

The test model power supplies shown on the front page, and in the top views, Fig. 8, were constructed on 7 x 12 x 3-inch-deep aluminum chassis (Bud AC-408). When power transformers and chokes weighing more than 10 pounds each are used, a steel chassis is advisable, even though it is harder to cut and drill. The heavy components were placed at opposite ends of the chassis mainly to balance the weight load, with the rectifiers between them. The chassis size and parts placement may be changed to suit the equipment which the supply is to power.

The electrolytic capacitors should not be crowded against components which radiate considerable heat, such as the tubes. Capacitors C_1 and C_3 in the filter circuit diagram, Fig. 2B, were mounted on the insulating fiber mounting plates furnished with the capacitors. Since the metal cans of these capacitors are several hundred volts positive with respect to the chassis, fiber insulating sleeves should be placed over them. Holes 1½ inches in diameter were cut in the chassis for these capacitors to prevent the mounting lugs from shorting to the chassis.

Filament transformers, small filter chokes, bleeder resistors and other small parts are mounted under the chassis wherever convenient. The wiring is run along the chassis corners and between components, then laced into a cable upon completion. External connections are made through suitable plugs and terminal strips. A high-voltage type connector is recommended for the full DC output voltage.

Semiconductor rectifiers should be mounted atop the chassis, rather than under it, to allow adequate circulation of air around them. Rectifiers having insulated mounting feet may be fastened directly to the chassis in one or two rows. Small rectifiers having only leads can be mounted on a terminal board like that shown in Fig. 9. Connecting leads to the rectifiers are run up through rubber-grommeted holes in the chassis.

Another mounting method is recommended for selenium rectifiers in the half and full bridge circuits,

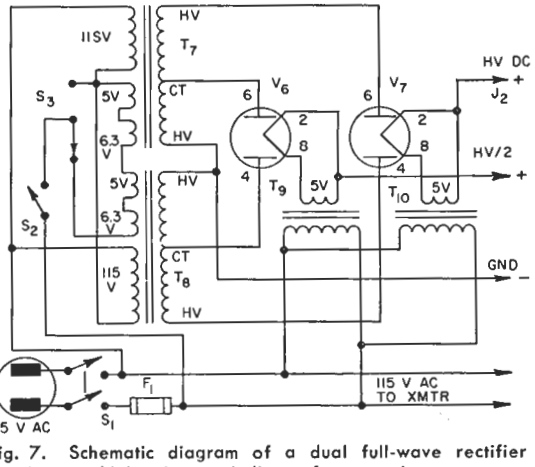

Fig. 7. Schematic diagram of a dual full-wave rectifier circuit using high-voltage windings of two replacement type power transformers in series. Extra "spaghetti" insulating tubing should be slipped over the transformer high-voltage leads to guard against insulation breakdown.

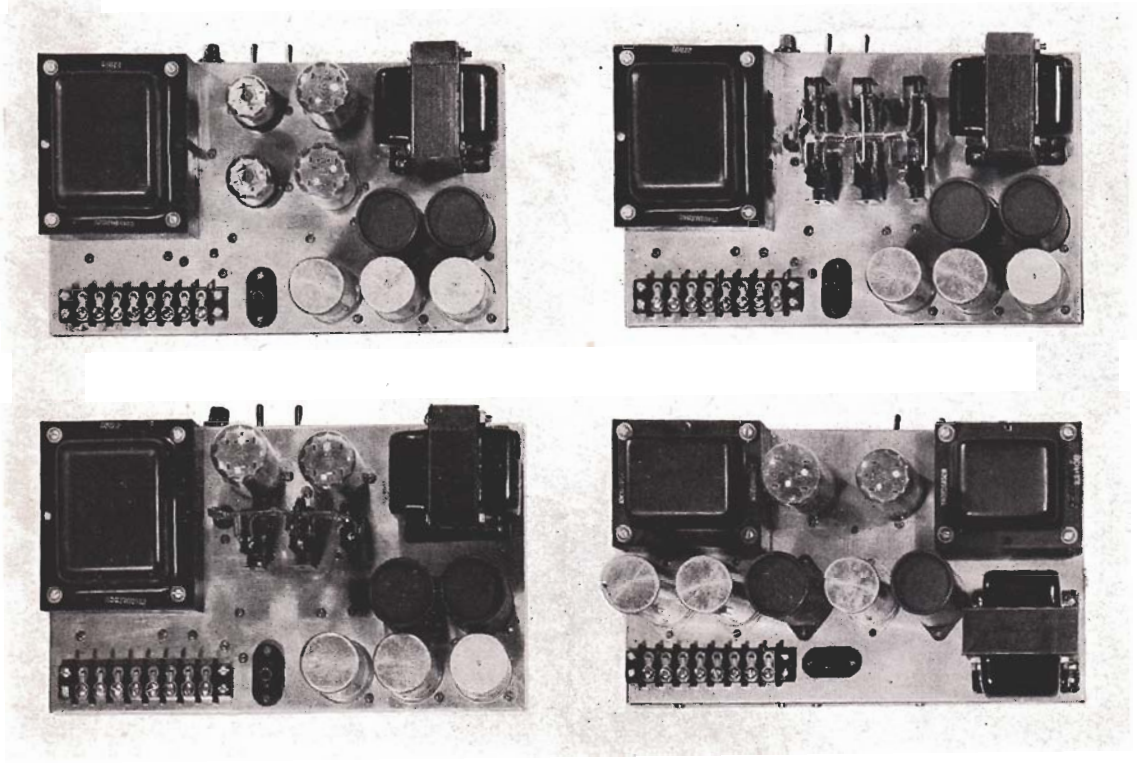

Fig. 8. Top views of the four types of power supplies shown on the cover. Note that the rectifiers are placed well away from the filter capacitors. Chassis size and layout may be varied to suit space requirements.

Figs. 4 and 5. The thin fiber tubes through which the rectifier fastening screws pass may not withstand the voltages involved, so four rows of three rectifiers each were fastened to the 5 x 5 x ¼-inch-thick laminated insulating board (Textolite or bakelite), shown in Fig. 10. The bottom edge of this board was drilled and tapped for fastening screws which run up through the chassis. A perforated metal shield should be placed over both germanium and selenium rectifiers to prevent curious fingers from touching dangerous voltages!

OPERATION

Power supplies do not have to be tuned up or otherwise adjusted, but a wiring check is advisable before applying power for the first time. After turning on the AC power, both DC output voltages without a load, and with full load, should be checked. These may be raised or lowered by adjusting the transformer primary voltage, as previously outlined.

Output voltage tests were conducted on all power supply circuits to obtain the comparative voltage regulation figures shown in Table II. When testing each power supply, the primary voltage was adjusted so that the high-voltage winding always delivered 700 volts AC regardless of the output current load. The figures thus will help determine the output voltage that can be expected from each type of rectifier when operated from a transformer having other than 700 volts AC output.

Other tests were run with the power supplies delivering twice the output current at which the power transformers were rated in full-wave rectifier service. After an hour of this torture, no components overheated to the extent that they smoked or showed other signs of failure.

These tests, plus hundreds of hours of use in transmitters, offer proof that these simple power supplies made from low-cost components will "deliver the goods" in your 60 to 200-watt transmitter.

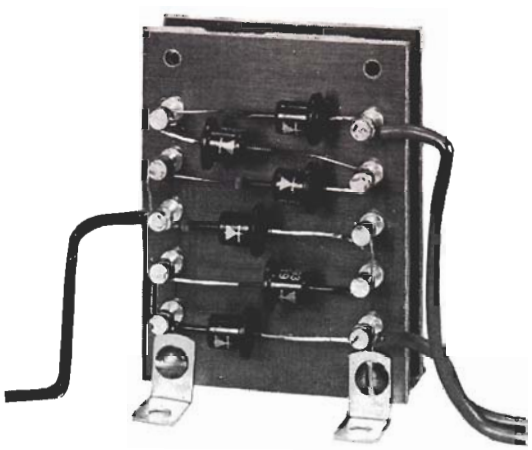

Fig. 9. View showing a suggested mounting arrangement for a group of lead-mounted germanium or silicon rectifiers on terminal boards. The boards were fastened together with bolts and spacers, then mounted on the chassis with small angle brackets.

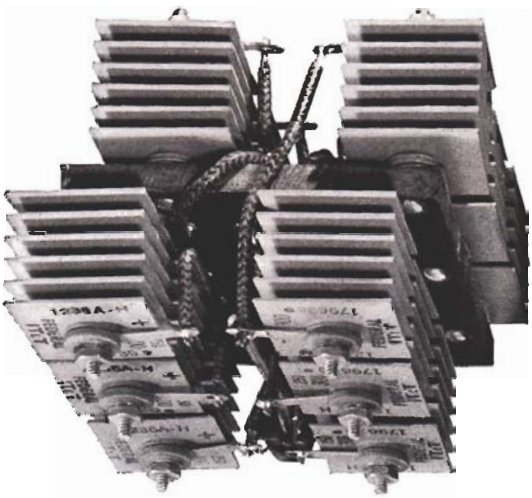

Fig. 10. Detail view of the suggested mounting method for the twelve selenium rectifiers. This assembly fits into the same area occupied by the other types of rectifiers shown in the top views.

TABLE II—POWER SUPPLY OUTPUT VOLTAGE MEASUREMENTS

POWER SUPPLY			OUTPUT—HV DC TERMINAL			OUTPUT-HV DC/2 TERM. WITH 50-MA LOAD AS LOAD IS VARIED ON HV DC TERM.		
CIRCUIT	FIG.	RECTIFIERS	NO LOAD	100-MA LOAD	200-MA LOAD	NO LOAD	100-MA LOAD	200-MA LOAD
TUBE BRIDGE	2A.	1—5U4-GB 2—6AX5-GT	720V.	580V.	550V.	300V.	260V.	240V.
TUBE BRIDGE	2A.	2—5U4-GB 2—6AX5-GT	725V.	590V.	560V.	300V.	260V.	240V.
COMBINATION BRIDGE	4.	1—5U4-GB 4—1N158	720V.	600V.	570V.	310V.	300V.	290V.
COMBINATION BRIDGE	4.	2—5U4-GB 4—1N158	725V.	605V.	575V.	310V.	300V.	290V.
GERMANIUM BRIDGE	6.	8—1N158	740V.	650V.	640V.	310V.	305V.	300V.
SELENIUM BRIDGE	6.	12—300-ma Selenium Rect.	735V.	630V.	610V.	305V.	280V.	265V.
TWO-XFMR FULL WAVE	9.	1—5U4-GB 1—5R4-GYA	725V.	580V.	520V.	290V.	275V.	265V.

HAM NEWS
TUBES
SEPTEMBER-OCTOBER, 1961

AMSAT
APPLIANCE DEPARTMENT
AMERICAN FACTORS LTD.
BOX 1721

TRANSMITTER PROTECTIVE CIRCUITRY

By Norman L. Morgan, W7KCS/9

EVERY TRANSMITTER should have circuits designed into it to protect valuable components — and especially the transmitting tubes — against failure due to accidental overloads. Be safe — not sorry — with these low-cost circuits by W7KCS/9.

Adequate protection of transmitting tubes is like taking out fire insurance for your home — it's pretty inexpensive compared with the cost of power components. Often power tube failures happen during initial testing when the builder is busily checking the transmitter operation and fails to notice damaging currents in expensive tubes.

Ideally the philosophy of protection should be that the tube can survive on only its own protective circuits, as shown in Fig. 1. With this idea as the objective in designing power supplies, only the usual precautions are needed to prevent extensive tube and component damage.

Electrical failures are caused by excessive element heating or element overvoltage. Excessive dissipation is generally a result of (1) loss of excitation, (2) failure of plate or bias supplies, or (3) excessive loading. Overvoltage is mainly a result of low voltage drop in series resistors when power is correctly applied to the tube.

Loss of excitation in unprotected circuits can cause damaging screen and plate currents. Protection is generally supplied by clamp tubes or fixed bias to cut off these currents. Although clamp tube operation is quite popular and is extensively used by many amateur designers, it must be realized that screen grid voltage variation is built in with these circuits. Clamp tubes usually operate with a dropping resistor which results in undesirable screen voltage changes so detrimental to good SSB operation of a linear amplifier.

On the other hand, the high reliability and positive protection of fixed bias to cut off currents allows the screen grid to be operated directly from a stiff power source to achieve the good voltage regulation necessary for class AB (triodes in class B) operation of the power amplifier.

Loss of plate voltage in tetrode or pentode tube essentially transfers plate current to the screen if it is separately powered, which generally results in excessive screen grid current and rapid failure.

Actual failure of the plate power supply is a rare phenomenon, but its effect is the same as when the high voltage power supply switch is accidentally switched off during operation. This is especially true during initial tune-up and neutralizing when the plate power supply may not be energized, although screen voltage may be accidentally applied along with power to exciter stages.

(continued on page 2)

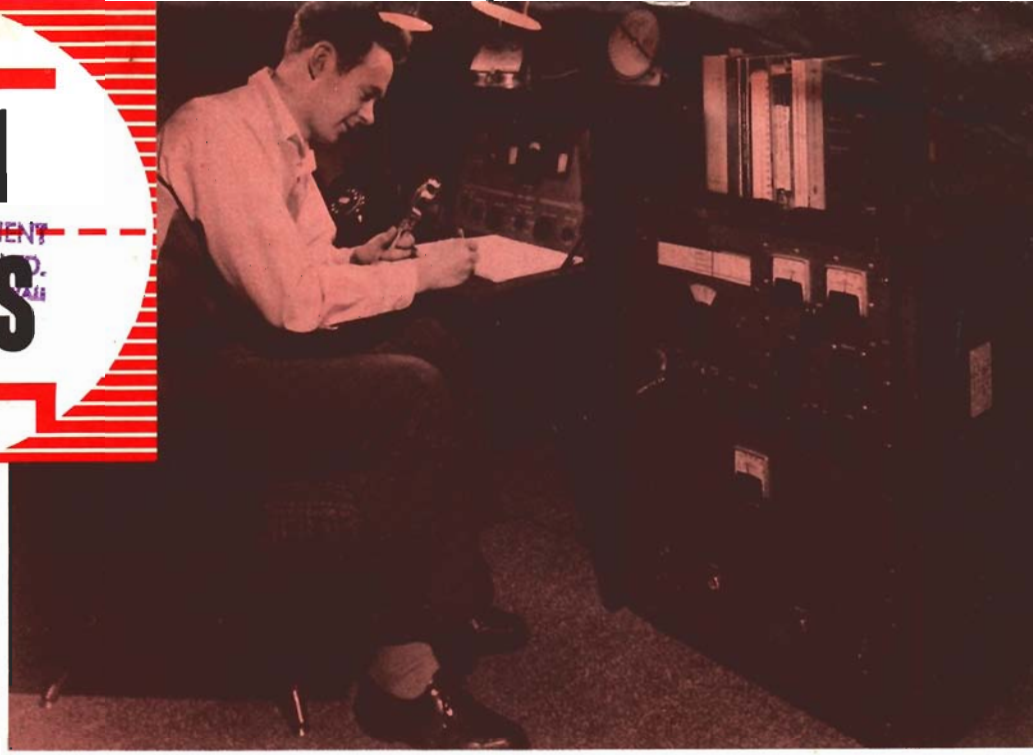

NEAT STATION AT W7KCS/9, including the compact 250-watt CW and AM transmitter in which the protective circuits described in this article are installed. Transmitter covers 3.5 to 29.7 megacycles, and, except for commercial VFO and dial, is completely home made. Norm Morgan operates his transmitter mainly on the 21 and 28-megacycles bands. He is an Application Engineer with General Electric's Specialty Motor Department in Fort Wayne, Indiana. Norm has also authored several articles on electronic control circuits in trade magazines.



REAR VIEW of transmitter at W7KCS/9, with complete power supplies and modulator in lower unit, and RF exciter and power amplifier, and audio preamplifier in upper unit.

IN THIS ISSUE

TRANSMITTER PROTECTIVE CIRCUITRY ..... page 1
INDUCTIVE TUNING FOR HIGH-C RF OSCILLATORS ..... page 4
SCANNING THE SPECTRUM ..... page 8
ANNOUNCING 10TH ANNUAL EDISON RADIO AMATEUR AWARD ..... page 8

Copyright 1961, by General Electric Company

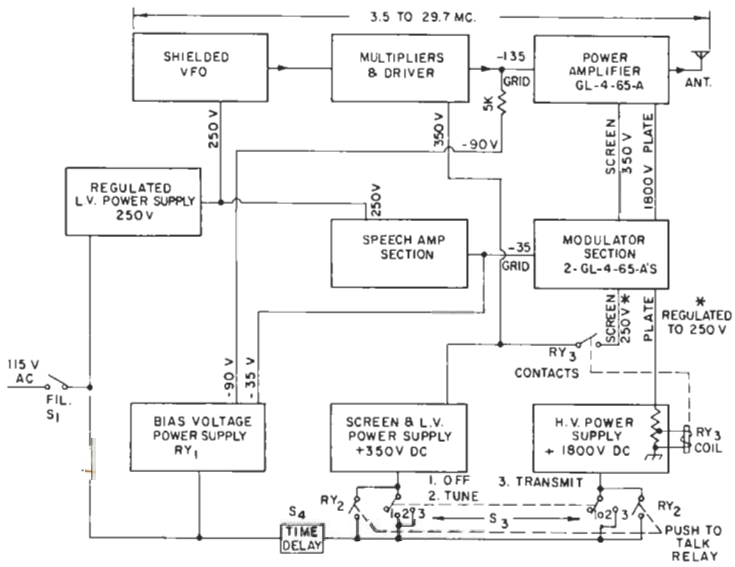

FIG. 1. BLOCK DIAGRAM of W7KCS/9's home-built transmitter, showing where protective circuits have been incorporated to protect the RF power amplifier and modulator tubes. Details are given in the text and subsequent diagrams.

TRANSMITTER PROTECTIVE CIRCUITRY

(continued from page 1)

The two most used methods of preventing screen damage due to these circumstances are (1) screen dropping resistors or screen wattage limiting resistors, and (2) various current relays. The dropping resistor alone can cause screen grid failure through overvoltage resulting from low screen current.

The undesirable effects of poor screen grid voltage regulation through a dropping resistor can be partially offset by connecting a voltage regulator VR tube as shown in Figure 2. The wattage limiting resistor is chosen so that the screen grids cannot draw more than rated dissipation no matter what current they demand. The voltage regulating tubes maintain the 255 volt screen voltage for all normal values of screen current.

Should the screen grid begin excessive current the limiting resistor drops the voltage, extinguishing the VR tubes and limiting the total dissipation of the screen grid to a safe level. Note that the screen grid should be operated somewhat less than maximum allowable wattage in order to leave some reserve for this action.

SCREEN GRID OVER-CURRENT RELAYS

or plate voltage sensing screen relays allow the screen voltage to be supplied by a *stiff* power source. The screen grid current sensitive relay is probably the most positive method of preventing failure. It will disconnect screen voltage when the screen grid current is excessive.

However, a less expensive method, the plate voltage sensing relay, protects the screen grid when plate voltage is not present and can be connected from the high voltage bleeder resistor to ground, as shown in Figure 2. The plate voltage will thus approach its full value before the screen power supply is connected to the tube screen grid. Unless there is plate voltage present, no screen voltage can be applied to the power amplifier or modulator tubes.

Failure of the negative control grid bias supply when it is used, is fortunately a rare occurrence. However, protection against this failure can be accomplished by installing relays in the plate and screen circuits which turn on these voltages only when bias voltage is present.

A push-to-talk switch can be connected in series with a voltage sensing relay which energizes the AC side of both the high voltage power supply and the screen power supplies. Notice in the schematic diagram of Fig. 2 that the voltage sensing relay is operated directly from the power amplifier grid bias source. Thus, plate and screen power cannot be applied unless grid bias is present. This relay in turn actuates the power relay which actually closes the primary AC circuits.

Since the coil current of the power relay is generally rather high it is advisable to use a small, low current relay in the push-to-talk circuit to actuate the power relay. Also, the power relay should be rated considerably higher than the normal primary current, since this current is largely inductive and may cause arcing and pitting of contacts on lower rated relays. Ideally, AC motor starting relays should be used to minimize these difficulties.

Damage to expensive power amplifier tubes can result from excessive plate loading, and can be pre-

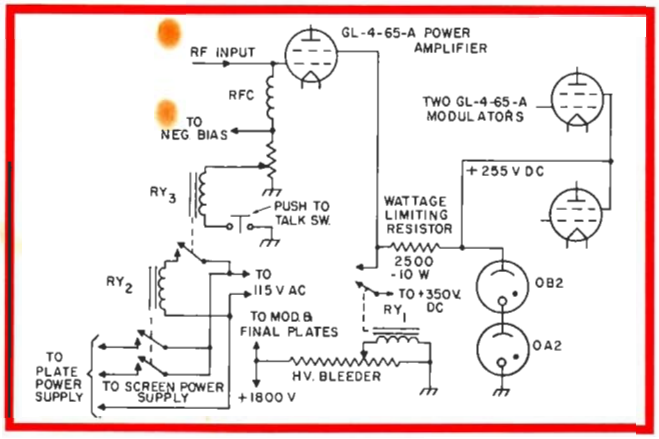

FIG. 2. SIMPLIFIED SCHEMATIC DIAGRAM of the basic protective circuits in the W7KCS/9 transmitter. High voltage plate supply cannot be turned on by RY_2 unless RY_3 is energized by the negative bias supply. Screen voltage is off until sufficient plate voltage energizes RY_1.

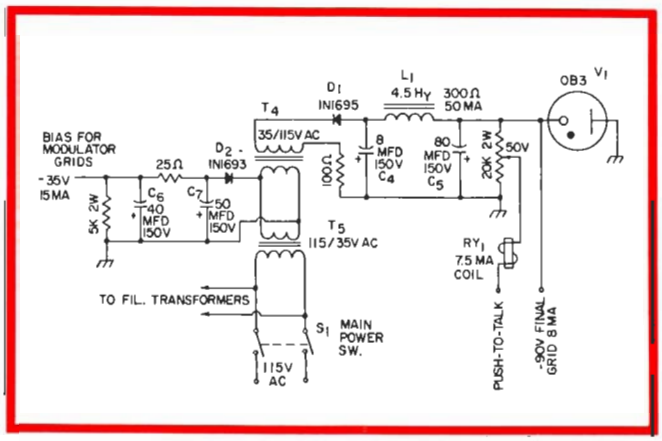

FIG. 3. SCHEMATIC DIAGRAM of the dual bias voltage supplies. Transformer T_5 and rectifier D_2 supply 35 volts negative bias for modulator control grids. T_5 also supplies primary voltage for T_4, a 90-volt regulated bias supply for RF power amplifier.

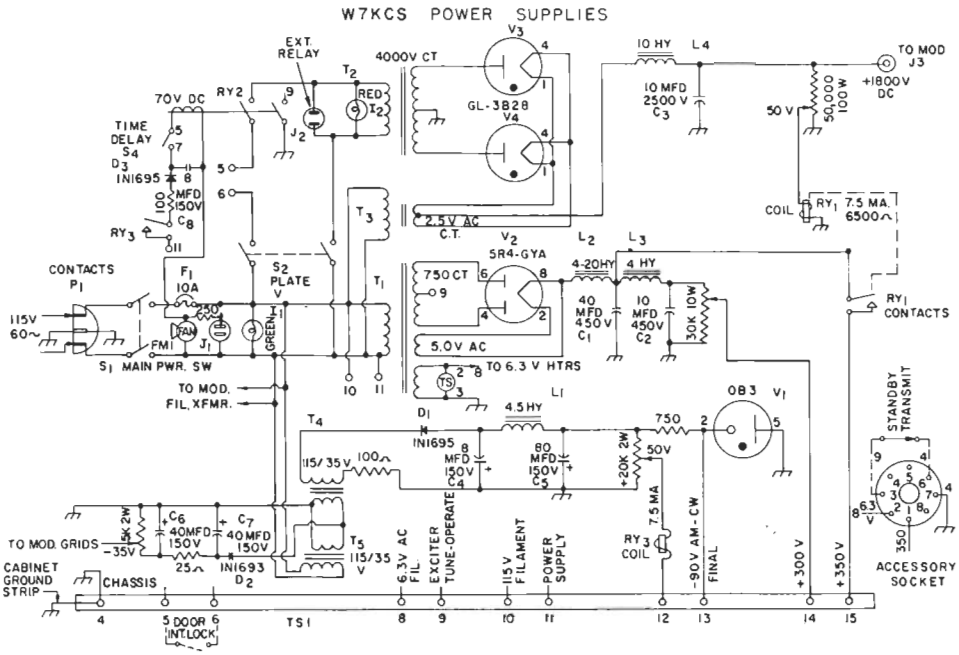

FIG. 4. COMPLETE SCHEMATIC DIAGRAM of protective circuits in the power supplies of the W7KCS/9 transmitter. Diagram includes the basic protective circuits shown in Fig. 3. Descriptions of components are given in TABLE I — PARTS LIST. Capacitances are in microfarads (MFD); resistances are in ohms, with wattage ratings given for resistors over ½ watt. Reloys RY_1, RY_2 and RY_3 can have 5,000-ohm, 6-ma. coils; RY_1 and RY_3 have SPST contacts, RY_2 has DPST contacts.

TABLE I — PARTS LIST

C_1.....40-mfd., 450-volt working tubular electrolytic (G.E. QT1-14).
C_2.....10-mfd., 450-volt working tubular electrolytic (G. E. QT1-6).
C_3.....10-mfd., 2500-volt working Pyranol metal cased capacitor.
C_4, C_5—8-mfd, 150-volt working electrolytic (G. E. QT1-5).
C_5.....80-mfd., 150-volt working tubular electrolytic (G. E. QT1-20).
C_6, C_7....40-mfd., 150-volt working electrolytic (G. E. QT1-13).
D_1, D_3—400-peak volt, 100-ma. silicon rectifier (G. E. 1N1695).
D_2.....200-peak volt, 100-ma. silicon rectifier (G. E. 1N1693).
F_1.....10-ampere fuse and 3AG type fuse holder.
FM_1...115-volt; 60-cycle, shaded-pole motor (G. E. KSB-33).
I_1.....pilot lamp with 115-volt Canadelabra socket, green jewel.
I_2.....same as I_1 with red jewel.
J_1, J_2....2-pin female chassis type power receptacle.
J_3.....high-voltage insulated connector.
L_1..... 4.5-henry, 50-ma. filter choke.
L_2.....4 — 20-henry, 150-ma. swinging type choke.
L_3..... 4-henry, 150-ma. filter choke.
L_4.....10-henry, 300-ma. high-voltage insulated filter choke.
P_1.....3-pin grounding type male power plug.
S_1 S_2....DPST 10-ampere power toggle switch.
S_3.....3-position, 2-pole single section tap switch.
S_4.....115-v thermal switch; 60-second delay (Amperite 115NO60).
T_1.....power transformer, 750 volts, center tapped at 150 ma., 5-volt, 2-ampere, and 6.3-volt 6-ampere heated windings; 115-volt primary.
T_2.....high voltage transformer, 4000 volts, center tapped, at 300 ma., 115-volt primary.
T_3.....filament transformer, 2.5-volt, 10-ampere secondary, 10,000-volt insulation; 115-volt primary.
T_4, T_5....35-volt, 100-ma. secondary, 115-volt primary.
TS_1....terminal strip, 15 terminals.
V_1.....G. E. type 0B3 90-volt, octal-base voltage regulator tube.
V_2.....G. E. type 5R4-GYA full wave high-vacuum rectifier.
V_3, V_4....GL-3B28, Xenon-filled high voltage rectifiers.

vented by plate over-current relays, other element relays, or by careful tune-up procedure. Normally, during initial tune-up a wary eye is kept on the plate currents so that excessive loading of these circuits is generally only a result of careless procedure. At first glance these schematic diagrams (Figs. 2 and 3) appear to contain several electro-mechanical elements; however, it is surprising how inexpensively voltage-sensitive relays can be obtained. The two voltage-sensitive relays used in the W7KCS transmitter were less than $1.00 each.

Low-cost silicon diodes have greatly simplified the construction of grid bias supplies because they provide extremely low resistance in the forward direction. This is important in bias supplies since the over-all equivalent resistance of the supply adds to the grid leak resistance to determine the total grid bias under excitation.

In the W7KCS transmitter it is necessary to provide two values of bias voltage; namely, minus 135 volts power amplifier, and minus 35 volts for the modulator. Ninety of the 135 volts are obtained across the OB3 90-volt regulator tube in the circuit of the dual bias supply, Fig. 3.

The AC side of the circuit is two 110/35 volt transformers connected primary to secondary and secondary to primary. With the low current drain on the bias supply it is possible to maintain a DC voltage nearly the same as the input AC RMS voltage — or, the output voltage can be greater than the AC input voltage by using input filter capacitance. In addition, the high capacitance improves the normally poor regulation of half-wave rectifier supplies. Current limiting resistors are used (the 100 ohm resistor in the 90 volt supply) in order to reduce the transient currents during the first on-cycle of the rectifier. These small rectifiers cannot handle an extremely high current for an extended length of time; consequently, the impedance looking toward the source must sometimes be artificially made higher. In the low voltage (35 volts) supply the in-rush current was well within the approximately 20 ampere one cycle limit on these rectifiers.

(continued on page 7)

capacitors from RF energy can be minimized by using the lowest possible voltages on the oscillator but despite this precaution some heating and drift are inevitable. Various types and makes of mica and silver mica capacitors were tried and despite popular belief, some silver mica capacitors were no better than conventional micas in this application. A slight improvement was noted by paralleling several capacitors to provide the required 0.006 mfd. of capacitance. This VFO parallels three .002-mfd. capacitors for each of the voltage dividing capacitors.

The drift problem was licked in conventional fashion by the use of temperature - compensating capacitors in the oscillator grid-coupling and tuned circuit. These reduce the drift to less than 30 cycles at the fundamental frequency.

If you don't want to bother with temperature compensation you can still rate your VFO as manufacturers do by saying, "drift is negligible after ten minutes warmup." However, the true test for short-term VFO stability is the amount of drift measured from the moment plate power is applied, after two minutes of heater warmup. After all, the fellow at the other end doesn't wait ten minutes for your VFO to warm up before he starts to copy you!

Aside from the afore-mentioned drift considerations, the Inductuner VFO eliminates "pussyfooting" on the operating table. Even on 28 megacycles the VFO can be rapped sharply with no detectible change in beat-note — provided the oscillator components have anchored down. The Inductuner completely eliminates frequency variations usually found in the average home-built VFO where a push on the front panel shifts frequency.

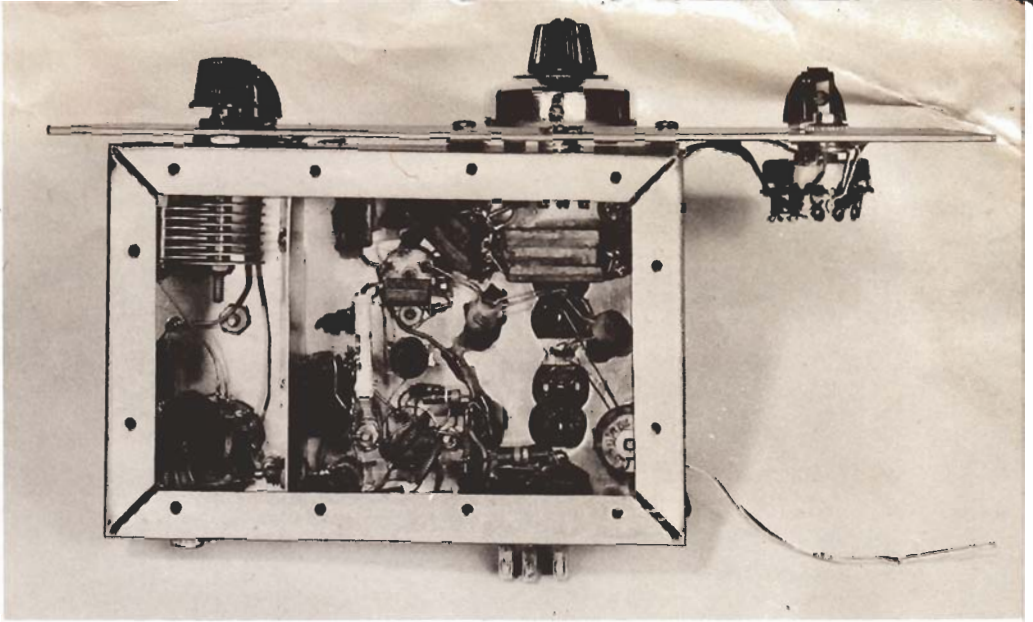

BOTTOM VIEW of the exciter, showing placement of smaller parts around the major components, locations of which are shown in Fig. 4 below. Note the two groups of three 0.002-mfd. mica capacitors in parallel for C_3 and C_4. The toroidal coil, L_2, shown at the lower right corner, fastened to the chassis with insulating spacer washers and a brass machine screw. Bottom plate covers chassis for shielding.

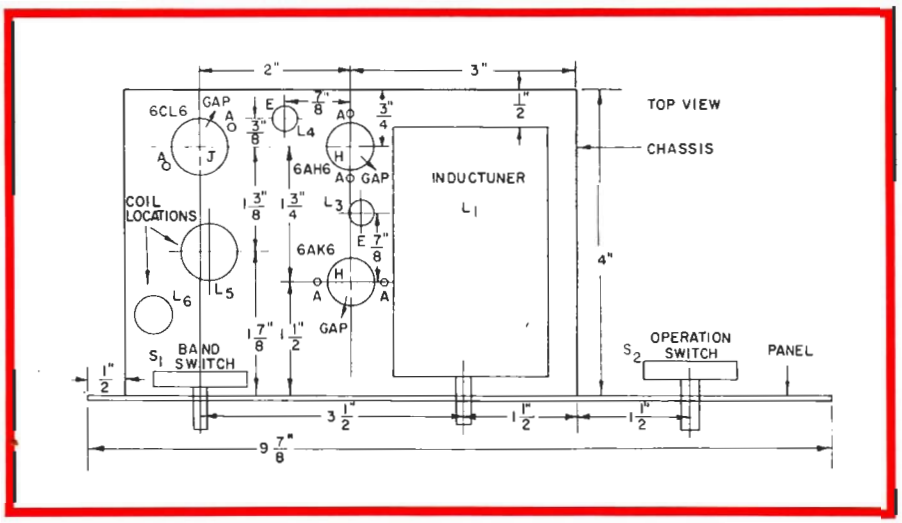

FIG. 4. CHASSIS LAYOUT DIAGRAM for the inductive-tuned VFO exciter. Locations for coils L_5 and L_6 are also shown. Holes marked "A" are No. 31 drill for No. 4 machine screws; those marked "E" are $\frac{9}{32}$ of an inch in diameter for the mounting studs on L_3 and L_4.

TRANSMITTER PROTECTIVE CIRCUITRY

(continued from page 3)

THE COMPLETE POWER SUPPLY for the transmitter at W7KCS is shown in the schematic diagram of Fig. 4. Note that all of the foregoing features have been included in this circuit. Power is fed into the power supply through a 3-prong AC line plug whch provides for automatic grounding of the transmitter cabinet and chassis. A time-delay switch is included in the high voltage supply primary circuit to provide 60 seconds delay after the GL-3B28 filaments are energized, before the high voltage transformer can be energized.

Good construction practice should be followed in this unit, including adequate insulation in high voltage circuits, fastening small parts securely to prevent movement, etc. The photographs of W7KCS's transmitter and power supplies on these pages show many of these construction details. Readers are also referred to the "Power Supply Construction" chapter of the ARRL *Radio Amateur's Handbook* for further suggestions.

Although W7KCS's protective circuits have been utilized in his AM transmitter, they are also excellent for the bias, screen grid and plate voltage power supplies for linear amplifiers. They can be easily added as subassemblies to existing power supplies.

It's smart to protect the lives of your transmitting tubes — not to mention your own life — by including these simple, but effective circuits in your transmitter.

CONTROL CIRCUIT VOLTAGE is measured by Norm Morgan checking the protective circuits in his transmitter. Note that all parts are firmly fastened to chassis.

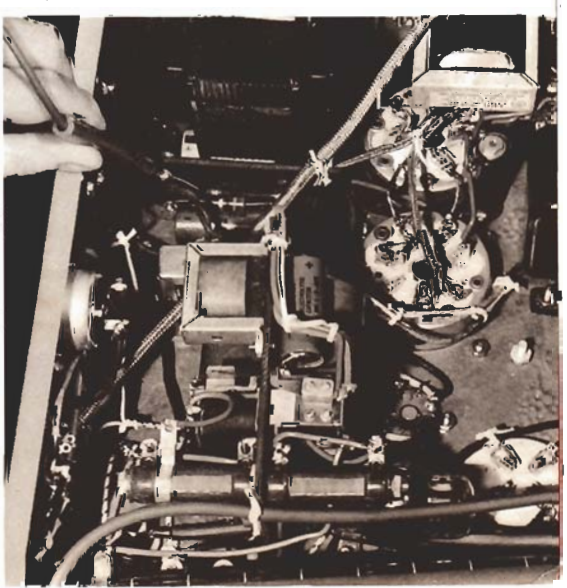

Phone Patches

A phone patch is an audio accessory for a station that allows an extension of the microphone and the receiver's speaker via a telephone line. This is not done as much as in the past. Its primary purpose is to allow a third party to call the ham station via the telephone, and, as a guest, be switched into the communication circuit being run by the radio operator. At the other end, the evere would happen. The other third party, perhaps a relative, would then be able to talk to the other party. By appointment and a pre-arranged schedule, volunteer ham radio operators would control the RF long distance portion. Each radio station would use a local phone line to connect to the third parties and allow them to communicate.

The phone patch method is still used for MARS, although much of that is in an e-mail like digital format instead of voice. More information can be found on the www.

In today's world, cellular and sattellite technology has made this unneccessary for most people separated from friends and family, but the knowledge remains here for those interested in interfacing a station's audio properly to the telephone company's circuitry. Another use would be to enable the convenient use of telephone handsets and relared technology at home. There have been many detailed books written on use, theory, and application of the phone patch, available used for low cost.

The most important thing to keep in mind when connecting home made devices to the telephone system is to prevent overloading or overdriving the telco's equipment and drawing unwanted attention to oneself. A good knowledge of the characteristics of the POTS telephone system is important.



the Hum-Free phone patch

Eugene H. Hastings, W1VRK

How many times have you been asked: "Have you got a phone patch there, Old Man? I have a relative who lives near your QTH and I. . . . . ." when the reply has been: "Sorry, I have been meaning to make one up but have not been able to get one of those hum-free transformers" (at less than $20!) or perhaps: "it's not working very well—keep getting r-f feedback . . ." or even: "I have been trying to make one, but I can't find those 'surplus' parts that are supposed to be so plentiful!"

Several of the hams on Boston's North Shore area got rather tired of having to make excuses for not having a phone patch available when 10 meters opened once in a while, or when working 15 or 20, and decided to do something about it. The enclosed schematic and photographs show the finished product.

The wonderful thing about this "patch" is its versatility. Because of its very nature it can be run backwards and forwards, so to speak. Not only can you pick up signals from the phone line, but you can feed them back in—without throwing any switches—anywhere.

Dialing can be accomplished with or without the *patch* connected. Separate potentiometers control the volume of the input and output. For instance, with the *SX-71* receiver at normal listening volume, with the speaker connected, the left-hand knob of the *patch* need only be set at approximately a scale point of 2 or 3, using a range of from 1 to 10. This provides ample volume in the phone for the person listening at the other end when that important DX station

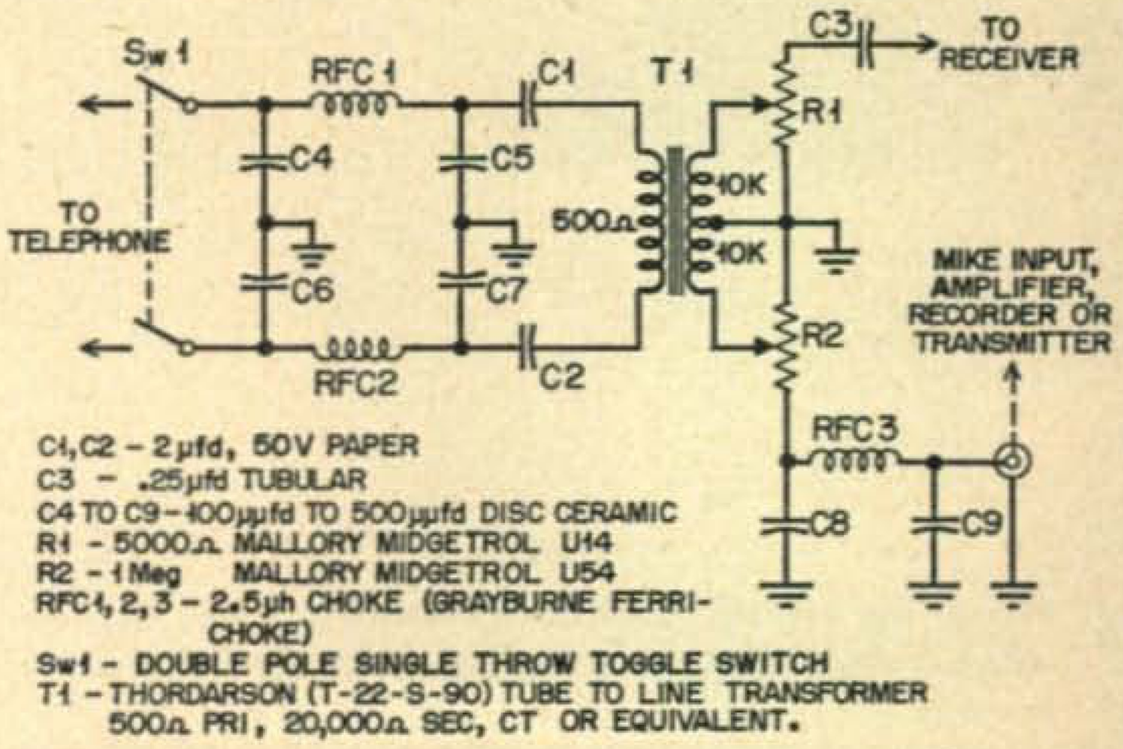

Wiring diagram and parts list of the phone patch circuit designed by W1VRK.

is saying hello to a friend. Now, to enable you *or* the listener to speak to the Ham you merely flip the swith on your transmitter and you're on the air! Of course, this is assuming that when your transmitter is "on," the receiver is in some way disabled, such as in "standby" position.

The author has used his patch on 10-meter phone when a whisper would kick the modulation to a good 60%—and there has been absolutely no sign of r-f feedback. The hamshack is on the third floor and there's plenty of telephone line to pick up any available r.f. You will note that three r-f chokes are used, each by-passed. These need be only of a low-power factor, as negligible current is employed. Illustrated are the relatively inexpensive *Grayburne* ferri-chokes, although heavier-duty *National* or *Millen* chokes can be used.

The transformer is a *Thordarson* tube-to-line transformer. It is a shielded unit. This particular unit has an amateur net price of approximately $3.60—far less than the hi-fidelity shielded units often called for in phone patches. The audio quality of this unit has been praised by everyone that has heard it. None of that "tinny" quality so often associated with *patches*, has been observed.

The unit itself can be mounted on a breadboard (as some have done) but in the photograph the unit has been built in a 3″ x 4″ x 5″ channel-lock aluminum box. The output connection to the speech amplifier is made from the mike connector visible on the back cover of the patch. Shielded wire is used from the connector to the mike input of the transmitter, just as with any crystal microphone. The impedance is such that the phone patch can be used into any high-impedance microphone input without modification. The right-hand knob controls the amount of volume to the transmitter. The values stated are *not* critical.

Operating Hints

An operating hint or two is in order at this point. If your transmitter has a means for monitoring the amount of modulation (such as a meter in the class B modulator plate circuit), excellent balance can be obtained on the signal being broadcast by your station if you watch this indicator and keep your voice down (or away from the phone) while keeping the gain such that the person on the other end of the telephone line will modulate the transmitter close to 100%.

Always try to speak slowly—remember you are no longer using a crystal mike and the person on the other end of the telephone should be able to understand you too, not to mention the minimizing of phrases such as "QRX OM. ." as these tend only to confuse the uninitiated listener and often brings forth a question from said listener just as you are about to cease transmitting or check the channel for QRM.

Now, how about the phone company? How do they feel about this? In general, the telephone company has this attitude: if good engineering practice is employed, if the normal operation of the telephone is not impaired, then there is no harm done.* However, it must be pointed out that over 3 milliwatts of signal put into the phone lines will cause cross-talk in other phone circuits, and this must be avoided. A good measure is the comfortable but loud signal in your own ear via the telephone (of say, your receiver), for it will appear much louder to you than it will to the person at the other end of the telephone conversation. Your own voice is quite loud, but you just don't notice it.

A couple of checks will surprise you. Most often the complaint will be: "It's coming in fine, but your voice is a lot louder . . ." rather than an overloading report. No permanent connection need be made to the phone line, clips will do. In the New England area, the red and green wires are the ones to tap—the yellow rings the phone—but if you made a mistake no harm done, all the phone patch leads are through condensers.

Shielded wire is not required. After all, the phone comes to you through a pretty long length of cable—unshielded. The author used a 4-prong connector for the receiver output and telephone input (and ground) connections, but the cables can come out through grommets if so desired. The tap to the receiver is through a 0.25 μfd. condenser, either to the plate of the final audio tube or to the 500-ohm speaker output. Small ceramic by-pass capacitors were used and the pots are small *Mallory Midgetrols*.

Best of luck with your new piece of shack equipment! It should bring you and others much enjoyment.

---

* Hindin, "The Phone Patch and the Law," *CQ*, Sept., 1954, page 13.

Editor's Note: Throughout the past year we have received a wide variety of manuscripts developing various "phone patch" ideas. The device described above has been especially selected as the one with the most universal appeal and foolproof design.



The Author

W1VRK graduated in the Ham ranks through the provisions of the Novice license. His favorite band is 10, closely followed by 75 and 15 meters—prefers rag-chewing to DX. Experiments with audio and speech equipment. Mobile on 10 and serves as EC for the town of Swampscott. Presently vice-president of the Yankee Radio Club (Salem) and secretary of the North Shore Radio Association for Civil Defense. Member of the advertising staff of the "Lynn Daily Evening Item." Home address: 28 Forest Ave., Swampscott, Mass.

A Simple And Efficient Phone Patch

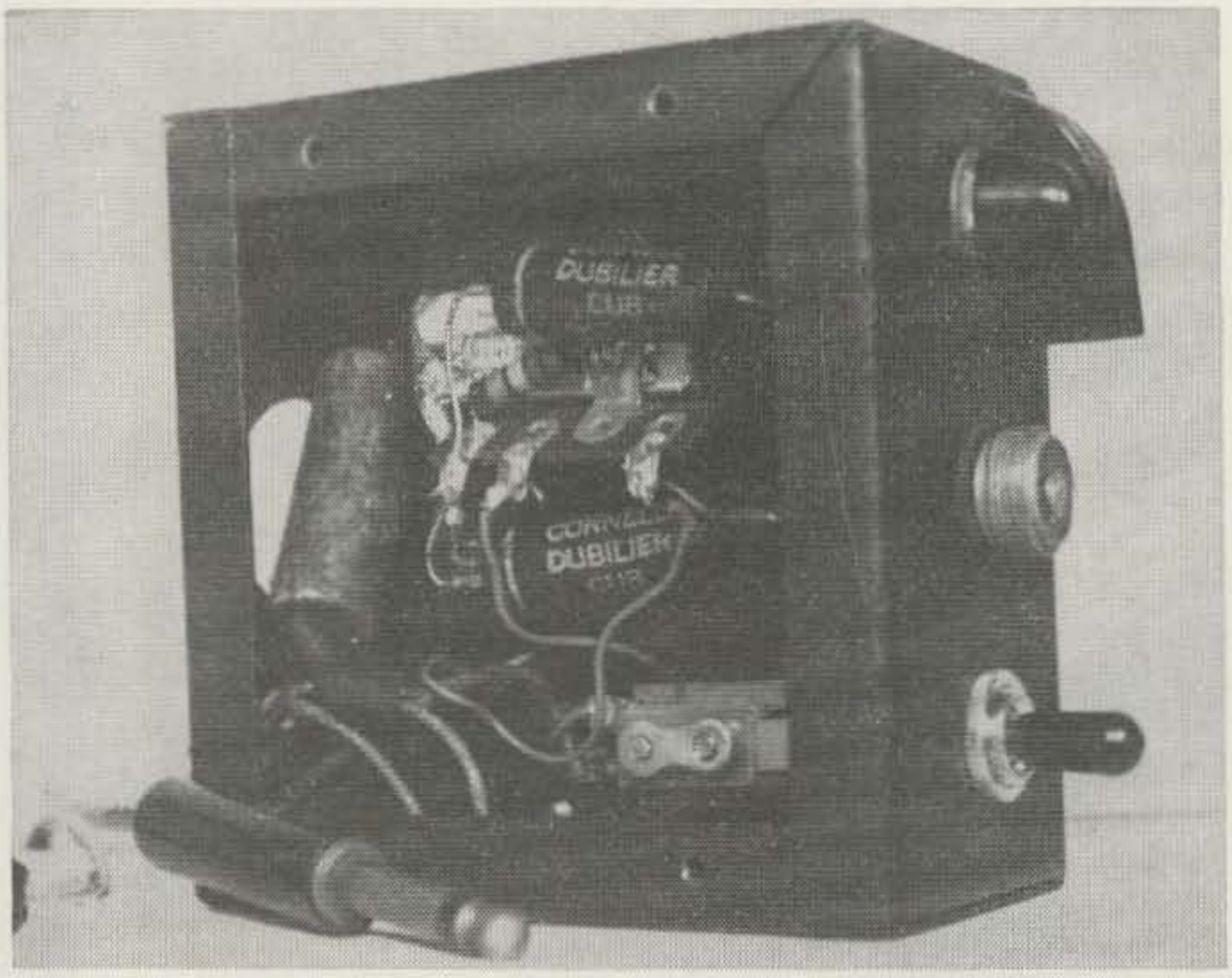

Herbert S. Brier, W9EGQ
385 Johnson Street
Gary 3, Indiana

SIMPLICITY, economy and efficiency are the features of the phone patch described here. T1, a single plate to push pull grid audio transformer with a 1:2 turns ratio (Stancor A-520) is used as a 1:1 coupling transformer between the telephone line and the receiver and transmitter by using only half of its secondary winding. Capacitors C1 and C2 isolate the dc in the telephone line from T1. Capacitors C3 and C4 and resistors R1 and R2 act as a filter to keep the hum and other low frequency noises frequently heard on phone patches from modulating your transmitter.

When SW1, a dpdt neutral-center (switchcraft 30374) lever switch, is in the center position, the patch is completely disabled. When it is in the "Receive" position, the signal from the receiver is piped into the telephone line via PL1, which is plugged into the receiver phone jack. Alternatively, it may be connected to the 500-ohm output terminals of the receiver. Signal level is controlled by the radio receiver volume control and should be no louder than your own voice in the telephone receiver. When SW1 is in the "Transmit" position, the signal from the telephone line is fed into the microphone input jack of the transmitter. Its level is controlled with R2.

The patch is built in a 4" X 4" X 2" metal box (Bud CU-883). Parts arrangement is not critical. My microphone is the type with a connector right on it; therefore, to use the patch, I unscrew the transmitter microphone input cable from the microphone and screw it on PL1. Use shielded microphone cable between the patch and the receiver and the transmitter.

As there are miles of unshielded telephone line connected to the patch when it is in operation, it is not necessary to use shielded wire between it and the telephone line.

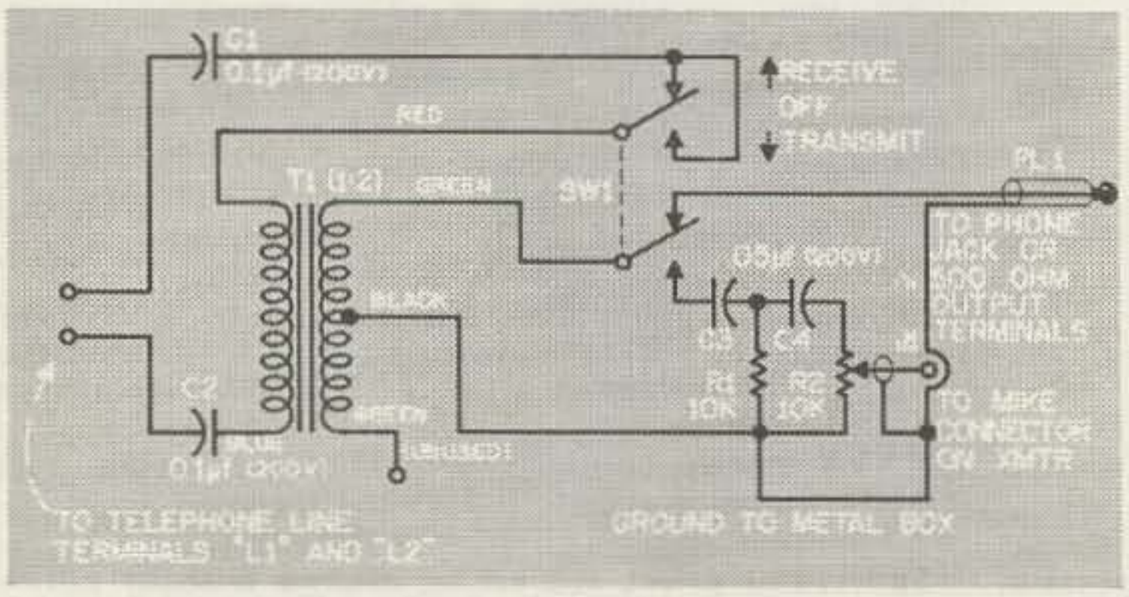

Results

While I take a dim view of the practice of running phone patches just to be running phone patches, this patch has been used to keep a regular phone-patch schedule with Antarctica on sideband for a year. Also, it has been used to run phone patches with many of the other foreign countries with which such traffic is permissible both on AM and SB. It works as well as any other patch I have heard or used and better than many of them.

Although it does not permit "voice break-in" on sideband, this is usually an advantage, because it prevents both parties from talking at the same time, as often happens when inexperienced people are patched into each other via hybrid patches. 73

Servos and Auto-Tune

This section contains information on old style servo and automatic tuning systems. While not strictly part of AM operations, some of the information here goes back to a time when as much automatic tuning was done electrically as electronically.

In one example, a motor rotates a tuning element until the plate current in a 1KW amplifier dips to the correct level, at which it can no longer hold in a relay armature and the power to the motor is removed causing it to stop the tuning element at the proper place.

Servos can be tricky and modern ones seem very complex. Here are a few articles about some of the simple and ingenious principles upon which the early servo system designs operate. Physics never changes. They are entirely practical today.

W6USA . . .



Operating position at W6USA, amateur station of the San Francisco World's Fair. In the background is the 1 kw. 10-80 meter auto-resonator transmitter, which is used on both phone and c.w. The transmitter automatically tunes itself to any of 60 crystal-controlled frequencies selected by the dial on the control unit in the center foreground.

A One-Kilowatt

AUTO-RESONATOR TRANSMITTER

By BILL EITEL, W6UF, and JACK McCULLOUGH, W6CHE

The main exhibition transmitter for the use of amateurs visiting the San Francisco World's Fair on Treasure Island is just about the ideal rig. It is a one-kilowatt transmitter providing selection of any of 60 frequencies between eighty and ten meters by means of an illuminated dial at the operating position, and instant changeover at full power from phone to c.w. by a switch on the control box.

It is hard to imagine an amateur who at some time has not indulged in extravagant dreams of his ideal transmitter. Usually it is a transmitter that is capable of operating on all of the amateur bands and is continuously variable as to frequency within those bands, a transmitter that is capable of the maximum power allowed by law and operates on both phone and c.w. Break-in is a highly desirable feature of any ideal transmitter; so oscillator keying should be employed. However, this feature should be incorporated in such a way so as not to affect the speed or quality of keying.

For the majority of us, such a transmitter has remained only a dream, but recently an unusual opportunity made possible the realization of such a transmitter. The "gang" at Eimac were asked to design a super-de luxe transmitter for use at W6USA, the amateur station on Treasure Island. Through the generosity of Wunderlich Radio, who constructed the transmitter to the design specifications of Eitel-McCullough, and the following manufacturers who donated parts, the transmitter was made a reality: Thordarson Electric Mfg. Co., Bliley Electric Co., Hammarlund Mfg. Co., The Turner Co., Heintz & Kaufman, Ltd., and Barker & Williamson.

The Auto-Resonator

After surveying the usual practices in multi-frequency transmitter design it became apparent that a new approach to the problem would be desirable. It was felt that no sacrifice in the efficiency of either the exciter or the final amplifier should be tolerated for the sake of convenience; the law limits the *input* power to an amateur transmitter, not the output.

The way of attaining peak efficiency at all times is comparatively simple. Each stage is automatically tuned to resonance following each frequency change. The combination of a b.c.l. tuning motor and a simple relay for each resonant circuit does the job. The differential in plate current following a frequency change actuates the relay, which in turn starts the motor. As the tuning condenser passes through resonance, the plate current falls to a minimum value; the relay releases and the motor stops. The motor is equipped with a dog clutch which releases the armature so that inertia in the smaller condensers is not of any serious consequence. Thus the simple b.c.l. tuning motor became the foundation for the auto-resonator transmitter.

Obviously the keynote in the design must be simplicity and high efficiency in order to

minimize the number of tuned circuits, as a large number would complicate the auto-resonator. This particular transmitter at W6USA was to be used on 10, 20, 40 and 80 meters. To take full advantage of the maximum input allowed by law, our carrier power should be approximately 800 watts. The final choice was a pair of 250TH tubes operating at 2500 volts and 400 ma.

Tank Circuit Switching

Normally the switching of high-power tank circuits introduces certain losses that detract from the overall efficiency. Another point is that tank circuits in a multi-band transmitter usually are a compromise, because the tuning condenser used for the lowest frequency is too big for the highest frequency or vice versa. This problem was easily answered by using a vacuum tank condenser for each tank coil. The condenser was chosen for optimum circuit efficiency on each band (0.6 $\mu\mu$fd. per meter). No losses are introduced by the switching arrangement because each tank circuit is made up as an individual unit and only the low current plate leads to the tubes are switched when changing frequency.

The 250TH's were cross-neutralized directly from the plates to the grids of the tubes, so that switching from band to band does not upset their neutralization.

Unlike most multi-frequency transmitters, the final amplifier in this one is connected in push-pull, because of the many advantages to this type of operation. The bandchange switch for the push-pull final stage was especially made for the job, as usually high-voltage insulation was required. The switch is actuated by a b.c.l. tuning motor and an index on the switch shaft. A similar switch using commercially available parts is used to switch the antenna to the various final tank circuits.

The Multi-Driver Exciter

The exciter unit uses a separate 35T tube for each band. On 80 meters the first 35T is used as a straight amplifier while on the other bands the other 35T's are operated as doublers. For example, on 80 meters the 35T runs straight through to the final. On 40 meters the 80-meter amplifier drives a 40-meter doubler which in turn drives the final. On 20 another doubler is cut in, while on 10 all four 35T tubes are in operation. The output of the exciter on any frequency is between 75 and 100 watts—quite a respectable transmitter in itself. It will be noticed that capacitive coupling is used between the vari-

AN AMATEUR'S DREAM

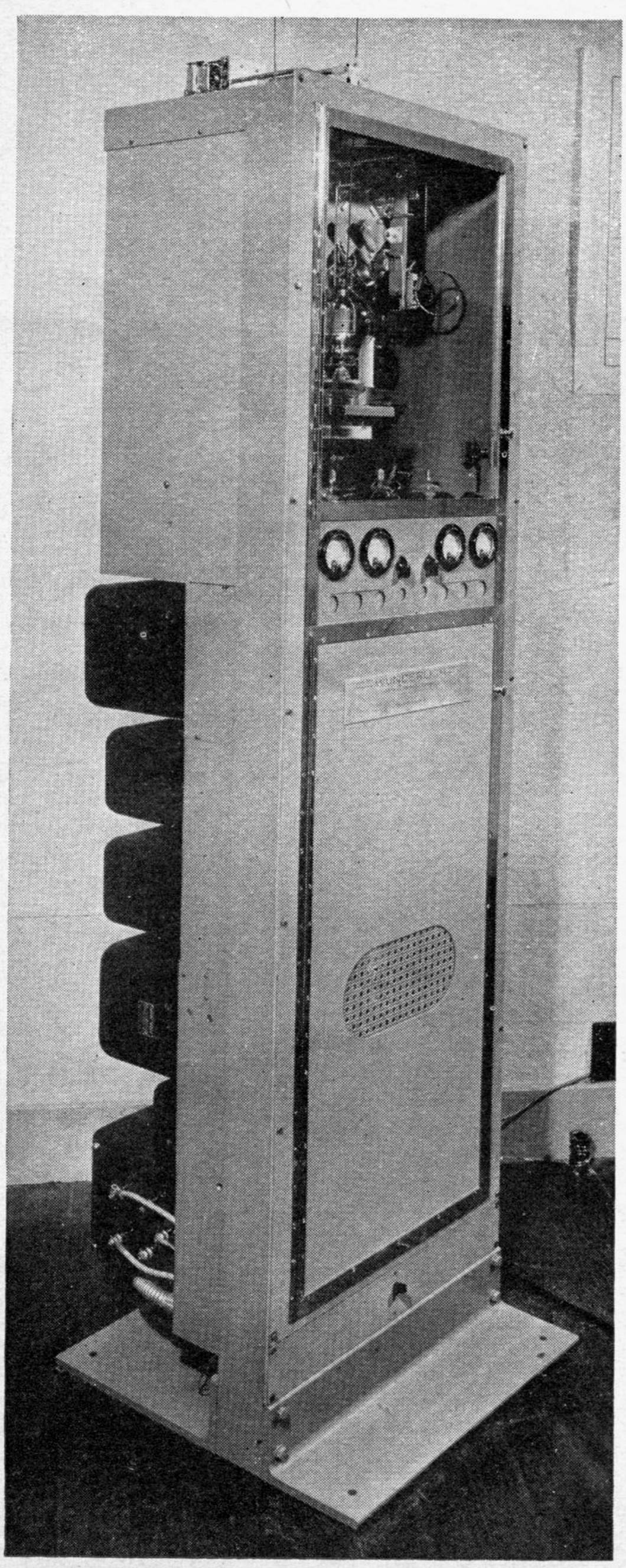

The auto-resonator transmitter at W6USA. Many amateurs visiting the exhibit show more interest in watching the "high I.Q." transmitter tune itself when changing frequencies than they do in operating the key or mike.

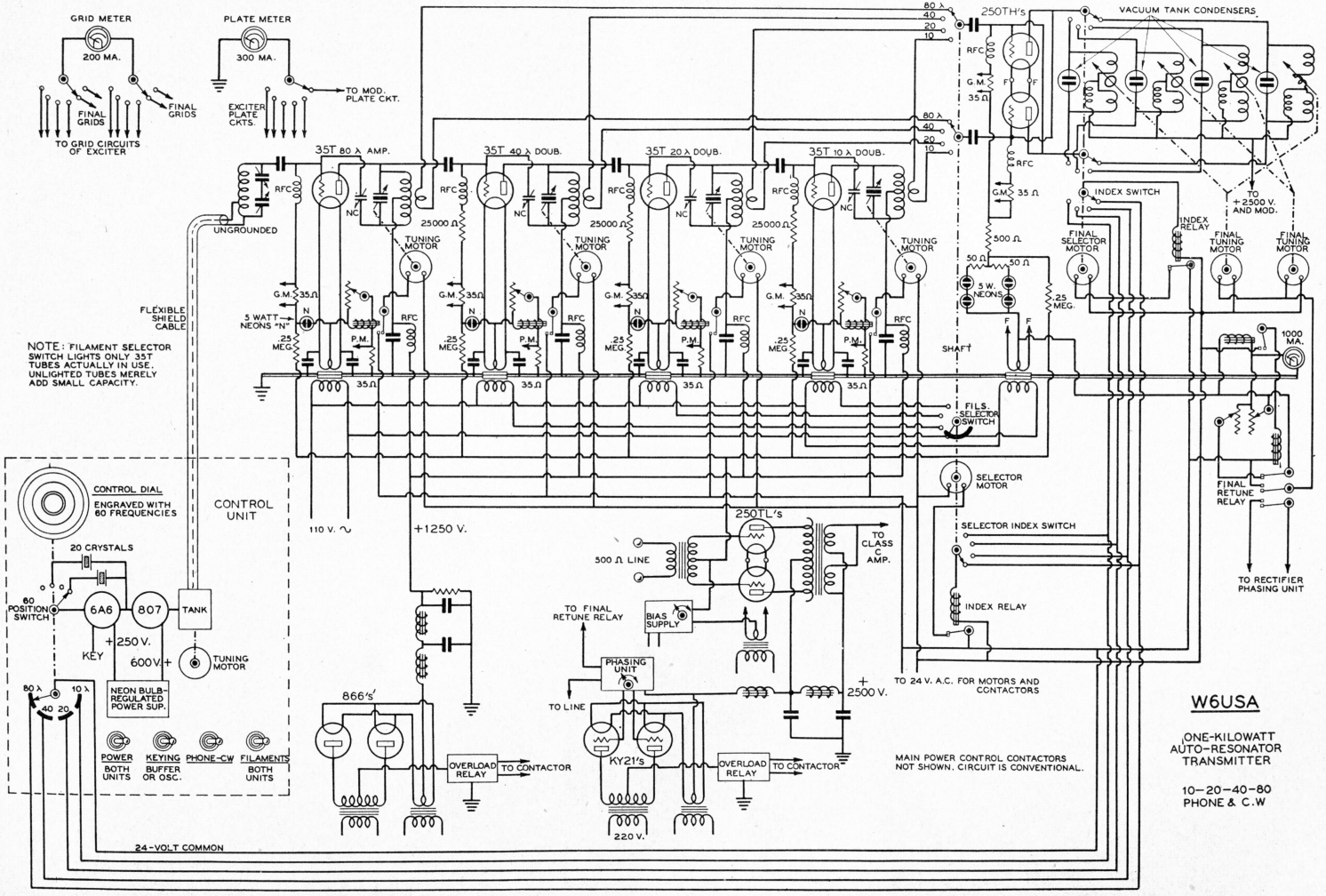

W6USA

ONE-KILOWATT AUTO-RESONATOR TRANSMITTER

10–20–40–80
PHONE & C.W

ous doubler stages, with inductive coupling used for the final amplifier grids. Inductive coupling was used in preference to capacitive coupling only because it was easier to balance the grid drive on the final. The exciter tubes operate with 1250 volts on their plates.

The Transmitter Control Unit

The control unit at the operating position uses a 6A6 (single section) as a Pierce oscillator in order to eliminate a tuned circuit at this point. The oscillator is followed by an 807. The plate circuit of the 807 is also kept at resonance by a tuning motor. The output of the control unit is always on the 80-meter band. A variable-frequency electron-coupled oscillator could have been used instead of crystal control, but where persons unfamiliar with the use of such a device would be operating the transmitter, the use of crystal control was deemed advisable.

All in all twenty crystals are used in the control unit; the fundamental frequencies and harmonics of these crystals give a total of 60 operating frequencies on four bands: twenty on 80 meters, fourteen on 40 meters, eleven on 20 meters and fifteen on 10 meters. To simplify the use of the equipment to the greatest possible extent the 60 frequencies were actually engraved on a 7½" celluloid composition dial which had been painted with black lacquer. The engraving penetrated the lacquer with the result that a panel light is clearly visible through the engraving. By placing colored cellophane behind the dial a very striking effect is produced.

As used at W6USA, four different colors are used to designate not only the different bands but whether the band in use is for class-A or class-B telephony. Green and blue designate "c.w. only," red is for "class-A phone," and yellow is "class-B phone." The contacts on the sixty-point switch are connected so that the proper exciter and final amplifier tank as well as the correct antenna are automatically connected for the desired band when that particular frequency appears on the dial.

For example, one frequency is 3502 kc. When this frequency appears on the dial the transmitter is automatically on the 80-meter band. When the same crystal reappears on the dial as 7004 the transmitter is placed on 40 meters. The same takes places for 14,008 and 28,016 kc.

Aside from the large dial only four toggle switches are on the control unit. One lights the filaments of the control unit as well as those of the transmitter. A green pilot light tells the operator whether or not the filaments are lighted. A second switch turns on the power to the control unit as well as the transmitter. A red pilot light indicates when power is on. A third switch is for phone or c.w.;

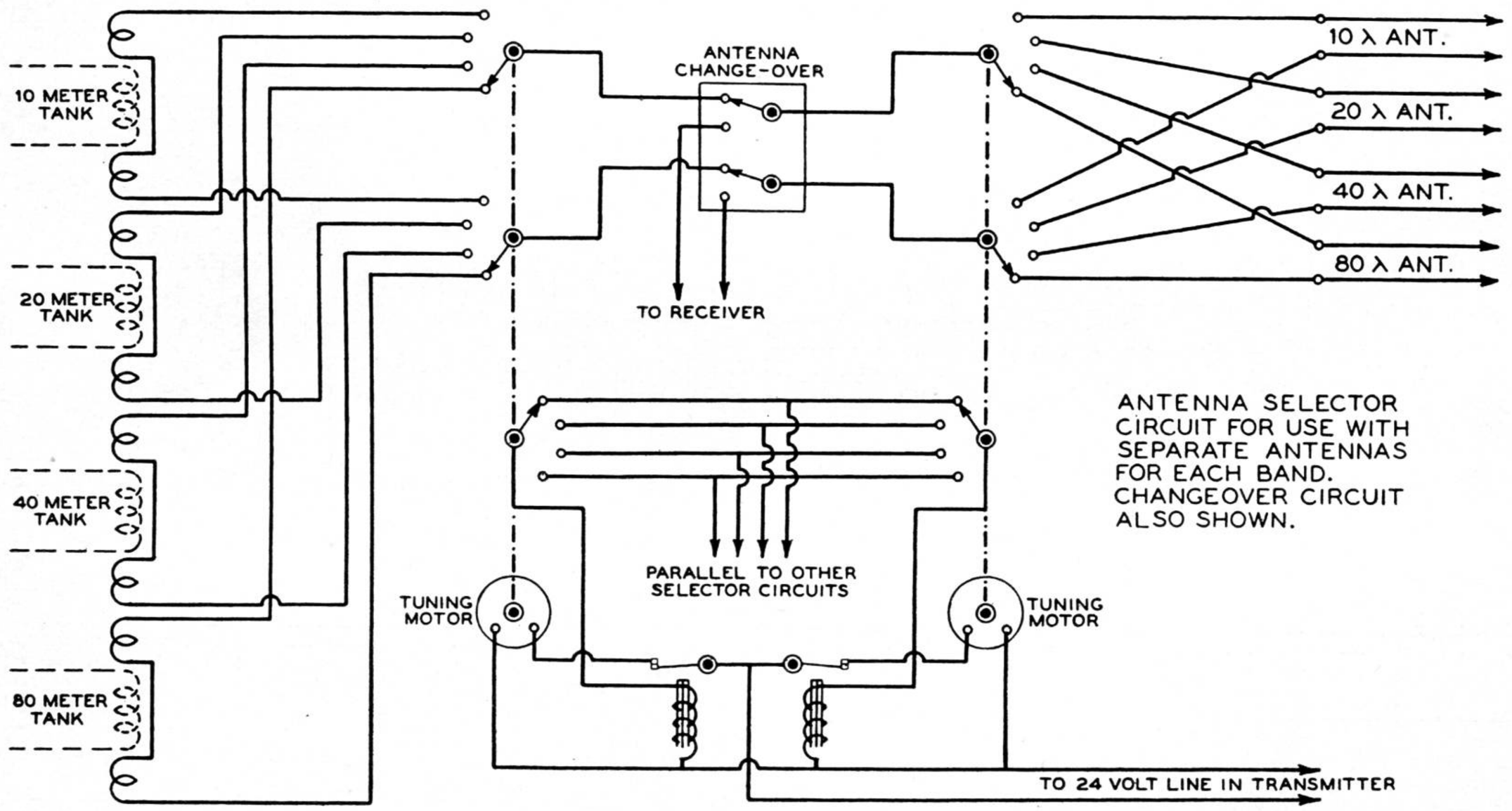

ANTENNA SELECTOR CIRCUIT FOR USE WITH SEPARATE ANTENNAS FOR EACH BAND. CHANGEOVER CIRCUIT ALSO SHOWN.

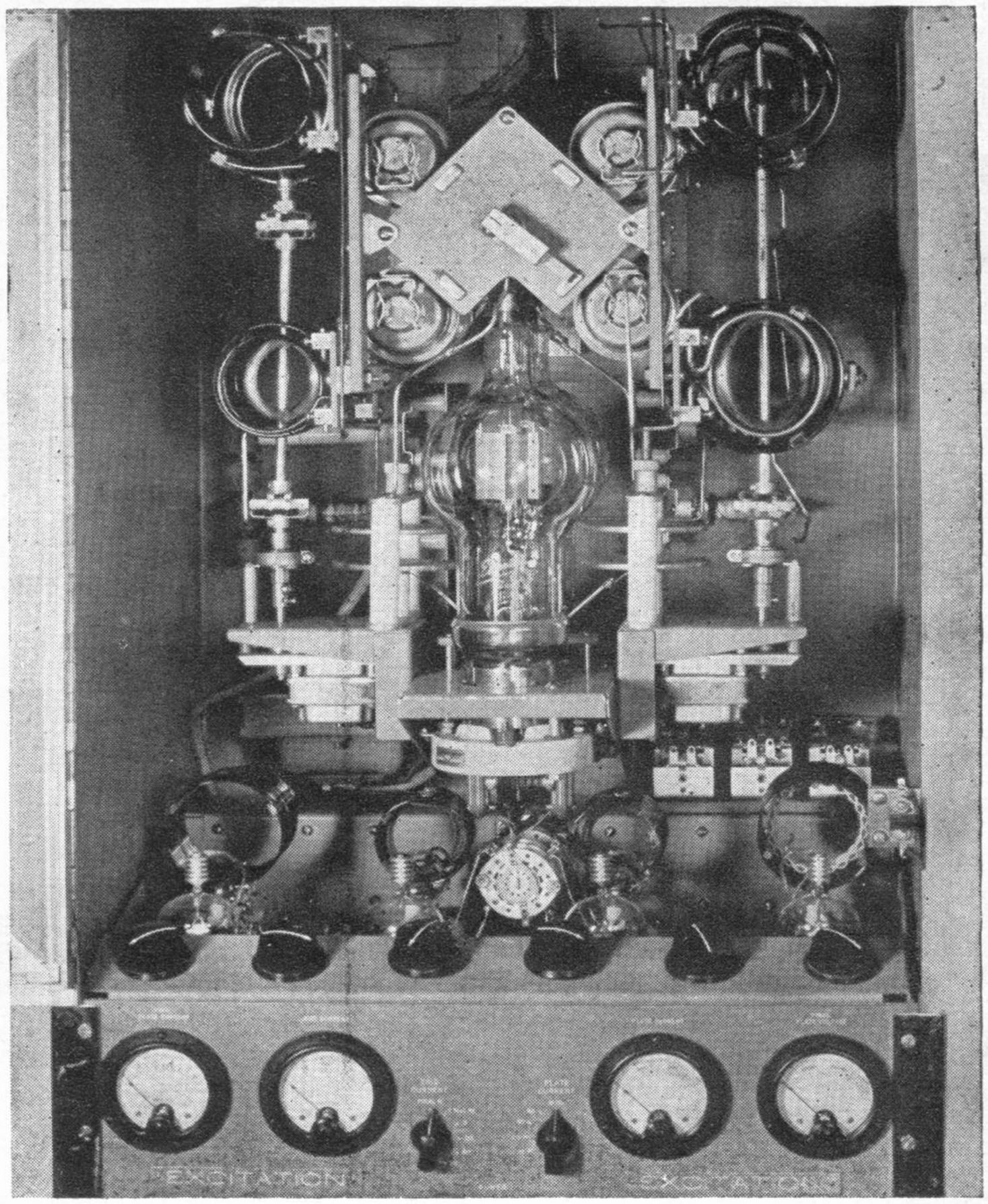

● The heart of the auto-resonator transmitter. B.c.l. tuning motors rotate condensers in the exciter portion and "tuning flippers" in the final amplifier plate tank until resonance is obtained, all in a split-second.

this shorts a contact across the class-B modulator output transformer when c.w. is used, and turns off the 15-watt preamplifier. The fourth selects the keying position.

Class-B 250TL's as Modulators

The modulator uses a pair of Eimac 250TL tubes. It is connected to the preamplifier-driver by means of a 500-ohm line. A vacuum-tube regulated bias supply which is variable from zero to 300 volts supplies the bias voltage to the modulator as well as the rest of the transmitter. As the entire transmitter is biased beyond cutoff, keying is accomplished in the low level stages.

Mechanical Construction

A rather unusual type of construction was used in this transmitter. A standard six-foot relay rack contains all of the power supplies as well as the modulators and the r.f. section. The only external parts are at the operating position and consists of the preamplifier and the control unit. "Bath-tub" rack construction was used as it was ideally suited to mounting the power and modulation transformers. With this type of construction it is possible to mount them with their terminals available from the front of the transmitter.

Tubes and auxiliary equipment are mounted inside the "bath tub" to permit easy access to all leads as well as to all tubes merely by opening the front doors. Thus the inaccessibility drawback of the usual "relay rack" construction is done away with.

The doors both to the r.f. section and to the power supply section have interlocks which break the magnetic contactor circuit when the door is opened. In this particular transmitter the r.f. section has a plate glass front so that the intriguing functioning of the switching and tuning mechanism can be watched.

[*Continued on Page 74*]

Pursuit and Capture of Parasitic "X"

[*Continued from Page 40*]

.00025 μfd. These little changes permitted good modulation up to nearly 100 per cent and our dummy antenna brightened up instead of dying out. Inserting a decoupling choke and condenser in this buffer plate lead then allowed a full 100 per cent modulation. This was shown in the circuit published in April.

After releasing our copy though, we found that this audio oscillation would still occur on some bands whenever modulation reached about 120 per cent or if the final were tuned far off resonance. Of course no one is supposed to modulate this hard (perhaps this is news to some of the boys) but we wanted to remove the last traces, if only for our own personal satisfaction.

We noted that the final filter condenser was only two μfd., and since it must store up energy to supply the final with four times its normal power on modulation peaks, we felt it could well use some more capacity. If a sudden load is jerked out of this condenser its voltage is just bound to drop.

So an extra four μfd. condenser was placed in parallel with the original capacity and the trouble was completely cured. No amount of modulation or detuning would now cause a.f. oscillation to occur. In fact, we found that it was even possible to omit the new choke and condenser in the buffer plate lead, but it was thought well to let them remain for filtering purposes.

The moral of this little tale is just this: Whenever some unusual bug like this occurs, bear in mind that there is a reason for its behavior somewhere and try to diagnose the cause before trying too many guesswork remedies for a cure. And also, be sure to use a sufficiently large filter condenser across the output.

CORNELL-DUBILIER

Starfit ★★★★ TYPE 86

OF THE MONTH

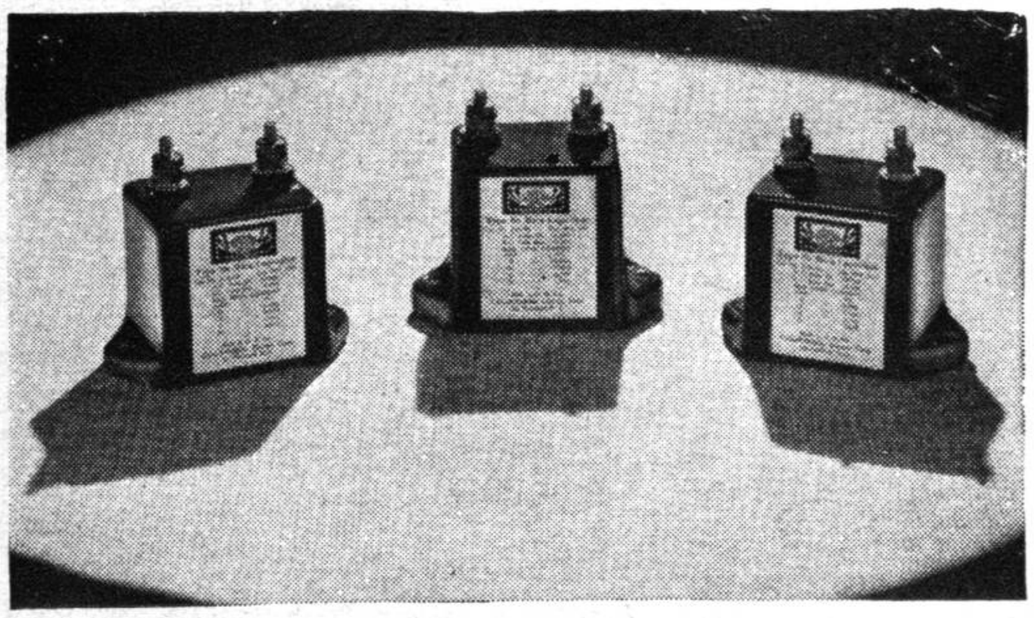

FEATURES OF TYPE 86

● **Patented Series Mica Stack**—Eliminates corona losses. ● **Horizontal Stack Construction**—Wide separation of leads; maximum insulation. ● **Soldered Foils**—Affords high current rating. ● **Mica Separators**—Each section carefully insulated. ● **India Ruby Mica Dielectric**—Lower power-factor; high Q. ● **Vacuum Impregnated Assembly**—Low loss; high insulation; no air voids. ● **Special Low Loss Filler**—Reduces stray losses. ● **Short Heavy Brass Stud Terminals**—Low resistance connection. ● **Black Glazed Porcelain Dehydrated Case**—Low R.F losses.

For a complete listing of the entire CORNELL-DUBILIER line, send for Catalog No. 165A, FREE ON REQUEST.

MICA ● PAPER ● DYKANOL ● WET AND DRY ELECTROLYTICS

CORNELL-DUBILIER ELECTRIC CORPORATION

1017 Hamilton Boulevard, South Plainfield, New Jersey

Cable Address: "CORDU"

1-Kw. Auto-Resonator Xmitter

[*Continued from Page 13*]

The transmitter is actually more rapid than modern receivers in changing bands. The four motors that change the excitation taps, the plate connections to the final amplifier tubes, and the antennas require but one second to operate. This is accomplished almost instantly when the dial on the control unit is turned to the desired spot. Then, when the key is depressed, each stage automatically starts to retune itself if the out-of-resonance plate current was beyond the maximum allowable value. It takes approximately ½ second for ½ revolution of the condenser and resonance is found each half revolution. Normally the exciter plate current is 100 milliamperes for each stage, and the motors start to retune anyone that exceeds 120 ma. A barely perceptible change in the excitation to final grids is discernable with this much variation of plate current.

The final amplifier tank circuits use a "shorted turn" or "flipper" to resonate them with the exception of the 80-meter tank, where a few turns of wire have been placed "variometer" fashion in series with the center of the coil. A single shaft drives the tuning mechanism for each pair of tank circuits. These two shafts could have been driven from a common motor but it was found more convenient to use a separate motor for each pair of coils. It was found that the speed of the motors (60 r.p.m.) was too fast for use with the flippers as resonance is obtained four times per revolution; so a simple dial type planetary gear is used on each shaft to reduce the speed of rotation.

On the exciter stages the out-of-resonance plate dissipation is of no consequence even though the tubes momentarily get quite warm, but on the final amplifier it was thought desirable to reduce the plate voltage during the tuning process. This drop is accomplished by using a phase changing circuit in the grids of the KY21 rectifier tubes. When the final plate current goes beyond 420 ma. a

relay is actuated which in turn actuates a second relay that drops the plate voltage by the above method to any desired amount, starts the tuning motors and reduces the value of shunting resistance across the relay so that they will "kick out" even at the reduced plate voltage.

From the foregoing it is obvious that the various circuits must be absolutely free from parasitic oscillations, as it would be extremely embarrassing for a stage to stop at some unknown frequency of parasitic oscillation. Careful design has produced a transmitter that is essentially free from these troubles.

Working from the plate of one circuit into the grid of another tube is not particularly difficult, as the grid does not normally have any definite frequency characteristics. Loading the final amplifier is a different problem, which can be answered in a number of ways. You must remember we want an antenna that loads the amplifier to 400 ma. clear across each band.

The result of several weeks of operation have been most gratifying. The extremely smooth carrier and excellent, well-rounded modulation show that the transmitter is free from parasitics. The use of the best available equipment, as well as the use of optimum tank circuits for each band pays worth-while dividends in performance. We sincerely hope that you will have the pleasure of contacting W6USA during the coming year or better still that you can visit the very excellent amateur exhibit at the Golden Gate International Exposition on Treasure Island in the middle of San Francisco Bay.

[*All photos by Clyde Sunderland, W6CBF.*]

"XEC" Transmitter Control

[*Continued from Page 20*]

in various stages of disarray attached by flexible leads to their respective padding condensers. This open sort of crystal mounting is not recommended for general use, but has been of value here for experimental work due to the accessibility of the crystals.

The parts under the chassis are arranged for short leads and convenience. Care should be taken to see that the filament transformers have well-clamped cores so that no vibration can arise from this source. In the photograph, T_1 is in the lower right corner of the picture and T_3 above T_2 in the center. No ventilation is provided in the cabinet as purchased, and none seems to be required, due to the use of temperature compensation. However, a row of large holes cut in the back of the box just

Now! A NEW BAND SWITCH FOR HIGH POWER

INDEX HEAD . $3.00
WAFER $3.00

A new six point Band Switch for use with kw. rigs.

Max. Current 8 Amps.
Max. Volts . . 4000
SIZE: 3¼ x 3¼

WRITE FOR DATA

HEINTZ AND KAUFMAN LTD.
SOUTH SAN FRANCISCO CALIFORNIA U·S·A·

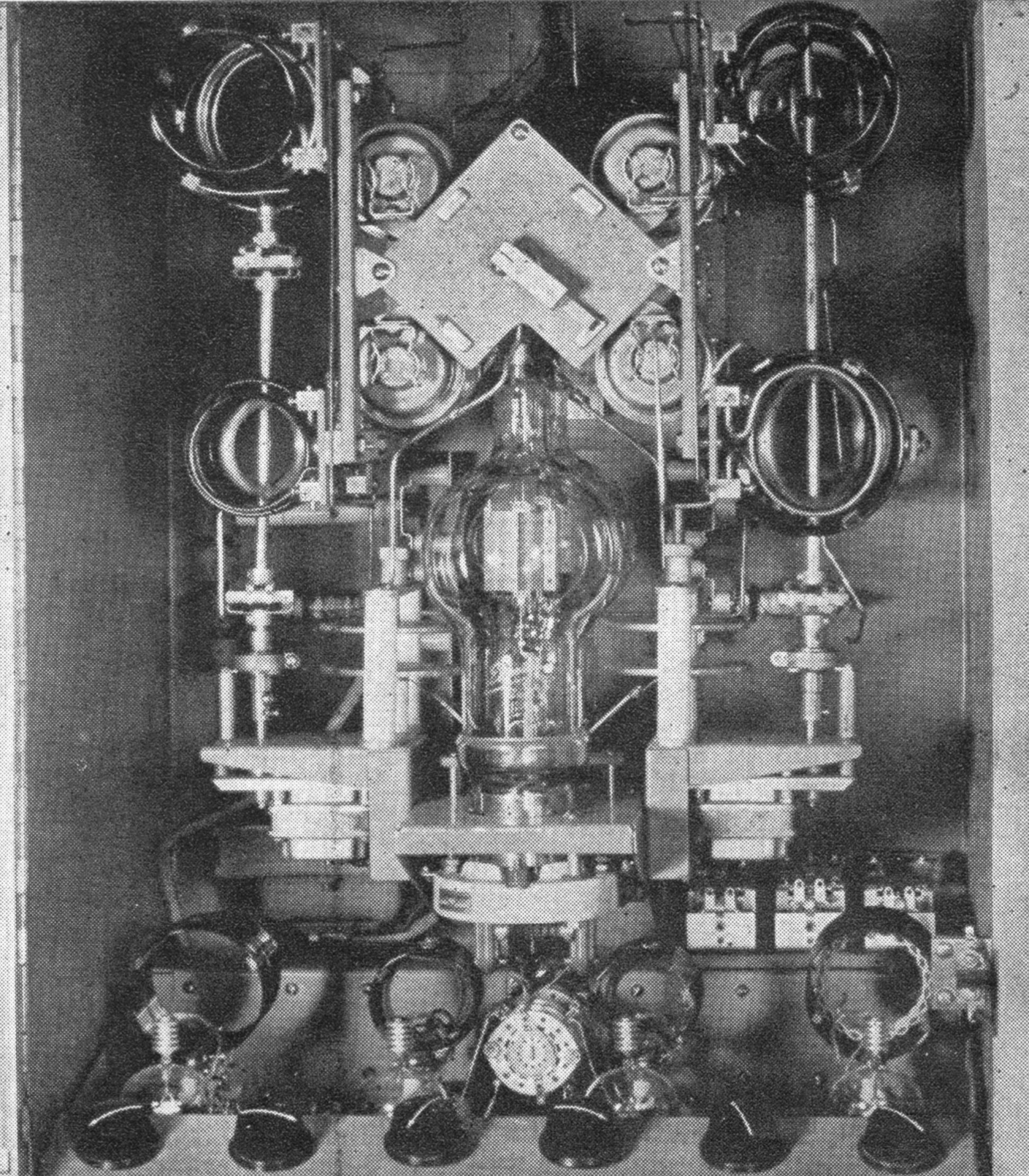

A Radio-Frequency Auto-Resonator

Automatic Remote Tuning for the Transmitter

BY PFC. JOHN F. CLEMENS,* W9ERN

While the idea of remote control of a transmitter is not new, the system described here is of more than ordinary interest because it requires only a single wire. It includes an ingenious scheme for automatic tuning of amplifier stages.

HEREIN is proposed a method of remote control of an amplifier, the system requiring only one control wire. It may be applied to either a push-pull or single-ended stage and requires a minimum of equipment.

First of all, the amplifier must have gang-tuned plate and grid circuits if link coupling to the exciter stage is desired. This requirement is easily met by utilizing tuning condensers of the same plate shape in both plate and grid tank circuits. Since plate and grid impedances are of the same general magnitude and most tank circuits will be designed for a Q of about 12, tracking usually will be obtained with plate and grid tuning condensers of the same capacity.

Next, the tuning condensers must be actuated by a motor. A phonograph motor of the 1720 r.p.m. variety should serve the purpose well and provide adequate torque through a suitable speed-reduction unit. A satisfactory system should result using a 1720 r.p.m. motor with a ¼-inch shaft driving a 3-inch dial-drive pulley which, in turn, drives a ¼-inch shaft belted to a 3-inch pulley on the tuning-condenser shaft. This combination results in a speed-reduction ratio of 144 to 1 and produces a condenser-shaft speed of approximately 0.2 r.p.s.

*612 College Highway, Evansville, Ind.

The "Wobbulator"

This same motor drives the "wobbulator" condenser which is the heart of the system. This condenser is in parallel with the main tuning condenser and consists of a cross-shaped rotor with crossarms about 3 inches long and ¾ inch wide. Only one rotor should be required and it might well be cut from thin sheet aluminum to reduce its inertia. The two stator plates are isosceles right triangles of aluminum of a size to fit approximately in the space between adjacent rotor arms. The condenser rotor is driven by an insulated shaft coupled directly to the motor shaft and therefore the condenser is turned at 1720 r.p.m. Because of the four-bladed rotor, it is apparent that the condenser capacity is varied from maximum to minimum four times per motor revolution, 6880 r.p.m., or 114 r.p.s. The capacitance of this "wobbulator" may be quite small

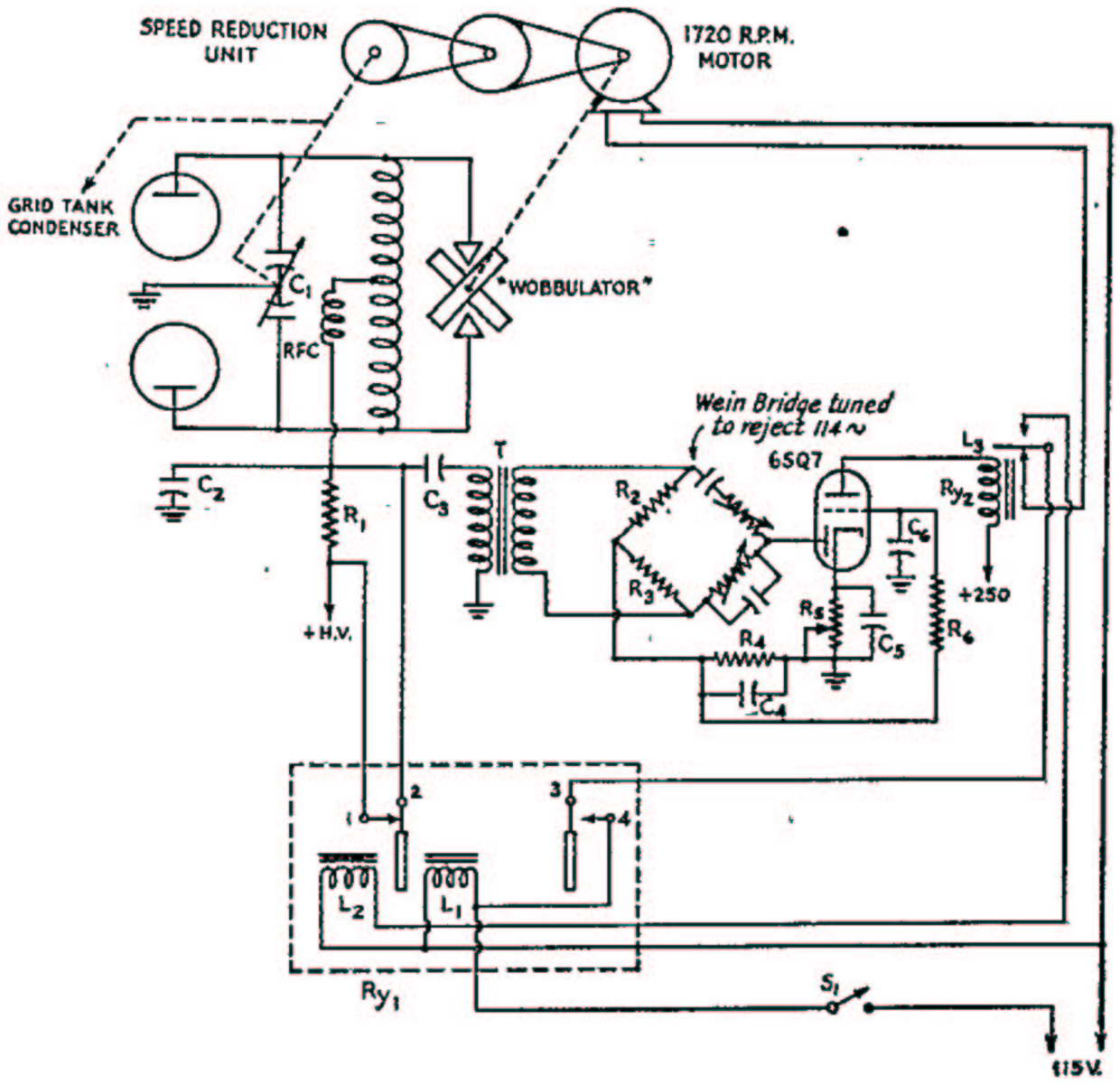

Fig. 1 — Circuit diagram of the automatic amplifier remote resonator.

C_1 — Plate tank condenser.
C_2 — 0.001 μfd.
C_3, C_4, C_5, C_6 — 0.1 μfd.
R_1 — 1000 ohms, approx.
R_2, R_3 — 10,000 ohms.
R_4, R_6 — 0.1 megohm.
R_5 — 5000 ohms.
T — Audio Transformer.
Ry_1, Ry_2 — Relays (see text).

and a method of sliding the rotor on its insulating shaft should be provided to vary the spacing between the rotor and the two stator plates. Two or three micromicrofarads should be about the right variation in capacitance.

Principle of Operation

The diagram of Fig. 1 shows the complete system and the operation is explained as follows. When the push button, S_1, which is located at the operating position, is depressed, L_1 of Ry_1 is energized opening the short circuit across R_1. R_1 prevents off-resonance plate current from exceeding safe limits and provides a coupling impedance to be explained later. The motor also starts, since Ry_2 is normally in the "pull-in" position. The motor drives the main tuning condenser, C_1, until the plate current begins to drop as resonance is approached. A typical graph of plate current vs. tank-condenser capacitance is shown in the drawing of Fig. 2.

Consider the instant that the tuning condenser is passing the region AB on the curve of Fig. 2. Since the tuning-condenser speed is very small compared to the "wobbulator" speed we can consider the plate current as fixed so far as variations caused by the main tuning condenser are concerned. The plate current now is modulated by the capacitance variations caused by the "wobbulator." Since the "wobbulator" varies at 114 c.p.s., a 114-c.p.s. variation occurs in I_b. This varying I_b causes a 114-c.p.s. voltage to appear across R_1 and this voltage is applied to the bandpass filter. But the bandpass filter is tuned to 228 c.p.s. and therefore blocks out the 114-c.p.s. note. Actually a simple RC Wein bridge or Hetrofil will suffice for the bandpass filter since all we need is discrimination against 114 c.p.s.

Since no voltage appears at the output of the bandpass filter the motor continues to run and turns the tuning condenser to the region of CD on the graph, or resonance.

Consider again that the tuning condenser stops in this region. The "wobbulator" still turns at 114 c.p.s. but now an important change has taken place in the plate-current variations. In passing from D to C, the I_b goes through a complete maximum-minimum cycle. This means that the I_b variations are now of twice the frequency of the "wobbulator" capacity variations and as a result a 228-c.p.s. note appears across R_1. This note is passed by the bandpass filter and rectified by the diode section of the 6SQ7. The resulting d.c. is filtered and applied as negative bias to the grid of the triode section of the 6SQ7 causing its plate current to drop and Ry_2 to drop out. Thus Ry_2 stops the motor and energizes L_2 of Ry_1. Ry_1 shorts R_1, restoring full input to the amplifier. Since the motor has stopped, generation of the 228-c.p.s. signal ceases and Ry_2 will pull in again after the d.c. bias has bled off. But contacts *3* and *4* of Ry_1 have opened the motor circuit so that the motor cannot start again until the push-button S_1 is again depressed.

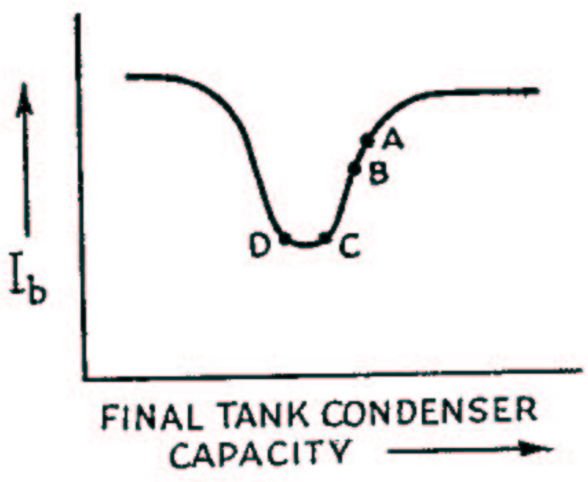

Fig. 2 — Graph of typical amplifier plate current as tank circuit is tuned through resonance.

Complete 360-degree rotation of the tuning condenser is necessary and usually is the rule with transmitting tuning condensers. Inertia of the system should be kept as low as possible so that the motor will stop "dead" when power is removed. A magnetic brake may be incorporated if necessary. The final tank will be somewhat detuned depending upon the position of the "wobbulator" rotor when it stops, but this detuning should be negligible since the I_b variations caused by the "wobbulator" may be of the order of 1 per cent or so of the average plate current. A stage of amplification for the 228-c.p.s. signal before rectification will make possible extremely small values of I_b variation. The system must not be made too sensitive since the distorted waveshape of the I_b variation may contain a second harmonic component even in the AB region. The sensitivity control in the 6SQ7 cathode varies the no-signal bias.

Ry_1 is a locking relay which locks in either position and has separate actuating coils. It is a standard item manufactured by Potter and Brumfield Co. Ry_2 is a common garden-variety of sensitive relay with a 1000-ohm coil.

Since a connection to the 115-volt circuit will be necessary at the remote-amplifier position for filament heating, a single wire may be run from the push-button to the amplifier, utilizing the filament-supply connection as the other side of the remote-control circuit.

In operation the exciter is tuned to the desired frequency, the push-button momentarily depressed and the final plate voltage applied. The final amplifier resonates itself with the exciter and is ready for operation or another frequency shift.

Strays

Western Electric's portable Beachmaster announcing system generates a sound level of speech of 116 db. above standard reference level at a distance of 30 feet from the loudspeaker. When the microphone is talked into in a normal voice, the amplifier delivers 250 watts, the major portion of the energy being radiated in a 50-degree cone. Sounds as though it might get out a little better than we've been doing on two meters recently.

Problems in Automatic Antenna Tuner Design

CAPT. R. R. HAY, USN, W4LW

414 New Hampshire Ave., Norfolk 8, Va.

This Article is Published in an Effort to Familiarize Our Readers with the Current Status of the Development of a Fully Automatic Antenna Tuner

Development of an automatic antenna-tuning unit by the Naval Research Laboratory inspired the writer to adapt such a device for amateur radio use. While an automatic antenna tuner is a convenience in any radio shack, it is particularly adaptable to situations where the antenna tuner must be located remotely from the operating position.

Before we proceed, it is only fair to say that this definitely is not a project for the Novice. The word "problems" was inserted in the title of this article because, in the words of Mortimer Snerd, "It ain't easy!" The many variables involved will require considerable adjustment of values and even modification of some of the circuits involved. Each amateur station has its own problems and the characteristics of the antenna tuner should be selected accordingly.

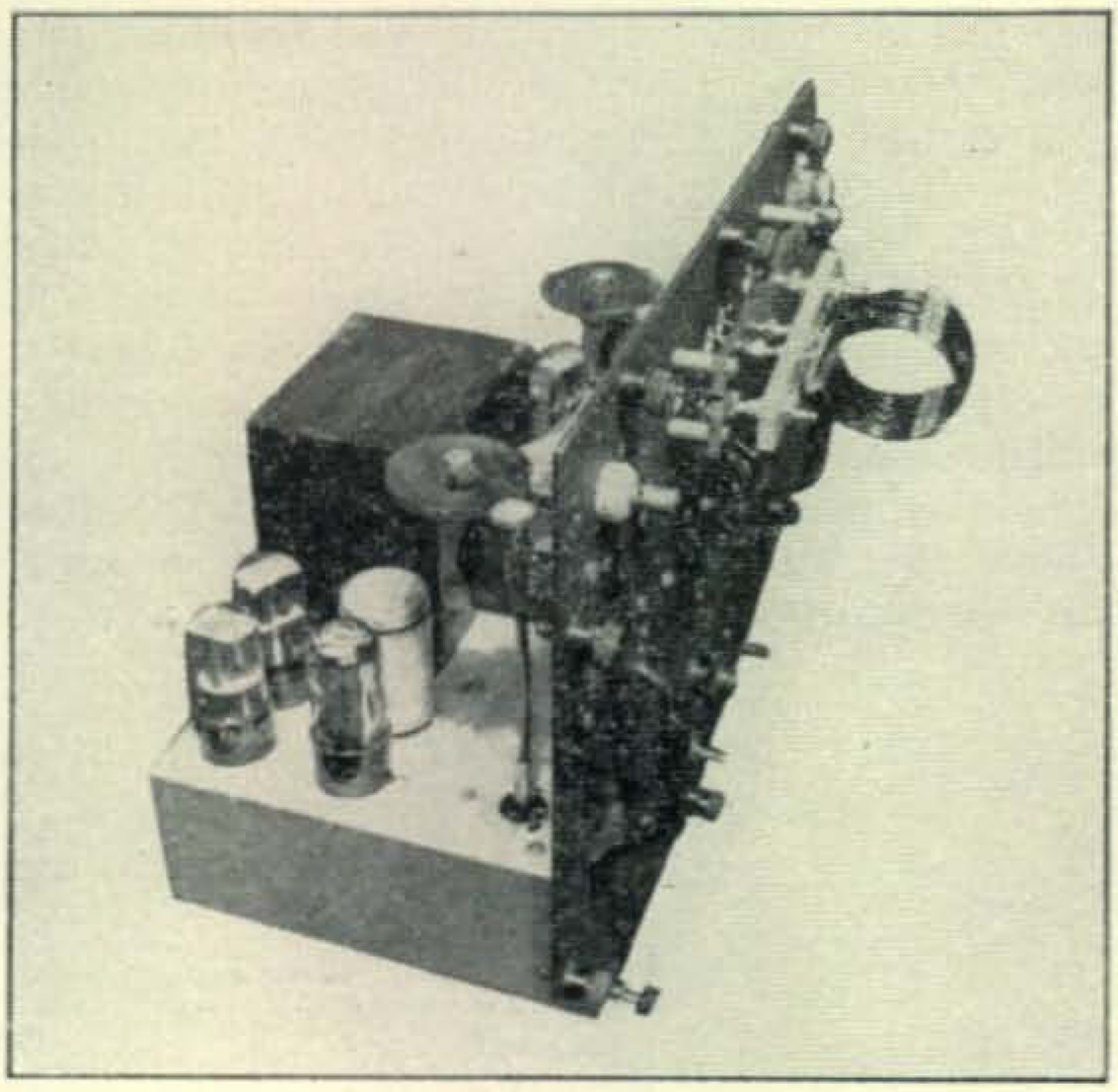

This is a side view of the automatic tuner constructed by the author. The drive control from the magnitude control motor and gearing for the magnitude control condenser, C2, is visible in the foreground. The 20-meter coil has been plugged in the jack bar on the front panel.

To match an antenna to a coaxial line, it is necessary to transform the input impedance of the antenna to an impedance whose resistive component is equal to the characteristic resistance of the transmission line, and to tune out the reactive component of the combined impedance of the antenna and antenna coupler. In order to determine when an impedance match has been obtained, and to produce control signals for adjustment of the antenna tuner, it is necessary to provide a sensing device consisting of an impedance magnitude detector and a phase angle detector. The "True-Matcher," described in the December 1952 issue of *CQ*, provides these sensing functions.

Figure 1 shows a block diagram of the essential elements of the impedance matching system. The outputs of the two detectors are fed to d-c amplifiers, which in turn control differential type relays. These relays control reversible motors which vary the tuning elements of the antenna tuner. The output of the magnitude detector determines the adjustment of the impedance magnitude element of the antenna coupler, while the output of the phase angle detector determines the adjustment of the phase element of the coupler.

The "True-Matcher" exhibits an appreciable amount of reactance. Therefore it should be located as close to either the transmitter or the antenna tuner as possible. In the former case, the reactance will form part of the output circuit of the transmitter; in the latter case it will be included in the tuning of the antenna coupler. If the "True-Matcher" is placed with the antenna tuner, the only connection to the transmitter will be the coaxial line. If the "True-Matcher" is placed at the transmitter,

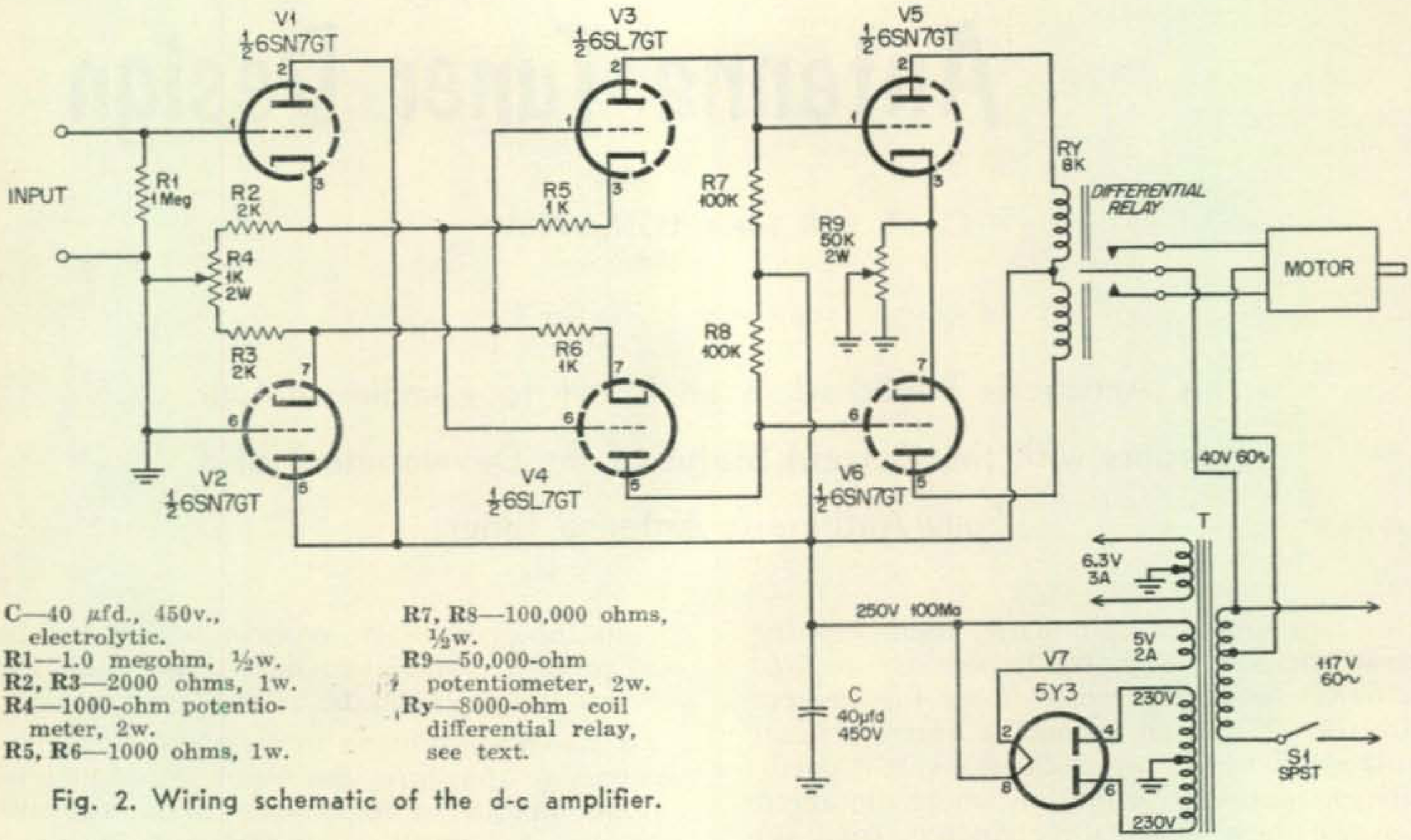

C—40 µfd., 450v., electrolytic.
R1—1.0 megohm, ½w.
R2, R3—2000 ohms, 1w.
R4—1000-ohm potentiometer, 2w.
R5, R6—1000 ohms, 1w.
R7, R8—100,000 ohms, ½w.
R9—50,000-ohm potentiometer, 2w.
Ry—8000-ohm coil differential relay, see text.

Fig. 2. Wiring schematic of the d-c amplifier.

a three-wire control line must be run to the antenna coupler, but it will be convenient to monitor operation and to check the calibration of the detectors.

The two d-c amplifiers used at W4LW are identical and are of the cross-coupled type. The diagram is shown in *Fig. 2*. Both amplifiers and their common power supply are mounted on a 7x12x3-inch chassis, which also carries the reversible motors. Sensitivity of the relay operation is adjusted by varying *R9* in each amplifier. A value of about 45,000 ohms should be satisfactory for preliminary tests. The amplifiers are balanced, at zero input signal, by varying the center tap on *R4*. The correct position is that which leaves the relay in mid-position, i.e., with both sets of contacts open. Readjustment of *R4* may be required as the tubes age or are replaced. When *R4* and *R9* are properly adjusted, the relay will close one set of contacts when a positive input signal is applied and will close the other set of contacts for a negative input signal.

The differential relays are "surplus" items, similar to *Allied Control Company's* type *DS*.

A variety of motors are suitable for use. Those used were selected on the basis of price, size and availability. They are 28-volt d.c. 2-watt, series motors manufactured by the *John Oster Mfg. Co.* These motors have three leads and can be reversed with an s.p.d.t. switch or relay. They operated satisfactorily with about 40-volts, 60-cycle a.c. as power source. The motor shafts are coupled, by means of flexible shafts, to a pair of 2½ to 1 reduction gears. The reduction gears are, in turn, connected to worm drives on the tuning elements. This combination provides an over-all shaft speed of about 10 rpm. This speed proved to be ideal for operation on the 40-meter band, but a speed

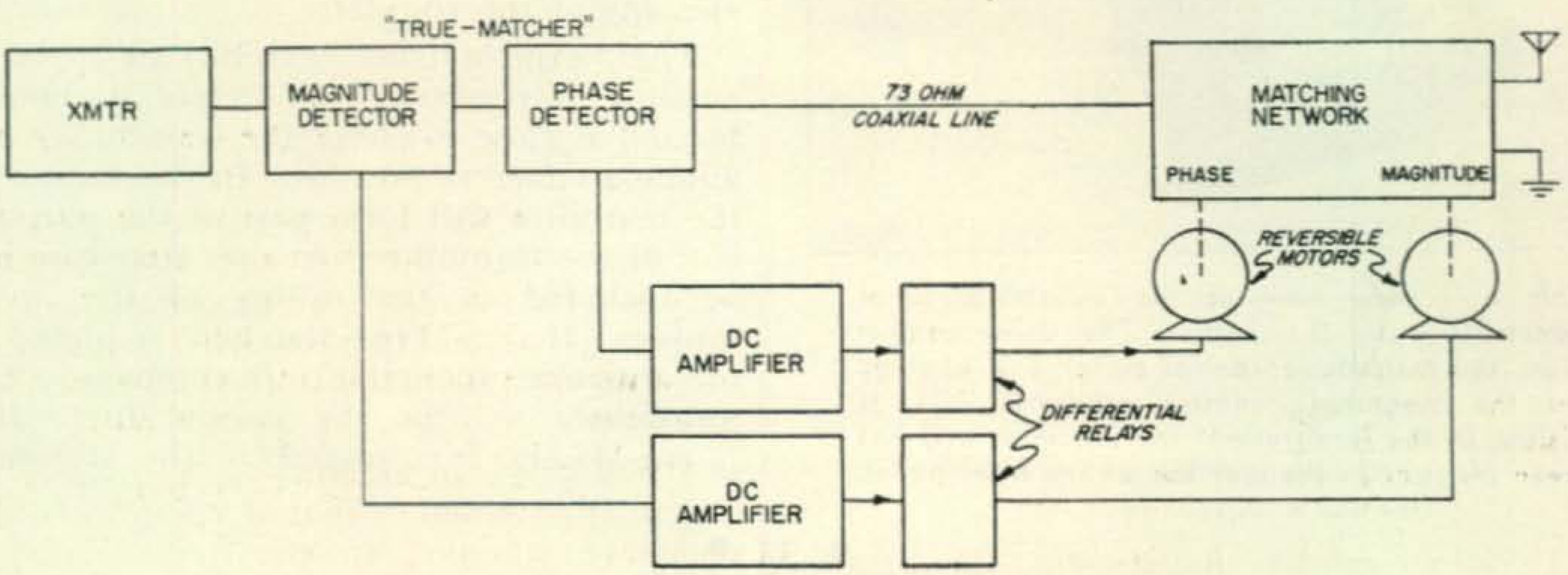

Fig. 1. Block diagram of the impedance matching system.

of about 5 rpm would have been more desirable for the 20-meter band.

The tuning elements (variable condensers or inductances) should either be capable of continuous rotation or have electrical limit stops. Otherwise there is danger of stalling the motors, with subsequent damage. We took the easy way by selecting variable condensers which could be rotated through 360 degrees. These came out of an ARC-5 transmitter and originally had mechanical limit stops, which we filed off. By having condensers capable of continuous rotation, we also eliminated the possibility of getting the motors connected for the wrong direction of rotation, since the direction of change of capacity reverses every 180 degrees.

The d-c amplifiers have a tendency to drift during the warm-up period. This causes the relays to close, even though there is no control signal. There are several solutions to this problem. One is to keep the amplifiers turned on continuously so that they are always warmed up and ready for operation. This may be a little hard on the electric bill, particularly if you don't operate the station daily. Another solution is to keep power off the drive motors during the warm-up period. This may be done either manually or with a time delay device. About ten minutes are required for the amplifiers to warm up to a point where they are stable.

A third, and simplest solution, is to let the motors run during the warm-up period. When the relays open, and the motors stop, you will know the control mechanism is ready for business. *Warning:* Check to see if your motors can run continuously.

Incidentally, the 6SN7GT tubes vary considerably in balance adjustment and warm-up requirements. It is a good idea to have a supply on hand so that several can be tested for performance.

The Antenna Tuner

The next item is the provision of an antenna tuner which will present the coaxial line with a load equal to its characteristic impedance. The transmission line selected for use at W4LW is 73-ohm coaxial cable, since the "True-Matcher" was designed for this cable. The antenna tuner must, therefore, be able to transform the impedance of the antenna to a non-reactive load of 73 ohms.

Before we can design a tuner to accomplish the desired transformation, we must determine the characteristics of the antenna. A thin, half-wave, antenna in space is considered to have an end resistance of several thousand ohms and to be non-reactive. When such an antenna is operated on harmonics of its natural frequency, its resistance may be expected to rise in value. However, when the antenna is mounted vertically and one end brought close to ground, several changes occur.

A study of measurements taken on 35-foot vertical antennas at the Naval Research Laboratory indicate that:

a. The maximum resistance to be expected of a half-wave antenna at the fundamental frequency is approximately 500 ohms. This drops to about 200 ohms for the second harmonic (full wave), and to about 100 ohms for higher harmonics.

b. While the reactance is at or near zero when the resistance is maximum, in the case of the fundamental frequency, the antenna may present a reactive load for harmonic operation.

c. The natural frequency is lower than would be expected, i.e. the antenna "looks" longer than it actually is. For example, a 35 ft. vertical antenna would be expected to have a natural frequency at ½ wavelength of about 13.5 Mc. but actual measurement showed this frequency to be about 9.5 Mc.

d. Both the resistance and reactance will vary considerably between similar antennas, depending upon ground conductivity, proximity of other objects etc., and the variation is greater in the case of harmonic operation.

Figure 3 shows the above data graphically. It must be emphasized that this figure is representative only, and that it will be difficult, if not impossible, to reproduce these characteristics in any particular antenna.

Based on the above information, it was decided to proceed on the following assumptions:

a. The antenna to be used would have enough of its length vertical to acquire some of the characteristics of a vertical antenna.

b. By selecting an antenna with physical length approximately that of a horizontal half-wave antenna, an electrical length of about 2/3 wavelength would result. As indicated in *Fig. 3*, the resulting re-

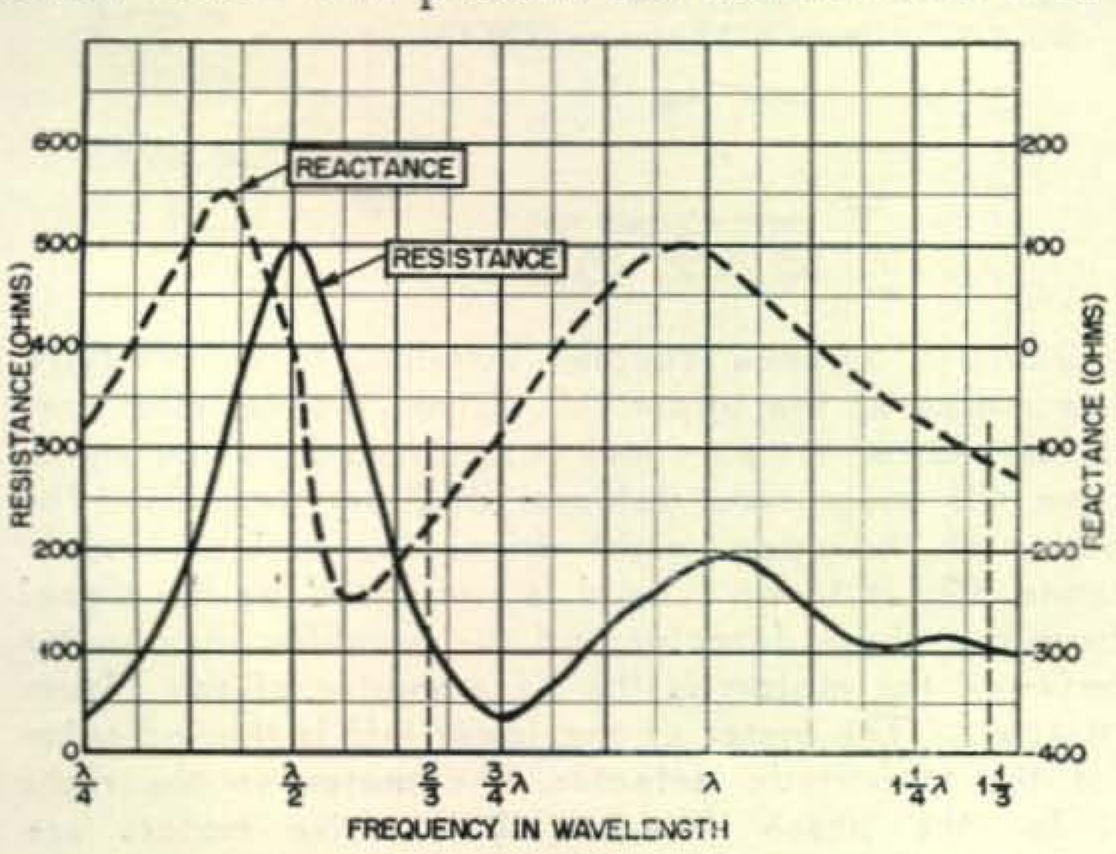

Fig. 3. Vertical antenna characteristics. Note: These curves are representative and probably will not apply to any other particular antenna.

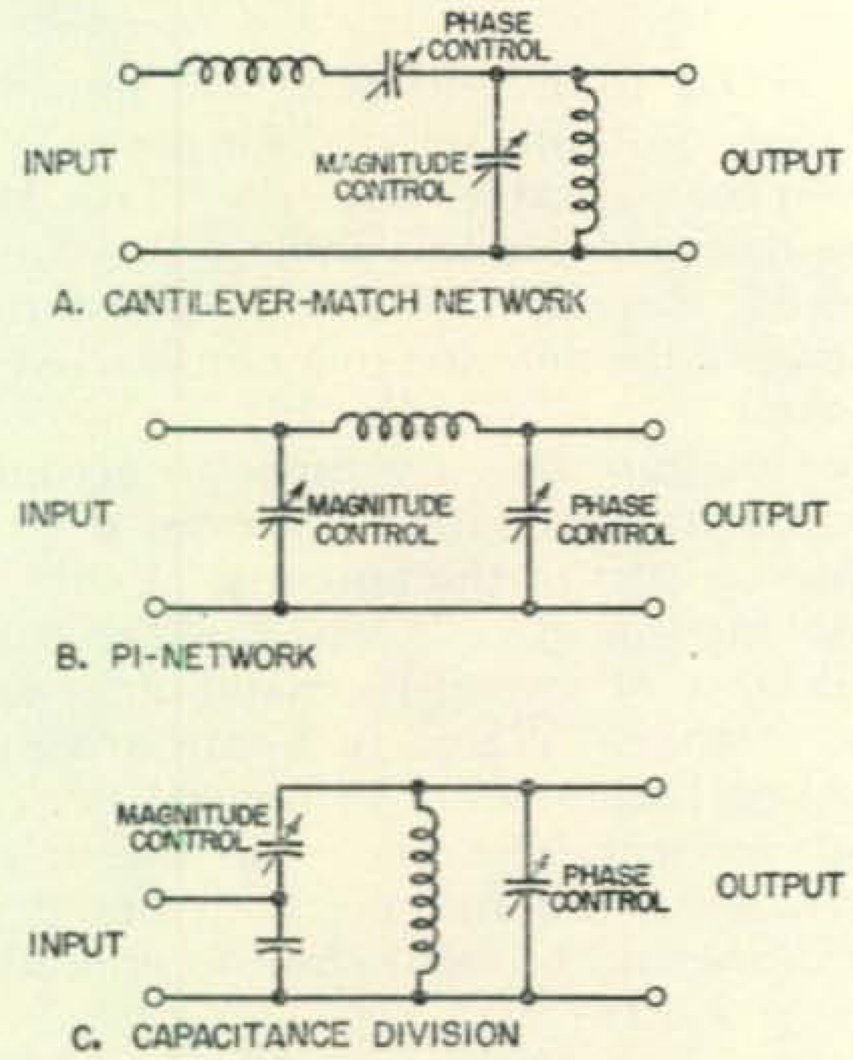

Fig. 4. These circuits may be used to vary the magnitude or phase angle of the impedance in the antenna feed system.

sistance should be about 100 ohms at both the fundamental and harmonic frequencies, and the reactance should be capacitive for all these frequencies.

It was decided to use a matching network with condensers as the variable elements, with plug-in coils. This type of tuner has several important advantages:

a. Changing the inductance by plug-in coils eliminates the losses which would result from using a variable inductance.

b. Variable condensers furnish a convenient, smooth operating, and low-loss method of varying phase angle and magnitude.

c. Changing coils reduces the possibility of "zeroing" on a harmonic of the desired frequency.

The most common type of antenna tuner used at amateur stations is one which employs link coupling to the co-ax line from the transmitter and a variable condenser for tuning a tank circuit. Automatic tuning may be applied to this type of antenna tuner by using the signal from the phase angle detector to control the variable condenser. The visual indication of the magnitude detector meter is used to select and adjust the link coil for magnitude match at mid-frequency for the band in use. Of course, some mismatch in magnitude will result for frequencies at the edges of the band. However, this mismatch will not be serious if a broad-band type of antenna (such as a folded dipole) is used. Even in the case of narrow-band antennas, if the co-ax line to the antenna tuner is comparatively short (ten feet or less) the mismatch will not prevent a satisfactory transfer of power, *provided the phase angle match is "on the nose."*

If you are satisfied with the above solution, you will need only the "True-Matcher," the phase angle control system, and a standard antenna tuner. If you want an exact impedance match in both phase angle and magnitude the problem becomes more difficult.

As suggested in the "True-Matcher" article (December, *CQ*), an *L*-network is adaptable to this use. Design data on *L*-networks may be obtained in the article "R.F. Coupling Circuits" on page 134, May 1952 issue of *ELECTRONICS* Magazine. This was the first type of tuner tested at W4LW, but was discarded because of mechanical difficulties with the variable inductance. If a satisfactory mechanical solution can be obtained, the *L*-network is well worth trying because it is simple and has low losses.

Other circuits which are adaptable to use for variation of both magnitude and phase angle of the impedance are shown in *Fig. 4*. These were tried and discarded at W4LW because of limitations of components available for use in the circuits. If you have suitable components, these circuits offer interesting possibilities. Design data may be obtained from the *ELECTRONICS* article mentioned above.

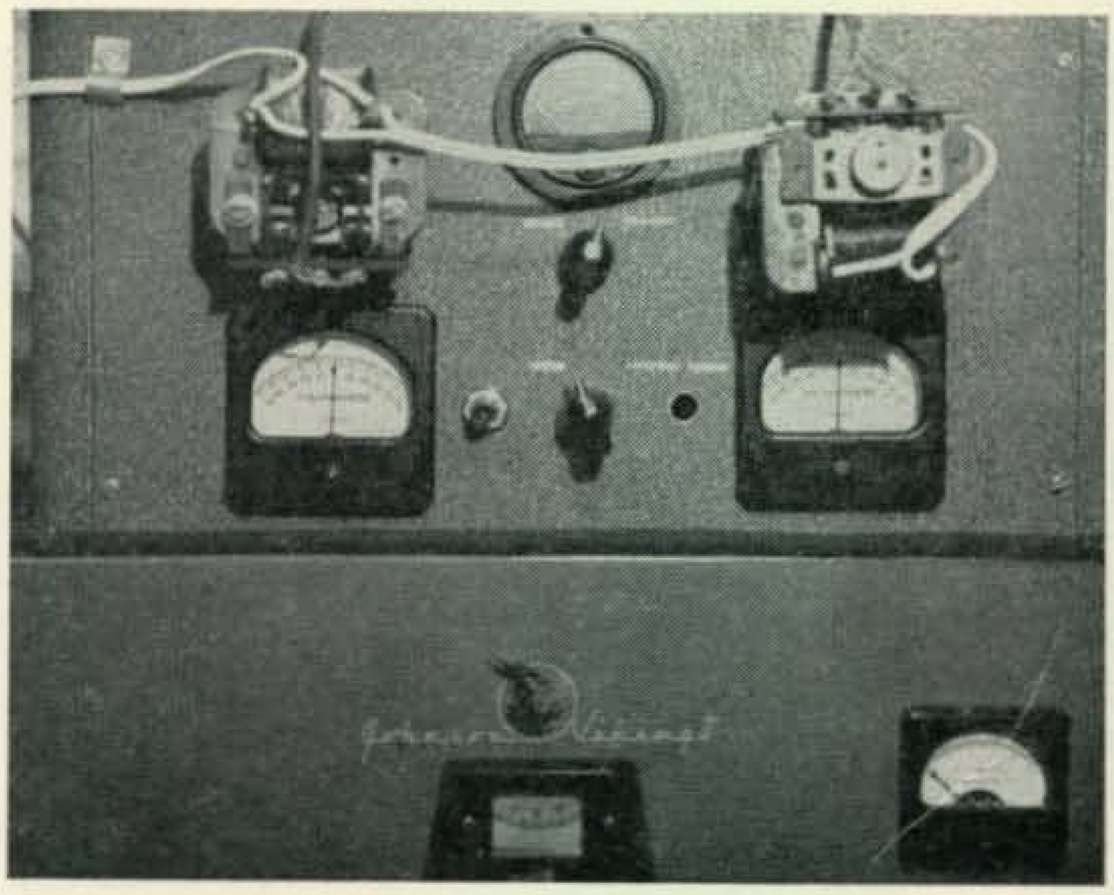

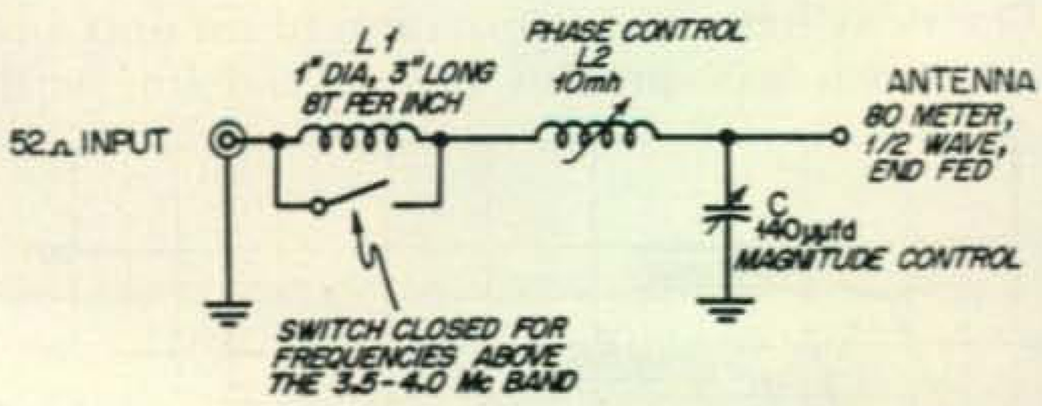

Automatic antenna coupler installation at W4UCN. The motor at the upper left drives the variable condenser, C, at 1 r.p.m. and is controlled by the signal from the magnitude detector and d-c amplifier. The motor at the upper right drives the variable inductance, L2, at 15 r.p.m. and is controlled by the signal from the phase detector and d-c amplifier. The meter between the motors is the r-f ammeter of the "True-Matcher." The meter at the lower left is the indicator for the magnitude detector. The meter on the right is for the phase detector. Both drive motors are Barber-Coleman units with shaded poles, 110-volt, 60-cycle, reversible.

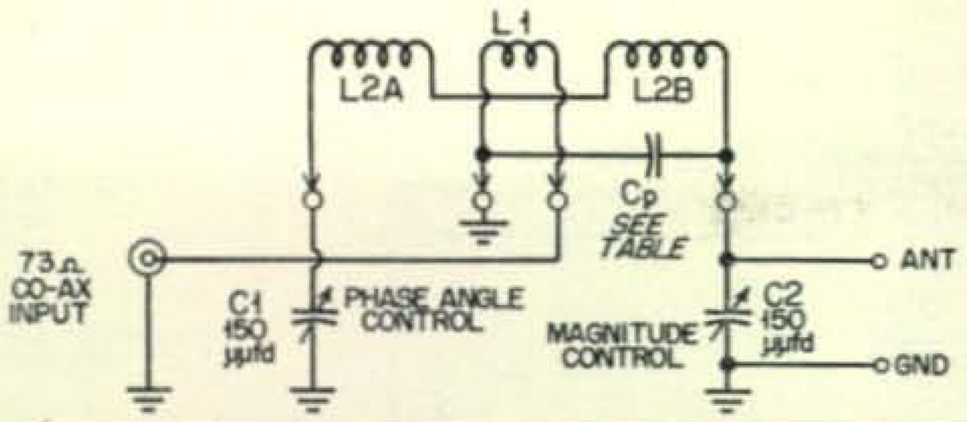

COILS WOUND ON ARC-5 TYPE FORMS: L1 = 1" DIA, L2 = 1 5/8" DIA, 3/8" BETWEEN L2A & L2B	BAND	FIXED LINK COILS CONSTRUCTED FROM B & W INDUCTOR, 2" DIA 10 TURNS PER INCH.
L1 = 4 TURNS L2A = 24 TURNS, 1 1/8" LONG L2B = 10 TURNS, 3/8" LONG C_p = 0	80	SATISFACTORY SOLUTION NOT OBTAINED WITH FIXED LINK.
L1 = 4 TURNS L2A = 11 TURNS, 1" LONG L2B = 5 TURNS, 1/2" LONG C_p = 460 µµfd	40	L1 = 5 TURNS L2A = 8 TURNS L2B = 8 TURNS, 1 1/4" FROM L2A C_p = 80 µµfd
L1 = 2 TURNS L2A = 5 TURNS, 1" LONG L2B = 3 TURNS, 3/8" LONG C_p = 0	20	L1 = 3 TURNS L2A = 4 TURNS L2B = 3 TURNS, 3/8" FROM L2A C_p = 0

Fig. 5. Suggested antenna tuner for an unbalanced adaptation. Derived from a design by W2FTW (see Fig. 6b).

The characteristics which were desired for the system at W4LW are those which would permit the following operation:

a. On 80, 40, and 20-meter bands with a single antenna.
b. Transmitter to be loaded into a dummy antenna and then switched to the antenna tuner without appreciable change in loading.
c. Adjustment of the antenna tuner fully automatic within each amateur frequency band.
d. System in operation at all times to permit rapid frequency shift and to compensate for variations caused by wind and weather.
e. Maximum power handling capacity—150 watts.

An end fed, single wire antenna offers the simplest solution to operation on a series of harmonically related frequencies. Because this type of antenna has a tendency to radiate unwanted harmonics, it is necessary that the transmitter be as free from such harmonics as it is possible to make it. It is also highly desirable to place a low-pass filter in the transmission line to avoid TVI.

The circuit finally chosen is a combination of link coupling and *pi*-section network, and was inspired by W2FTW's article in the November, 1952 issue of *RCA Ham Tips*. The circuit diagram is shown in *Fig. 5*. This circuit provides the flexibility of a *pi*-section tuner without requiring the large values of capacitance required for the latter type. *C1* is controlled by the phase detector signal and *C2* is controlled by the magnitude detector signal.

First experiments were made with coils wound on forms taken from ARC-5 transmitters. Each of these forms is 1⅝ inches in diameter and has a rotor mounted inside, near one end. A link coil wound on this rotor has the facility of variation through 360 degrees. In addition to having the correct number of turns and the correct degree of coupling, the *polarity* of coupling must be correct. With a rotor such as provided in these ARC-5 coil forms, polarity may be reversed by turning the rotor 180 degrees.

It was planned to replace these ARC-5 coils with coils capable of handling higher power. Coils for 20 meters and 40 meters were constructed from *B & W Inductor #3707* (2" diam., 10 turns per inch), with fixed links. However, a satisfactory solution was not obtained for the 80-meter band because the correct link coupling was not achieved. Consequently, the original ARC-5 coil is still in use for this band pending procurement of a variable link coil assembly.

One adjustment in the antenna coupler should change more rapidly than the other in order to prevent the controls from "hunting." With both condensers of the same value, and driven at the same speed, this probably will occur naturally since phase angle will change faster than magnitude. If other condenser values are used, it may be necessary to change the gear ratio for one control or reduce the voltage on the drive motor in order to provide a difference in the rate of correction between phase and magnitude.

Preliminary adjustments are as indicated below:

a. Set the transmitter near the low frequency end of the 80-meter band and adjust it for maximum power into the dummy load in the "True-Matcher."
b. Disconnect the control line to the d-c amplifiers.

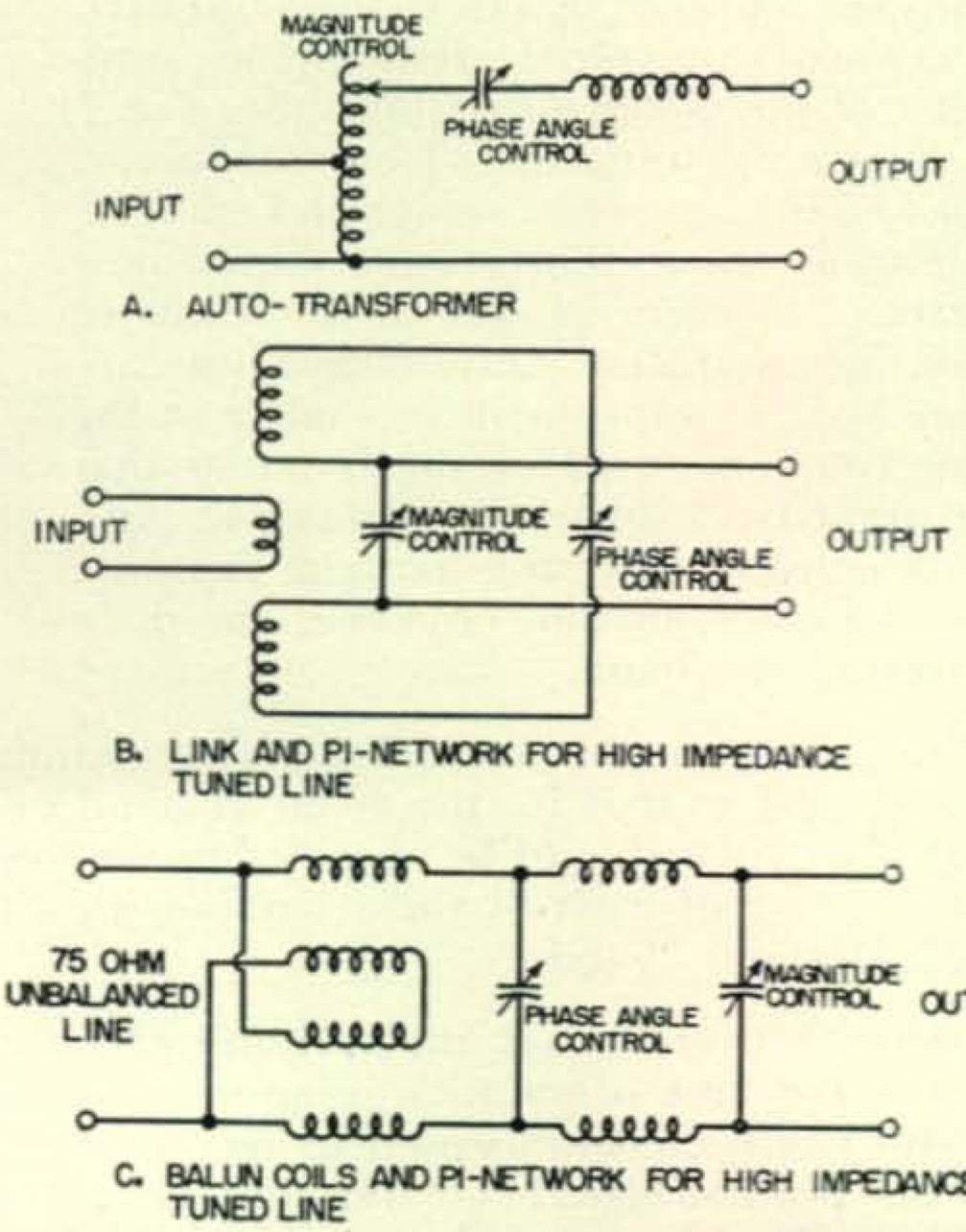

Fig. 6. Additional circuit suggestions for the experimenter. These might be used in certain installations to replace the circuit recommended by W4LW in Fig. 5.

c. Plug in the 80-meter coil, and set *C1* and *C2* near maximum capacity.
d. Switch the transmitter from the dummy load to the antenna tuner.
e. Manually adjust *C1* for phase angle match and *C2* for impedance magnitude match as indicated on the "True-Matcher" meters. If a match cannot be obtained, adjust the position of the variable link, or reverse the link connections if a fixed link is used, and try again. *This link coupling adjustment is very important.* Its effect can be observed on the meters of the "True-Matcher." If a phase match cannot be obtained, it may be necessary to add padding capacitance in parallel with *C1*. If a phase match can be obtained but not one in magnitude, it may be necessary to add padding.
f. When a satisfactory match has been obtained at the low frequency end of the band, shift the transmitter to the high frequency end of the band and readjust for maximum power into the dummy load. Energize the d-c amplifiers and "zero" them by adjusting *R4* so that relay contacts remain open when the transmitter is not energized.
g. Un-plug the meters from the "True-Matcher" and substitute the input connections to the d-c amplifiers. (If it is desired to retain the meters to monitor operation, it will be necessary to insert a resistance of at least 150,000 ohms in series with each meter in order to prevent reduction of signals to the amplifiers. This will, of course, reduce the sensitivity of the meter indications. (See *Fig. 7*)
h. Switch the transmitter from the dummy load to the antenna coupler and energize the transmitter. The motors should now drive condensers *C1* and *C2* and come to rest when phase and magnitude are matched. If adjustment was made at the low frequency end of the band so that an impedance match was obtained with both condensers near maximum capacity, no difficulty should be experienced in covering the band.

Adjustment for the 40 and 20-meter bands will be similar to that for the 80-meter band except that a match should be obtained at the low frequency end of each of these bands with *C1* and *C2* at about 75 $\mu\mu$fd.

It was discovered that the transmitter must be completely free of parasitic or spurious emission, since such emission would be out of phase with the normal signal. A transient parasitic, which appeared for a fraction of a second when the transmitter was keyed, gave us some trouble on 20 meters by causing the differential relays to close momentarily every time the key was closed. Excessive chirp or key click may be expected to produce a similar effect.

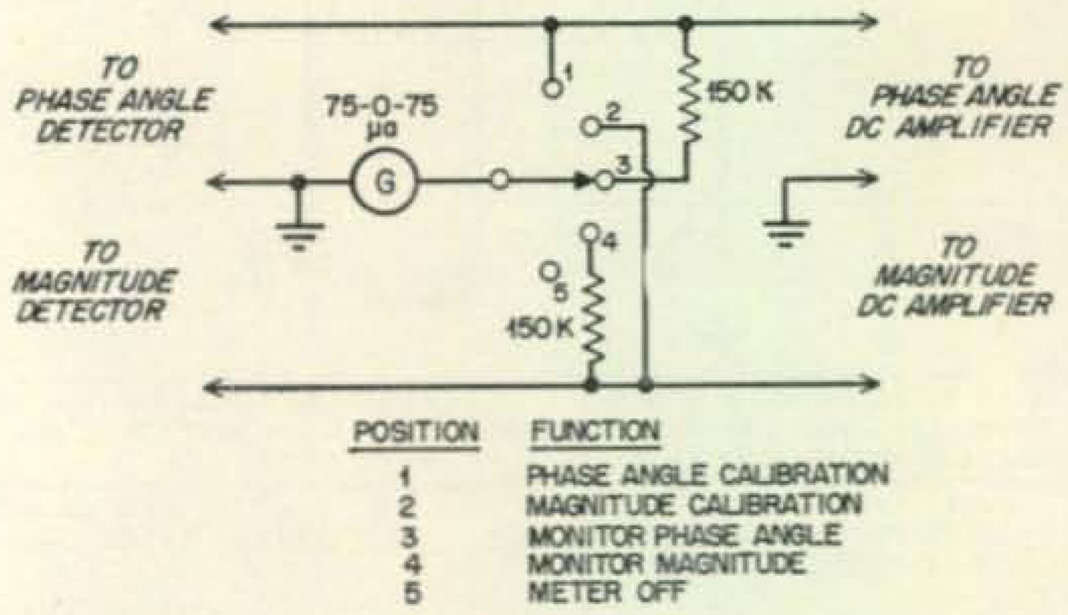

Fig. 7. Switching arrangement for use of a single meter with the "True-Matcher."

By this time you are probably wondering why anyone should go to all this trouble to build an automatic antenna tuner. Other than the obvious advantage of remote operation, there is another desirable feature of this device. It can produce an impedance match faster and more accurately than you can do it by hand. For example, a frequency shift from 7005 to 7295 kc. can be handled by the automatic tuner in less than 2 seconds. Ordinary frequency changes of 10 to 20 kc. require only a fraction of a second. Since the tuning of the transmitter itself is done with a dummy antenna, there is no unnecessary QRM during the tune-up. Changes in antenna characteristics because of weather, movement of the antenna or nearby objects, etc., result in automatic compensation by the antenna tuner.

The "True-Matcher" samples your outgoing signals continuously and controls the automatic tuner in order to provide optimum use of the transmitted power.

Additional Notes

Substitution of a 6SL7GT tube for the 6SN7GT in the final stage of the d-c amplifier was tried and found to be acceptable, although it reduced the sensitivity of the amplifier slightly. . . . 6SN7GT's and 6SL7GT's with matched sections may be selected by checking them on a tube tester. Both sections should give the same meter reading on the tester and the meter needle should come to rest in a few seconds. Erratic movement of the needle will indicate an unsatisfactory condition for use in the d-c amplifier. . . . If it is desired to use miniature tubes, substitute 12AU7's for the 6SN7GT's and 12AX7's or 12AT7's for the 6SL7GT's. . . . Initial tests may be simplified by the use of a grid dip meter. This can be used to determine if the tuner, with antenna and co-ax line attached, will tune to the lowest frequency for any particular band. . . . Suitable control equipment may be constructed from a *Zenith* remote control unit; it requires 75 watts of 110-volts, 60-cycle power. Will drive ¼" shaft at 4 rpm. Includes transformer, reversible motor, reduction gear train and reversing switch. Available from *Herbach and Rademan, Inc.*, 1204 Arch St., Philadelphia 7, Pa.

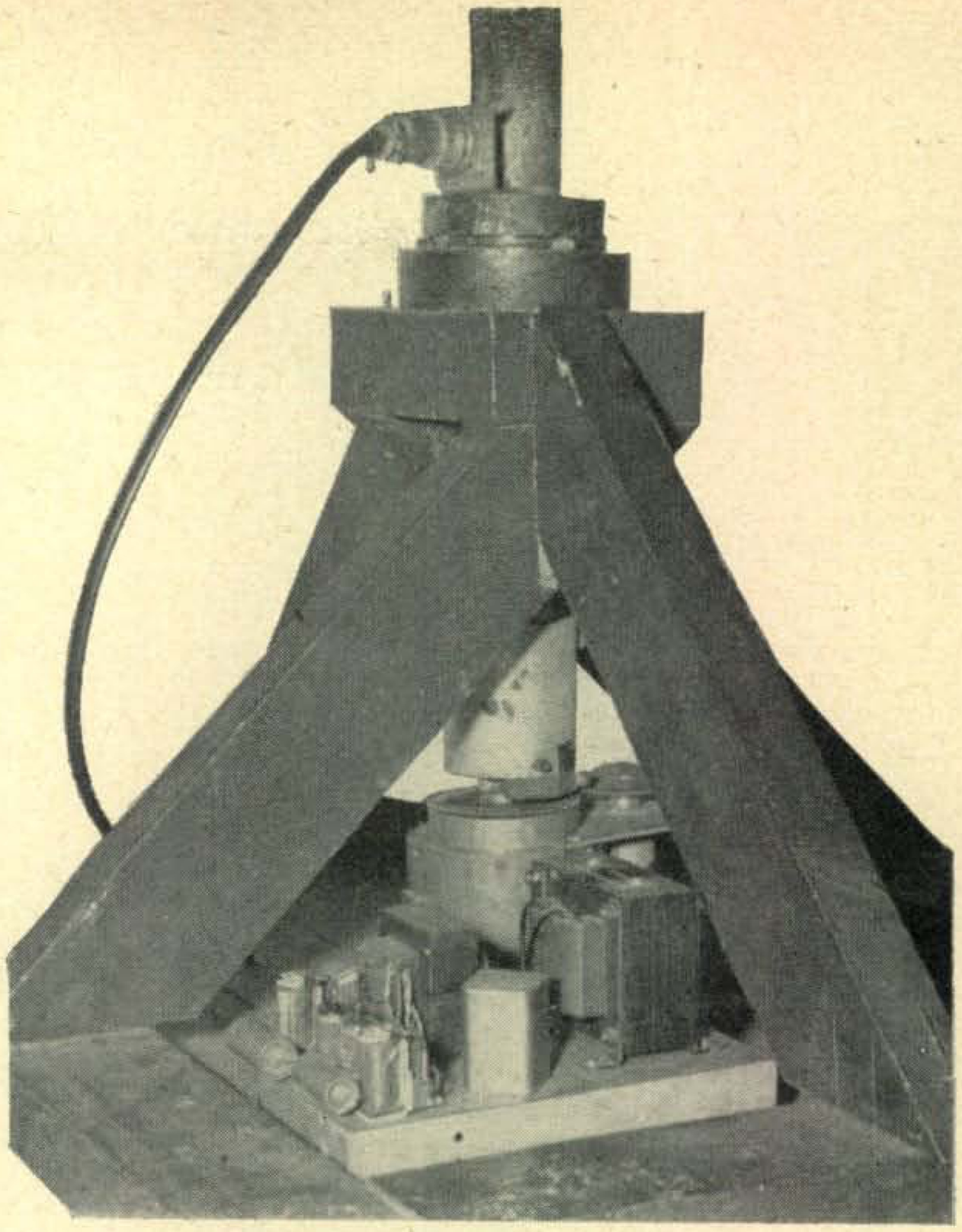

The Servo amplifier and rotator is mounted in the attic at the base of the 20-meter beam. Directly above the bearing is the coaxial feedline input connector.

This is the Solution to the Problem of Designing your Antenna Rotator—Let a Servo Point the Beam Automatically

Antenna Rotation with a Servo-Mechanism

HENRY G. ELWELL, JR., W2JKH

350 Hamilton Place, Hackensack, N.J.

The usual procedure in changing the direction of a remotely-controlled rotary beam is to snap on the motor switch, watch the direction indicator until the beam reaches the desired position, and then snap off the switch. Many amateurs attempt to set their VFO's, fill out their logs, monitor the band, or what have you, while the beam is turning. Quite often the result is that the next time they glance at the indicator they discover that the antenna has passed the desired position and is continuing on its way or has come to rest against the rotation stop. As W2JKH, however, I merely turn the antenna controller to the desired position and forget it, secure in the knowledge that, when the antenna reaches this position, rotation will cease. A simple servo-mechanism is the secret.

How a Servo-System Works

Figure 1 is the block diagram of a basic servo-system, whether it is used to steer an ocean liner or to operate a furnace thermostat. The *Mixer-Feedback* circuit generates the signal that controls the system. When it is balanced, no error signal is fed into the amplifier, and no power is fed to the motor. Should the position of either the load or the controller be changed, a signal of phase and magnitude to correspond to the displacement is developed, causing the motor to move sufficiently in the opposite direction to re-establish circuit equilibrium.

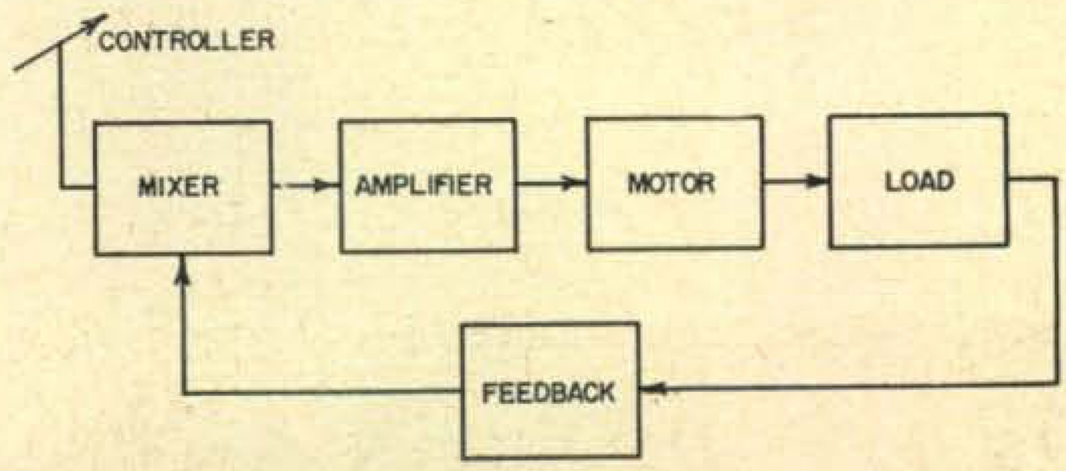

Fig. 1. Block diagram of the basic servo-system.

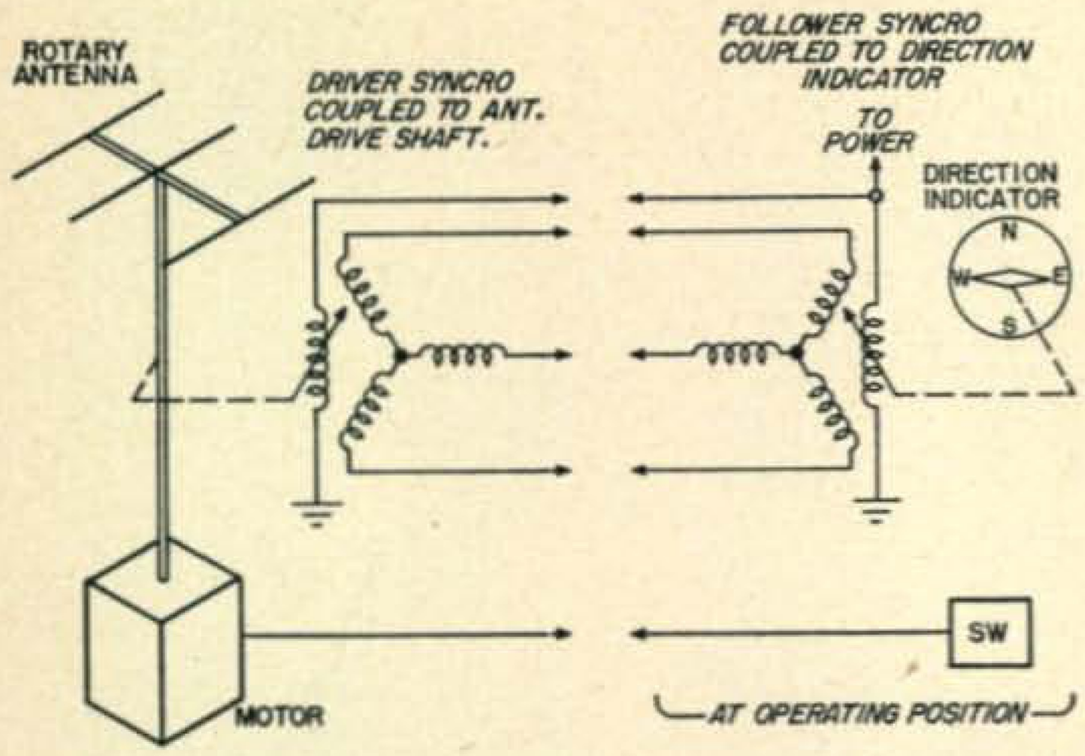

Fig. 2A. Conventional rotary beam antenna with synchro attachment for direction indication to the shack.

Various devices are used in the *Mixer-Feedback* loop. One satisfactory arrangement is a pair of Syncro or Selsyn motors of the type frequently used as antenna direction indicators. *Figure 2A* shows how they are employed as direction indicators and *Fig. 2B* in a servo-system. In *Fig. 2A* both rotors are connected to an a-c power source. When they are in the same relative position, the voltages induced into the stators are equal in value and opposite in phase; therefore no torque is developed. As the beam moves, the "driver" Syncro rotor is turned, thereby generating a torque, and the "indicator" rotor turns to restore balance.

In *Fig. 2B,* only the "driver" rotor is connected to the power source. The "mixer" rotor is connected to the input of the amplifier. To understand the operation of the Syncros in this application, consider them as a two-part transformer, with variable coupling between the primary and secondary windings. The interconnected stators act as the coupling medium between them.

When the rotors are in the same phase, coupling is maximum, and when the phase difference is ninety degrees, coupling is minimum. The ninety-degree position is "normal," displacement from it couples part of the supply voltage into the amplifier through the "mixer" to act as the error signal mentioned above.

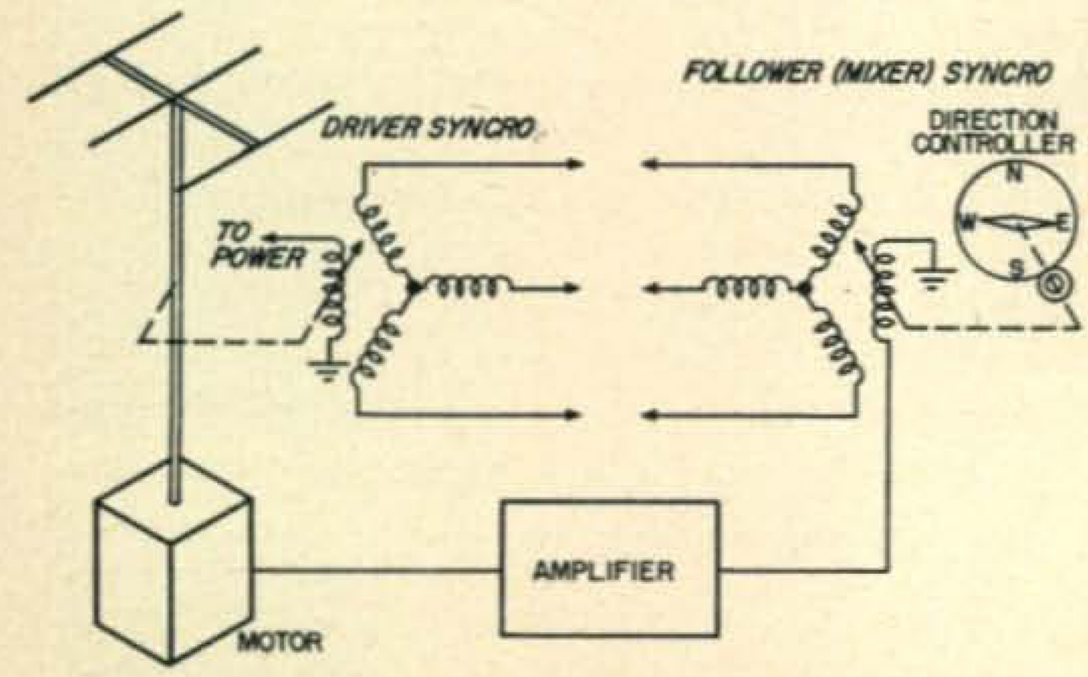

Fig. 2B. Servo-system showing the slight difference between this automatic system and the one pictured above in Fig. 2A. Addition of the amplifier diagramed in Fig. 3 makes all antenna positioning fully automatic from the operating position.

There are two general types of servo amplifiers, the *continuous-control* type and the *relay* type. Where it is necessary to control position to within a quarter of a degree or less, the former, which powers the motor directly, is indicated. Where an error of a few degrees can be tolerated, the relay type is satisfactory and much simpler.

As even a "sharp" rotary antenna seldom has a main lobe narrower than thirty degrees, a relay-type amplifier is the common choice, especially because any conventional rotator may be controlled with it.

A Practical Servo-system

Figure 3 and the photographs illustrate the beam-control system used at W2JKH. All parts, except the autosyns and the aircraft controller, which is used as the rotator, are standard, catalogue items. These parts are *surplus,* but are still available from several sources at reasonable prices.*

Actually, the rotator is not an essential part of the servo-system. Any standard rotator could be used, but this one is both economical and compact. Although a midget compared to a "prop-pitch" motor, it turns my three-element, 14-Mc. beam with its nineteen-foot boom without difficulty.

Other Syncros may be substituted for those specified, but may require some modification of the amplifier input circuit.

The Amplifier

I have waited until the actual diagram was introduced to discuss the amplifier. Only the operation of the 2D21 thyratrons can be considered in the least mysterious. Their grids are connected in parallel and biased to plate-current cut off. The a-c error signal is fed to them through *T1.* A-c plate voltage is fed to the 2D21's in push-pull through the relay windings.

An error signal at the grids of sufficient amplitude and in phase with the plate voltage on one of the thyratrons will ionize the gas in it. This immediately reduces its plate resistance to a very-low value, and a large plate current flows, causing the relay to close and apply power to the rotator.

Once a thyratron "fires" its grid loses all control of the plate current as long as the plate voltage is positive and sufficient (10-15 volts) to maintain ionization in the tube, because the ionic bombardment of the grid neutralizes the effect of any external grid excitation. In this application, however, the a-c plate voltage auto-

* The reversible series motor, **AYLC 1591 Aircraft Controller** is readily available from surplus houses at this writing. The Synchros could be 26-volt, 400-cycle, **Eclipse-Pioneer** autosyns which are also commonly **available. Editor.**

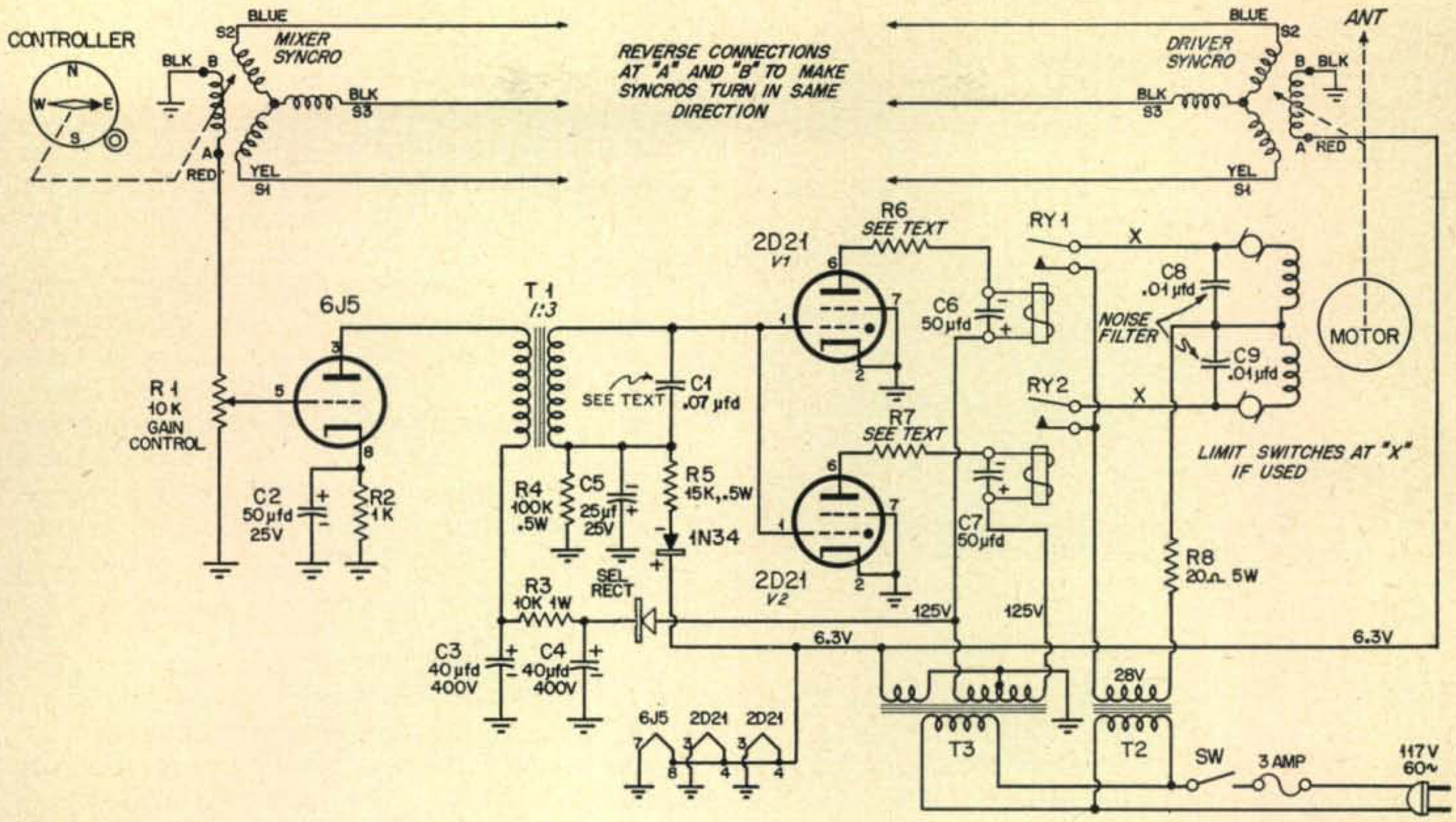

matically de-ionizes the tube on each negative half cycle. It will re-ionize on the positive half cycles, only if the excitation voltage is still present on the grid.

At first glance, it would seem that both thyratrons will fire when an error signal appears on the grids, because they are connected in parallel. But remember that the plate voltage is a.c., and the plates are in push-pull. As a result, when one plate is positive, the other one is negative. For a tube to fire the instantaneous voltage on *both* the plate and grid must be positive. While on the next half cycle, the other plate goes positive, the grid signal is then negative. Result: the tube cannot fire.

Whether *V1* or *V2* fires depends upon which way the Syncros are displaced from the null position.

Thyratrons are used as the control tubes, because the error signal triggers the plate current "on" and "off," without varying it over wide limits as would occur with vacuum tubes. This is an obvious advantage in relay operation.

There are two possibilities of the thyratrons mis-firing. One is a phase difference between the instantaneous plate and grid voltages. A shift of ninety degrees, for example, will permit both tubes to fire if the amplitude of the grid voltage is sufficient. Smaller phase errors will have the same tendency to a lesser extent. The Syncros can introduce a phase shift up to thirty degrees, which, fortunately, is easily corrected. This is the function of *C1*.

The second possibilty of the thyratrons misfiring is excess resistance in the grid circuit. The ionic bombardment of the grids mentioned earlier builds up a charge. This charge leaks off during the negative half cycles of plate voltage. But if there is too much resistance in the grid

C1—0.05 to 0.1 µfd., line-phasing compensating condenser.
C2—50 µfd., 25v., electrolytic.
C3, C4—40 µfd., 400v., electrolytic.
C5—25 µfd., 25v. electrolytic.
C6, C7—50 µfd., 150v., electrolytic.
C8, C9—0.01 µfd., disc ceramics.
R1—10,000-ohm potentiometer.
R2—1000 ohms, ½w.
R3—10,000 ohms, 1w.
R4—100,000 ohms, ½w.
R5—15,000 ohms, ½w.
R6, R7—2 watt resistors to match Ryl and Ry2. See text.
R8—20 ohms, 5w.
Ry1, Ry2—Single-pole, normally open relays. 3-amp. contacts. Most plate circuit relays will work at this position with the proper selection of R6 and R7.
Sel. Rect.—Half-wave selenium rectifier.
T1—3:1 ratio audio transformer.
T2—28v., 3-amp. transformer with 117v. primary. Super Electric Products ST-189, or equivalent.
T3—6.3v, 1-amp. transformer with 250v. c.t. secondary at 25 ma. Stancor PS-8416, or equvalent.
1N34—crystal diode.

Fig. 3. Wiring schematic and parts list for the servo amplifier.

circuit, all the charge will not leak off before the next positive half cycle of plate voltage arrives, and the tubes will ionize in the absence of an error signal. With the values shown, however, no trouble from this effect should be experienced.

Construction and Adjustment

All components in *Fig. 3* are located at the base of the antenna, with the exception of the *Controller* and the power switch. A seven-conductor control cable connects them to the *Controller* and switch at the operating position.

Almost any arrangement of the parts in the amplifier will be satisfactory. A selenium rectifier and its associated filter supplies d-c plate voltage for the 6J5 from the thyratron plate transformer. A 1N34 and filter biases the 2D21's from the filament winding.

Ry1 and *Ry2* are single-pole, normally-open relays. They must be capable of handling three amperes and sensitive enough to operate on 100

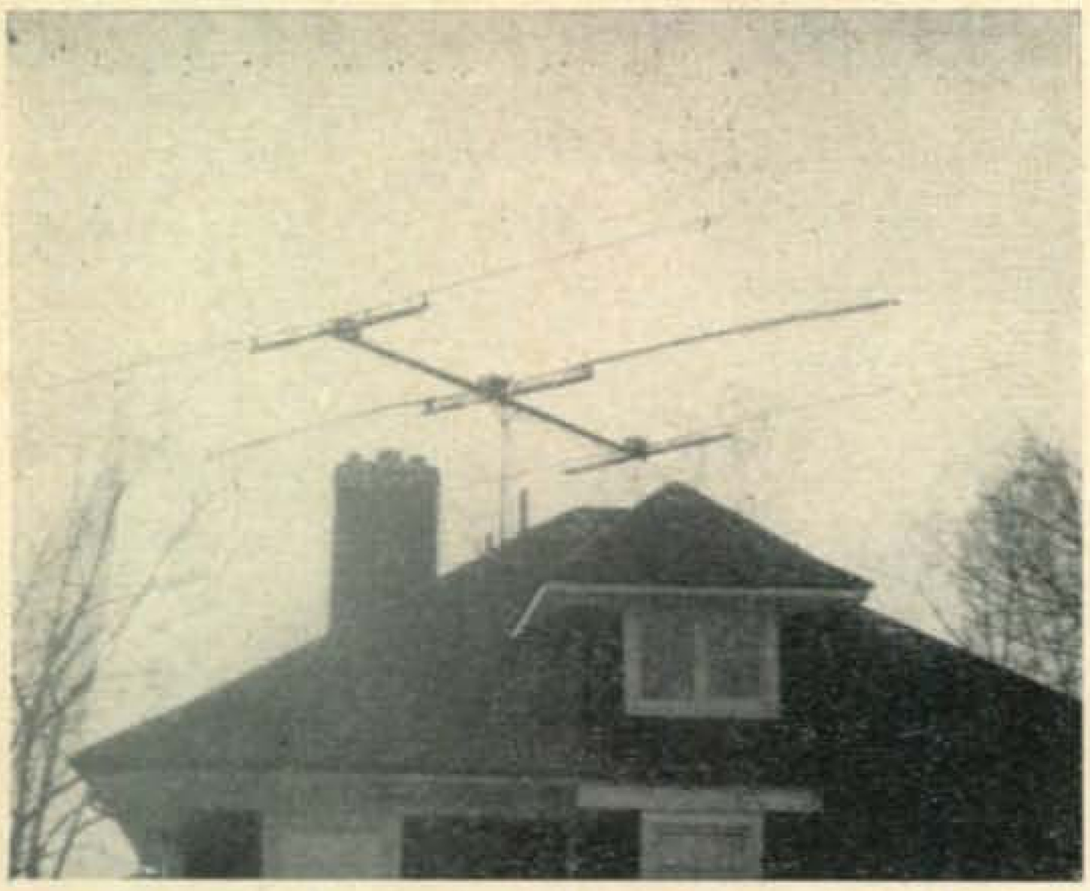

The system described in the text easily rotates this three-element array on a nineteen-foot boom.

milliamperes (the maximum plate current rating of the 2D21's) or less. *R6* and *R7* limit the current to the desired value. 1,000 ohms permits about forty milliamperes to flow. The 50-μfd condensers across the relay coils eliminate contact chatter and the .01-μfd condensers across the motor leads eliminate brush noise.

The 24-volt, 400-cycle Autosyns work excellently on sixty cycles if the voltage is held to six or seven volts. I used a pair of one-to-one ratio gears to couple the driver Syncro to the beam drive shaft.

After the amplifier is wired, the next step is to adjust *C1* to compensate for phase shifts introduced into the system. The easiest way is with the aid of an oscilloscope. Connect the vertical amplifier to the 2D21 grids and the horizontal amplifier to one of the plates. The resulting trace on the cathode-ray tube will be a diagonal straight line when *C1* is correct. It will slant to the right or the left depending upon which plate is chosen, and which direction the *controller* Syncro is displaced to generate the error signal.

Incidentally, the scale and case for the controller may be a revamped *surplus* position indicator, or it may be constructed with a pointer on the Syncro rotor and a dial scale. Put enough friction on the pointer to hold it in position once it is set.

After *C1* is adjusted, the amplifier gain must be set to match the output of the *Mixer* Syncro and the amount of coasting in the beam when power is removed from the motor. This is necessary for this reason: suppose the beam coasts five degrees. Also suppose that the amplifier gain is high enough; so that a position error of a degree or two is sufficient to fire the thyratrons. As the antenna rotates, the error signal is reduced to zero when the antenna approaches the desired position and the relay opens, removing power from the motor. However, the antenna will coast beyond this point, producing an error signal of the opposite polarity. The other thyratron fires and closes the other relay, applying reverse current to the motor. The antenna comes to a shuddering stop and starts back in the opposite direction—*if nothing breaks*. This cycle may be repeated indefinitely as the system "hunts" for the null. Do not underestimate the strain it places on the motor, gears, and antenna, even at a speed as low as one r.p.m.

To check the system for "hunting," put a piece of paper between one set of relay contacts, and turn the *controller* to close the other relay. Carefully watch, as the antenna zeros in, to see if there is enough play or coasting to permit the second relay to close after the first one opens. The paper between its contacts will prevent possible damage during the test.

Amplifier gain can always be reduced sufficiently to eliminate "hunting," but it is desirable to keep it reasonably high to permit more accurate antenna positioning. If all coasting and "play" were eliminated, accuracies of about one degree would be possible.

With a full twenty-eight volts on the drive motor, the AYLC 1591 rotated my antenna at two r.p.m., which resulted in quite a bit of coasting. Adding *R8* reduced the speed to about one r.p.m. and coasting to about five degrees. By proper adjustment of *R1*, the relays open as the antenna approaches the desired position, and it coasts right on the nose.

There are at least three ways to make the position shown on the *controller* agree with the actual position of the antenna. One is to allow the antenna to assume a position, loosen the clamp holding the *controller* case, turn the case, and allow the beam to null again, repeating until the *controller* and antenna position agree. The second is to loosen the *controller* setscrew and turn the pointer or dial to position, while holding the rotor. Then retighten the setscrew. A third is to disengage the *driver* gear from the one on the antenna drive shaft, pull out the 2D21's, and manually close one of the relays until the antenna position corresponds with that on the *controller*. Re-engage the gears and replace the tubes.

A Word of Caution

A servo-controlled rotator will always turn the antenna in the direction requiring the least angular motion to produce a null in the error system. For example, if the antenna is pointing north, and you desire it to point east, it will turn clockwise ninety degrees to reach the new position, whether the *controller* is turned ninety degrees in the clockwise direction or 270 regrees in the counter-clockwise direction. In an antenna installation with unlimited rotation, this entails no special problems. However, where feeders limit rotation, it could result in trouble.

A stop on the *controller* to limit its rotation to 360 degrees will eliminate almost all danger of twisting up the feeders. Not quite all, however. As explained above, if the *controller* is

(Continued on page 58)

NEW MOTOROLA
Home Unit Monitor Receiver

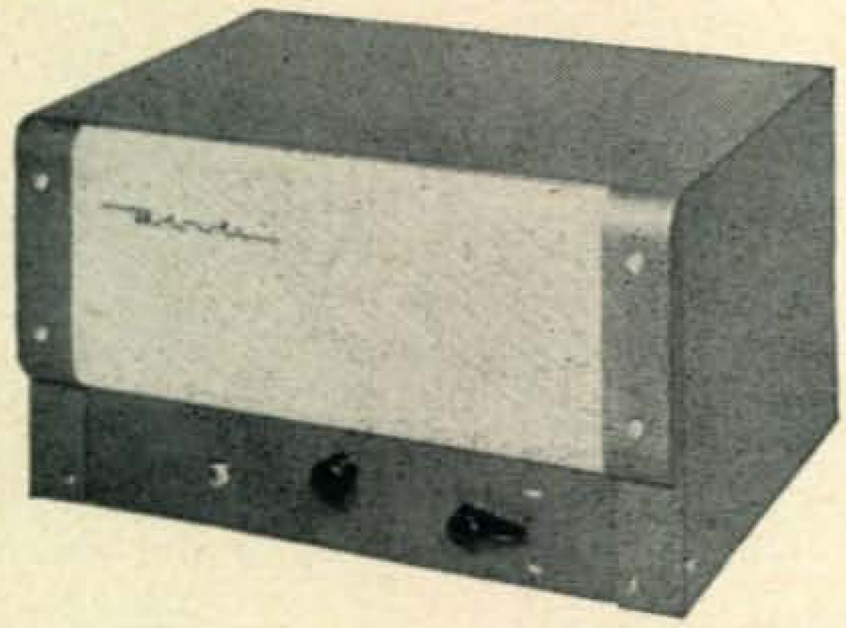

Now available—the new Motorola Monitor or Alert Receiver, for operation in the 25-50 mc. and 152-174 mc. ranges. Optional selective signaling, emergency 6 VDC power supply, and red-yellow-blue-white light alert cabinet attachments. Ideal for amateur, as well as public safety, civilian defense, industrial and commercial radio systems.

For further information write to:

Motorola®

Communications & Electronics, Inc.
Amateur Sales Dept. - CQ - 11
1327 W. Washington Blvd., Chicago 7, Illinois
Attention: **Harry Harrison, W9LLX, Tel. TAylor 9-2200—Ext. 161**

LIMITED QUANTITY
NOW AVAILABLE



NEW PANADAPTOR PCA-2

This invaluable visual signal observer is rapidly becoming impossible to get. Order yours TODAY while we have a limited supply to fill immediate requests.

NEO-TECH PRODUCTS, INC.
14 SOUTH SECOND AVE., MOUNT VERNON, N.Y.

For complete information WRITE now for a descriptive folder.

(from page 57)

superb DX worked with the equipment described. Well, why should a VHF man not have this privilege? The first QSO using this BC-625 gismo resulted in breaking the then world's record with W5ONS on 220 Mc.

SERVO MECHANISMS

(from page 16)

swung more than 180 degrees, the antenna will rotate in the opposite direction; therefore a habit of swinging the *controller* more than a half turn could soon result in the feeders being torn off, in spite of the stop.

To prevent the antenna from rotating in the opposite direction, first turn the *controller* slightly less than a half a turn. Allow the antenna to rotate far enough, so that an additional rotation of less than 180 degrees will put the antenna in the desired position; then bring the *controller* to the final position.

A normally closed "limit" switch in each motor lead will give positive protection against tangling the feeders. There are a pair of them in the AYLC 1591 motor that must be removed. They may be remounted externally for this purpose.

Although my antenna can only be rotated about a revolution and a half without damage to the feeders, I never relished the though of having to swing a beam 340 degrees to achieve a net change in position of twenty degrees. Therefore, I use no method to limit rotation. So far, I have never wrapped up the feeders. One reason may be that it is easy to inspect them, if I suspect that they are twisting.

DX ANTENNA

(from page 23)

Mc., because it is somewhat shorter than a quarter-wave, its efficiency is reduced, but it does put out a very good signal both locally and at distances of several hundred miles. At night on 3.9 Mc., we have worked stations over 1,000 miles away with this antenna, in the Western U. S., and the West Indies, from W4RXO.

Now for a word about TVI. This antenna definitely helps that situation. In the first place, it is fed by coaxial line, which is buried underground from the transmitter out to the tuning unit. Use of coaxial line enables us to insert a low-pass filter in the line as it leaves the transmitter. If any harmonics to do get by the filter, they are discriminated against by the antenna

(Continued on page 60)

Automatically Tuned

All-Band Kilowatt

VERNON VOGEL, WØHMS*

Automatic tuning is a much discussed feature that most amateurs would like. Admittedly not something for the newcomer to tackle, WØHMS has gone all the way in this high-power phone and c-w rig. This first part of the two-part article is a discussion of the automatic tuning circuit design. Part 2, to appear next month, will describe the transmitter.

THE TRANSMITTER to be described is the result of the writer's efforts to obtain the ease of operation considered desirable with the new operating techniques used in postwar ham radio. The transmitter, with the exception of the final amplifier, is band switching and covers the 80, 40, 20, 15, and 10-meter bands.

To obtain maximum use of v-f-o flexibility and maintain maximum transmitter efficiency at all times, full automatic tuning of the transmitter was considered a necessity. Since ganging the final amplifier to the v.f.o. was rather impractical, automatic tuning was applied to the final; and to reduce the size of the v-f-o unit, since it was to be on the operating table, all exciter tuning was put in the transmitter with separate automatic tuning applied to it.

In general, most antenna circuits can be modified to permit transmitter tuning over at least half of any ham band, with little variation in final amplifier loading, without changing antenna tuning, and this will be described in more detail later. If the amateur link couples into the usual low-impedance non-resonant transmission line, where there are no further antenna tuning circuits that must be resonated, the antenna tuning and loading is no problem. In actual

**Engineering Research Associates, Inc., 1902 W. Minnehaha Ave., St. Paul 4, Minn.*

The complete transmitter except for the frequency control unit is contained in this single rack. The only manual tuning controls are the final loading link and gain control. Filament, tune-up and high-voltage controls with their associated warning lights are on the front panel. Band switch, meter switch, and an auxiliary phone-c.w switch are the remaining controls. The four decks, from top to bottom, comprise the amplifier, driver stages, medium voltage supplies and modulator, and high-voltage supply. Automatic tuning circuits are located with their respective stages.

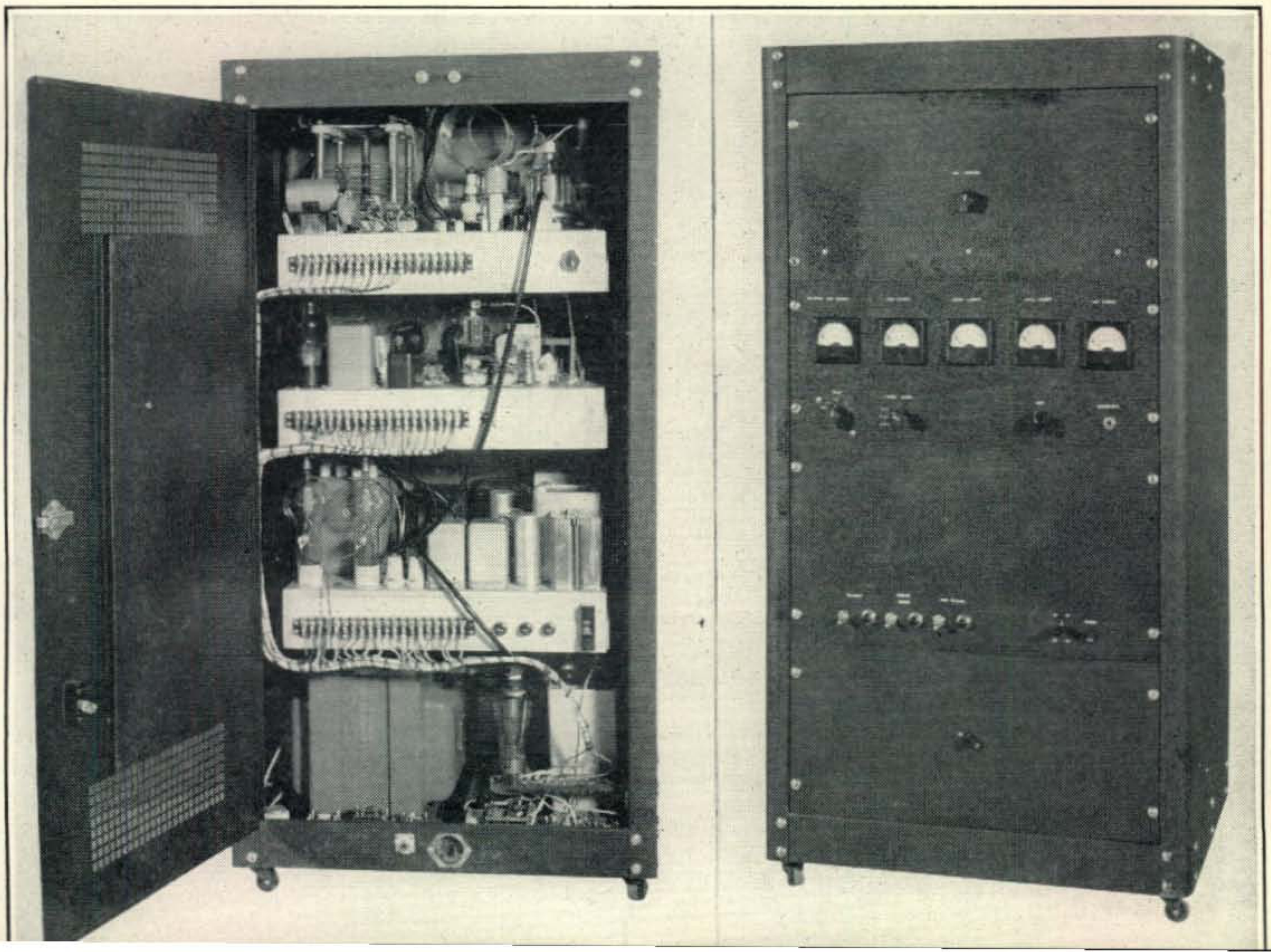

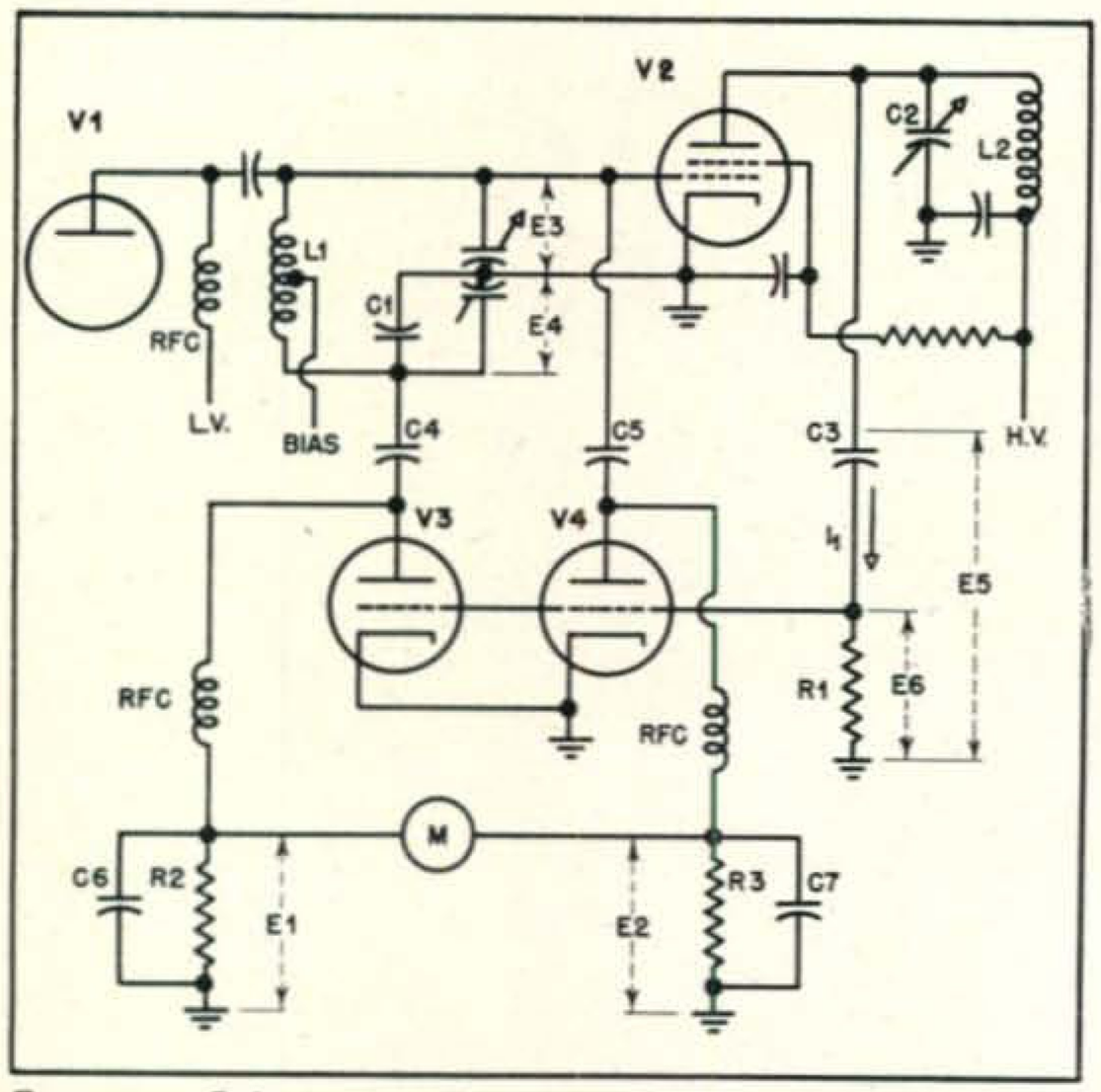

Fig. 1. Schematic showing the basic components of the phase discriminator.

operation this means that the operator merely selects the frequency desired, as indicated by the v.f.o., presses the key or push-to-talk switch and starts normal transmission, unless a large frequency shift is made, such as going from one end of the 80-meter band to the other, which band must then be covered in two steps.

Special consideration was given the control circuits for fast and easy operation with due safety precautions taken with regard to the life of the operator as well as the life of the equipment. All operating controls for phone or c.w. are on the v-f-o panel. Small details such as a switch to cut in and out v-f-o pickup in the receiver for spotting purposes and receiver disabling circuits relay operated by key or mike control, aid in operating ease. Phone operation employs speech clipping, which is considered a valuable asset if for no other reason than preventing over-modulation—and it does help cut through QRM. Compact construction, a kilowatt input on c.w. and 600 watts on phone, was achieved through careful layout considerations.

Utilizing the Phase Detector for Automatic Tuning

The operation of the automatic tuning feature of the transmitter utilizes a phase sensitive detector, which requires that the input and output r-f voltages across the grid-to-ground and plate-to-ground, respectively, of a Class C amplifier be 180° out of phase before a balanced condition is established in the phase detector. This condition corresponds to resonance in the plate tank circuit. The phase detector, besides having the ability to tell if the 180° phase inversion exists, has the ability to tell if the phase angle is leading or lagging. This information given to a polarized relay and a tuning motor will make the tuning motor always tune toward resonance, and stop when resonant condition is reached.

Two types of phase detector are used on this transmitter. One phase detector operates on a single ended buffer stage in the 80-meter band. The remaining multiplier and buffer circuits are ganged to the automatically tuned stage, and tracked over the amateur bands. The second phase detector is especially adaptable to push-pull circuits and operates on the final amplifier, which isn't readily ganged to the earlier stages since it is desired to make it operate at peak efficiency on all frequencies. Because it is somewhat simpler, the final amplifier phase discriminator will be described first.

Figure 1 is a schematic showing the basic components of the discriminator, and it has the necessary r-f and d-c voltages indicated as an aid to understanding the circuit. *Figs. 2* and *3* are vector diagrams of the r-f voltages indicated on *Fig. 1*. *Figure 6* is a typical curve of the d-c output voltages as read on meter *M*, and is the difference between d-c voltages *E1* and *E2*. This voltage is plotted against variation of plate tank tuning condenser. Voltages *E3* and *E4* are equal and 180° apart with respect to ground regardless of the tuning of the grid input circuit *L1-C1*. These voltages, it is seen, are obtained by the conventional split-stator condenser and center-tap coil methods such as used to feed a push-pull output circuit. Since the tuning circuit works equally well on a single-ended, as well as a push-pull, circuit, a single-ended circuit has been shown, which merely requires the addition of capacity *C1* to obtain equal voltages *E3* and *E4*.

The two voltages *E3* and *E4* are fed through blocking condensers *C4* and *C5* to the plates of the

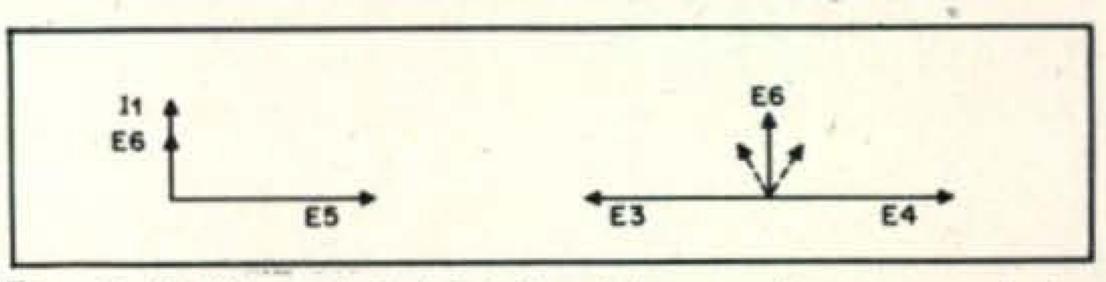

Fig. 2 (left) and 3 (right). Vector diagrams of the r-f voltages indicated on Fig. 1.

discriminator tubes *V3* and *V4*. If we consider the grids of *V3* and *V4* removed for the moment, it is seen that in each tube circuit there exists a conventional diode rectifier circuit with load resistors *R2* and *R3* with the conventional r-f chokes in each lead and the r-f bypass condensers *C6* and *C7*. Further, if a meter *M* is connected across the top

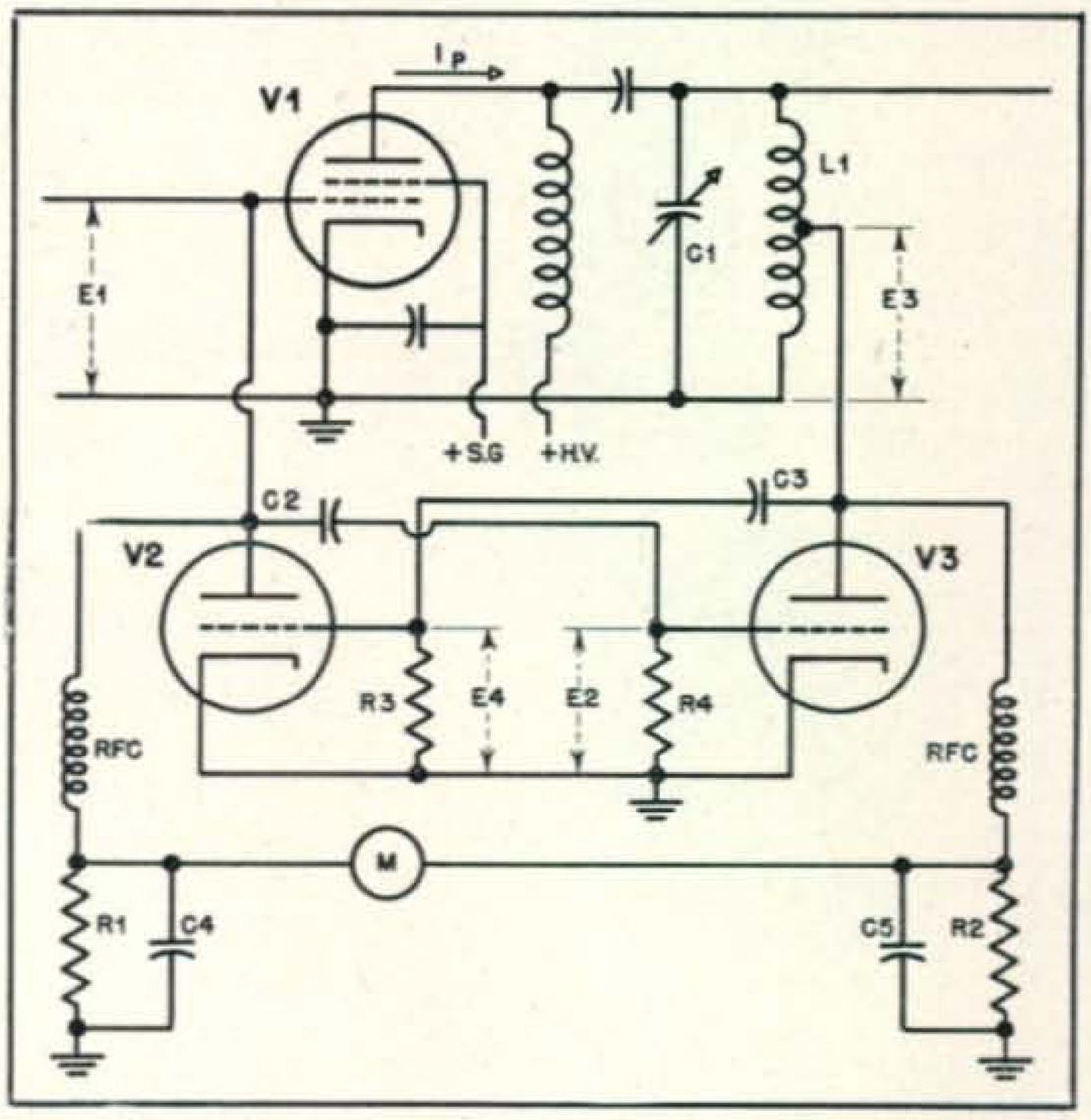

Fig. 4 Discriminator circuit used to tune the buffer stages.

ends of the two resistors, the voltage across the meter will be zero since the voltage across *R2* and *R3* are equal if *R2* and *R3* are made equal.

Next consider the grids on *V3* and *V4* and consider the output of tube *V2*. Connected across the plate of *V2* to ground is a small capacity *C3* in series with a small-resistor *R1*. Since *C3* has a high reactance compared to the resistance of *R1*, the voltage *E6* developed across *R1* will be approximately 90° out of phase with the voltage *E5* at all times. This is illustrated by vector diagram *Fig. 2*. Since the current is determined mainly by condenser *C3*, and the current in a condenser always leads by an angle of 90° and, further, since the voltage across the resistance is in phase with the current, the 90° phase situation is obtained. This quadrature voltage is applied to the grids of both *V3* and *V4* and the resultant vector diagram for the voltages *V3* and *V4* is shown in *Fig. 3*.

The a-c component of plate current in a vacuum tube is always 180° out of phase with the grid input voltage except at v.h.f. where transit time is appreciable. Therefore, when the output circuit looks like a pure resistance, which condition is produced when the output tank circuit is at resonance, it is seen from *Fig. 3* that *E6* is 90° out of phase with *E3* and *E4*. Since the grid voltage has a 90° phase relation with both the plate voltages *E3* and *E4*, the effect of *E6* on the rectifier action of the discriminator tubes is equal and any change in

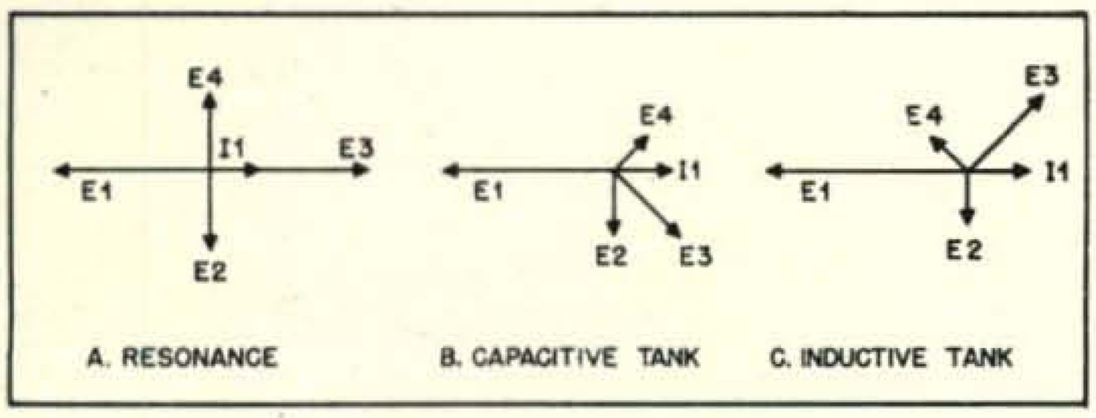

Fig. 5. The respective vector diagrams of the r-f voltages indicated on Fig. 4.

voltage across resistor *E1* and *E2* due to the insertion of the grids will be equal; therefore, the meter *M* will still read zero, indicating resonance. However, if the output circuit *C2-L2* is tuned either above or below resonance, the voltage *E5* is no longer 180° out of phase with *E3* and *E4* but has some other value. Therefore, *E6* is not in phase with the a-c plate current *E1* and the voltage *E6* then assumes some angle that is more than 90° with respect to, say, *E4* and less than 90° with respect to *E3* or vice versa as indicated by the broken line vectors.

In the first case where the angle of *E6* is less than 90° with respect to *E4*, tube *V3* will conduct more than tube *V4* and thereby produce more voltage across *R2* than *R3*, producing a voltage across meter *M*. This voltage, of course, can be used to operate a polarized relay controlling a tuning motor operating on the output tank circuit. It should be noted that the tuning of *L1-C1* has no effect on the phase relations in the output of *V2*, nor does it in any way affect the operation of the phase discriminator aside from varying the sensitivity with variation in voltage applied to the discriminator plates.

The second discriminator described, which is



The control unit. The operator selects the desired frequency on the v.f.o. or crystal and presses the key or push-to-talk switch. A switch for spotting the v.f.o., crystal or v-f-o selector, and phone-c.w. switch are the other major controls.

used to tune the buffer stages, is sensitive to r-f voltage variations, but has the advantage of operating from the usual single-ended circuit, thereby saving a tuning condenser. This circuit is illustrated in *Fig. 4* with the respective vector diagrams shown in *Fig. 5*. The discriminator output curve is similar to the first discriminator except that it has a second crossover as indicated by the dotted curve. Voltages *E1* and *E3* are chosen so that they are equal when the output circuit *C1-L1* is tuned to resonance. This requires a tap on the coil *L1*, which can best be determined by experiment. Condensers *C2* and *C3* are again of small capacity, thereby having a large reactance compared to resistors *R3* and *R4*. These condensers, *C2* and *C3*, are made equal, as are resistors *R3* and *R4*. The voltage *E4* developed across resistor *R3* is 90° out of phase with the voltage *E3* at all times, and the voltage *E2* developed across resistor *R4* is 90° out of phase with the voltage *E1* at all times. At resonance *E1* and *E3* are 180° out of phase so that the four voltages concerned are all 90° out of phase with each other as shown in *Fig. 5A*. (*Continued on page 92*)

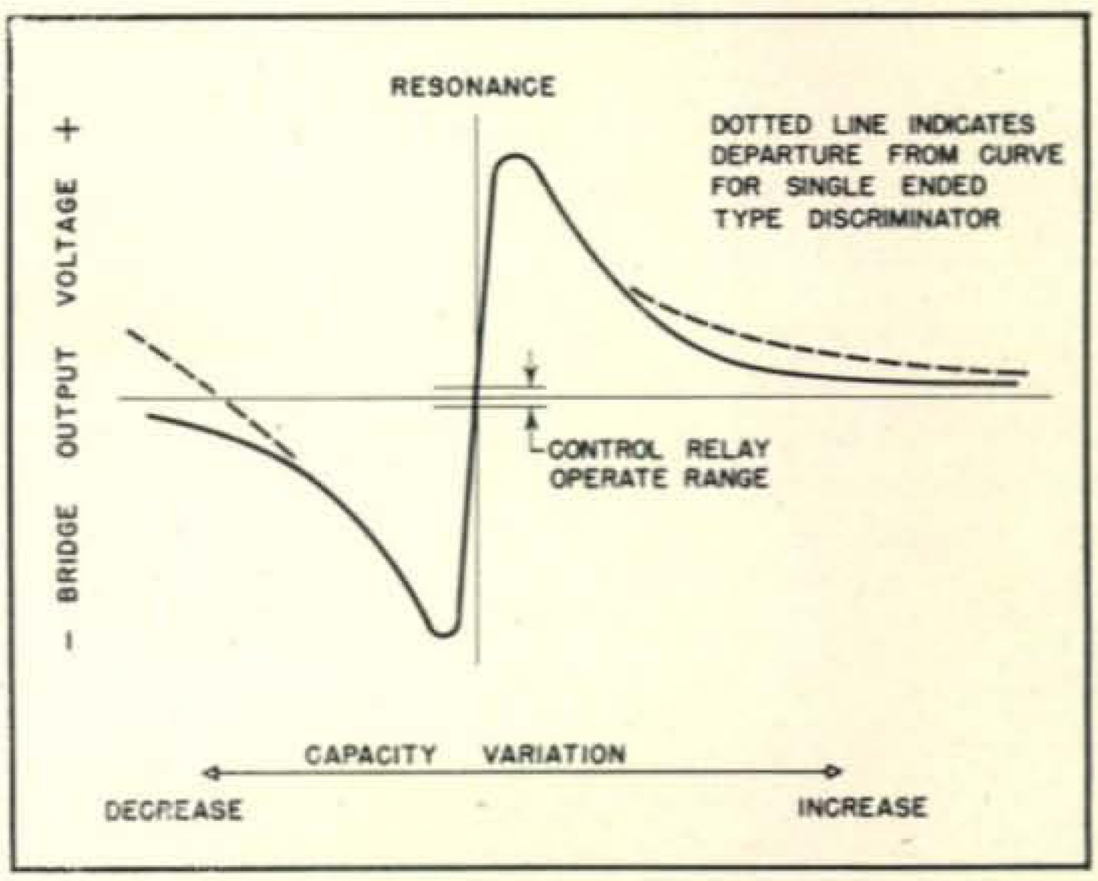

Fig. 6. Typical curve of the d-c output voltages as read on meter M in Figs. 1 and 4.

HAM RECEIVER - $12.95

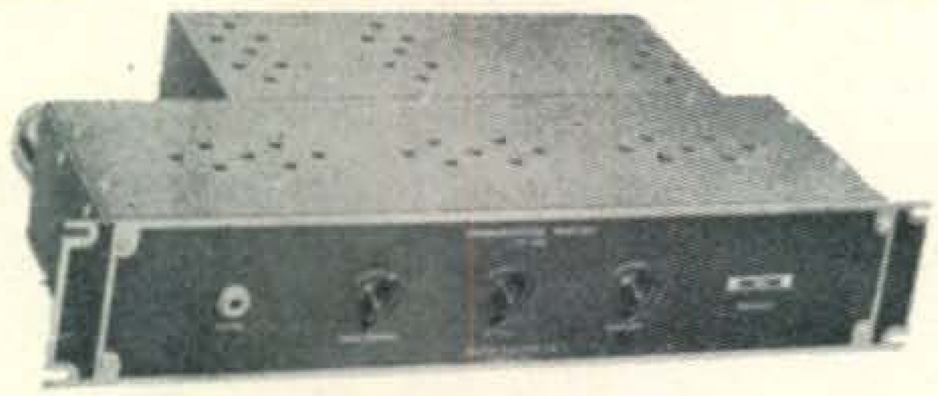

Wilcox CW-3 receiver can be converted into a fine ham receiver. It's 110 volts A.C. and has a built-in power supply. Uses 6K7 RF amplifier; 6 K 8 Output and noise suppressor; 80 rectifier. Comes complete, brand new, with one set of coils and two sets of tubes. Your cost at Almo, $12.95.

10% CASH WITH ORDERS

ALMO *Covers the Globe*

509 Arch Street, Phila. 6, Pa.

PHONE LOmbard 3-9225

RADIO

Technician and Radio Service Courses
FM and TELEVISION
American Radio Institute
101 West 63rd St., New York 23, N. Y.
Approved Under GI Bill of Rights
Licensed by New York State

NC HAM RECEIVERS

NC-101X: with S meter. 11 tube sup het xtal filter 10-20-40-80-160 meter bands. 1RF 2 IFs AVC CW oscill noise limiter incorporated in tone control; PW dial 20 to 1 ratio band spread over entire dial min. undistorted output 10 watts built-in power sup., automatic coil changing. **Orig. value $243.00.** Only a few available in excellent like new condition. Complete w/all tubes, xtal, L/speaker **$67.50**
SPECIAL: 100 assor. condensers .1, .05 .10, .25, etc. **$3.00**
McCONNELL 3834 Germantown Ave., Phila., Pa. RA 5-6033

L. I. SPECIALS

Plug, fits BC348 Receiver, new	.25
SCR522 Mike Adapter M299, new	1.35
Plug for above (sold only with adapter)	.39
MC211A Right Angle Drive for SCR274N, new	.75
AN/APN1 Radio Altimeter plugs, new ea.	.55

Please include postage.
LONG ISLAND RADIO COMPANY
164-21 Northern Boulevard., Flushing, New York

Control Cable for Rotary Beams

• 100 Foot Lengths • 24 Conductor
•Female Coupler at Each End • ½ Inch Outside Diameter
• Waterproof, Flexible **$6.95**

Lyell Sales & Merchandising Corp.
P.O. Box 5, Rochester 11, N. Y.

ELECTRIC SOLDERING IRON $1.00

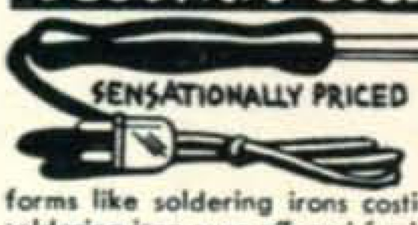

Not a toy—the real McCoy. Mighty Mite Electric Soldering Iron with new, amazing "Demon-Heet" element performs like soldering irons costing many times more. Handiest electric soldering iron ever offered for hobbyists, home workmen, mechanics. 35 watts 110-120 volts. GUARANTEED. No COD orders. Price $1.00 includes mailing. Dealers write for quantity prices. **OHIO FACTORY SALES, 10314 Superior Ave., Dept. CQ, Cleveland, Ohio.**

strength. If this condenser is not "on-scale" the antenna feeders should be lengthened by a quarter-wavelength and then cut a few inches at a time until this condenser comes on scale. The same holds true for the 100-$\mu\mu$f condenser in the mixer plate circuit. The line between the converter and the receiver should be good quality coaxial cable, and should also be as short as possible, unless it is necessary to lengthen it as described.

The oscillator works on a frequency approximately 10 mc higher than the signal frequency for the 6 and 10-meter bands, and on a lower frequency for the 2-meter band. In other words, the oscillator runs at approximately 38 to 40 mc for the 10-meter band, 60 to 64 mc for the 6-meter band, and 134 to 138 mc for the 2-meter band.

Final Notes

After the original model of the converter was completed, the frequency changed slightly when the same plug-in coil was plugged in and out. This was found to be due to an imperfect ground connection. This difficulty was overcome by means of a phosphor-bronze ground clip which contacts the front of the plug-in coil. This clip may be seen in the top view photograph of the converter.

Another point regards the condenser C_3. If this capacitance is too large, several effects may be found. One is that the noise level may be too high in the receiver. Too high a value of C_3 will also cause "pulling," or a change in oscillator frequency due to tuning of L_2. Audio distortion may also be noticed. All of these effects may be eliminated by reducing the value of C_3. When C_3 is too small no signal will be heard, so that the proper value is one which just causes the signal to be heard in the receiver.

High receiver noise may also be due to the oscillator super-regenerating. This may be stopped by putting a lower value of grid resistance in the oscillator stage. The 10,000-ohm resistor specified should be a satisfactory value.

The 2-meter coil is different from the other coils in two respects. Coil L_3 is air wound. One turn of No. 14 wire is soldered directly to the socket pins, and a 4-30 $\mu\mu$f trimmer, C_2, is wired in so that it is adjustable through the opening in the top of the coil box. Also, no connection is made for C_3, as this capacitance is not required, because the tube itself furnishes enough feed-back capacitance.

Performance tests, made with laboratory equipment, showed that a 20-microvolt signal into the converter gave 50 microvolts out on 10 meters, 50 microvolts out on 6 meters, and 20 microvolts out on 2 meters. This gain is substantially constant across each band.

ALL-BAND KILOWATT

(*from page 21*)

Since *E3* equals *E1*, and *E2* then equals *E4*, and the 90° phase relations exist, the conduction in tubes *V2* and *V3* are equal, thereby developing equal voltages across resistors *R1* and *R2* and zero voltage across meter *M*. However, if the tank circuit *C1-L1* is detuned from resonance, voltage *E3* is no longer in phase with *I1;* but in the case of a capacitive tank

circuit where more C than required is used, the voltage $E3$ lags $I1$ as illustrated in *Fig. 5B*. However, $E4$ always maintains the 90° phase relation with $E3$, therefore both $E3$ and $E4$ assume different phase relations with respect to $E2$ and $E1$.

Since grid voltage $E2$ is now less than 90° out of phase with voltage $E3$, but grid voltage $E4$ is more than 90° out of phase with voltage $E1$, tube $V3$ will conduct more than $V2$ with a resultant voltage of given polarity across M. When the tank circuit is tuned off resonance with a value of capacity less than required, the phase relations of *Fig. 5C* are obtained, and $V2$ then conducts more than $V3$ with a resultant reversal in polarity of voltage across meter M.

The operation of the single ended discriminator farther removed from resonance is different from the double ended in that it is not symmetrical about resonance. This is due to decrease in magnitude of $E3$ and $E4$ as departure from resonance gets larger. A more detailed analysis of the discriminator operation shows a discriminator curve departure as indicated by the dotted lines of *Fig. 6*. For best results

$$X_{C2}/R_1 = \frac{X_{C3}}{R_2} = M \text{ of } V2 \text{ and } V3 \text{ of } Fig\ 4.$$

This will move the undesired crossover point as far as possible from the resonance point.

The double ended discriminator will normally operate over a 1-to-1.5 frequency range. This is more than sufficient to cover all amateur bands. For instance, referring to *Fig. 1*, after voltages $E3$ and $E4$ are obtained at a frequency of 2 mc, but with the output circuit $C2$-$L2$ previously tuned to 3 mc, sufficient output would still be obtained from the discriminator tubes $V3$ and $V4$ to actuate a sensitive polarized relay in place of meter M.

The single ended discriminator will normally operate over a 1-to-1.5 frequency range in one direction but due to the crossover it only operates over a 1-to-1.1 frequency range in the other direction. This low discriminator frequency ratio plus the fact that in the transmitter described, $E1$ is obtained from a tuned gang circuit and is thus of such low value off resonance that the frequency ratio is further limited. This requires that the 80-meter band must be covered in two steps. In other words, to tune 80, assuming that one is on the low-frequency end of the band, it is necessary to place the v.f.o. approximately in the center of the band, press the key, and obtain resonant conditions; then to go to the high-frequency end of the phone band, the key is pressed again and resonance is secured at the end of the phone band. Tuning on all other bands is accomplished in one step, which means that no attention need be given to the automatic tuning system when jumping from one end of the band to the other. The tuned input circuit on the tube across which the discriminator works was used in order to have two tuned circuits on 80 meters, thereby reducing chances of spurious response, which was thought desirable, considering the kw input.

The speed at which automatic tuning operates is a problem to consider since if extremely high-speed operation is desired, hunting of the tuning motor becomes a problem and requires an anti-hunt system. Using tuning condensers of about 10 to 45 $\mu\mu f$

"TAB"

That's A Buy

GENERAL RADIO 566A WAVEMTR DIRECT READING 0.5 to 150 mcs 600 to 2 MTRS Hi Accy DIAL CALIBRATION 5 COILS (LP$60) NEW $29.95
IF TRANSF TELEVISION OR FM Dbl slugtuned Hi Freq 11 to 13 mcs HiQ NAVY ..... Two for .98
WILLARD STORAGE 2V BATTERY NEW NONSPIL
BB54/ER27/30AH $1.79 @ .....2 for 3.30
BB206U/2V/26AH $1.25 @.....2 for 2.25
QUART 1250 BAT ACID 95c @; GAL 95 ozs..... 2.95
CRYSTAL DIODES 1N34 @ $1.39; 5 for $5.75....10 for 9.80
CRYSTAL DIODES 1N21, 23, 26 @ $1.....3 for 2.00
WRITE "TAB" S.C. TECH MANUALS & DIAGRAMS
TM for BC221 & 211 $1, BC312 MAINTENANCE..... 1.00
DIAGRAMS & CONVERSION DATA ARC5, SCR522; SCR274, BC348, BC191, BC375, BC624 & 625 each 49c; ALL DATA..... 1.75
WILCOX F3 CONVERSION to TUNED RCVR..... 1.75
COILS FOR BC191/TU5 7, 8, 9, 10.....ea 2.70
COILS FOR BC223, TU22, 26 etc..... 2.70
COILS FOR BC610/HT4 T49 to 53.....ea 2.70
COILS CW & F3 WILCOX 5 to 10 & 9 to 16 mcs set..ea 2.70
COILS FOR HANDIE TALKIE BC 611 & 2 XTALS..... 1.95
XTAL & ECO 3.2 to 4 mcs/TU49..... 1.95
WILCOX RCVR NEW Tubes & Coil set & data..... 14.50
FOXBORO GRAPHIC STRIP RECORDER NEW..... 39.95
TESTED GTD X'CPT Breakage, Shorts & opens. 954, 955, 956, 958 & Socket @..... .69c

3B24	.74	3AP1	2.95	5CP1	2.25
304TL	3.75	3GP1	2.90	7BP7	2.90
2AP1A	2.95	5BP4	3.37	211	.59
3FP7	1.90	5HP1	4.50	2AP1	1.95
5BP1	3.37	6AK5	.60	3BP1A	2.90
5FP7	4.50	C6J	4.45	5AP1	3.55
808	1.75	3BP1	1.95	5CP1A	3.50
WL531	25.00	3JP1	3.00	9JP1	1.95

XTALS POWER OSCS "AT" TESTED BLANKS

6000	7050	7400	7650	8100	8322
6522	7100	7410	8000	8104	8325
6547	7110	7420	8010	8124	8374
6925	7150	7430	8014	8300	8438
7000	7210	7450	8025	8340	8477
7010	7300	7540	8030	8318	8488

8524 KC Each 35c, Four $1, Ten for $2

AUDIO AMPLIFIER—
C' Dec '47 CQ ART-13 speech amplifier and data convrt to peak clipper and low pass filter; includes amplifier, tubes and parts.....$8.25



VIBROPLEX KEY NEW OVSEAS PCKED 5.75
MICROSWITCH, SPDT 35c @.....TEN for 3.00
MICROSWITCH LEAF or ROLLER.....Two for 1.39
NATIONAL XS-2 Feedthru Insltr.....2 pr .25
SIMPLEX RUBBER CO-AXIAL SPLICE.....10 for 1.00
OSCILLOSCOPE BASIC KIT 3" & TUBES POWER SUPPLY CNDSRS, RECTFRS.....15.95
GE SAFETY SWITCH 69c @.....2 for 1.00
SYNCHRONOUS CLOCK MOTOR 1RPM/115V..... 2.95
SYNCH CLOCK MOTOR 10V/60c/24RPM..... .69
SOCKETS, ACORN 20c, 829/39c, 813/..... .49
803/.98, 304TL/90c, 211/49c, 807/..... .20
DIHEPTAL/69c, MAGINAL/49c, SAFETY UX..... .27
PRECISION ONE MEG WW RESISTORS.....2 for 1.69
TIME DELAY RELAY 115V/10AMP/ACDC..... 1.49
AUDIO BANDPASS FILTERS 60 or 90 or 150 cycle....each 1.95
KIT SILVER & MICA CONDSRS.....50 for 2.00
KIT RESISTORS ½ & 1 Watt/50 to 2 MEG.....100 for 2.50
KIT POWER RHEOSTATS 25 & 50 WATT ASSTD.6 for 3.49
KIT CERAMICON CONDSRS ASSTD.....15 for 1.00
KIT MICRO SWITCHES ASSTD.....4 for 1.00

$2 Min. order FOB N.Y.C. Add Postage all orders & 25% deposit. WHitehall 3-3557. Send for catalog. Money back "TAB" Guarantee.

"TAB," Dept. 1Q, 6 Church Street, New York 6, N.Y., U.S.A.
Corner of Church & Liberty Sts., Room 200

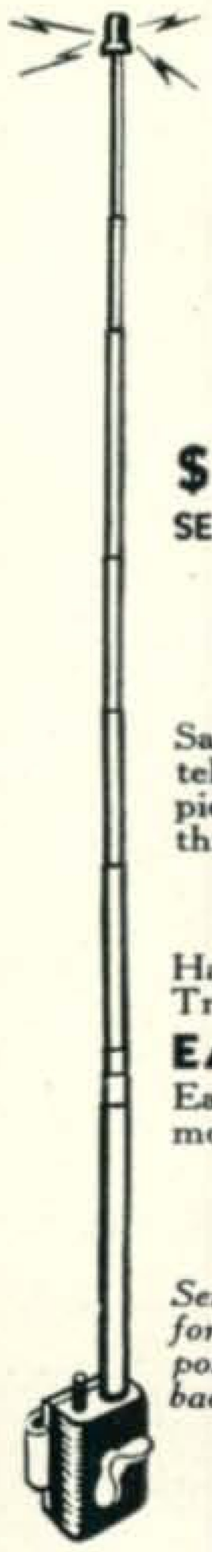

JUST OUT! Hard to get SOLID BRASS PORTABLE

NEW 7 FT. RADIO ANTENNAS

7 Exceptionally Rugged Sections With Handy Mounting Bracket

$10 Value Only $2.49 post paid

SENT POSTPAID UPON RECEIPT OF PRICE OR MAILED C.O.D. PLUS POSTAGE

FOR HOMES BOATS or AUTOS

Same as used on Army tanks, Jeeps, etc. These telescopic, rustproof antennas have tremendous pickup, eliminate dangerous wiring. Solid Brass throughout, practically insuring

NOISE FREE RECEPTION

Compresses into 1 ft. 3 in.

Handy for Camping Trips, also Useful for Transmitting, FM and Television sets.

EASY TO INSTALL ANYWHERE

Each antenna comes securely packed with mounting bracket, ready to install.

QUANTITY LIMITED

MAIL ORDER TODAY

Send check or money order today for only $2.49 for this $10 Value. Your antenna will be sent postpaid or mailed C.O.D. plus postage. Money back in 10 days if not satisfied.

RADIO HOSPITAL

442 East 86th St., Dept. CQ
New York 28, N. Y.

BARGAINS

BC 620 FM TRANSCEIVER 20 to 27.9 mc famous "horsie talkie" with tubes	14.95
ARC 5 TRANSMITTER 5.3 to 7 mc, with tubes & Crystal	3.95
ARC 5 Control Panel with tuning crank and Volume control	.95
SENSITIVE RELAYS	
CLARE SPDT 3500 ohms, 6 ma, No. R30	.79
SIGMA SPDT, Type 4AH 2000 ohms, 4 ma close 1.5 hold, 5 prong No. R28	.95
Ward Leonrd SPDT. 25,000 ohms. 110 v 50-60 c ac 5a contacts No. R56	1.25
CHOKES & TRANSFORMERS	
SWNGNG, 7-25hy 300 ma 150 ohms, Chi Trans. upright full shld, 3¼ x 3¼ x 4½ h No. T42	2.95
Dual FLTR, 20 hy 90 ma 2 x 100 ohms, W.E. Shldd, 1¾ x 3⅛ x 4¾ No. T47	1.19
Linear Stndrd, 30 hy 600 ohms, 110 ma Amertran Shldd 3½ x 4 x 4½ No. T33	1.95

All Prices F.O.B. our plant. Include enough for shipping costs; we will refund any excess.

WRITE FOR ADDITIONAL LISTS OF BARGAINS IN RADIO & ELECTRONIC PARTS. ALSO KITS DESIGNED BY *ROBERT G. HERZOG.*

Universal general corp.

365C Canal St. New York 13. N. Y.

WAlker 5-9642

Wishing You A Happy and Prosperous New Year

RADELCO, INC.

268 West First St., Mt. Vernon, N. Y.—MO Ver 8-6173
Store hours: 10 AM to 7 PM—Tues., Fri., Sat., to 9 PM
Nils/W2LSD Tre/W2BGR
Distributors of Amateur Radio Equipment and Parts

variation, and the usual padding condensers together with stray circuit capacities, the lower frequency amateur band required about 160° condenser rotation out of the usual 180° Driving this condenser with a motor through a gear reduction giving about 10 revolutions per minute was sufficiently slow to eliminate any hunting effects, and still permitted tuning up, when going from one end of the band to the other, in less than three seconds. In normal QSY procedures this time is, of course, negligible and the automatic tuning is completed before many characters are transmitted. The sensitivity of the phase detector, and hence the amount of hunting, is determined by the *Q* of the tank circuit and the final amplifier tank hunts continuously in this transmitter with no load but stops hunting when loaded. Blocked rotor braking of d-c motors reduces stopping time of the motor after power is removed by a factor of from 4-to-1, or better, over merely opening the motor circuit. If shaded pole induction motors are used, blocking action can be obtained by normally shorting both shading windings, but opening the clockwise winding for counterclockwise rotation and vice versa. Such motors are manufactured by Barber-Colman Company of Rockford, Ill., and can be obtained with varied gear reductions.

Generally the degree of accuracy of the tuning is greater than obtained by hand, thus the tubes always operate under optimum conditions. When using link-coupled circuits, such as coupling the final amplifier to the antenna through a link, small amounts of reactance in the antenna can be cancelled out from the tank circuit automatically through reflected reactance and the optimum tuning condition for the final amplifier is still maintained.

ZERO BIAS

(from page 13)

Due to the detail work involved in tabulating scores, entries must submit DX Marathon scores on a separate page from Honor Roll scores and other DX news. It is requested that scores be plainly marked "DX Marathon."

Zone and country lists must be submitted in the same manner as though they were for the Honor Roll; the zones listed in numerical order showing the call letters, date and time; the countries in alphabetical order by country, followed by the call, date, and time. The CQ DX Zones of the world, and the official DX country list, will be used for the yardstick.

Standard reporting forms for both the DX Marathon and the Honor Roll are now in preparation. A self-addressed envelope sent to the editor's attention will secure a set of these forms for you. Please indicate whether or not you want them for just the Honor Roll or both the Honor Roll and DX Marathon. You can mark this on the lower left hand corner of the envelope.

The 1948 Annual DX Marathon is the first operating activity to be sponsored by *CQ*. During the year several others will be announced, all of which will be aimed at giving the participants a lot of fun and at the same time benefiting amateur radio as a whole. A most important activity which will be of special interest to clubs will be outlined in detail in the February editorial. —*W2IOP*

Automatically Tuned
All-Band Kilowatt

VERNON VOGEL, WØHMS*

Part 2, covering the constructional details of this unusual all-band kilowatt.

IN PART I OF THE ARTICLE appearing last month the basic theory of the phase detector circuits for automatic tuning was discussed fully. Part 2 deals with the practical application of this theory in a 1-kw c.w. and 600-watt phone transmitter that is, within very minor limitations, *single dial control.*

The v-f-o unit consists of a Collins 70E-8 permeability tuned oscillator with a frequency range of 1600 to 2000 kc which multiplies into all amateur bands. The HRO dial was adjusted for zero at the low-frequency end of the bands so that kc in the band can be read accurately by means of multipliers for the various bands. The present amateur version of the 70E-8 oscillator is furnished with a dial which reads directly in kilocycle steps to an accuracy of 0.015%, so that accurate frequency control is maintained at all times. The v-f-o, including power supply and buffer tubes, is built in a 7" x 12"x 8" hinged cabinet.

The 70E-8 as shown in *Fig. 7* is fed directly to a 6AK5 isolating buffer which in turn couples to a 6C4 tube with a 3500-ohm plate resistor. This low resistance load provides sufficient drive to the first buffer stage in the transmitter at the end of an RG8U cable 50' long. A 6BA6 crystal oscillator tube permits optional use of crystals whose fundamental frequency must be in the 80-meter band. The key plugs into the v-f-o unit and a toggle switch controls carrier on-off for phone operation.

**Engineering Research Associates, Inc., 1902 W. Minnehaha Ave., St. Paul 4, Minn.*

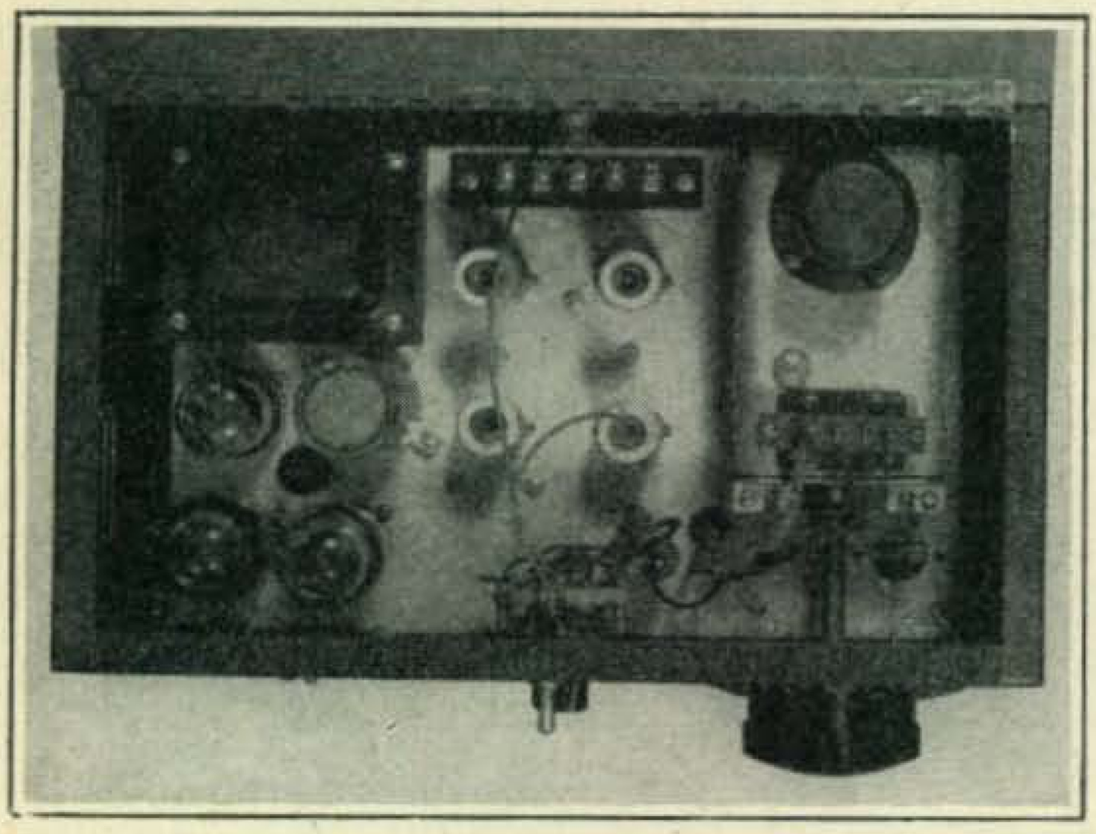

Fig. 7. Circuit details and photo of the isolating buffer incorporated in the table-top control unit. Components C1, C2, K1 and K2 are explained in the text.

Relay *K1* is a 300-ohm midget telephone type which removes voltage from some of the tubes in a Collins 75A receiver, and transfers this voltage to a built-in audio oscillator for c-w tone monitoring. When phone is used, the phone switch opens the monitor lead to prevent audio tone on phone. The relay *K1* although not a good keying relay, is sufficiently fast for monitor purposes; and, of course, does not affect the transmitter keying. Relay *K2* is a sensitive 8000-ohm Sigma type 41 relay operated by *K1*. The coil of *K2* is shunted by *C1*, a 20-μf 50-volt electrolytic paper condenser. This condenser provides sufficient time lag on *K2* so that the crystal oscillator and buffer tubes have their cathodes grounded during normal transmission. If the key is released for a short time, the relay releases, thus removing excitation, and the operator can receive on any frequency, including his own v-f-o frequency. This results in semi-break-in operation. This compromise in break-in was required since keying in the buffer stage, as first tried, resulted in severe key clicks which did not yield to the usual RLC contact filtering. Since wave shaping of the keyed characters in the early stages is extremely difficult in any event, it was decided to key the 807 buffer and screens of the 4-125A final amplifier tubes, which is done by keying the negative 550-volt ground lead. This resulted in satisfactory keying without excessive clicks.

A short piece of wire around the 6AK5 tube comprises *C2* which is connected to a toggle switch,

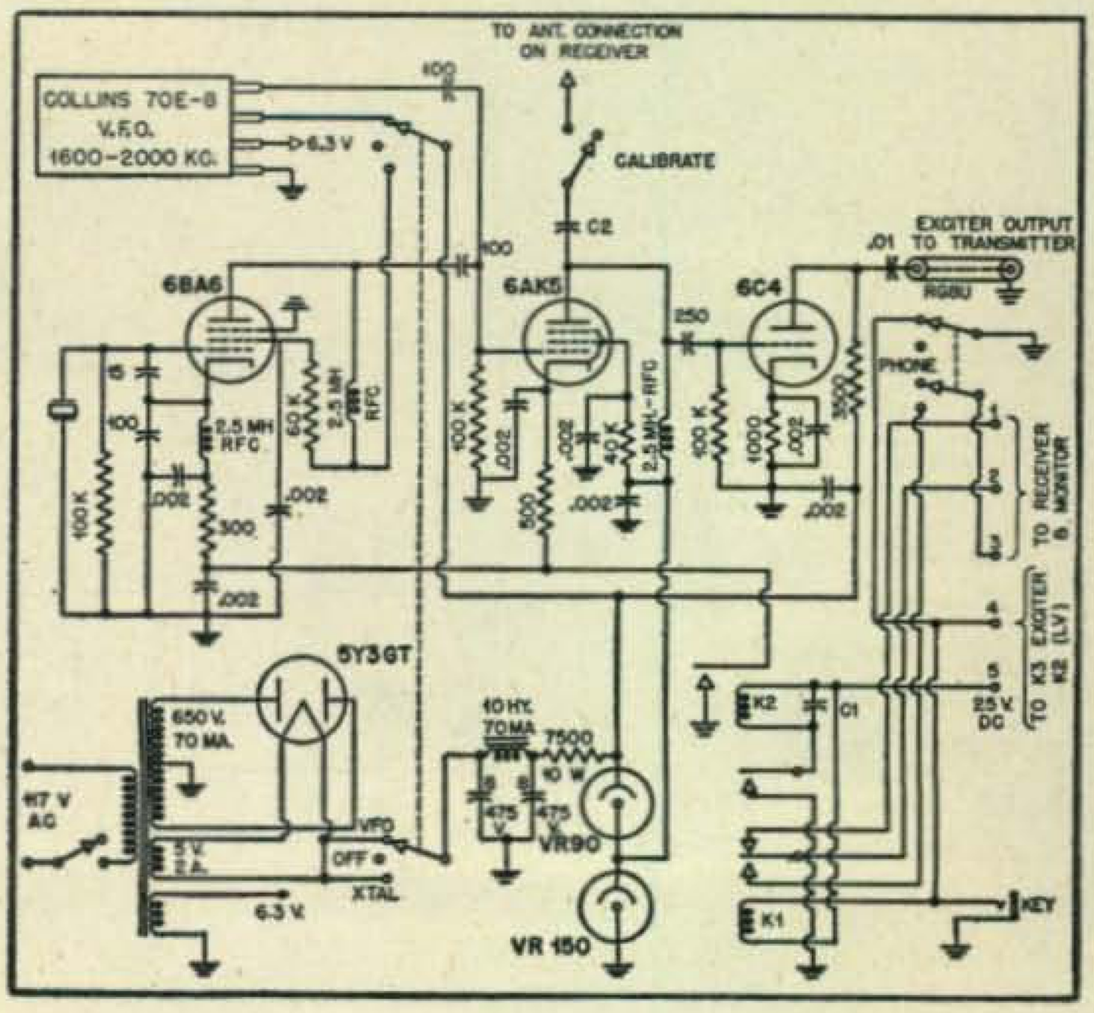

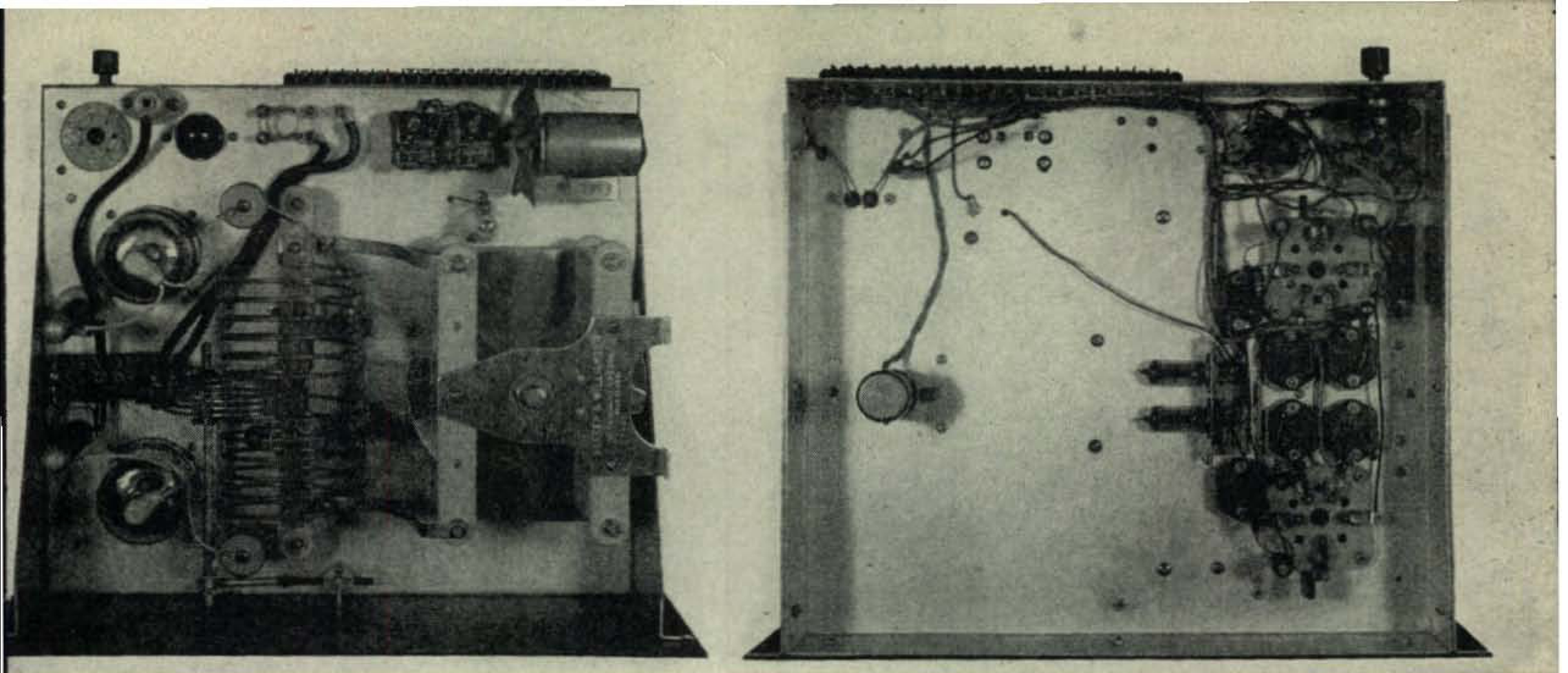

Top and bottom view of the final amplifier employing Eimac 4-125As.

and then to the receiver antenna terminal. This permits switching in and out v-f-o pickup in the standby position which is useful for frequency spotting. It is essential that the v.f.o. be well shielded, and it may be necessary to bypass the a-c line and other leads coming from the v-f-o unit to keep the feed through to the receiver down below normal signal levels.

The transmitter is built in a 42" Parmetal cabinet, and consists of four units. The top unit (*Fig. 8*) is the 4-125A power amplifier, and has a single control knob for varying link coupling.

The second unit down (*Fig. 9*) contains the r-f exciter and speech amplifier. This unit contains all meters, the band switch, a meter switch, clipper level control and a jack for microphone input.

The third unit (*Fig. 10*) contains the low voltage power supplies, relay supply voltage, bias supply voltage, and the modulator. It has main POWER ON-OFF switches, TUNE-OPERATE switch, HIGH VOLTAGE ON-OFF switch, and the PHONE-C.W. switch.

The fourth unit (*Fig. 11*) contains the high-voltage power supply and its associated relay system. It is mounted directly on the bottom of the cabinet, and has the overload reset button on the panel.

The upper three units are mounted on 17" x 13" aluminum chassis 3" deep. These units are front panel supporting by means of two 1/8" aluminum brackets with the lips bent out. These lips extend out to the panel edges, and thus support the entire chassis weight against the edges of the cabinet. This permits the use of 1/8" aluminum panels without warp or deformation. The panels are painted black wrinkle finish and controls marked with Millen decals to provide a finished appearance. Casters on each of the four corners of the cabinet permit it to be rolled about.

Exciter-Speech Amplifier Unit

The exciter-speech amplifier unit (*Fig. 9*) is laid out with both low-level stages going from the front to rear. The layout of these units is close and compact, but no difficulty was experienced with r.f. from the exciter getting into the speech amplifier. However, r-f difficulties were experienced with the final amplifier on, and this was remedied by putting an r-f filter in the microphone lead and small shunt capacitors from plate to ground in the first two audio stages. Additionally, electrolytic cathode bypass condensers are shunted by r-f bypasses.

The speech clipper circuit choke *CH1* is 3.75 henries and should be a high quality audio reactor. The MODULATION adjust control is located on the chassis and is a slotted control with a lock. Modulation should be adjusted for approximately 90% and this control locked. This adjustment must be made using a scope or modulation meter since serious splatter will result if clipping is used with overmodulation. The degree of clipping is controlled by the CLIPPER front panel adjust control.

The exciter is fed from the coax to a 6AK5 buffer into a 6AK5 doubler. The 6AK5 doubler operates into a 6AK6 buffer, and automatic tuning is then applied between input and output of the buffer.

A 6AG7 is used as doubler, tripler, and quadrupler on 20, 15, and 10-meter operation, respectively. On 80 and 40 meters, the 807 is driven directly from the 6AK6 operating as buffer and doubler

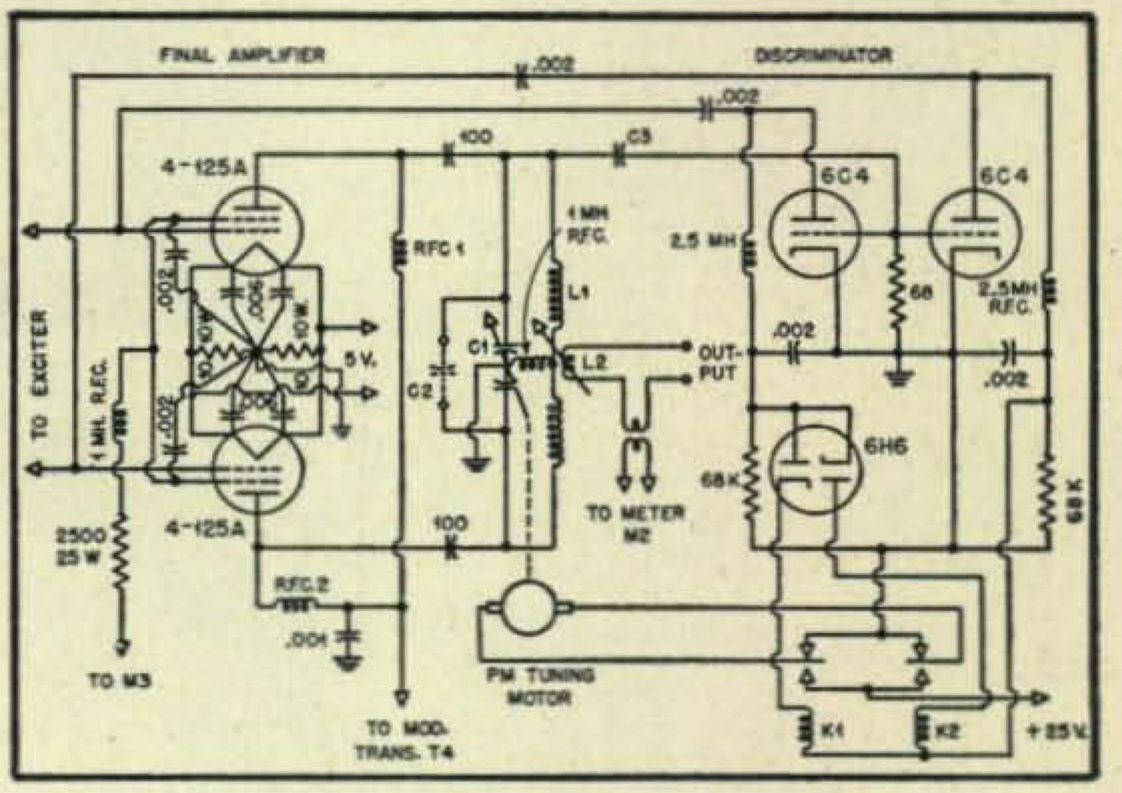

Fig. 8. Final Amplifier Circuit.

C1—26-82 $\mu\mu$f per section, B & W Type CX45C
C2—25-$\mu\mu$f 7500-volt vacuum condenser, G.E. Type GL1L36.
C3—See text.
RFC1, RFC2—180 turns at 40 turns per inch, No. 30 wire on ¾" diameter form. NOTE: Spacing of turns is important.

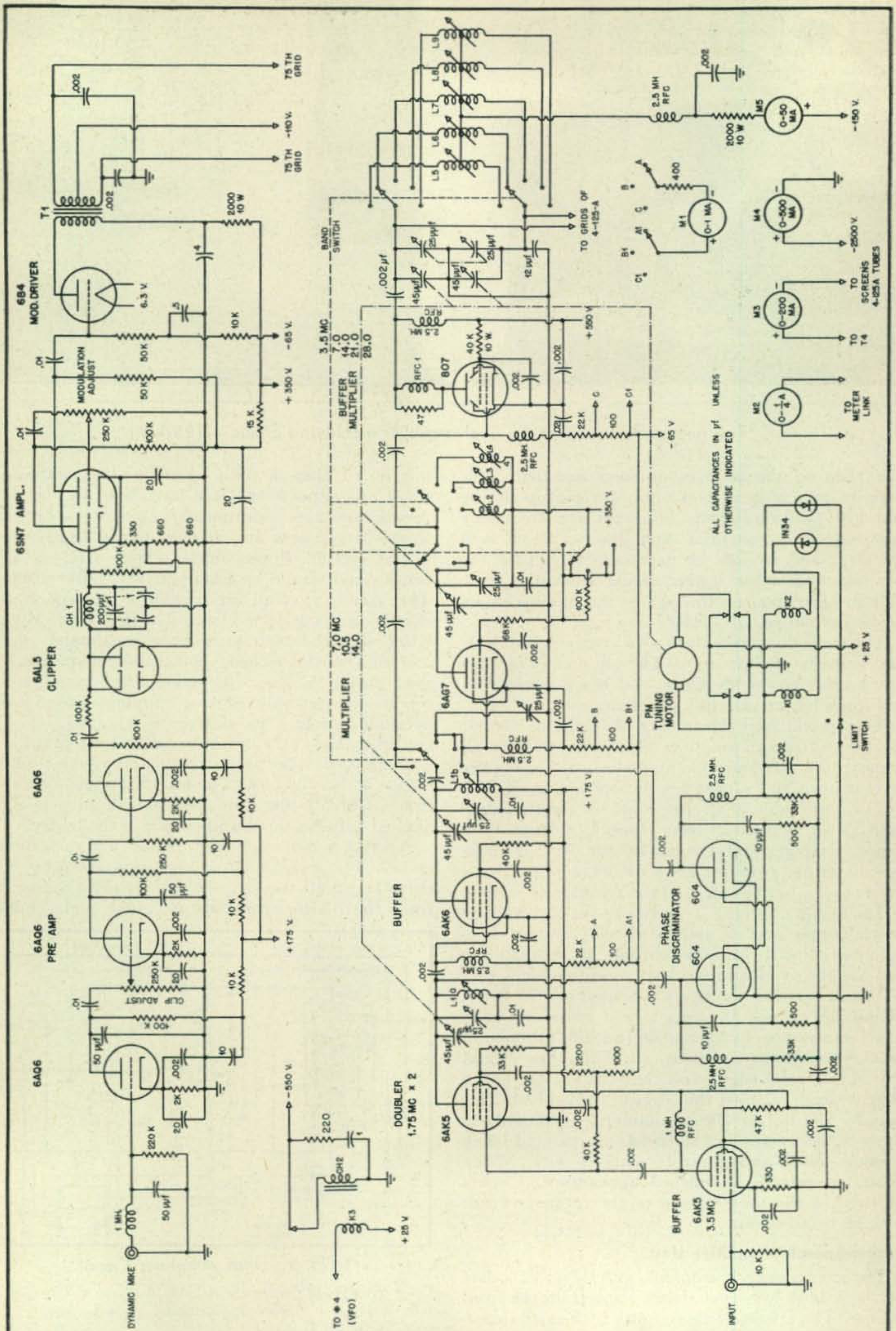

Fig. 9. Exciter and Speech Amplifier Circuit.
K1, K2—see text.
K3—1000-ohm Sigma type-keying relay.
CH1—See text.
CH2—0.15-h 200-ma choke.
T1—2500 ohm primary to 15,000 ohm total secondary.

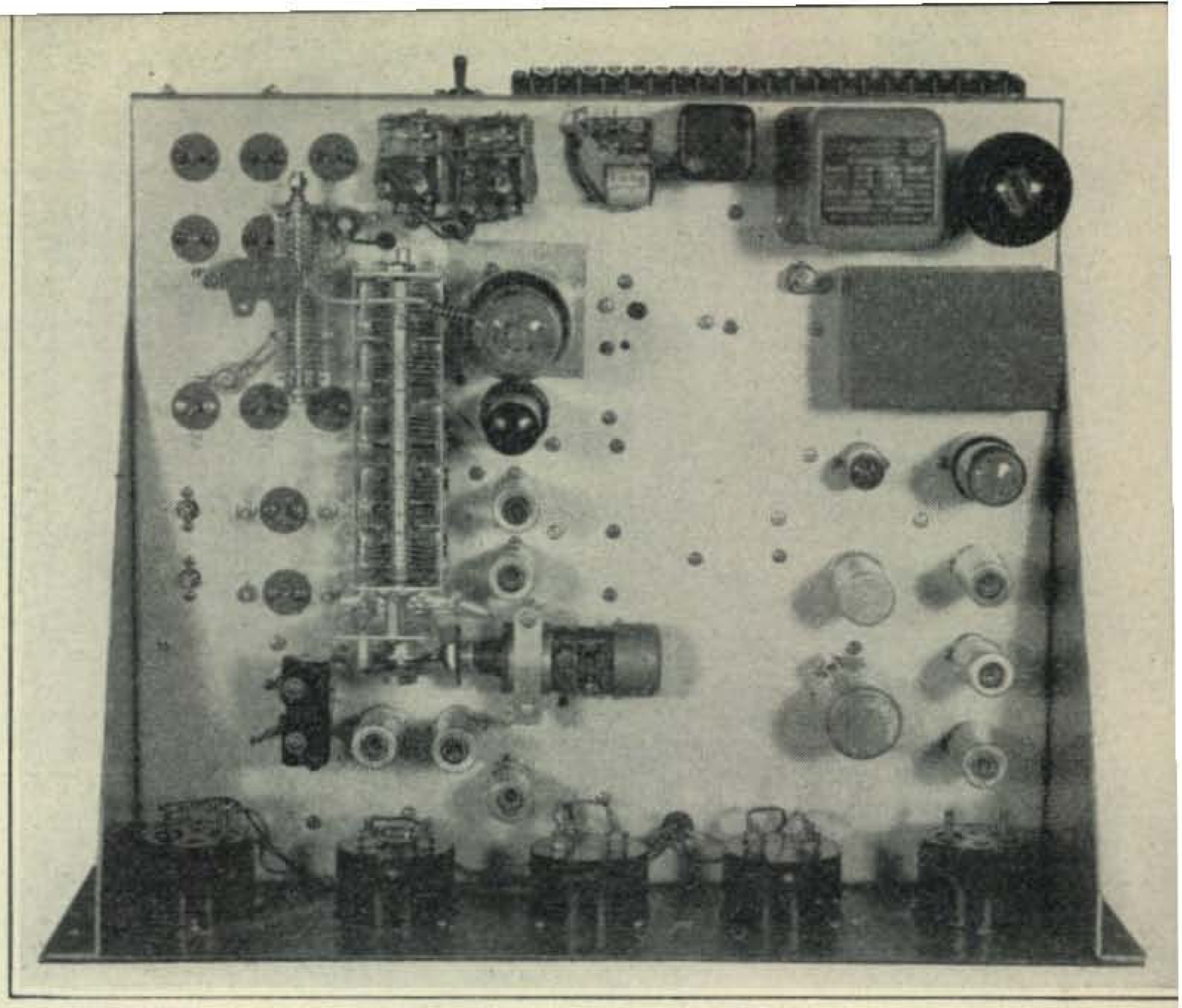

Looking down on the ganged automatically tuned exciter and the modulator speech amplifier on the right hand side of the chassis.

◆ ◆ ◆

respectively. On 20, 15, and 10 meters the 807 always operates as a doubler driven by the 6AG7. *RFC1* is a parasitic choke which consists of six turns No. 18 wire wound about the 47-ohm 1-watt parasitic resistor.

A five-gang variable with a capacity range of 10 to 45 $\mu\mu$f is used to tune the exciter stages. This condenser has a 3/32 plate spacing and is a surplus market item. The exciter coils *L1* to *L9* inclusive are wound on 1″ x 1¾″ ceramic forms. Powdered iron slugs 5/16″ wide by 3/8″ long are used for trimming, except the 807 10 and 15-meter coils which are tuned by similar sized brass slugs. This trimming can, of course, be accomplished by moving turns on the coils. If slug tuning is used, it should be remembered that iron will increase inductance whereas brass will decrease it. Because of variations in available tuning capacitors, switching systems and other variables, no coil winding data is given. Incidentally, a grid dip meter[1] is invaluable for the exciter tracking and tuning work as well as coil winding.

Exciter Automatic Tuning

The adjustment of the exciter automatic tuning is straightforward. The circuits are lined up in the usual manner of ganged circuits with the 5-gang tuning condenser rotated manually. The v.f.o. is then set up for the center of the 80-meter band, and the tap on *L1* adjusted until best automatic tuning action results when the condenser is rotated either side of resonance. Improper adjustment will result in the motor tuning the condenser through resonance until the limit switch stops the motor.

1N34 rectifiers in series with *K1* and *K2* provide polarized relay action. These relays are 18,000-ohm Sigma type 4F relays and should be adjusted for maximum usable sensitivity.

The permanent magnet tuning motor is a geared down 250 r.p.m. motor used in gun computers and available on the surplus market.

The low voltage, bias supply, and modulator unit (*Fig. 9*) is built largely of surplus items, and this accounts for the unorthodox circuits. Standard transformers *T1* and *T2* with 5-volt filament windings will permit the use of 5Y3 or similar rectifiers in place of 6X5s. Because 28-volt d-c relays are plentiful and inexpensive on the present surplus market, it is worthwhile to obtain a copper oxide or selenium rectifier of 25-volt, 2 to 3-amp. rating for relays and d-c motor supply. Transformers with output of 20 to 30 volts a-c are occasionally available; if not, an open frame 866 rectifier transformer can easily be rewound with No. 16 or No. 18 wire to obtain this voltage.

Regardless of what transformer-rectifier system is used for bias, the bleeder system shown is workable. The series 500-ohm resistor should be replaced by some value which does not permit the VR150 tube to glow with key up, but permits it to glow with key down. *K1* is a 500-ohm midget telephone type relay and provides tube protection in case of bias failure.

The PHONE-C.W. switch is a large telephone type switch performing a number of functions. It opens the modulator filaments on c.w., shorts out the screen winding on *T4*, removes the speech amplifier filament voltage, and additionally operates

[1] "About Grid-Dip Oscillators," Bane, *CQ*, Mar., 1947 "The Dipper," Scherer, *CQ*, May, 1947.

◆ ◆ ◆

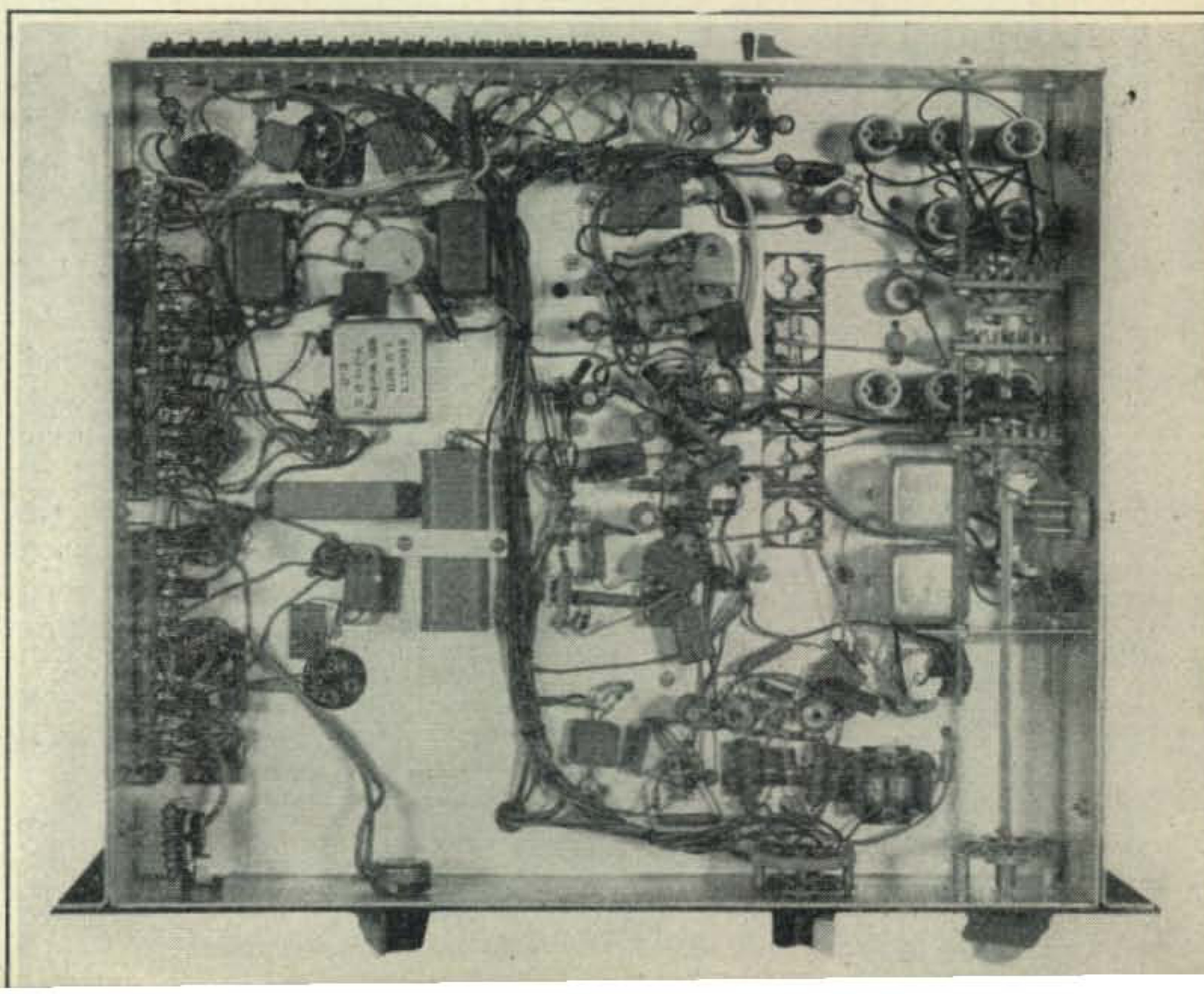

Under chassis view of the exciter and modulator. Crowding is avoided by the use of large size chassis.

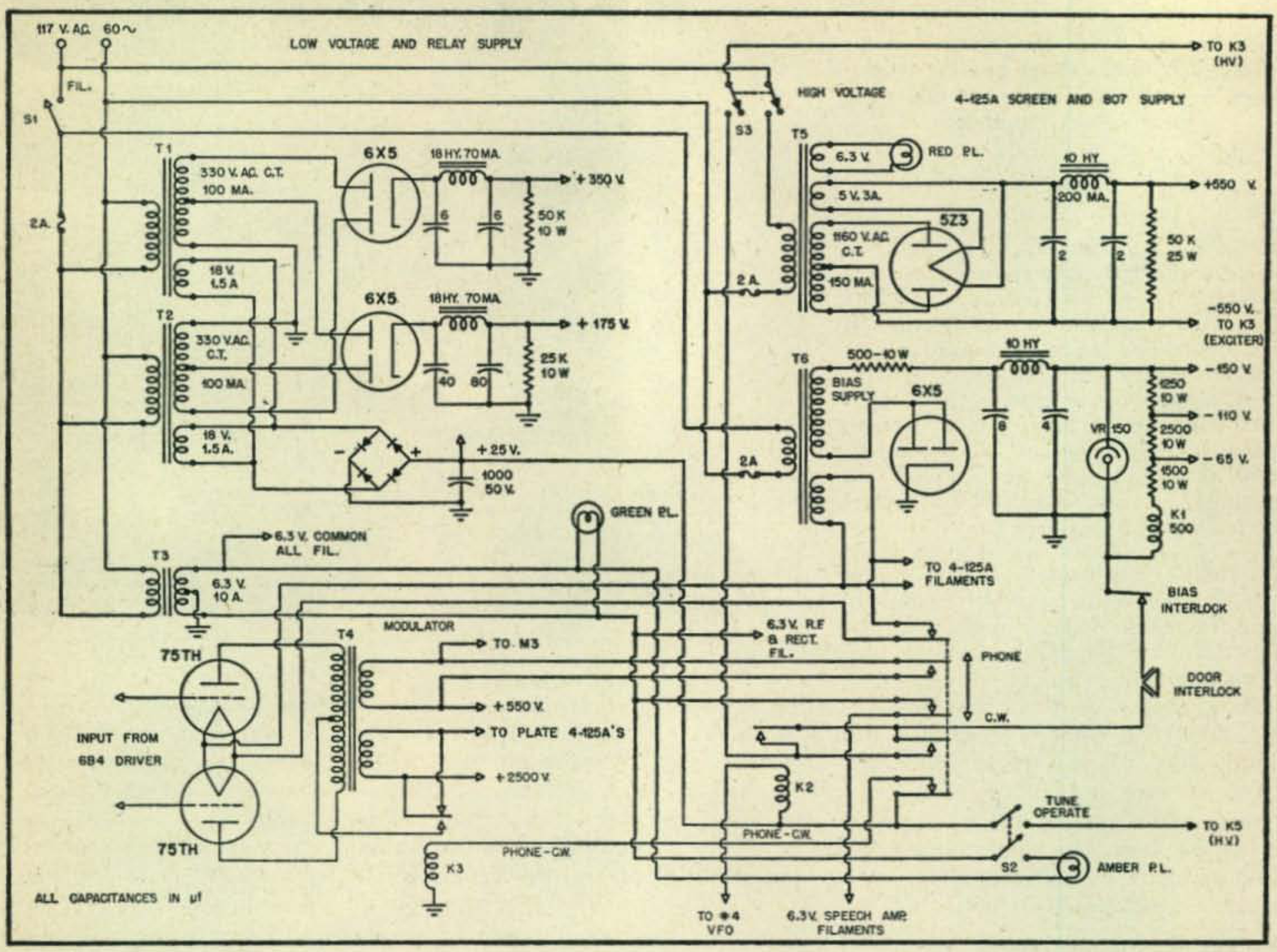

Fig. 10. Low Voltage D-C Supplies and Modulator.

K1—500-ohm midget telephone type.
K2—500-ohm midget telephone type.
K3—28-volt coil h-v relay. Insulation 2500 volts to ground; 2500 volts across contacts.
T4—18,000-ohm plate-to-plate primary to 10,000 secondary. See text regarding screen winding.

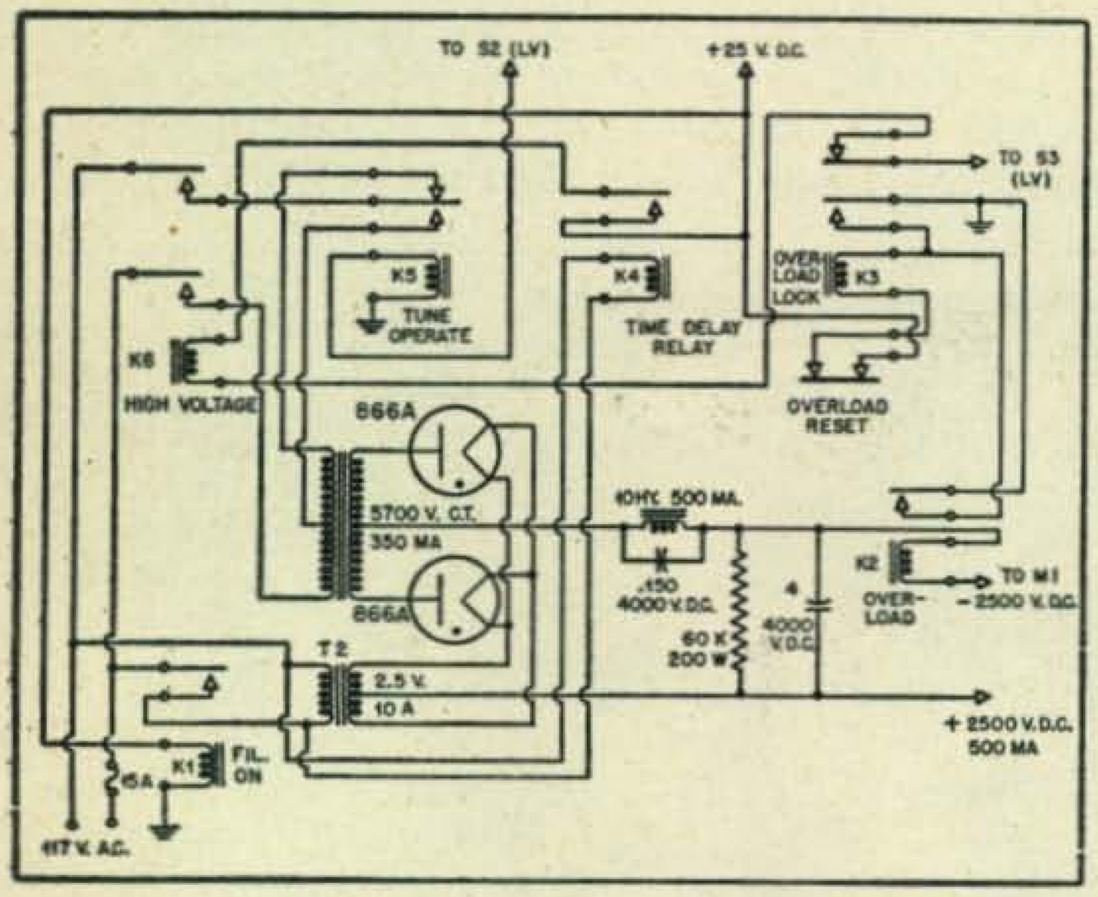

Fig. 11. High Voltage D-C Supply.

K1—28-volt coil, 5 amp. contact rating.
K2—Current relay adjusted to operate at 0.5 ampere.
K3—500-ohm midget telephone type.
K4—Thermal time delay relay, Haydon series 5900 or Advance Electric 301B.
K5, K6—28-volt coil, 10 amp. contact rating.

the relay *K8* which removes plate voltage from the 75THs, and shorts out the secondary of *T4* on c.w. On c.w. the high-voltage supply is normally on at all times, but on phone, relay *K2* actuated by the phone switch in the v-f-o unit turns high voltage on and off. This is necessary since the regulation of the high-voltage power supply causes the 75THs to draw excessive plate current without normal Class C load, and also prevents damage to the modualtion transformer without a load on its secondary. The modulation transformer, *T4*, has a screen winding, but this is not required if the screen is fed through an audio reactor of about 10 henries capable of handling about 80 ma.

The high-voltage power supply and its relay system (*Fig. 10*) is conventional. If the overload relay kicks *K2* out, overload lock relay *K3* closes, and the reset button must be pressed to obtain high voltage again. A primary tap cuts voltage in half for tuning or reduced power.

PA Details

The final amplifier (*Fig. 8*) uses a B & W butterfly tuning condenser, and the kilowatt HDVL coils and coupling link. A rack and pinion drive together with a lever arm permitted the central panel location of the link coupling knob. Since automatic tuning is used, the layout was made more conveniently across the chassis instead of front to rear. This made the 4-125A tube location favorable with respect to the 807 driver. The B & W tuning condenser was mounted on its end and the tuning motor was put on the chassis beneath it.

(*Continued on page 93*)

AUTOMATIC KILOWATT

(*from page 38*)

The discriminator tubes for automatic tuning are mounted on a bracket beneath the chassis. The discriminator coupling condenser, *C5* consists of an 8-32 oval head screw on a ceramic standoff to the rear of the chassis behind the B & W tuning condenser. It is spaced roughly ¾" from the stator plates. The 68-ohm carbon phasing resistor drops from this screw directly to the chassis ground. Since this variable condenser can rotate continuously, no interlock switch is needed.

If the circuit constants shown are used, no adjustment of the automatic tuning is necessary. This unit was placed in operation with no adjustment other than trying several values of phasing resistor. If the sensitivity of the discriminator is insufficient to operate the tuning during normal QSY procedure, the value of this resistor may have to be increased. If too large a resistor is used, excessive grid voltage will wreck the 6C4 tubes, and excessive feedthrough may require final amplifier neutralization. No attempt should be made to prevent hunting with no load on the final, since the high Q causes very sharp phase shifts slightly off resonance. The hunting will stop when the amplifier is loaded, if proper motor speed is used.

When changing bands, normally rotate the tuning condenser to its approximate position by manually operating relays *K1* and *K2*, *Fig. 8*. This precaution may be necessary since the condenser can be rotated out of the discriminator range.

A ½" diameter coupling loop in series with one link lead connects to a 0-¼ r-f ammeter providing an indication of link loading. This meter and the final plate meter will provide sufficient evidence of proper final amplifier tuning and loading.

This transmitter has been in use for the past five months, with some operation on 40 meters but most operation confined to 20-meter phone and c.w. The antenna used is a half-wave Zepp on 40 meters. By selecting a very high L/C ratio, the need of antenna tuning has been eliminated. On 20 meters the antenna is parallel tuned with about 6-$\mu\mu$f capacity across 12 microhenries. A link from this coil connects through a section of RG8U cable to the final tank coupling link. When operating c.w. from 14,000 to 14,200 kc, the final plate loading varies from 800 to 1000 watts. When operating 20-meter phone, the loading is set for nominal plate current in the center of the band and does not vary more than ± 15% from one end to the other. The antenna tuning is never touched for 20-meter operation, thus it is merely necessary to change loading when going from c.w. to phone.

Within the mentioned limitations the transmitter is positively single dial control. This places no restrictions on QSY, and has made DX chasing on 20 a pleasure. Incidentally, v-f-o operation is swishless, and no key down periods for tuning are required.

THE NEW
Bee·Bee
NB-FM
MODULATOR UNIT
MODEL 500



AM PHONE QUALITY WITH NB-FM.

Here's the answer! This new reactance type modulator is designed for direct coupling to the VFO or crystal socket of a conventional crystal controlled pentode or triode oscillator. It means that you can get NB-FM operation with your present rig, without expensive speech equipment; you can run your phone rig on CW ratings. Phone quality depends solely upon your mike. Clears up most BCI troubles. The Bee-Bee unit is not an exciter and does not eliminate or duplicate any of your present equipment. Amateur net, complete with tubes and instructions:

$18.95

See your distributor today, or write direct to manufacturer:

Bee·Bee
Electronic Co.
2692 W. PICO BLVD. • LOS ANGELES 6, CALIF.

Peripheral Knowledge

During the search for classical AM information, other articles appeared that were too good to pass up. This section contains the edit staff's picks. Hope you like them!

setting the pot at zero maintains the 10 percent point, while opening the pot to 20 percent on position 2 gives you an effective 12 percent of total range. In this manner, the entire range is covered.

The idea can be expanded by adding one more switch and 18 more fixed resistors as shown in Fig. 2 to give the equivalent of a 100-turn potentiometer at the same cost as a standard 10-turn unit. This amount of resolution would allow you to choose an output voltage between say 50 and 150 volts to within 0.01 volt if desired (a diagram of such a supply is shown in Fig. 3.) For most purposes, though, the unit of Fig. 1 will suffice.

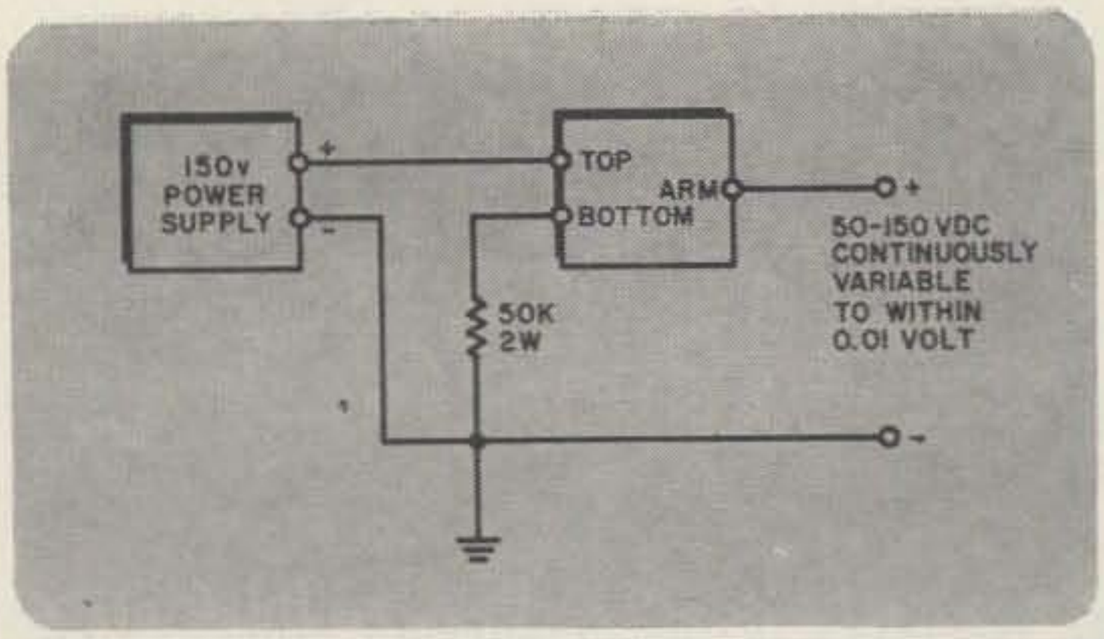

Fig. 3

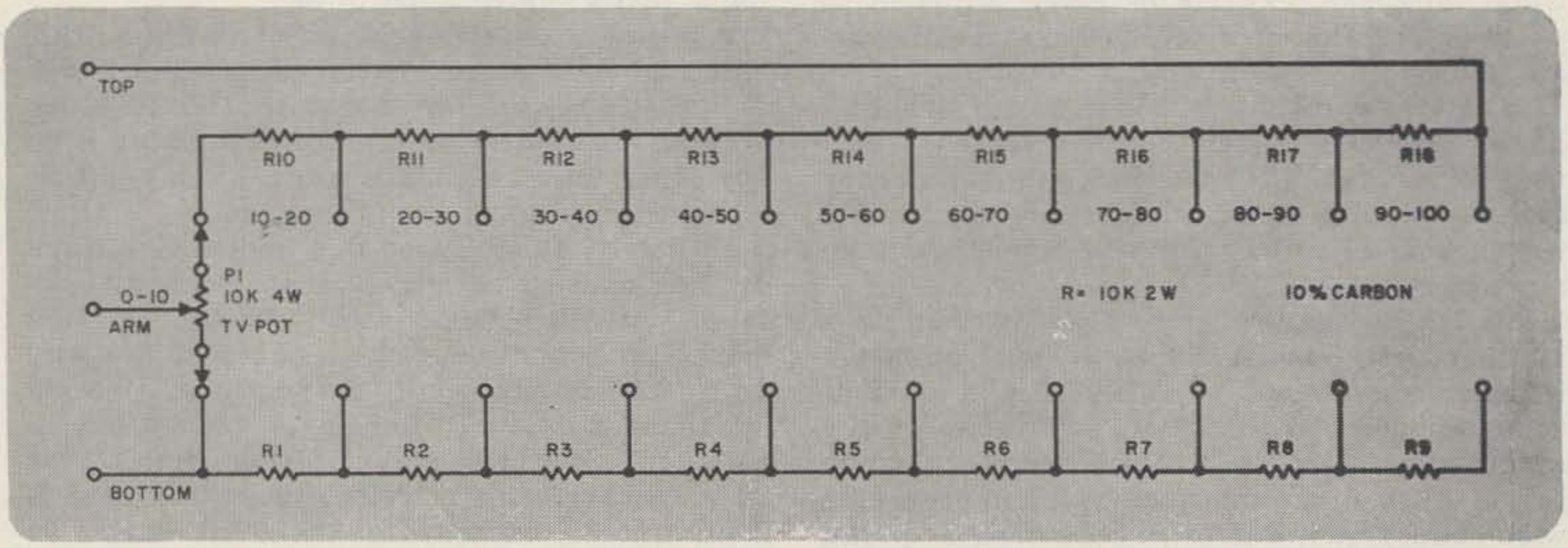

Fig. 1

Blowers: Facts and Figures

Melvin Leibowitz W3KET
220 West 4th Street
Wilmington 1, Delaware

FORCED air cooling in ham transmitters; virtually unheard of a decade ago, is now becoming commonplace. It is the purpose of this article to help the home-brewer select the proper blower as information on this subject in contemporary literature is virtually nonexistent.

There are two general situations that require forced cooling. The first is where a lot of heat is produced in a confined space as in a high power final amplifier. Short lead construction and thorough shielding required in modern construction seriously restricts the natural flow of air and something has to be done to get the air moving again. This problem can be solved simply by placing a 3 or 4 inch fan at a strategic place in the enclosure so that it will stir up a breeze.

The second situation can not be treated so lightly. This is where external anode tubes

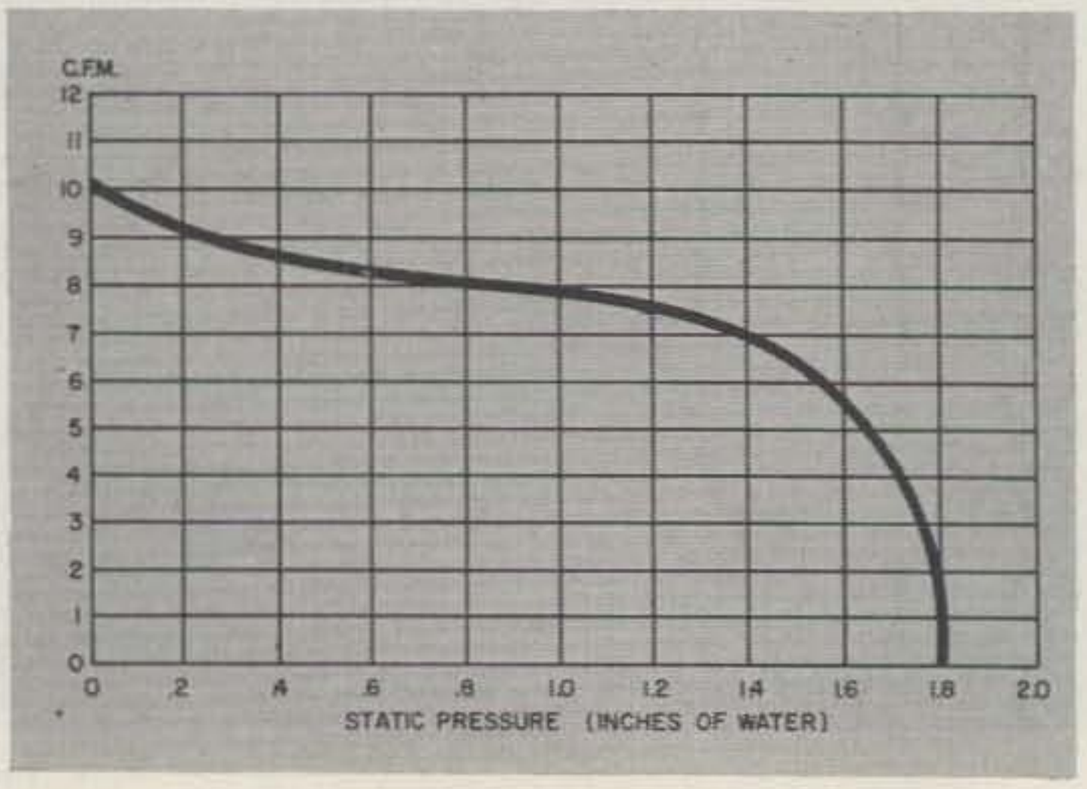

such as the 4X250, PL172, 4CX1,000, etc. are used. These tubes must have a definite amount of air blown through their plate structure if normal tube life is to be expected. In-as-much as these tubes are expensive, tube life becomes a serious consideration and the ham designer will want to be sure that he is supplying enough air.

Most hams will obtain their blower from military surplus. Very often they will not be rated in terms of air output but the motor speed and blower size are almost always given. The charts and tables given here will help you to determine the output of your blower. Blowers come in several different sizes according to the wheel diameter. These range from a number 1 to number 3 as shown in Table 1. The size of the blower is usually stamped or moulded into the side of the housing. Table 1 also lists several common speeds for each size wheel and the corresponding output. You can still determine the output if your blower speed is not listed by interpolating between the figures given. This is not strictly accurate but close enough for all practical purposes. These figures are typical but not necessarily exact as the thickness of the wheel also influences the output. It is most important to stress that the figures in Table 1 are for blowers working into open air, not under pressure.

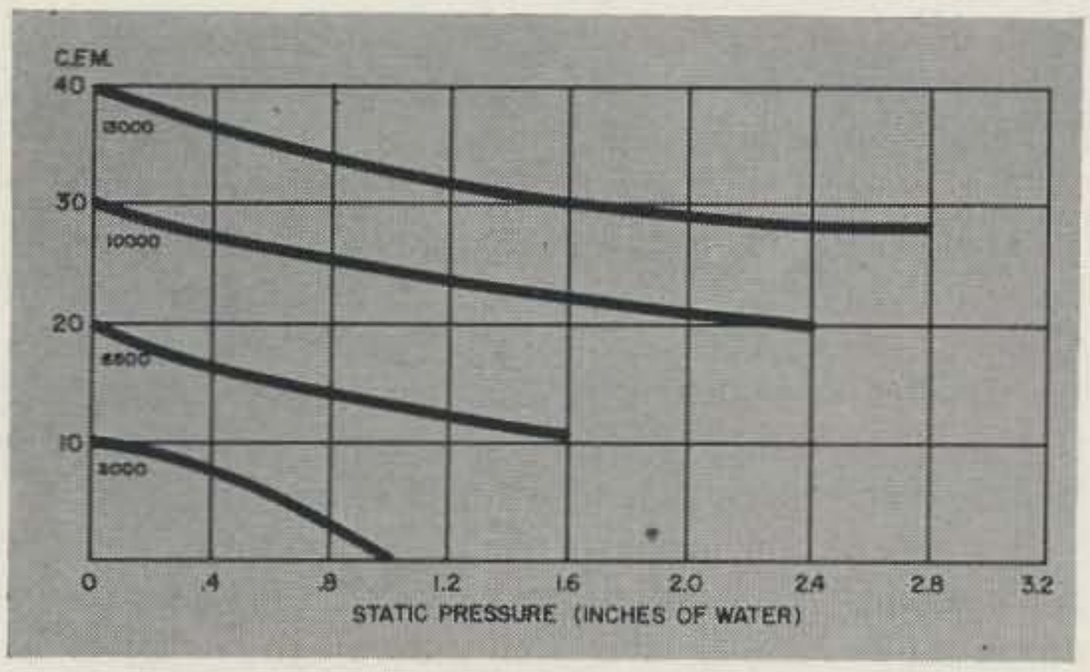

The output will drop under pressure. Figures 2, 3, and 4 show the output of different size machines at various pressures.

The tube data sheet will tell you how much air is required and at what pressure. Two tubes will require twice the volume of air but the pressure will be the same as for one tube. It would be wise to allow a safety factor of at least 2 and preferably 3 as there will be some air leaks in the system and other losses.

Inspection of Table 1 shows that small blowers must turn at very high speeds in order to produce usable amounts of air. Small blowers are to be avoided for this reason if quiet operation is desired. The motor itself may be quiet but the high speed chopping of the air by the fan blades tends to set up a loud hiss approaching an effect something like a siren. There is bound to be more vibration in a high speed motor than in a slower one. For reasons of quietness then, select a slow speed machine

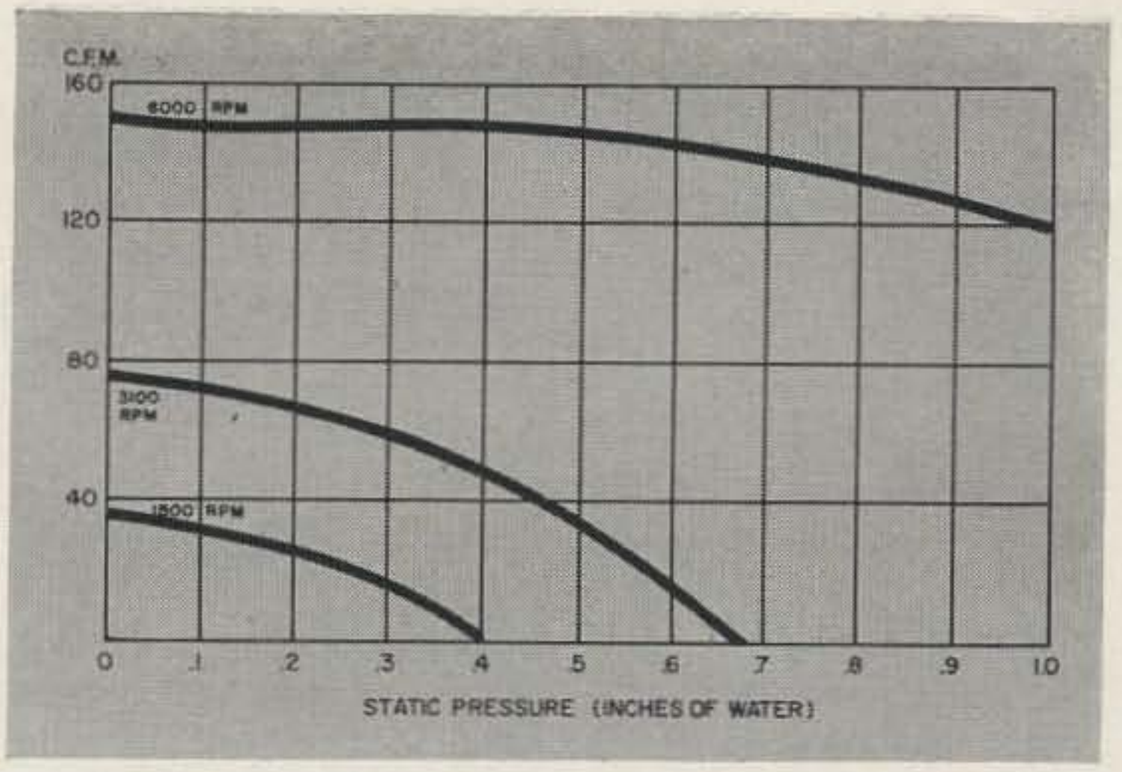

about 1500-3000 R.P.M.

If you intend to buy a surplus blower bear in mind that many of them are brush type motors designed for low voltage direct current. They will work on A.C. but there is a possibility of them causing QRN in the receiver. It may or may not be possible to filter them by bypassing the brushes to the case of the motor.

In summation: select the largest, slowest blower that you can fit in the cabinet. Allow a safety factor of 2 or more. Clean the rotor blades every few months particularly if your transmitter is located in your living quarters as the blades will pick up quite a bit of lint and dust. A pipe cleaner moistened in water is good for this. Be very nice to your parts supplier and he may let you select the quietest machine from his stock.

Many hams are needlessly prejudiced against forced air cooling, but if the principles set forth here are followed, dependable, quiet operation will result. . . . W3KET

Table 1

Size	Speed	Output C.F.M.
1	18,000	9
1½	3,000	4
	8,000	12
	11,000	17
	15,000	23
2	3,000	10
	6,000	20
	10,000	30
	13,000	40
2½	2,750	17
	6,000	35
	9,000	52
	12,000	70
2¾	1,500	25
	3,000	55
3	1,500	40
	3,000	75
	6,000	150

Notes on Narrow Shift

Boyd "BeeP" Phelps, W9BP, WØBP
4232 Scott Terrace, Minneapolis 16, Minn.

The original thought proposed at the N.Y. RTTY gathering in March was for a handful of amateurs to seek special temporary authority to experiment with 170 cycle shift. The idea has been made more flexible to include any shift under 900 cycles and broadened to include any experimenters who may come and go without paper work, so narrow shift is of keen general interest.

At this writing, the change in amateur regulations is pending before the FCC, but no serious hurdles are anticipated. The advantages of narrow shift benefiit both the RTTY and CW factions as far as interference is concerned, and the improvement in selective fading holds considerable promise of improved results. (See CQ, Aug. 1955, p. 30-31)

Time and use will determine the best equipment to use, but some notes, suggestions and report on preliminary tests may be in order. It is a certainty that stability in transmitters and receivers is very important. For example, if we have been using "mark" and "space" filters 200 to 300 cycles wide for present 850 cycle shift, it is to be noted that 170 cycle shift is just 1/5 as much, and comparable band pass filters would be only plus and minus 20 to 30 cycles wide, which gives some insight into transmitter and receiver stability needed. A number of VFO's heard on the air need rebuilding anyway as the radio art progresses, and the half bushel of crystals that wouldn't shift 850 cycles would now mostly be usable. Imitation of VHF crystal controlled converters (without frequency multipliers) seems very applicable to narrow shift reception, and long warm-up time of all components in the shack that have any influence on frequency drift is desirable.

There are several systems of terminal units that can be made to work between the receiver and the printer. The venerable W2BFD stagger tuned audio system can be used by straddling the cross-over frequency between the "mark" and "space" frequencies. This is illustrated in Fig. 1 in which the differential diode current is plotted against frequency. Actually alone each amplifier has response into the region of the other amplifier, but where the response is equal the diode currents offset each other. The curve shown is not ideal but illustrates the point that by receiver tuning for 170 cycle shift with beat notes of 2380 and 2550 the 2465 cross-over frequency will be straddled and the resultant currents not far from maximum.

In practice, not only are these filters too broad for 80-40-20 meter operation where interference may be three layers deep in many heterodyne tones, but the straddle act is like balancing a pyramid or cone on its point: theoretically possible but somehow it always seems to go one way or the other on trial. The filters made by Bill Gates of KHJ for a hobby are M derived band pass 200 cycles wide and with low resistance torrid coils approach such nice square block frequency response for 850 cycle shift, but the cross-over point at 2550 cycles is about 30 db down and tuning by the straddle method also critical as well as weak. Some thought has been given to switching a second "space" filter centered at 2125 plus 170 or 2295 cycles, but the "mark" filter would still be broader than desirable so a fresh start with a new pair seems preferable.

It was decided that as the shift was being divided by five, stability, band width and other characteristics having a factor of 5, that for comparison purposes it would be interesting to use audio "mark" and "space" frequencies (produced by receiver tuning) that

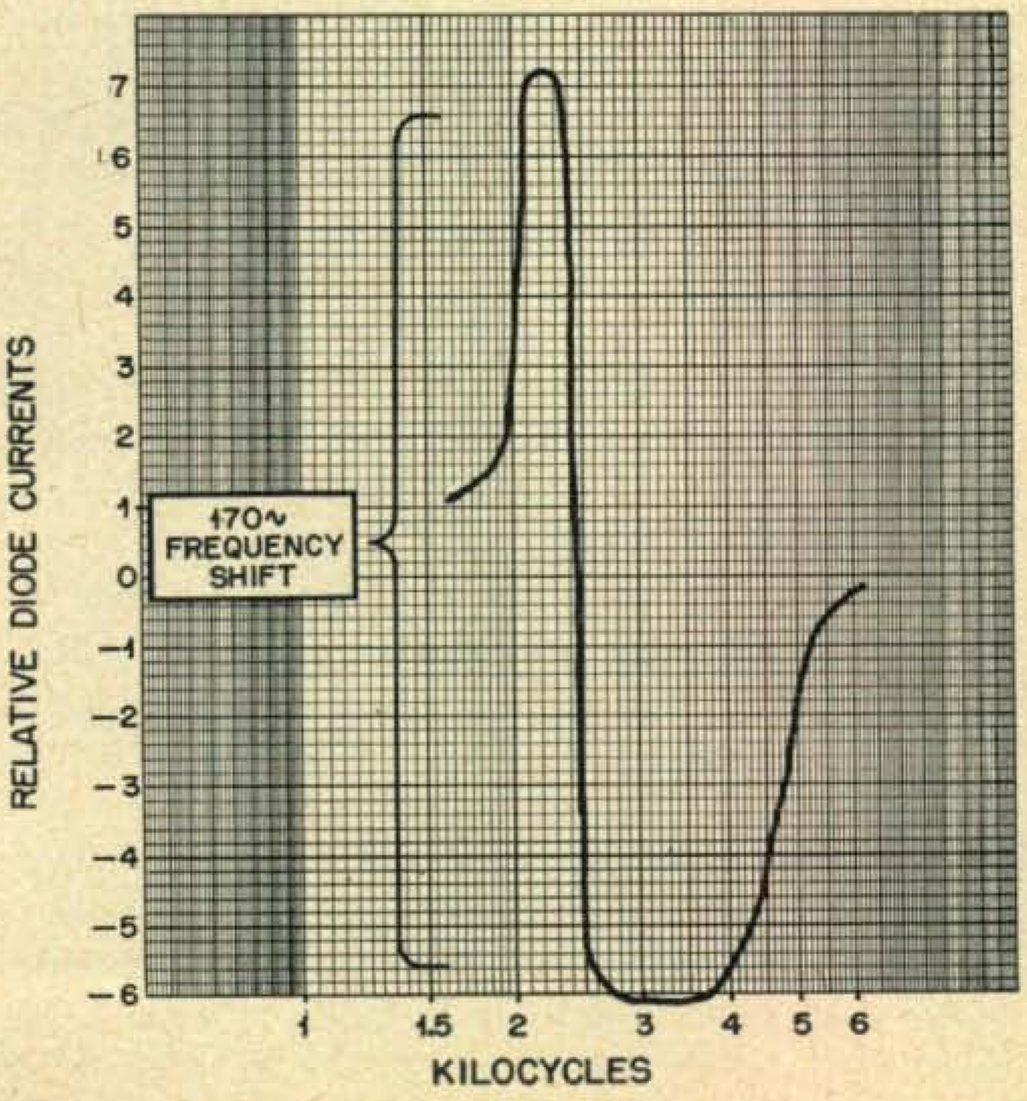

Fig. 1. Diode current vs. frequency.

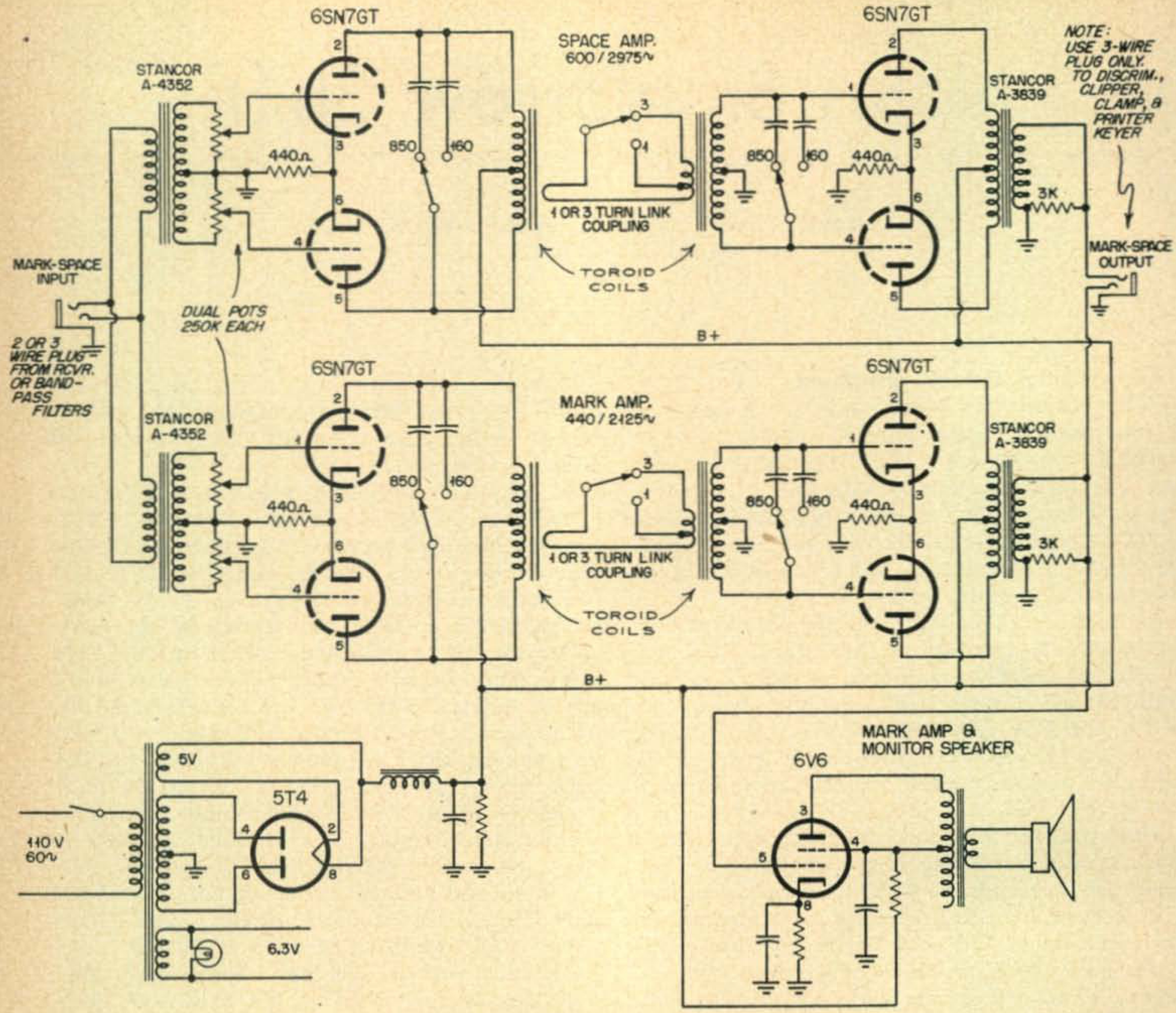

Fig. 2. First experimental model.

would be 1/5 those used at present. This calculated to be 425 and 595 cycles, but realization that amateur audio frequency standards are not especially accurate, the frequencies were raised slightly to match the tones of 440 and 600 cycles transmitted alternately by WWV of world wide range with high power on eight carrier frequencies. The 160 instead of 170 cycle shift is absorbed by receiver tuning with an error of only 5 cycles on each filter which is a fraction of the band width expected. Should this become commonly used, the sub-standard shift can be 160 cycles if we get really precise. Tests can now be made at any hour of the 24 with WWV, to observe response, limiting action, drift, etc for four minutes on each tone.

As the Q or quality of a coil is its reactance divided by its resistance, reduction of coil resistance from over a hundred ohms to just a few ohms by adoption of toroids is a step in the right direction in the field of audio selectivity. A new pair of amplifier channels was hurridly made of junk parts plus some telephone type toroids obtained from W5HZF via W9TCJ. The little doughnuts are smaller than a devalued half dollar, are 88 millihenries, 8 ohms d-c resistance, and no external magnetic field problems. Small capacity coupling between units was a headache because the tuned coils in the unloaded grid circuits were always sharp while the plate circuits, being loaded, had such a low peak that stagger tuning for square flat top response was not obtainable. A better impedance match was obtained with link coupling by threading one turn thru the plate coils and three thru the

Table I

Data on 88 millihenry Toroid Coils

Frequency	Reactance	Calculated Capacity to Resonate
2975 cps	1630 ohms	.0329 mfds.
2125	1150	.0652
600	327	.811
440	240	1.507

Table II

Fixed Condensers Used to Stagger Tune the Audio Filters

F.S. Switch	Amp. Freq.	Input (Plate)	Output (Grid)
"850"	2975	.042 (.022 & .02) mfds	.032 (.022 & .01)
"850"	2125	.057 (.047 & .01)	.069 (.047 & .022)
"170"	600	.85 (.5, .1 & .25)	.75 (.5 & .25)
"170"	440	1.6 (1, .5 & .1)	1.35 (1, .25 & .1)

Variations of several percent are to be expected.

grid toroids. The coils actually have two identical windings which are series connected, so it was a natural to use push-pull all the way thru, eliminating d-c saturation, interstage coupling via power supplies, and the need for cathode resistor by-pass condensers.

The circuit of this first experimental model is shown in Fig. 2. Switching is provided by a four pole five position rotary switch, two positions being used to provide either 850 or 170 cycle shift by changing the values of the padding or tuning condensers across the toroids. Larger toroids would have better low frequency Q, but these were available easily, work excellently, and are commonly thrown out by telephone companies. Table I shows the calculated condenser values to resonate to frequences of interest, but as razor sharp peaks are to be avoided for easier tuning, actual values should stagger each side, somewhat as shown in Table II. The little condenser decade box CDB-3 clipped across the various coils is very handy in tuning and well worth the dozen dollars or so of its initial cost. The diagram needs little explanation to those allegedly skilled in the radio art. Input transformers are Stancor A-4352, line to push-pull grids, dual potentiometers with audio tapers were used, output transformers were Stancor A-3839 push-pull plates to magnetic speaker windings, and the 6V6 with speaker was already on the chassis so was hooked up to monitor the mark signal. A three wire output plug and jack connects to the usual RTTY discriminator, clipper, clamp and printer keyer tube circuits.

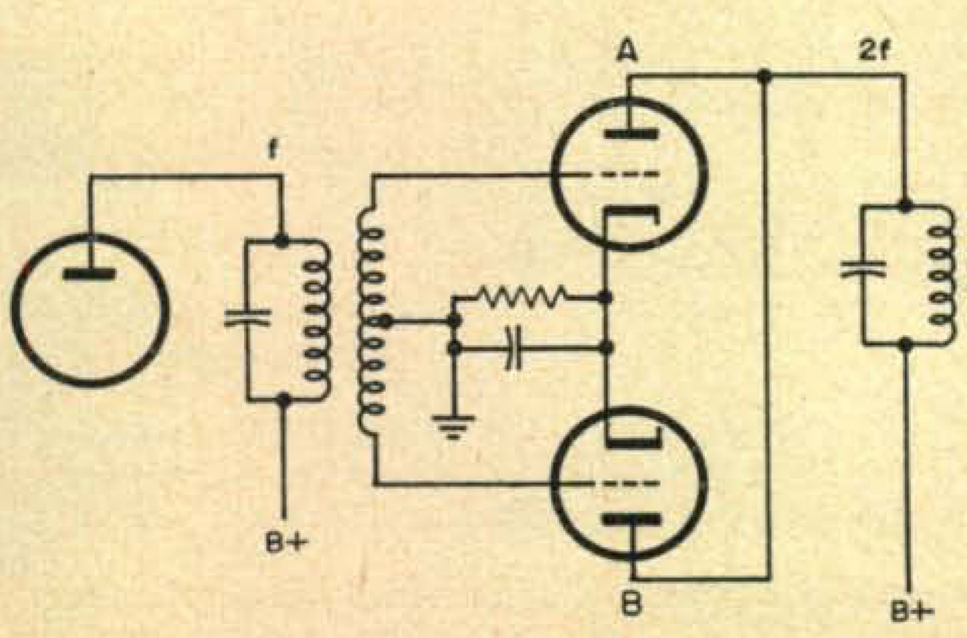

Figure 3.

Tests were run on Aug. 4, 1955 with W9TCJ, Williams Bay, Wis., some 300 miles distant, on 7140 kcs subject to usual fading. As narrow FSK was not authorized, C-W dashes were sent alternately on two frequencies separated 170 cycles and observations made on the output of this unit. The scope presentation instantly changed from horizontal to vertical line, the discriminator diode currents reversed, the printer ran wild on "space" and was quiet on "mark" frequency, and all indications were that RTTY could have been sent and received. Tuning was quite critical but not as difficult as anticipated. No band pass filter was used for 170 cycle tests but the receiver tone control was set at "bass boost" which eliminated a lot of noise.

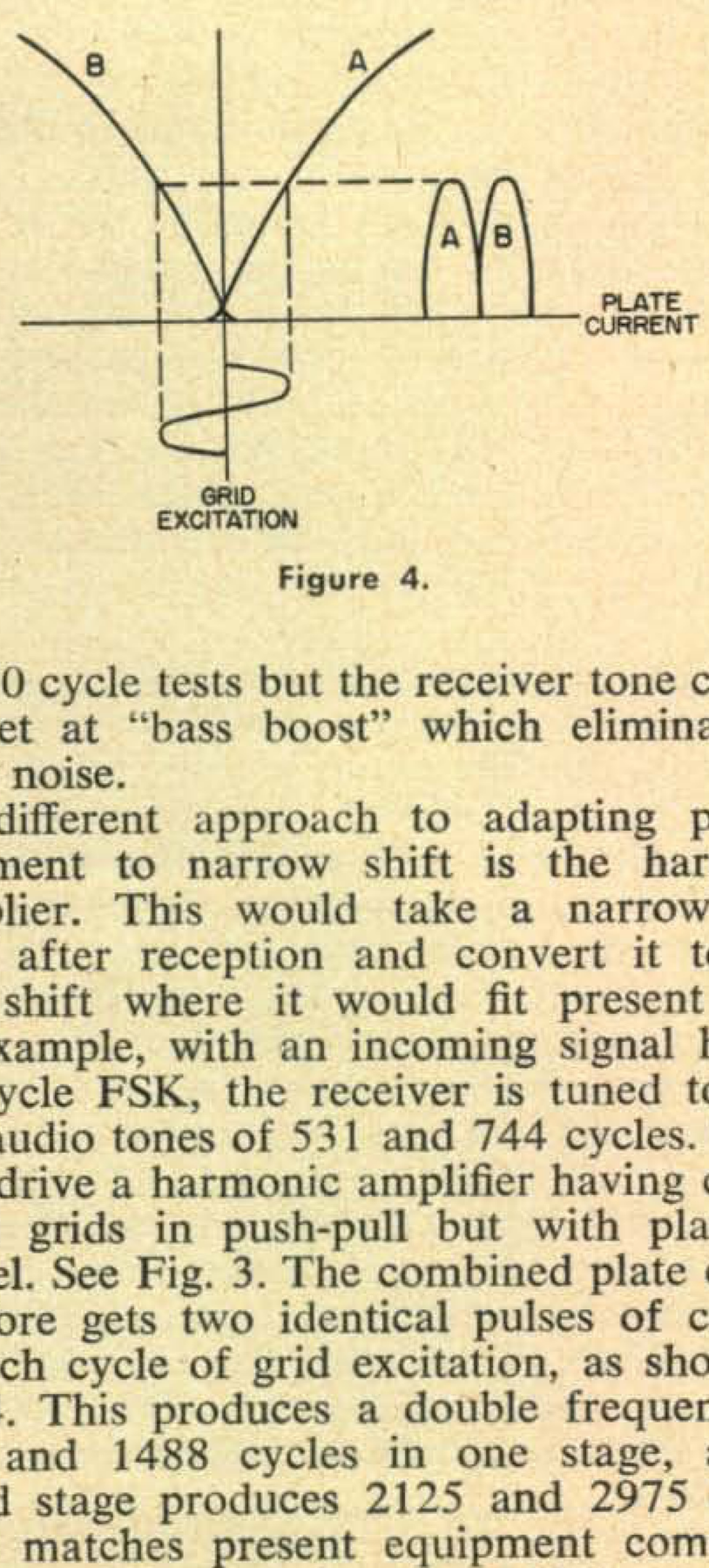

Figure 4.

A different approach to adapting present equipment to narrow shift is the harmonic multiplier. This would take a narrow shift signal after reception and convert it to 850 cycle shift where it would fit present gear. For example, with an incoming signal having 213 cycle FSK, the receiver is tuned to produce audio tones of 531 and 744 cycles. These tones drive a harmonic amplifier having cut-off biased grids in push-pull but with plates in parallel. See Fig. 3. The combined plate circuit therefore gets two identical pulses of current for each cycle of grid excitation, as shown in Fig. 4. This produces a double frequency of 1062 and 1488 cycles in one stage, and a second stage produces 2125 and 2975 cycles which matches present equipment commonly

[*Continued on page 120*]

Chart of Standard Color Codes

A single reference source for all of the generally employed color codes on resistors and capacitors.

APPLICABLE COLOR CODES

DIRECTIONS– Identify similar component type in the proper column on the lower section of the page. Read across the rows at the top to determine the significance or value of the various colors.

COLOR	DIGITS OR NO. OF ZEROS	RESISTORS RMA & JAN		CAPACITORS MOLDED MICA RMA & JAN			CAPACITORS MOLDED PAPER		CAPACITORS CERAMIC RMA & JAN				COLOR	DIGITS OR NO. OF ZEROS
		MULTIPLIER	TOLERANCE	MULTIPLIER	TOLERANCE	CLASS OR CHARACTERISTIC	MULTIPLIER	TOLERANCE	MULTIPLIER	TOLERANCE C>10 μμf	TOLERANCE C≤10 μμf	TEMP. COEFF. PTS./MIL./°C.		
BLACK	0	1		1	20%	A	1	20%	1	20%	2.0	0	BLACK	0
BROWN	1	10		10		B	10		10	1%		-30	BROWN	1
RED	2	100		100	2%	C	100		100	2%		-80	RED	2
ORANGE	3	1000		1000	3% (RMA)	D	1000		1000	2.5% (RMA)		-150	ORANGE	3
YELLOW	4	10000		10000		E	10000	5%	10000 (RMA)			-220	YELLOW	4
GREEN	5	10^5			5% (RMA)	F (JAN)				5%	0.5	-330	GREEN	5
BLUE	6	10^6				G (JAN)						-470	BLUE	6
VIOLET	7	10^7										-750	VIOLET	7
GRAY	8	10^8				I (RMA)			.01		0.25	+30	GRAY	8
WHITE	9	10^9				J (RMA)		10%	.1	10%	1.0	-330 ±500 JAN +120 -150 RMA	WHITE	9
GOLD		.1	5%		5% (JAN)		.1	5%					GOLD	
SILVER		.01	10%		10%			10%					SILVER	
NO COLOR			20%					20%					NO COLOR	

RESISTORS

RMA & JAN COLOR CODING FOR FIXED COMPOSITION RESISTORS ARE IDENTICAL.
COLOR CODE GIVES THE RESISTANCE IN OHMS.

COLOR BAND SYSTEM

RESISTORS WITH BLACK BODY COLOR ARE COMPOSITION, NON-INSULATED.
RESISTORS WITH COLORED BODIES ARE COMPOSITION, INSULATED.
WIRE-WOUND RESISTORS HAVE THE 1ST DIGIT COLOR BAND DOUBLE WIDTH.

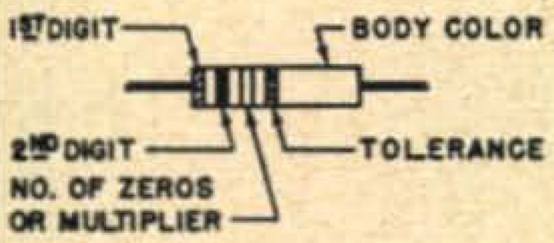

BODY, TIP, DOT OR NARROW BAND SYSTEM

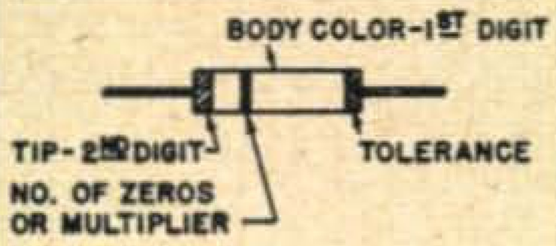

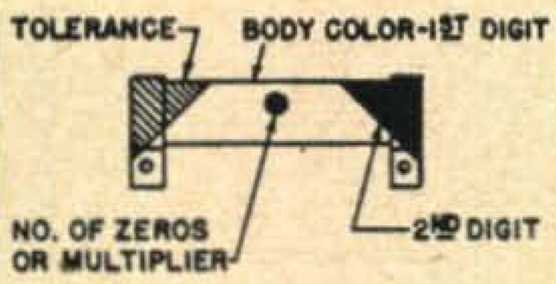

EXAMPLE–
BROWN-GREEN-RED = 1500Ω ± 20%

CAPACITORS, MOLD. MICA

ALL AXIAL LEAD MICA CAPACITORS HAVE A VOLTAGE RATING OF 300 TO 500 VOLTS. THE MAXIMUM CAPACITY OBTAINABLE IS 10,000 μμf.
THE COLOR CODE GIVES THE CAPACITY IN μμf.

RMA 6 DOT SYSTEM

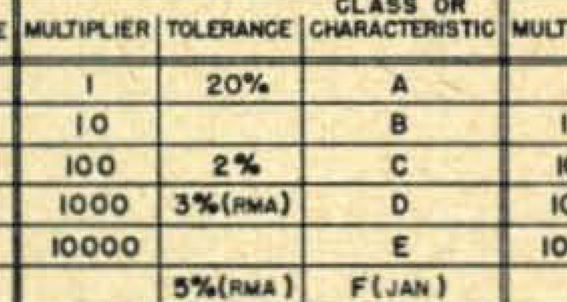

CLASS WAS PREVIOUSLY VOLTAGE.

BUTTON SILVER MICA

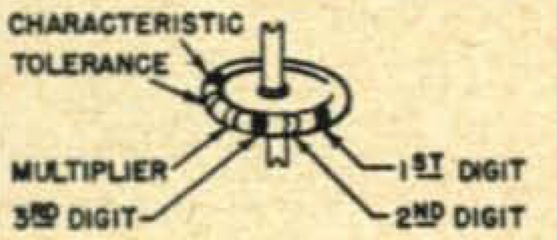

JAN 6 DOT SYSTEM

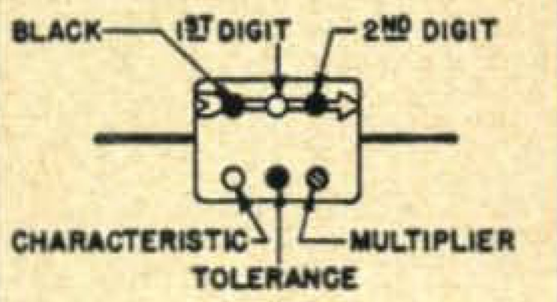

EXAMPLE – RMA 6 DOT
WHITE-ORANGE-BLUE } 360 μμf ± 2%
WHITE— RED—BROWN } CLASS J

CAPACITORS, MOLD. PAPER

VOLTAGE RATINGS IN HUNDREDS OF VOLTS. ONE COLOR BAND EMPLOYED FOR RATINGS UNDER 1000 VOLTS.
THE COLOR CODE GIVES THE CAPACITY IN μμf.

BAND SYSTEM

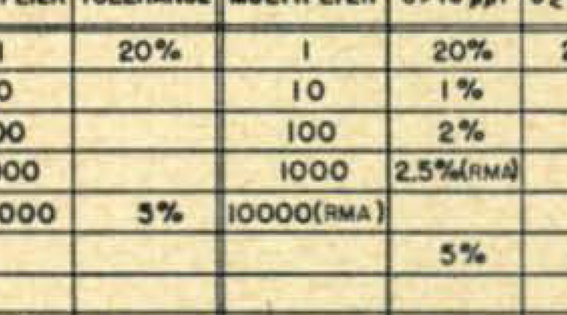

DOT SYSTEM

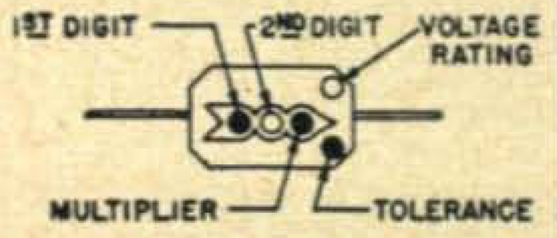

ARROW POINTS TO OUTER FOIL END

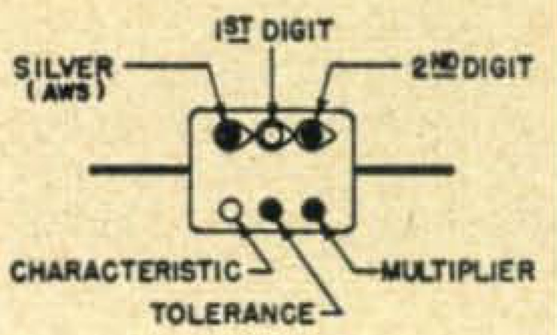

EXAMPLE –
RED-GREEN-ORANGE-BLACK-BROWN-RED
25000 μμf ± 20% 1200 Volts

CAPACITORS, CERAMIC

ALL TUBULAR CERAMIC CAPACITORS ARE RATED AT 500 VOLTS.
THE COLOR CODE GIVES THE CAPACITY IN μμf.

MOLDED INSULATED



NOTE– DO NOT CONFUSE WITH RESISTORS. FIVE COLOR BANDS USED, (ONE BROAD, FOUR NARROW), WHILE RESISTORS USE FOUR BANDS.

STANDOFF CERAMIC

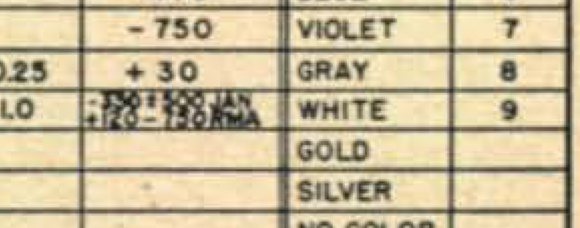

DIPPED PHENOLIC INSULATED OR NON-INSULATED

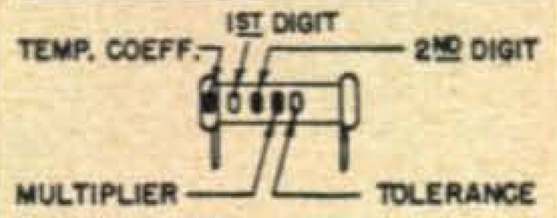

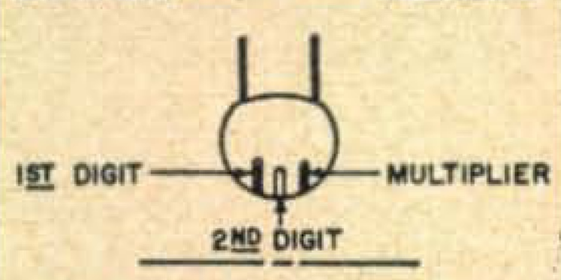

HI-CAPACITY CERAMIC TYPE (NOT TEMPERATURE COMPENSATED)

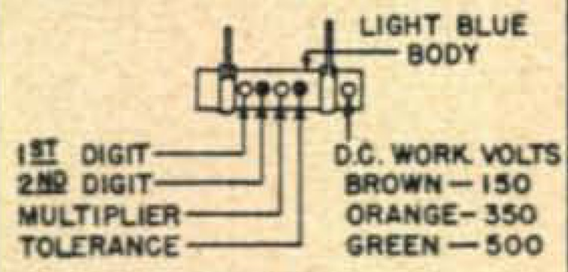

EXAMPLE–
BROWN-BLACK-ORANGE = 10000 μμf

(T-1540) (Date – 5/9/49)

Chart produced courtesy of RMC.

HAM TIPS

A PUBLICATION OF THE RCA TUBE DIVISION

Vol. 14, No. 2 July-August, 1954

Components for Pi-Coupled Amplifiers

By

Mack Seybold,* W2RYI

Most of the references on this subject present data for the determination of values of the components for pi-coupled amplifiers in terms of curves or formulas. To simplify the design procedure for the amateur, W2RYI has compiled this data in easy-to-use tabular form.

The use of a pi network to couple the plate of an rf amplifier tube to the antenna provides several advantages over the use of a conventional parallel-tuned, inductively-coupled tank circuit. The ease with which a multiband transmitter employing a pi-network tank circuit with rotary or tapped coils can be operated on several bands, in addition to its harmonic-attenuation feature, has made this circuit appealing to designers of amateur transmitters. The circuit is also popular because front-panel controls can be used to compensate for reasonably large variations in transmission-line reactance.

The function of the pi network is to match a transmission line having relatively low characteristic impedance to the plate of a tube which must "see" a relatively high resistive load to produce optimum power output. *Table I* lists the estimated plate loads for the various operating conditions of several popular tubes used in amateur transmitters. To determine the plate load for a given tube type, refer to *Table I* and select the operating condition that most closely fits your requirements; the estimated plate-load value for that operating condition is given in the last column in the table. The exact load for tubes not listed in *Table I* can be determined from a set of complicated calculations; however, a good approximation can be made with the formula:

$$\text{Estimated Plate Load (ohms)} = \frac{E_b}{2I_b}$$

where E_b is the plate supply voltage, and I_b is the dc plate current in ma.

The estimated plate load is then used as the key to *Table II*. This table lists the actual values of the pi-network components for the estimated plate loads; *Fig. 1* shows the location of these components in the circuit.

Example

An RCA 6146 is to be used in a 7-Mc, cw transmitter with 750 volts on the plate, and the signal is to be fed to a 50-ohm, coaxial line. *Table I* shows the estimated plate load to be 3,100 ohms. As shown in the 3,000-ohm column of *Table II*, 7-Mc operation requires 90 $\mu\mu$f for C_1, 6.2 μh for L, and 700 $\mu\mu$f for C_2.

When a 50-ohm, non-reactive load is applied to the coax output connector, optimum loading at 7 Mc will occur with components

*RCA Tube Div., Harrison, N. J.

approximating the above values. In a practical transmitter, a capacitor of 1,000 $\mu\mu$f should be used for C_2 so that the loading can be reduced when desirable, and so that compensation can be made for variations in antenna reactance. Capacitor C_1 should be capable of tuning through resonance at 7 Mc; all variations in reactance considered, a capacitance of 150 $\mu\mu$f would be considered to be a safe design value for C_1.

Recommendations

Design and constructional details for pi-coupled finals are amply covered in the articles listed in the accompanying bibliography. These articles should be examined thoroughly for ideas and suggestions before construction is begun.

In addition to the many valuable suggestions in the literature on the design of multiband rigs using pi-coupled finals, there are two precautions to be observed: (1) The driver should be a straight-through amplifier employing a conventional tuned tank circuit. (2) The final amplifier should not be operated as a doubler. These recommendations are important because the pi-coupled amplifier, in addition to attenuating harmonics effectively, will pass signals at frequencies below the fundamental more readily than an amplifier employing a parallel-resonant plate circuit. If the low-frequency signals from preceding multiplier stages are not permitted to reach the control grid of a pi-coupled final amplifier, successful operation will be assured.

Table I

Estimated Plate Loads for Typical Operating Conditions

Tube Type	Service	Emission	E_b	E_{c_2}	I_b	P_o	Plate Load
			volts	volts	ma	watts	ohms
813	ICAS	CW	2,250	400	220	375	5,100
	CCS	CW	2,000	400	180	275	5,500
	CCS	CW	1,500	300	180	210	4,200
	ICAS	Phone	2,000	350	200	300	5,000
	CCS	Phone	1,600	300	150	180	5,300
813's (Parallel)	ICAS	CW	2,250	400	440	750	2,600
	ICAS	Phone	2,000	350	400	600	2,500
807	ICAS	CW	750	250	100	54	3,700
	CCS	CW	600	250	100	40	3,000
	CCS	CW	500	250	100	32	2,500
	ICAS	Phone	600	300	100	44	3,000
	CCS	Phone	475	250	83	28	2,900
807's (Parallel)	ICAS	CW	750	250	200	108	1,900
	ICAS	Phone	600	300	200	88	1,500
6146	ICAS	CW	750	160	120	70	3,100
	ICAS	CW	600	180	150	66	2,000
	CCS	CW	600	150	112	52	2,600
	ICAS	Phone	600	150	112	52	2,600
	CCS	Phone	475	135	94	34	2,600
812-A*	ICAS	CW	1,500	—	173	190	4,300
	CCS	CW	1,250	—	140	130	4,500
	ICAS	Phone	1,250	—	140	130	4,500
	CCS	Phone	1,000	—	115	85	4,300
4-65A**	CCS	CW	1,500	250	150	170	5,000
	CCS	CW	600	250	140	54	2,100
	CCS	Phone	1,500	250	120	145	6,200
	CCS	Phone	600	250	117	50	2,500
4-125A/4D21	CCS	CW	2,500	350	200	375	6,200
	CCS	CW	2,000	350	200	275	5,000
	CCS	Phone	2,000	350	150	225	8,200
	CCS	Phone	2,500	350	152	300	6,700
4-250/5D22	CCS	CW	3,000	500	345	800	4,300
	CCS	CW	2,500	500	300	575	4,100
	CCS	Phone	3,000	400	225	510	6,700
	CCS	Phone	2,500	400	200	375	6,200
2E26	ICAS	CW	600	185	66	27	4,500
	CCS	CW	500	185	60	20	4,200
	ICAS	Phone	500	180	54	18	4,600
	CCS	Phone	400	160	50	13.5	4,600

*Grid Neutralization

**Typical operating conditions at higher plate voltages are published, but plate impedances are too high for convenient pi-network operation.

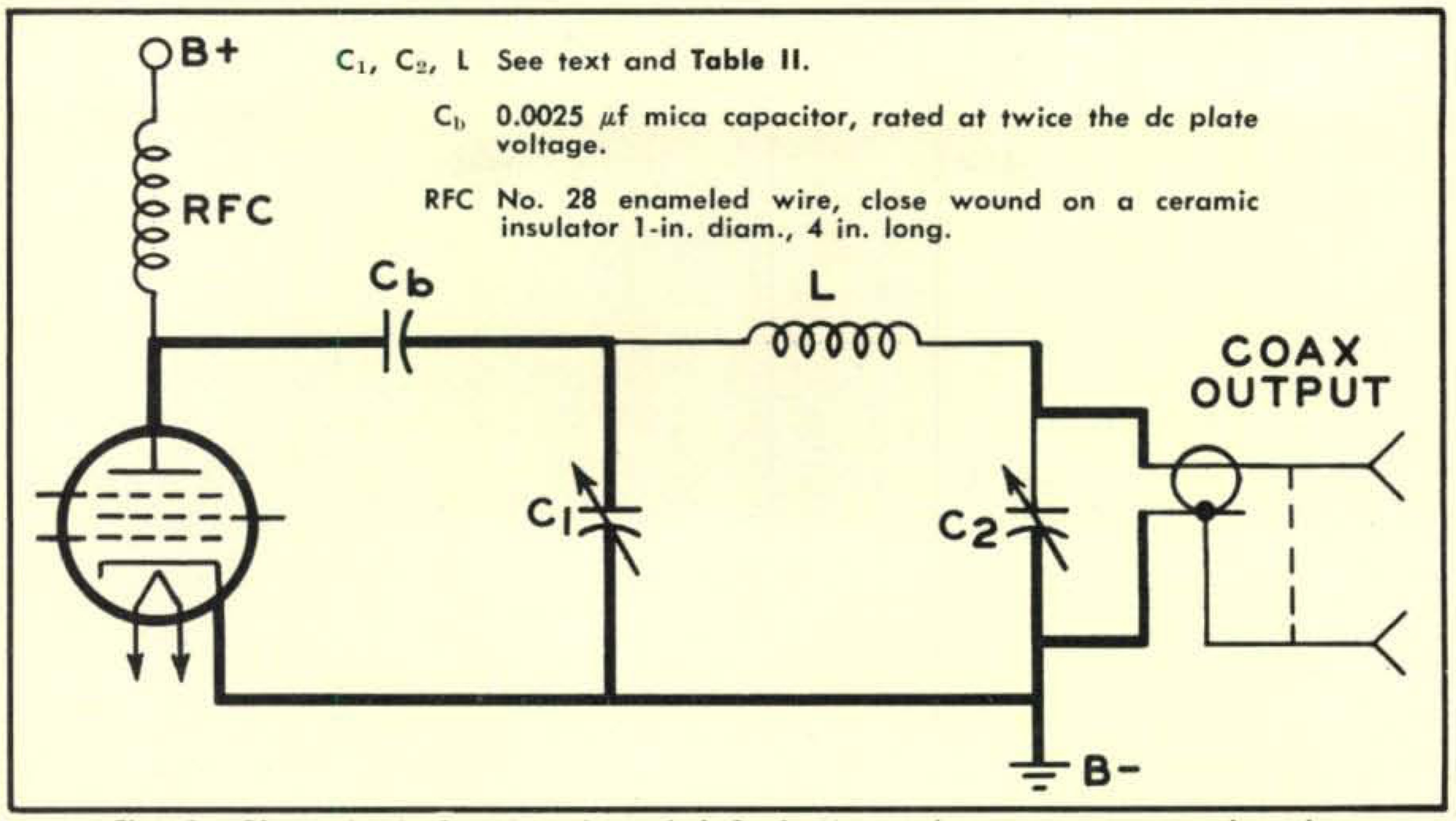

C_1, C_2, L See text and **Table II.**

C_b 0.0025 μf mica capacitor, rated at twice the dc plate voltage.

RFC No. 28 enameled wire, close wound on a ceramic insulator 1-in. diam., 4 in. long.

Fig. 1. Plate circuit for the pi-coupled final. Mount the components so that the connections and "chassis" paths, shown as heavy lines, will be as short as possible.

Table II Components for Pi-Coupled Final Amplifiers*

Estimated Plate Load (ohms)		1,000	1,500	2,000	2,500	3,000	3,500	4,000	4,500	5,000	6,000*	NOTES
C_1 in $\mu\mu$f,	3.5 Mc	520	360	280	210	180	155	135	120	110	90	The actual capacitance setting for C_1 equals the value in this table minus the published tube output capacitance. Air gap approx. 10 mils/100 v E_b.
	7	260	180	140	105	90	76	68	60	56	45	
	14	130	90	70	52	45	38	34	30	28	23	
	21	85	60	47	35	31	25	23	20	19	15	
	28	65	45	35	26	23	19	17	15	14	11	
L in μh,	3.5 Mc	4.5	6.5	8.5	10.5	12.5	14	15.5	18	20	25	Inductance values are for a 50-ohm load. For a 70-ohm load, values are approx. 3% higher.
	7	2.2	3.2	4.2	5.2	6.2	7	7.8	9	10	12.5	
	14	1.1	1.6	2.1	2.6	3.1	3.5	3.9	4.5	5	6.2	
	21	0.73	1.08	1.38	1.7	2.05	2.3	2.6	3	3.3	4.1	
	28	0.55	0.8	1.05	1.28	1.55	1.7	1.95	2.25	2.5	3.1	
C_2 in $\mu\mu$f,	3.5 Mc	2,400	2,100	1,800	1,550	1,400	1,250	1,100	1,000	900	700	For 50-ohm transmission line. Air gap for C_2 is approx. 1 mil/100 v E_b.
	7	1,200	1,060	900	760	700	630	560	500	460	350	
	14	600	530	450	380	350	320	280	250	230	175	
	21	400	350	300	250	230	210	185	165	155	120	
	28	300	265	225	190	175	160	140	125	115	90	
C_2 in $\mu\mu$f,	3.5 Mc	1,800	1,500	1,300	1,100	1,000	900	800	720	640	500	For 70-ohm transmission line.
	7	900	750	650	560	500	450	400	360	320	250	
	14	450	370	320	280	250	220	200	180	160	125	
	21	300	250	215	190	170	145	130	120	110	85	
	28	225	185	160	140	125	110	100	90	80	65	

* Values given are approximations. All components shown in Table II are for a Q of 12. For other values of Q, use $\frac{Q_a}{Q_b} = \frac{C_a}{C_b}$ and $\frac{Q_a}{Q_b} = \frac{L_b}{L_a}$. When the estimated plate load is higher than 5,000 ohms, it is recommended that the components be selected for a circuit Q between 20 and 30.

Bibliography

1. "Pi-Network Calculator," Bruene, **Electronics**, May, 1945.
2. "Pi-Network Tank Circuits," Pappenfus and Klippel, **CQ**, Sept., 1950.
3. "Further Notes on Pi and L Networks," Pappenfus and Klippel, **CQ**, May, 1951.
4. "Practical Applications of Pi-Network Tank Circuits for TVI Reduction," Grammer, **QST**, Jan., 1952.
5. "Pi-Network Design Curves," Grammer, **QST**, April, 1952.
6. "Pi-Network Tank Circuits for High Power," Grammer, **QST**, Oct., 1952.
7. "A Wide-Range, High-Power, Pi-Network Final," Farrar, **QST**, Oct., 1953.
8. "Simplified Pi-Network Solutions," Hoefer, **CQ**, Nov., 1953.

NEW RCA TYPE 80

The RCA type 80 full-wave vacuum rectifier was recently changed over from a size ST-14 bulb to a T-9 bulb, like that used for the 5Y3-GT. This was done in order to utilize RCA's modern tube manufacturing techniques and equipment more effectively, despite declining replacement demand for the type 80.

The basing connections as well as all electrical characteristics and ratings remain unchanged in the new design. Since the new bulb size is smaller than the old one, this new type 80 can be installed in all sockets where the old 80 was used.

This short article shows just why it is that when the impedance of the input and the output match then there is a maximum of power transfered and the best results are obtained from—Say, a loudspeaker. Somehow this important factor is not explained very well in most articles on hi-fi as well as loudspeaker installations and this frequently results in very unsatisfactory installations.

the Impedance Match

George P. Pearce
1809 Richmond Drive, N.E.
Albuquerque, New Mexico

Why should the impedance of the output transformer secondary match the voice coil impedance?

Answer: *in order to get the best volume from a speaker or maximum results from any other electronic circuit where an impedance match is required.* In the first place an impedance match is generally for the purpose of transferring the maximum power to another circuit. But again, why does it happen that the maximum power in the connected circuit is developed when the two impedances just match? Let's find out: Suppose, for example that there is an audio transformer and across the secondary of this transformer there is developed 5 volts and the impedance of the winding is 10 ohms. We wish to connect this output to the voice coil of a loud speaker. What should be the impedance of the voice coil to receive the most power from the transformer secondary?

Without going into a lot of theory let us calculate the wattage a voice coil of 2 ohms impedance would receive: To start with we have 5 volts generated in the transformer secondary and we have a total of 10 ohms plus 2 ohms or a total impedance of 12 ohms in the circuit. The 5 volts across 12 ohms will cause 5/12 or 0.416 amperes to circulate which, of course, will be the flow of current in the voice coil. A current of .416 amperes flowing through a resistance of 2 ohms gives a power in the circuit of $.416^2$ x 2, or .347 watts; so much for a 2 ohm voice coil. Perhaps a coil with more turns in it would provide more power and a check on a 4 ohm coil shows it would give .511 watts. This is better but we do not know if this is the best so let us make a tabulation of a lot of various voice coils as follow:

Z_1	Z_2	Watts.
2	12	.347
4	14	.511
6	16	.586
8	18	.618
10	20	.625
12	22	.620
14	24	.607
16	26	.591
18	28	.573
20	30	.556

Where Z_1 is impedance of voice coil.
Where Z_2 is total impedance of circuit.

Formula

$$\text{Watts} = Z_1\left(\frac{5}{Z_2}\right)^2$$

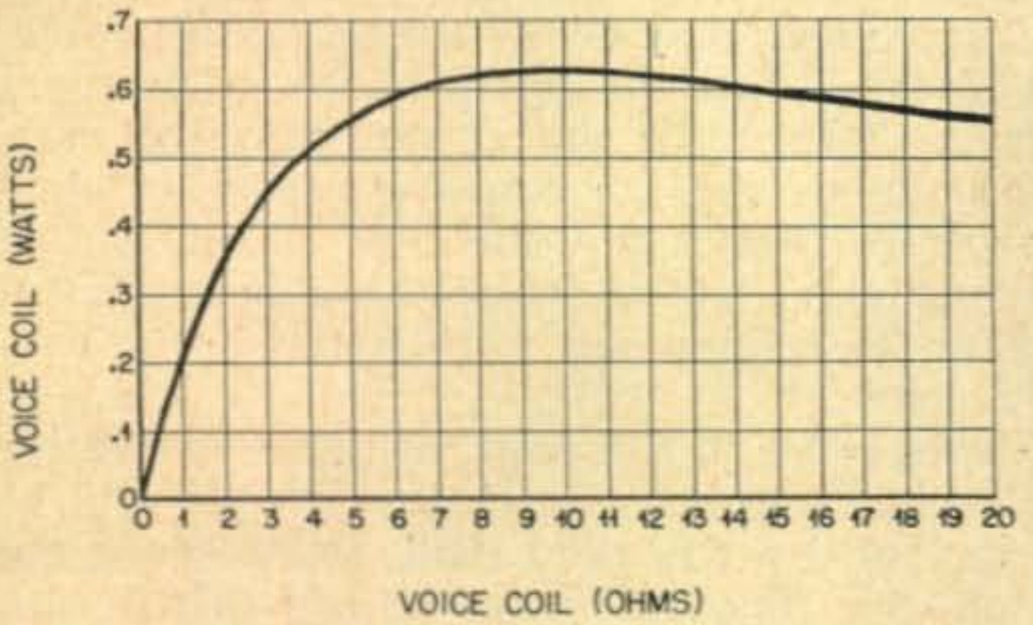

The greatest power transfer is obviously when the impedance of the voice coil is 10 ohms, and now notice that this is the condition when the impedance of the output circuit is matched by the impedance of the input circuit of the voice coil, that is, they are both 10 ohms and this is called the impedance match—for the output and the input both "see" the same impedance.

A plot of the above tabulation is shown and the match doesn't have to be perfect as a little mismatch on either side of the exact figure won't change the wattage seriously, but the exact match should be aimed for. ■

Matching the Speaker to the Output Tube

The Design and Operation of the Output Transformer

By J. M. Thomson*

In usual audio-frequency power amplifier practice, too little attention is paid to the output coupling device between the output tube or tubes and the speaker. It often occurs that the otherwise good design of an amplifier is nullified by improper coupling between the output and the reproducer. Mr. Thomson points out the considerations involved and supplies practical data for the design of satisfactory coupling transformers for both magnetic and dynamic types of speakers. — EDITOR.

DUE to the extended use of power tubes with magnetic and dynamic types of speakers, the use of output transformers to match the speaker to the tube has become of vital importance. "Magnetic" is here used in referring to permanent magnet moving armature types of speakers, while "dynamic" is used in referring to moving coil inertia controlled types. The following paper gives a general idea of the operation of output transformers.

The standard connection for an output transformer with a power tube and speaker is given in

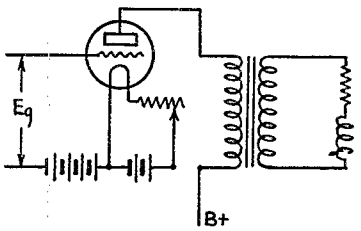

FIG. 1. — TYPICAL CIRCUIT FOR POWER TUBE WITH TRANSFORMER COUPLING TO THE SPEAKER

Fig. 1. Fig. 2 gives the equivalent connection as far as a.c. voltages and currents are concerned. Using Kirchoff's Laws and the symbolic method, the current in the speaker can be developed in terms of the tube, speaker and transformer constants. The formula for the speaker current, I_2, is

$$I_2 = \frac{\omega M E}{\sqrt{(R_1R_2 - X_1X_2 + \omega^2M^2)^2 + (R_2X_1 + R_1X_2 + R_1X)^2}} \quad (1)$$

Where

$\omega = 2 \times 3.14 \times$ frequency in cycles per second.

M = mutual inductance in henries.

E = a.c. voltage applied to the grid of the power tube, multiplied by the amplification factor of the tube.

R_1 = total resistance in the primary circuit in ohms.
= plate resistance of the tube plus the primary resistance of the transformer.

R_2 = total resistance of the secondary circuit of the transformer.
= resistance of the speaker plus the resistance of the secondary coil of the transformer.

X_1 = reactance of the primary coil of the transformer.

X_2 = reactance of the secondary coil of the transformer.

X = reactance of the speaker.

In a good transformer with the usual values of leakage inductance,

$$\omega^2M^2 = X_1X_2$$
$$\omega M = nX_1$$
$$X_2 = n^2X_1$$

Therefore:

$$I_2 = \frac{nX_1E}{\sqrt{(R_1R_2 - X_1X)^2 + (R_2X_1 + R_1n^2X_1 + R_1X)^2}} \quad (2)$$

The power input to the speaker is I_2^2r and for "r" a constant will be a maximum when I_2 is a maximum. A little experimenting with Formula 2 will show that the values which affect I_2 the most are the primary reactance, X_1, and the turn

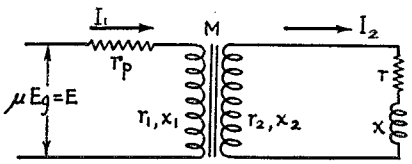

FIG. 2. — EQUIVALENT CIRCUIT OF THAT SHOWN IN FIG. 1

ratio, "n." The primary and secondary resistance affect the current, I_2, but not very markedly.

The following tabulation shows the effect of changing the primary impedance of an output transformer:

* Ferranti Electric, Ltd., Montreal, P. Q., Canada.

MAGNETIC SPEAKER AT 50 CYCLES

Tube impedance	2000 ohms
Speaker resistance	1500 ohms
Primary resistance	1000 ohms
Secondary resistance	1000 ohms
Speaker impedance at 50 cycles	1950 ohms
Turn ratio	1/1
Amplification factor of tube	3.5
R.M.S. a.c. voltage on grid of tube	20 volts

Primary Impedance in Ohms	Secondary Impedance in Ohms	Speaker Current in Mills	Power Input to Speaker in Milliwatts
2000	2000	8.16	104
4000	4000	10.8	175
15,000	15,000	12.1	220
Infinite	Infinite	12.4	232

DYNAMIC SPEAKER AT 50 CYCLES

Tube impedance	2000 ohms
Speaker resistance	5 ohms
Primary resistance	1000 ohms
Secondary resistance	1 ohm
Speaker impedance at 50 cycles	5 ohms
Turn ratio	20/1
Amplification factor of tube	3.5
R.M.S. a.c. voltage on grid of tube	20 volts

Primary Impedance in Ohms	Secondary Impedance in Ohms	Speaker Current in Mills	Power Input to Speaker in Milliwatts
2000	4.5	205	210
4000	9.75	244	296
15,000	37.5	260	340
Infinite	Infinite	260	340

With both types of speaker the current increases as the primary impedance is increased. In the magnetic type, when the primary impedance is changed from 2000 to 15,000 ohms, the speaker current increases 46%, giving 112% increased power. With the dynamic speaker the current input increases 27% with a gain in speaker power of 62%. The power input for the condition of infinite primary impedance is the theoretical maximum power input to the speaker.

Figs. 3 and 4 show the power input to magnetic and dynamic speakers when the turn ratio (n) is varied. In the magnetic type the power input decreases with increasing frequency. This corrects for the characteristics of the speaker and helps to give a more uniform response. These curves also show that with this type of speaker it is possible to change radically the balance between high and low notes by changing the turn ratio.

The results for a dynamic speaker are similar, but the power input for a perfect speaker is almost independent of frequency. The loss in power at the lower frequencies is due to reduction of the primary reactance with frequency, and consequently the frequency should be carefully chosen so as to give the best possible balance between low and high frequency notes. A transformer with a primary inductance of 40 to 50 henries would give practically a flat curve. The primary inductance should be measured with direct current (equal to the normal plate current) flowing in the coil. The voltage to be used in making the inductance measurement should be

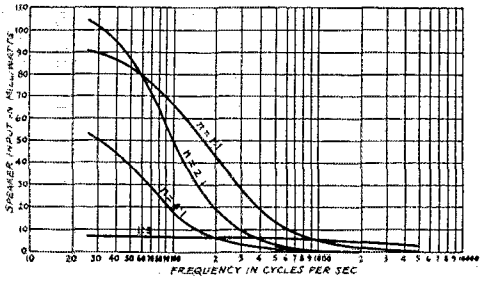

FIG. 3. — POWER INPUT PLOTTED AGAINST FREQUENCY AT VARIOUS VALUES OF TURN RATIO, MAGNETIC TYPE SPEAKER

Plate impedance	*5000 ohms*
Primary Resistance	*500 ohms*
Secondary Resistance	*500 ohms*
Speaker Resistance	*1000 ohms*
Primary Inductance	*60 henries*
Secondary Inductance	*60/n^2 henries*
Speaker Inductance	*6 henries*
Amplification factor	*7*

10 volts (r.m.s.) impressed on grid of tube "n" is the ratio of primary turns to secondary turns

equal to the a.c. voltage that will be impressed on the coil when operating under normal conditions. The inductance should also be measured at a number of frequencies in the audible range to get the effect of the self-capacities of the primary and secondary coils. For example, a UX-171-A tube has an amplification factor of 2.5 and a plate current of 20 mills at 180 volts "B" and −40 volts grid bias. It is assumed that experiments will be made using a 15-volt (r.m.s.) grid swing on the 171-A; then the inductance measurements should be made with 20 mills d.c. in the primary coil and an a.c. voltage of $2.5 \times 15 = 37.5$ volts. When used in a receiver the grid swing on the output tube will vary over a wide range. In this case the worst condition is assumed and an a.c. voltage of 1 to 2 volts would be used.

The correct value of "n" for a given set of conditions can be obtained mathematically by differentiating Equation 2, using "n" as the variable and then solving for "n." If this is done it will be found that

$$n^2 = \sqrt{1+\frac{R_1^2}{X_1^2}} \times \sqrt{\frac{R_2^2+X^2}{R_1^2}}$$

for maximum power input. If the primary reactance is very large as compared with the total resistance in the primary circuit,

$$\frac{R_1^2}{X_1^2} = 0 \text{ and } n^2 = \sqrt{\frac{R_2^2+X^2}{R_1^2}}$$

This is the commonly used impedance ratio formula. Two things must be noted about this

formula. First, R_1 is equal to the plate resistance of the tube plus the resistance of the primary coil and R_2 is equal to the resistance of the speaker plus the resistance of the secondary coil. Second, the turn ratio is not independent of frequency unless speaker reactance is zero. This means that generally it is only possible to set the conditions to give the maximum power input at one frequency.

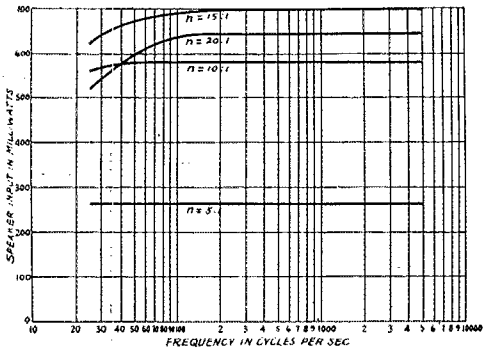

FIG. 4. — POWER INPUT PLOTTED AGAINST FREQUENCY AT VARIOUS VALUES OF TURN RATIO. DYNAMIC TYPE SPEAKER

Plate impedance	*2000 ohms*
Primary resistance	*500 ohms*
Secondary resistance	*1 ohm*
Speaker resistance	*10 ohms*
Primary Inductance	*20 henries*
Secondary inductance	*20/n² henries*
Speaker inductance	*0 henries*
Amplification factor	*8.5*

25 volts (r.m.s.) impressed on grid of tube
"n" is the ratio of primary to secondary turns

It is apparent from these considerations that the power input to the speaker, and consequently the tone quality, can be changed by varying the value of the primary impedance to the turn ratio of the output transformer. To obtain the best results the primary inductance should be made as high as possible and the turn ratio chosen to give the maximum power input with the proper balance between the high and low tones. The resistance of the primary and secondary coils of the transformers should be kept as low as possible to keep the copper losses in the transformer small and the efficiency high. In magnetic speakers it will be found generally that if the ratio is chosen to give the maximum input between 40 and 60 cycles, good tone balance will be obtained. In dynamic speakers the turn ratio should be chosen to give the maximum input at the lowest frequency to be amplified.

The power input to a speaker is also affected to some extent by the leakage inductance and the self-capacitance of the primary and secondary coils. The leakage inductance is due to the fact that it is not physically possible to put two coils in the same place. This causes each coil to have some magnetic lines of flux which do not link with the turns in the other coil. As a result of this, each coil acts as though it had a small choke in series with it.

The net result is a reduction in power input to the speaker. The reduction in power varies with the frequency and the reduction is, in general, greatest at the higher frequencies. The overall tone quality of a set can be changed by the use of a high leakage transformer. For example, if the speaker has a response curve that rises at the higher frequencies, the use of a high leakage transformer will reduce the high frequency power input more than the low frequency input and the overall response will be more uniform. The leakage reactance will vary directly as the square of the number of turns in the coil, inversely as the length of the leakage path and directly as the width of the leakage path. The width of the leakage path depends on the width of the coils and the gap between the primary and secondary coils. The leakage inductance can be reduced by dividing the primary and secondary coils into a number of sections and interleaving the primary and secondary sections. Fig. 6 shows a primary coil interleaved between two sections of secondary winding.

A capacity effect is obtained whenever two conductors separated by a dielectric have a voltage impressed on them. If the surface area of the conductors is small and the distance between them large, the capacity will be small, although this small capacity may be large enough to become an important factor at high frequencies. In transformer coils a voltage is induced between turns and between layers. The surface of the conductors is small, but the spacing is also small and the self-capacity may be appreciable. The result is equivalent to an infinite number of condensers in series and in parallel. As a first approximation this capacity is usually represented as a small condenser shunted across the coils. In the output transformer the capacity is

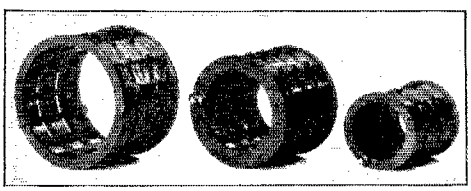

FIG. 5. — TRANSFORMER COIL WINDING DESIGNED FOR MINIMUM DISTRIBUTED OR SELF-CAPACITANCE

Since the dielectric is mostly air, its losses are low.

generally small and increases the power input to the speaker. If the self-capacity is increased to a large value it will eventually act as a short circuit and reduce the power input to the circuit.

Fig. 5 shows the construction of a coil which has been designed to keep the self-capacity low.

The coil is divided into sections and air is used as the principal insulation.

The question is: What limits must be set to the various quantities to arrive at a good commercial transformer? For example, the greater the impedance of the transformer, the greater the resistance and therefore the greater the losses in the transformer. However, the following values have been found to give very satisfactory results:

The primary reactance at the lowest frequency to be transmitted, usually 50 cycles, should be at least twice as large as the plate impedance of the tube. Ideal results will be obtained if the primary impedance is five times as large. The primary resistance of the secondary coil should be not greater than one-fifth of the speaker resistance in a magnetic speaker. For best results with a dynamic speaker the secondary resistance should be less than one-eighth to one-tenth of the speaker resistance. The speaker will, however, operate quite satisfactorily with a secondary resistance one-fifth of the speaker resistance. The leakage reactance of the transformer should be less than one-half of 1% unless the speaker response is to be corrected by the output transformer. The self-capacity of the primary coils should be made as small as possible.

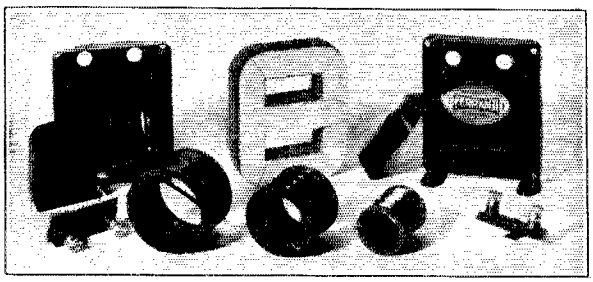

FIG. 6. — TRANSFORMER COILS WITH PRIMARY WINDING INTERLEAVED BETWEEN TWO SECTIONS OF SECONDARY WINDING

This method of assembly reduces leakage inductance.

The turn ratio of the transformer should then be calculated by the formulas given in the first part of the paper. Occasionally, because of the response curve of the speaker, the value of "n" for maximum power input is not the value which will give the best overall response curve. This can only be checked experimentally and a transformer with two or three taps in the secondary will be very useful in carrying out the test. In any case, the value of the turn ratio, "n," is not very critical, and it will generally be found that a variation of $\pm 25\%$ from the correct ratio will not affect the results very materially.

Accurate Wire Wound Resistors

THE use of B-battery substitutes has been responsible for many very good resistors being made available to the amateur within the past few years, and the description of another wire wound resistor might not seem worthwhile. But when one considers that the recently announced "Super Akra-Ohm" units are wire wound, non-inductive units, may be obtained in stock sizes of from 5000 ohms to 5,000,000 ohms, that the units are constructed to insure insulation to withstand undesirable atmospheric conditions, that they will dissipate 1 watt safely, and finally that they are available to within 1% plus or minus of their specified resistance, it seems that these units would be of interest to the amateur.

The units are constructed in "pies," the wire being wound in opposite directions in alternate pies so the resistor is practically non-inductive. They are provided with 8–32 terminal clips which permit quick experimental set-ups. The units are sufficiently small to be mounted in the usual grid leak mounting. The 6-M resistors are supplied to 1% plus or minus of their specified resistance but more accurate units may be obtained upon special order from the Shallcross Mfg. Co., Collingdale, Pa.

Strays

While visiting the General Electric Co. plant at Pittsfield, Mass., recently, we got to speculating about radio reception in and near Pittsfield. The high voltage laboratory has a five-million volt transformer together with its proper condensers and spark gaps, and when this equipment gets going —!

The cut label on page 18 of the October issue of *QST* had the designations of the coils L_2 and L_3 transposed. The coils with the greater number of turns should have been marked L_3.

Lightning struck W9BAN some time ago and rather thoroughly demolished the tubes, transformers, meters, relay, condensers, and welded the key contacts together.

Taylor's saying, "Lightning can't strike my antenna" should be made one of the famous last words.

A copy of 1929 (Volume XIII) *QST* index was sent loosely with a copy of December going to each subscriber. If you didn't get yours, please let us know and we will promptly forward one. Newsstand readers may obtain a copy of this index by sending us 4¢ in stamps.

KNOW

RICHARD E. NEBEL, W2DBQ-WLNB

NEXT TO THE VACUUM TUBE, one of the most widely used components in the radio, power and electronic fields is the indicating meter. In most cases, newcomers to the field of radio learn the use of meters long before their operating principles are understood. A discussion of the functions and capabilities of these instruments will lead to more intelligent applications in practical work. Wider use of a single instrument will be outlined, as well as design and component fabrication for a number of simple multi-meter circuits. Those connected with radio-electronic work come in contact with many different types of meters. Illustration *Fig. 1* shows how basic types are applied to a multiplicity of measurements. Some of these instruments will function in both alternating and direct-current circuits. Others are suitable for a.c. or d.c. only. One basic meter movement may be used for several purposes—the difference being in the external components, such as shunts, multipliers, rectifiers, thermocouples and transformers.

The D-C Vane Meter

This type of meter is not very accurate but it serves satisfactorily in some requirements. The d-c vane meter employs a permanent magnet. It is therefore polarized, and will indicate only when current flows through it in one direction, limiting its utility to direct current. The pointer (*Fig. 2*) is attached to a small, elliptical iron vane. The vane aligns itself with the magnetic flux between the poles of the magnet. When no current flows through the coil the pointer is at zero on the scale. As current flows through the coil in the proper direction, the fixed flux lines are distorted and revolve in a clockwise direction due to the

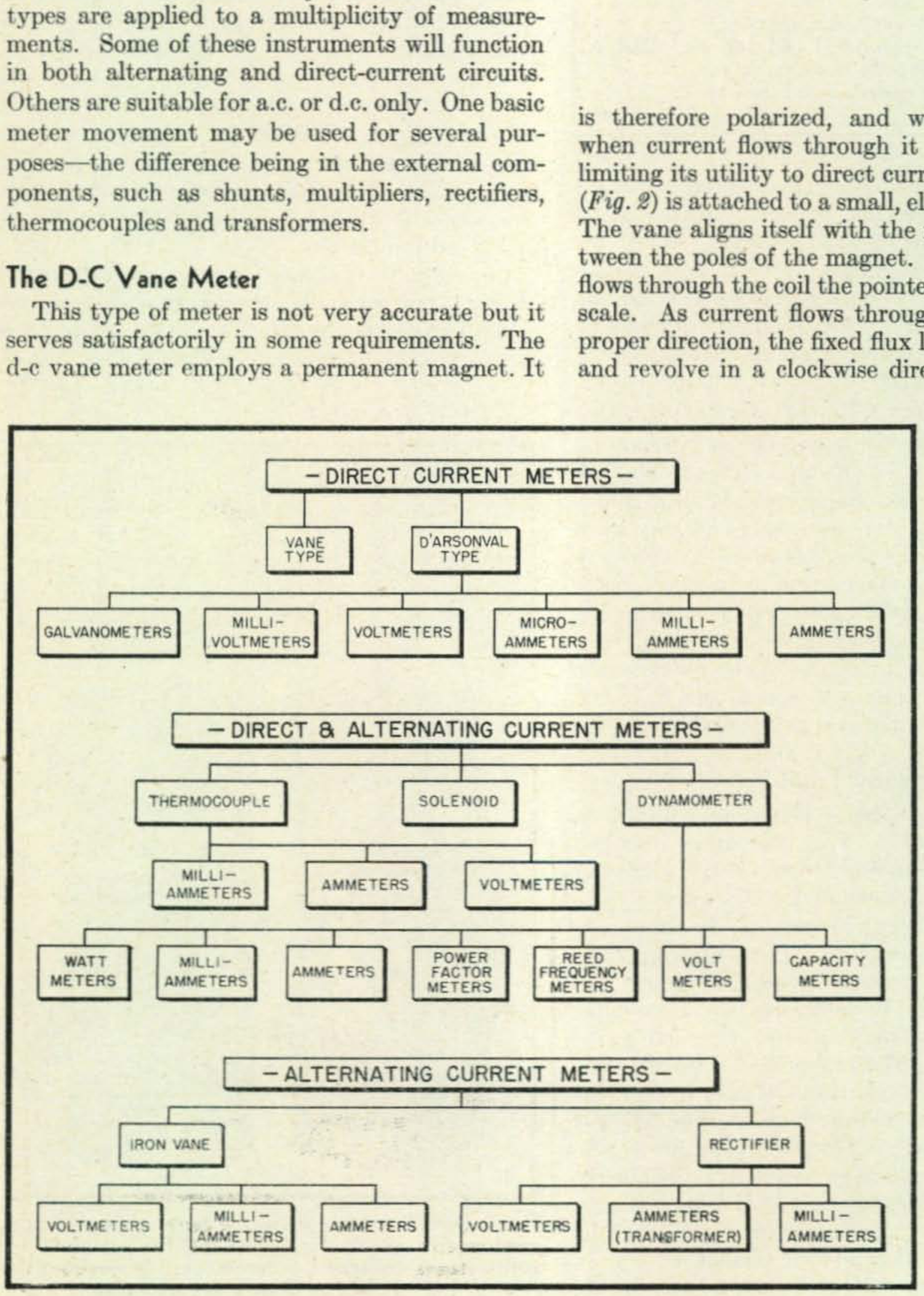

Fig. 1. The family tree of meters. Basic types of indicating instruments

YOUR METER

SHUNTS AND MULTIPLIERS MAKE A SINGLE METER A VERSATILE INSTRUMENT

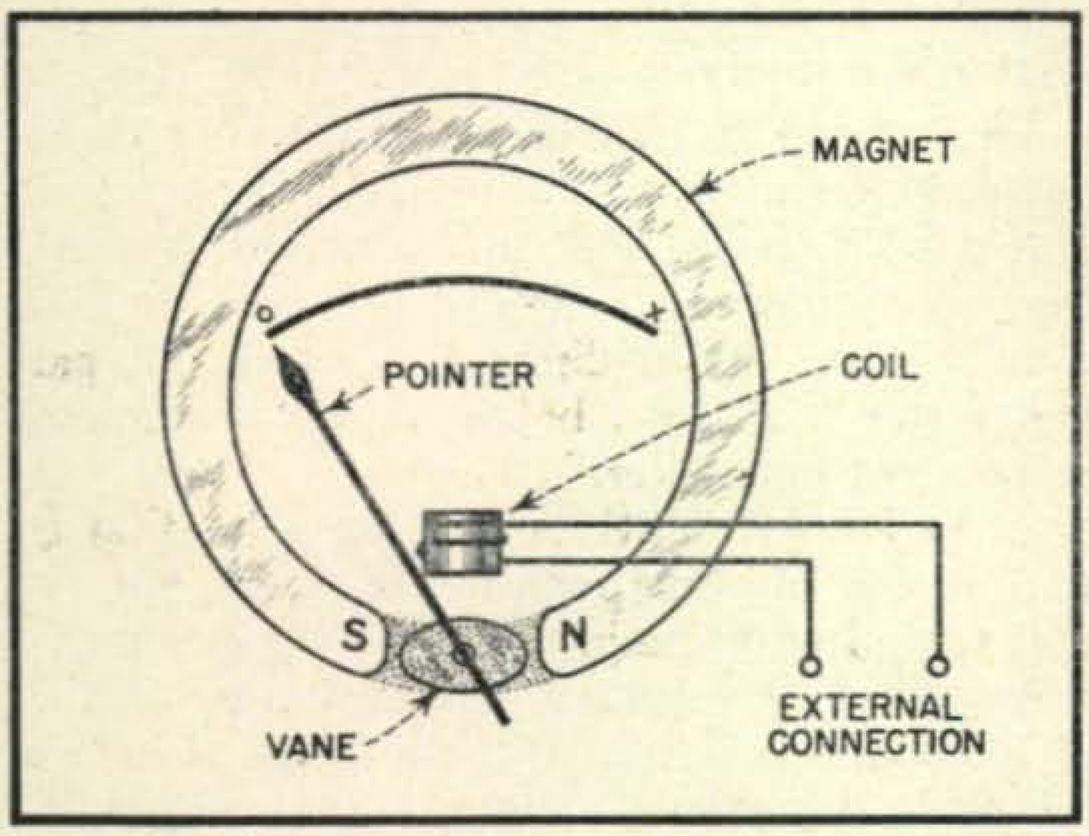

Fig. 2. Direct-current vane-type meter

interaction of the coil flux on the fixed field. The extent of this distortion is dependent on the strength of the coil field which in turn varies with the current flowing through it. The pointer will therefore move upscale as current flows through the coil, the degree of displacement depending directly upon the amount of current. The coil may consist of many turns (to obtain high impedance) if the meter is applied as a voltmeter, or of few turns if used as an ammeter. This type of meter is subject to considerable inaccuracy due to the magnet becoming weak with age or overloads.

The Solenoid Meter

Radio men are familiar with the inexpensive watch-case meter used for testing batteries, etc. This meter is not polarized, as it contains no permanent magnet, and is therefore suitable for both a-c and d-c measurements. The principle of operation is illustrated in *Fig. 3*. As current flows through the coil (solenoid), the soft iron vane is drawn in by magnetic attraction and the pointer moves across the scale, the spiral spring providing the restoring force. The number of turns and size of wire in the coil determine whether it is to be used as a voltmeter or ammeter. The meter may be constructed so as to serve both purposes, having two windings. A meter of the solenoid type, while not very accurate, is rugged and will stand a great deal of abuse.

The A-C Iron Vane Movement

In a-c power work, where sensitivity is not too important but accurate readings are required, the alternating-current vane meter serves very well (*Fig. 4*). Two soft iron vanes are employed, one stationary and the other attached to the pointer shaft. As current passes through the coil, the vanes are magnetized, the upper and lower ends of the two vanes always having the same polarity, regardless of the direction of current flow. As like poles repel, the moving vane is revolved on the shaft carrying the pointer. The restoring force is a spiral spring. A mechanical variation of this system uses two soft iron concentric segments instead of the flat vanes.

The D'Arsonval Meter

The D'Arsonval movement is the most ac-

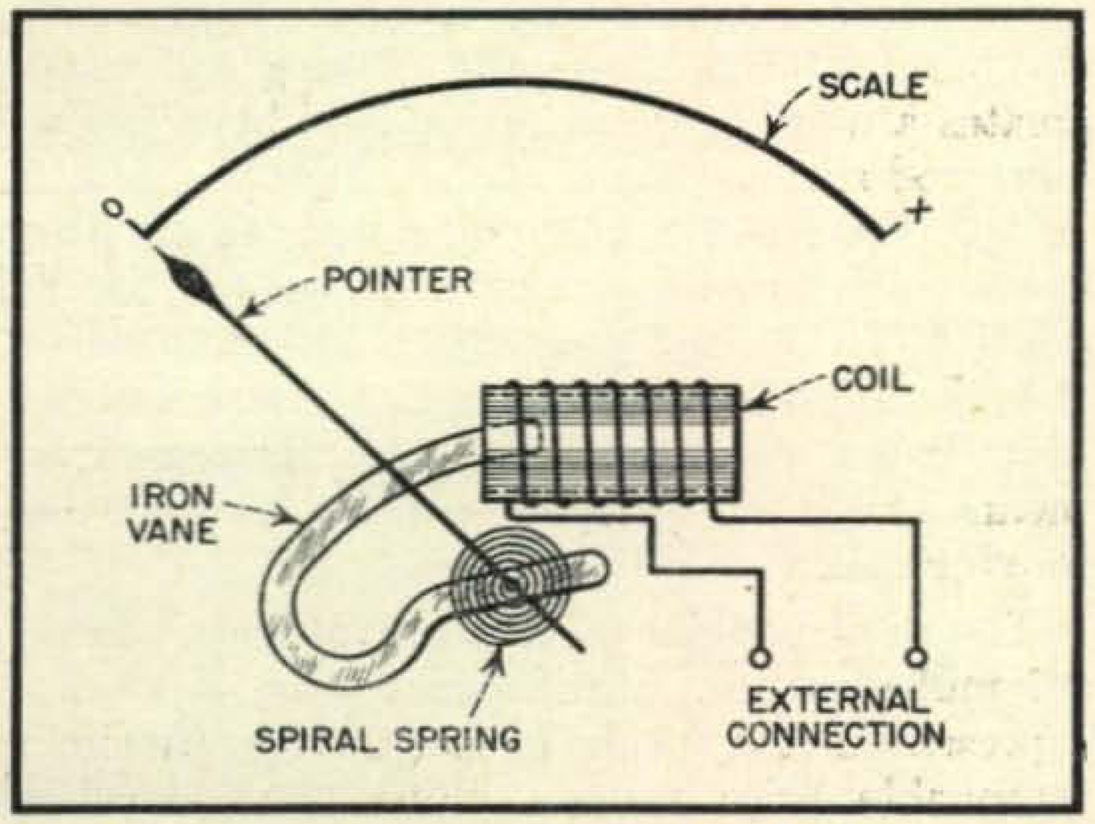

Fig. 3. The solenoid meter is used on both alternating current and direct current

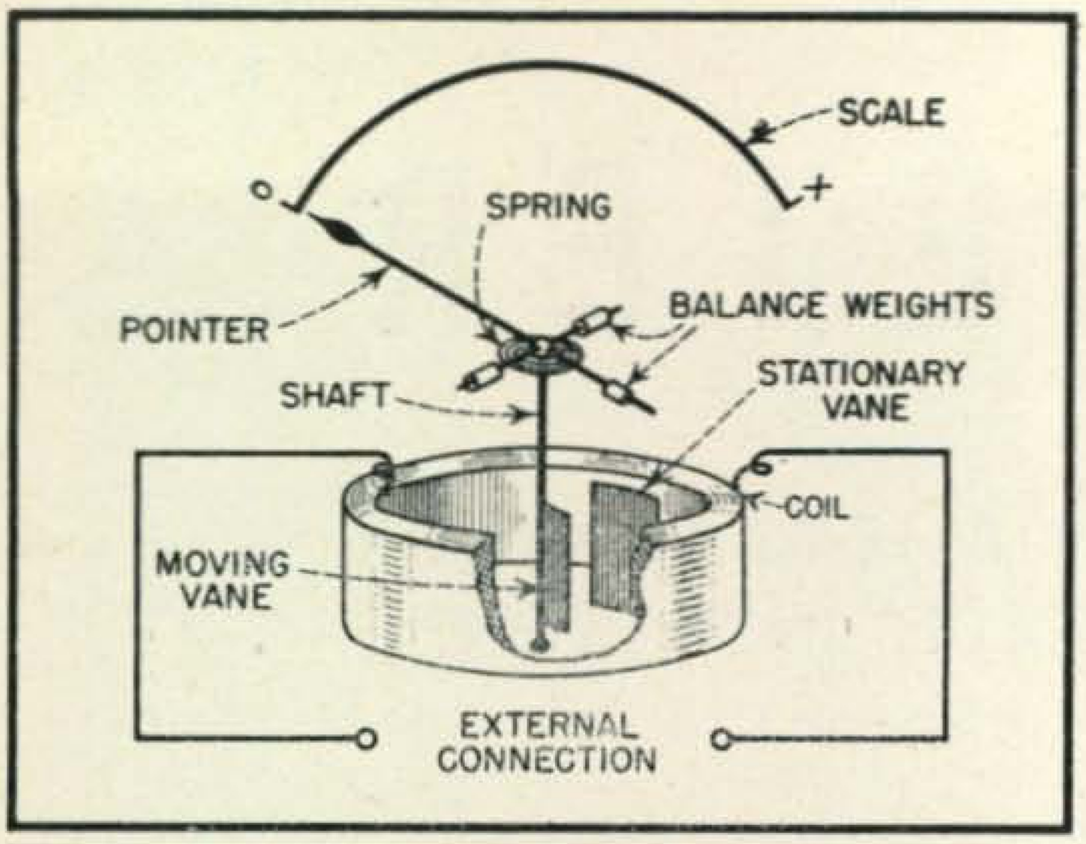

Fig. 4. Iron vane meter for alternating current applications

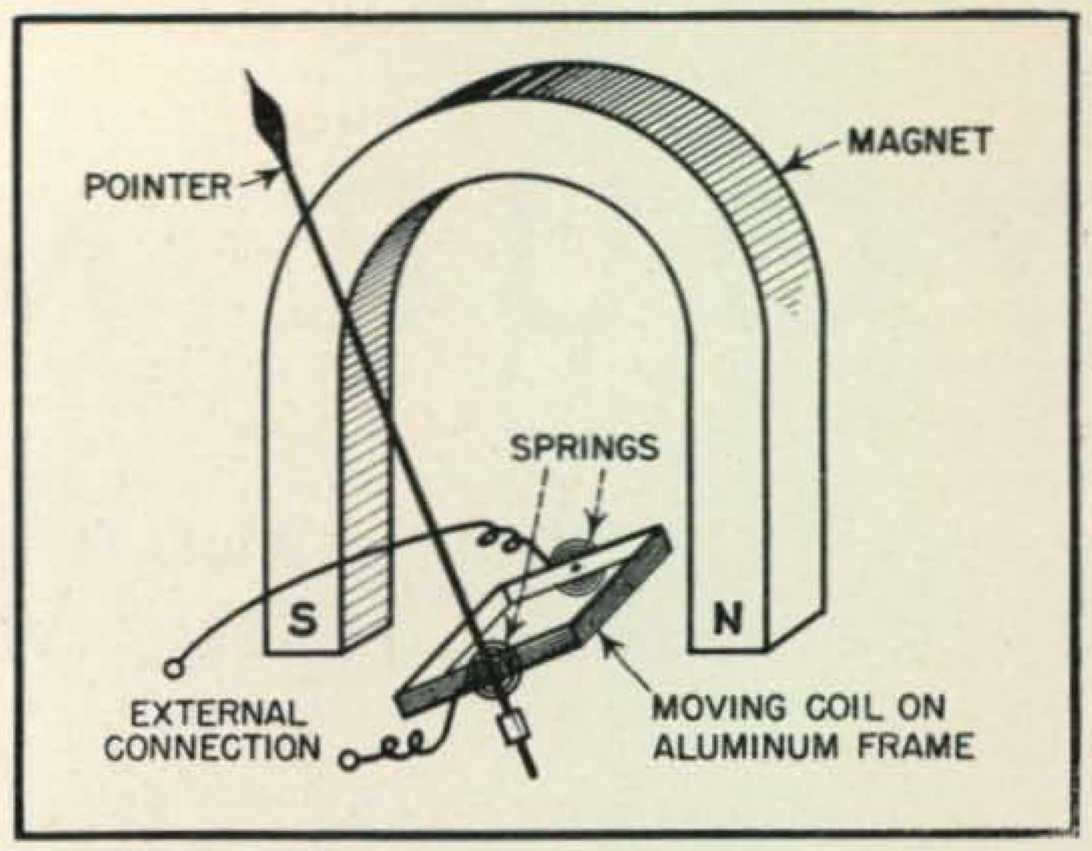

Fig. 5. The D'Arsonval meter is widely employed in d-c equipment

curate and sensitive of all types and is the meter in widest service. As it employs a permanent magnet for producing torque in the moving element, it is polarized and can therefore be used directly on d.c. However, a-c application is made possible by use of thermo-couples and rectifiers.

The basic principle and parts of the D'Arsonval meter are shown in *Fig. 5*. Torque is produced by the permanent magnet, acting on the field produced by current flowing through the moving coil. If the current flows through the coil in the proper direction, the coil assembly, to which the pointer is attached, will move in a clockwise direction. The restoring force is contributed by the two springs which also serve to carry the current to the moving coil. These springs must be precisely fabricated and matched in order to insure accuracy of the instrument. It will be noted that the pointer, attached to the moving coil frame, will come to rest at a point where the actuating magnetic force is balanced or equalled by the opposing force of the springs. Therefore the pointer will move farther for a given current if the springs are made weaker or if the magnetic force is made greater. The latter is accomplished by using a stronger magnet or increasing the number of turns on the moving coil which creates a more dense magnetic field by means of increased ampere-turns. To say that the pointer moves farther for a given current is to say that the sensitivity is increased. Inasmuch as the density of the fixed magnetic field is limited by the size and design of the magnet, the sensitivity of ordinary panel-type meters is increased by means of lighter springs and more turns on the moving coil.

The most popular of D'Arsonval meters is the 0-1 milliammeter. Until recent years this range represented the peak of sensitivity within a reasonable price range. Subsequent developments, however, have brought more sensitive micro-ammeters within the reach of all.

Meter Sensitivity

The sensitivity of indicating meters is designated by one of the following methods:

1. GALVANOMETERS: Current required for deflection of one scale division, each division usually being one millimeter in width. A galvanometer may thus be rated as "one microampere per millimeter."

2. VOLTMETERS: Ohms-per-volt—that is, the number of ohms required in the circuit per volt of full scale range. Thus a 0-1 ma meter when used as a voltmeter will have a sensitivity of 1000 ohms per volt. If the meter is to have a full scale deflection of 100 volts, the total resistance in the circuit must be 100,000 ohms. It will be noted that this will limit the current flowing to 1 ma which is also the current required for full scale deflection when 100 volts are applied.

3. MILLIAMMETERS: The milliamperes necessary for full scale deflection. Note the above mentioned milliammeter, 0-1 ma. i. e.,

The lower the sensitivity of a meter the more power is drawn from the circuit in which it is connected. Drawing power from a circuit changes the constants to a degree depending upon its regulation. If the power consumed changes the value being measured, it is obvious that an erroneous reading will result. It can thus be seen that more and more sensitive indicating meters have been sought in order to attain higher degrees of accuracy.

Meter Accuracy

Meter accuracy is usually specified as a percentage, such as 2%—this figure applying to most of the ordinary panel type meters in use by amateurs. It should be noted that this percentage applies to the *full scale reading*. For example, a 2% D'Arsonval meter reading 0-100 volts will be accurate within plus or minus 100 x .02 = 2 volts. At full scale this is of course 2% but at one-half scale (50 volts) 2 volts equals 4%. At one-

tenth full scale (10 volts) the error can be 20% and still meet the manufacturer's guarantee. It is not to be construed, however, that the meter *will* be this inaccurate; but it is possible and therefore in order to obtain reliable measurements the ranges of the meter should be such that the readings will be well upscale. D'Arsonval meters are very delicate instruments and should be accorded the proper protection. Special meter fuses are available ("Littlefuse") and should be used wherever possible. As a guide to selection of the proper fuse, *Table I* is presented.

Meter Shunts

It is often desired to increase the range of a milliammeter or, in a "universal" test instrument, one meter may be used on a number of different ranges. This is accomplished by means of shunts, that is, fixed resistances connected directly across the meter. The calculation of these shunt values is far more simple than actually producing the shunt at the exact value arrived at by calculation. The formula used in calculating shunt values follows:

$$R_s = \frac{E_m}{I_f - I_m}$$

where R_s = resistance of shunt (in parallel with meter), E_m is the voltage required to deflect meter full scale, I_f = full-scale current range desired, and I_m is the full-scale current of the meter (E and I in volts and amperes respectively).

In order to calculate E_m it is necessary that the internal resistance of the meter be known inasmuch as $E = IR$. The internal resistance of some common meters is shown in *Table II*.

As an example, assume that a Jewell, Pattern 88, 0-1 ma meter is to be used as a 0-100 ma meter. From *Table II* the internal resistance is 30 ohms. $E_m = .001 \times 30 = .030$ volts. It will be noted that the meter is also, fundamentally, a 0-30 millivolt meter.

$$R_s = \frac{.030}{.100 - .001} = .303 \text{ ohms.}$$

As mentioned previously, it is far easier to calculate the shunt value than to produce the shunt. The best shunts are made of low temperature-coefficient alloy wires and calibrated on a Kelvin bridge. The following method, however, is quite practical and will serve with sufficient accuracy for general use.

Ordinary cotton or silk covered magnet wire may be used, the required length being "finger-wound" and bound with thread. A copper-wire table, found in any radio engineering textbook, shows the resistance of all sizes of copper wire per thousand feet. Dividing the value by 1000 gives the resistance per foot, and the desired shunt value is arrived at by linear measurement. The largest size wire practical should be used for greatest accuracy, the bulk of the resulting shunt limiting the wire size. As an example, 1000 feet of #24 wire has resistance of 26.17 ohms. One foot = .02617 ohm. A typical .12-ohm shunt may consist of .12/.02617 = 4.585 feet of #24 wire.

Shunts constructed by this method can be only approximately correct. For utmost precision the shunt should be adjusted in comparison with a meter of known accuracy. The leads from shunt to meter terminals must be considered as part of the shunt.

Multipliers

To extend the voltage range of low reading milliammeters, multipliers are used *in series* with the meter. For highest accuracy wire-wound precision resistors are employed. If the application does not warrant this expense, carbon multipliers can be used. In this case it is necessary to measure them on a bridge. When the exact ohmage is not available, lower values may be filed until the desired resistance is reached. If metallized resistors are used they may be matched in

TABLE I

METER FUSE SELECTION

METER RANGE - MA.	FUSE VALUE - AMPS.	APPROX. FUSE RESISTANCE - OHMS
MICROAMMETERS	1/200	500
0 – 1	1/100	110
0 – 1 – 0 – 10	1/32	20
0 – 10 – 0 – 25	1/16	5
0 – 25 – 0 – 75	1/8	3
0 – 75 – 0 – 150	1/4	6.2
0 – 150 – 0 – 250	3/8	3
0 – 250 – 0 – 350	1/2	2.5
0 – 350 – 0 – 500	3/4	.4
0 – 500 – 0 – 750	1	.24
0 – 750 – 0 – 1000	1 – 1/2	.18

TABLE II

INTERNAL METER RESISTANCE

METER RANGE IN MA.	WESTON MODEL 301	JEWELL PATTERN 88	TRIPLETT MODEL 321
0 – .2	55 OHMS		360 OHMS
0 – .5	55 "		156 "
0 – 1	27 "	30 OHMS	33 "
0 – 1.5	18 "		22 "
0 – 3	18 "		11 "
0 – 5	12 "		8.5 "
0 – 10	8.5 "		3.1 "
0 – 25	1.2 "		1.2 "
0 – 50	2 "		.6 "

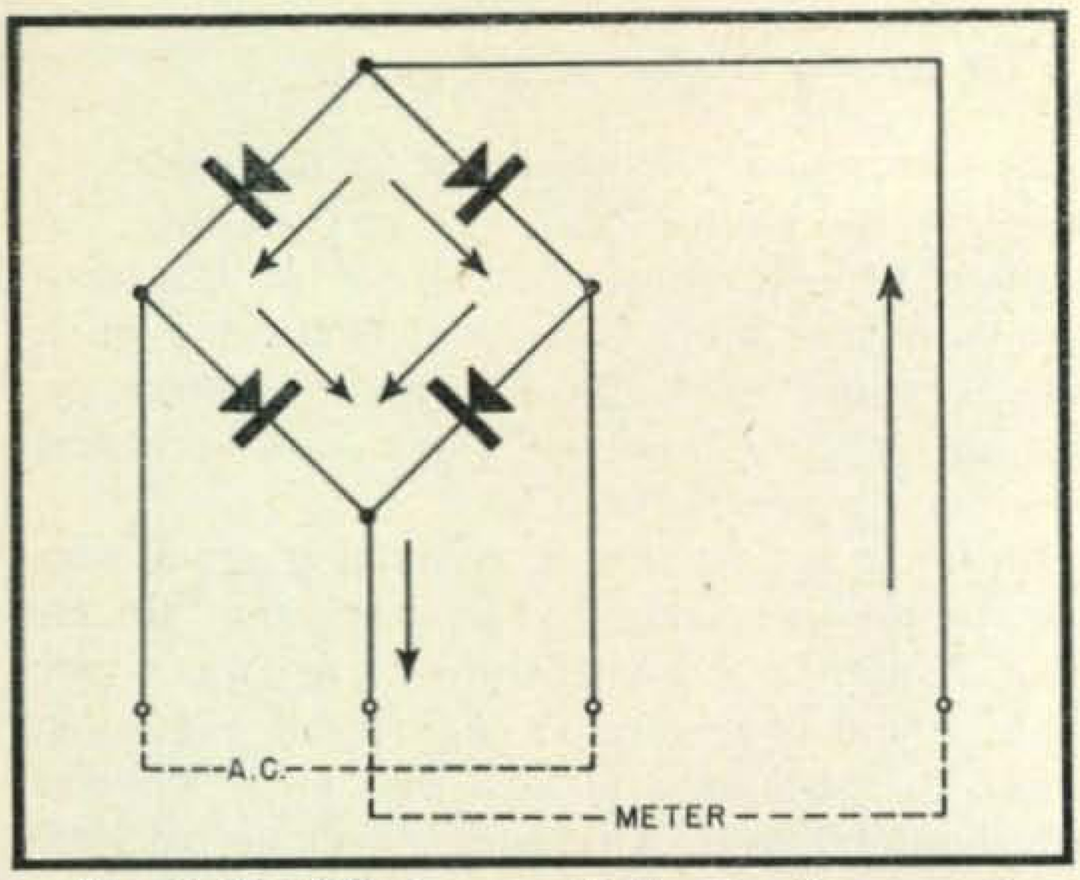

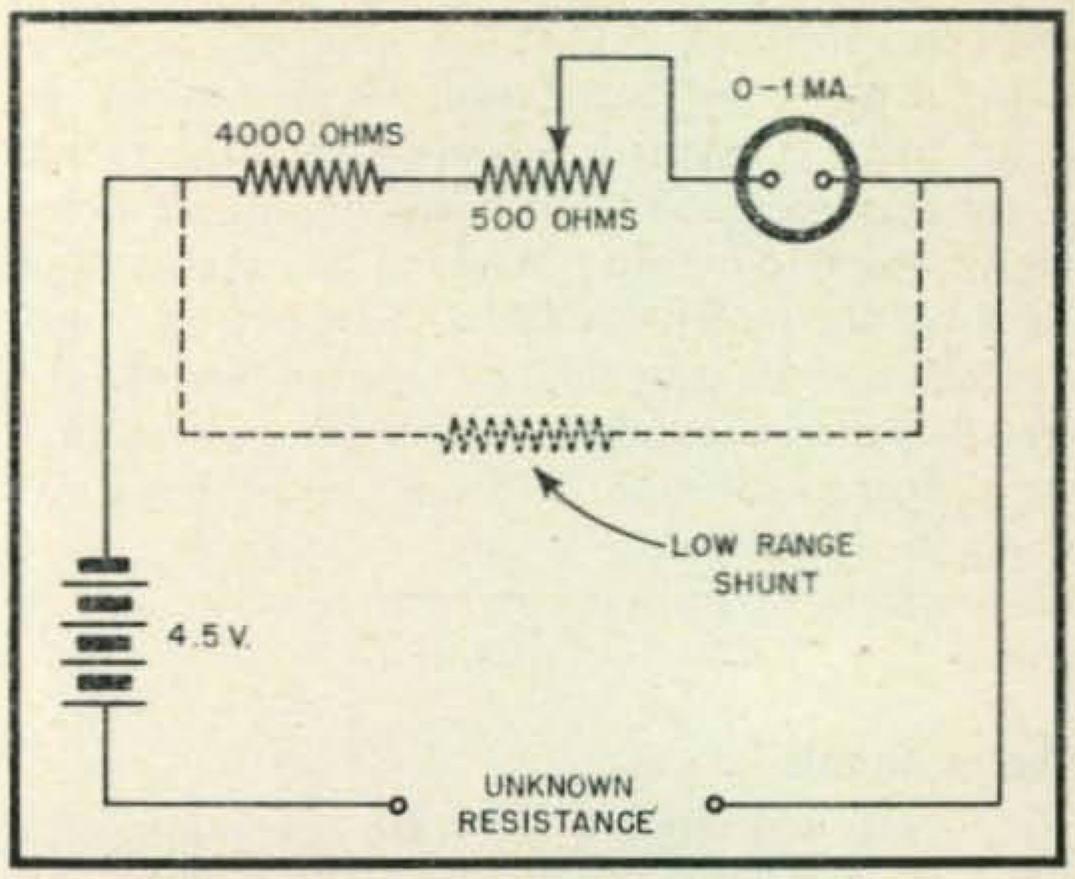

Fig. 6. (left) Bridge circuit showing the operation of a copper oxide rectifier. Fig. 7. (right) Series type ohmmeter. Basic circuit

pairs to obtain the correct value. It is necessary to take into consideration the sensitivity of the meter to determine the wattage of the resistors required. For example, a 125 ohm-per-volt meter may be used for a 0-500-volt range. The required multiplier is 500 x 125 = 62,500 ohms. If 500 volts is applied to the meter-resistor combination to cause it to read full scale, the power that must be dissipated in the multiplier is—

$$P = \frac{E^2}{R} = \frac{500^2}{62{,}500} = 4 \text{ watts}$$

—To be entirely correct, the above mentioned multiplier should be 62,500 ohms less the internal resistance of the meter. However, on high-voltage ranges the meter resistance can be considered negligible and ignored.

In the above example it will be noted that the power dissipated is 4 watts. These 4 watts must be drawn from the circuit under measurement and will affect that circuit accordingly. The influence of the meter on the circuit may be estimated by calculating the actual change in value due to 62,500 ohms being connected in parallel with it. It can be seen that the higher the sensitivity of the meter the less effect it will have on the circuit under measurement and therefore the meter will indicate more truly the actual voltage across it.

Rectifiers

In order to realize the advantages the highly sensitive D'Arsonval meter in alternating current measurements, copper oxide rectifiers are used. These units consist of small discs or squares of copper with a thin coating of copper oxide formed on one face of each. These are put together in a full-wave circuit as illustrated in *Fig. 6*. The direction of current flow is unilateral, that is, much more current will flow from the copper oxide to the copper than vice versa. With a.c. applied as indicated, current flows through the meter in one direction only, and the D'Arsonval meter can now be employed as a measuring instrument.

As is the case with any type of rectifier, the unit has an internal resistance which varies with the current passing through it. This resistance increases inversely with the current; therefore the scale on the meter is cramped at the lower end. The approximate resistance of a rectifier at various currents in connection with a 0-1 ma meter is as follows:

MA	*OHMS*
1.0	500
.9	530
.8	560
.7	620
.6	685
.5	769
.4	870
.3	1030
.2	1300
.1	2000

If the linear scale on the meter is employed for a-c measurements, capacity multipliers will sometimes provide greater accuracy. These multipliers can be used only at the frequency for which they are calculated, such as 60 cycles—the multiplier value being the capacitive reactance of the

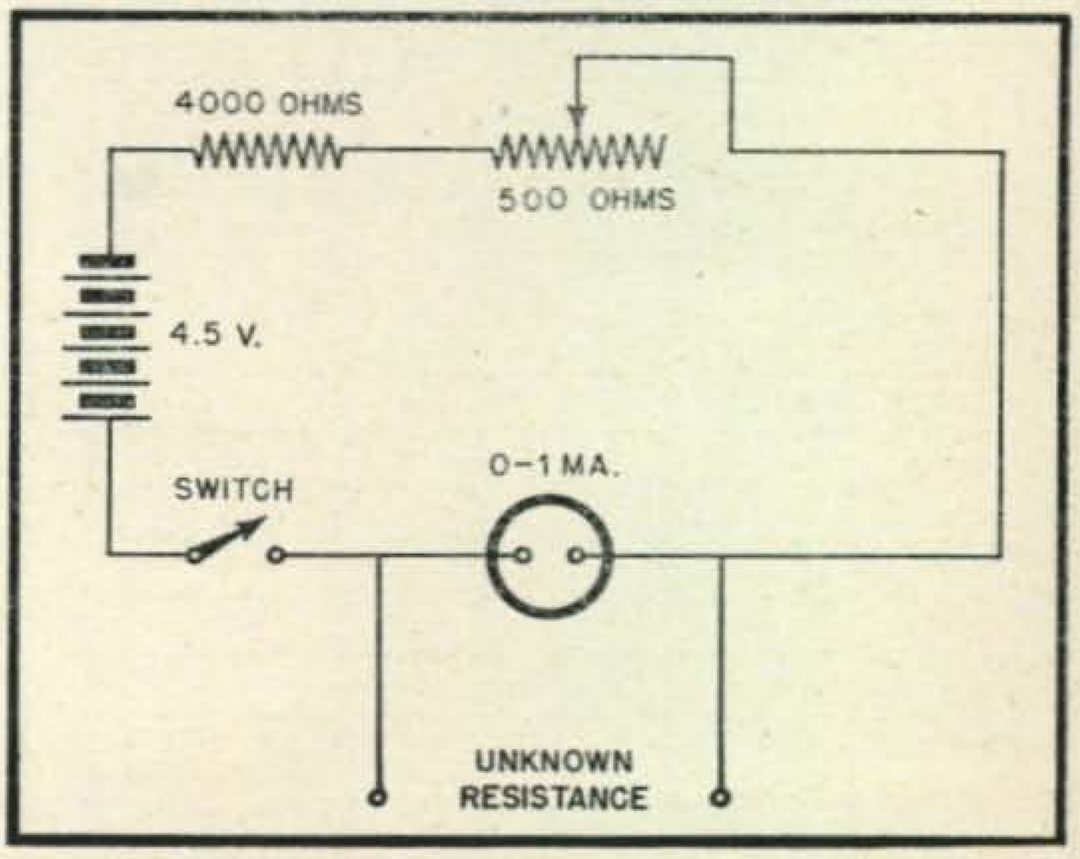

Fig. 8. Ohmmeter in a shunt circuit

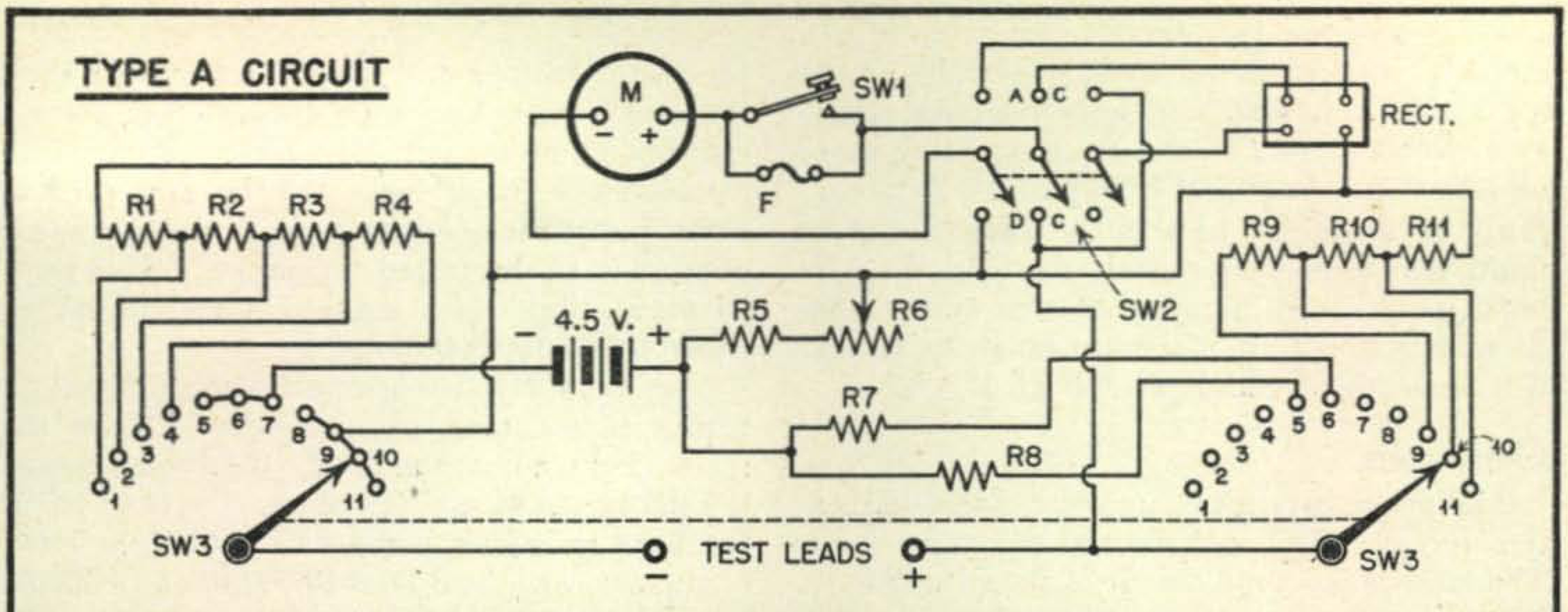

COMPONENT PARTS FOR TYPE A CIRCUIT			
RANGES	SW3	SW1 - PUSH-BUTTON SWITCH Normally open.	R1 - 9970 OHMS
VOLTS - D.C. 0-10	1	SW2 - 3P.D.T. TOGGLE SWITCH	R2 - 40,000 OHMS
A.C. & D.C. 0-50	2	SW3 - 2-GANG, 11-POINT SHORTING CONTACT ROTARY SWITCH.	R3 - 200,000 OHMS
0-250	3	RECT. - COPPER-OXIDE FULL-WAVE METER RECTIFIER.	R4 - 750,000 OHMS
0-1000	4	F - 1/100 AMP. FUSE.	R5 - 4000 OHMS
OHMS - 0-1000	5		R6 - 750 OHM W.W. POT. (Zero adj.)
0-10,000	6		R7 - 500 OHMS
0-100,000	7		R8 - 45.5 OHMS
MA. - D.C. 0-1	8		
0-10	9		
0-50	10		
0-250	11		

	WESTON 301	JEWELL 88	TRIPLETT 321
R9	2.4 OHMS	2.667 OHMS	2.933 OHMS
R10	.48 "	.533 "	.587 "
R11	.12 "	.133 "	.147 "

FIG. 9

Multi-meter circuit—type A

condenser. When using the same resistance multipliers for both alternating and direct currents, the accuracy on a.c. may be increased by shunting the resistors with condensers. Thus the multipliers are not changed in value on d-c measurements but are corrected when applying alternating current, as the condensers become effective parallel shunts across the multipliers, thus reducing their values to take into consideration the resistance of the rectifier and the fact that the a-c reading on the meter is average, not r.m.s. Capacity effects between the elements of the rectifier also tend to make the reading low. It is quite difficult to attain accuracy on a-c measure-

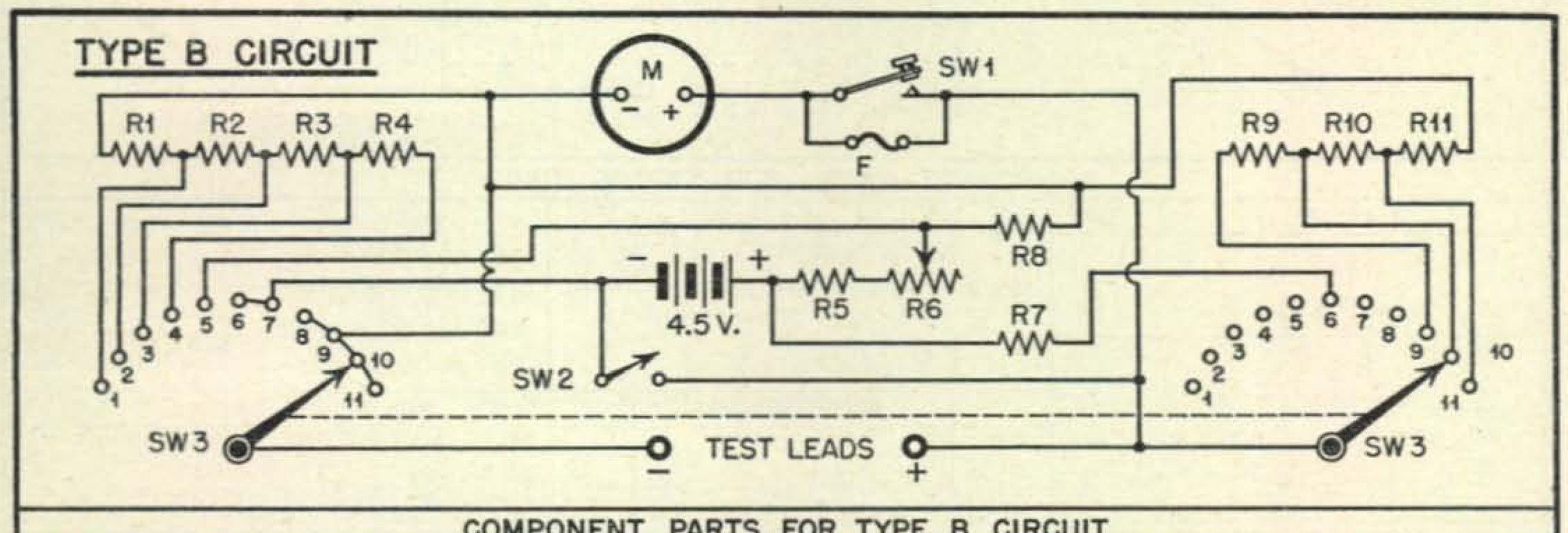

COMPONENT PARTS FOR TYPE B CIRCUIT			
RANGES	SW3	SW1 - PUSH-BUTTON SWITCH Normally open.	R1 - 9970 OHMS
VOLTS - D.C. 0-10	1	SW2 - S.P.S.T. TOGGLE SWITCH.	R2 - 40,000 OHMS
0-50	2	SW3 - 2-GANG, 11-POINT SHORTING CONTACT ROTARY SWITCH.	R3 - 200,000 OHMS
0-250	3	F - 1/100 AMP. FUSE.	R4 - 750,000 OHMS
0-1000	4		R5 - 4000 OHMS
OHMS - 0-500	5		R6 - 750 OHM W.W. POT. (Zero adj.)
0-10,000	6		R7 - 500 OHMS
0-100,000	7		
MA. - D.C. 0-1	8		
0-10	9		
0-50	10		
0-250	11		

	WESTON 301	JEWELL 88	TRIPLETT 321
R8	23.0 OHMS	20.0 OHMS	17.0 OHMS
R9	2.4 "	2.667 "	2.933 "
R10	.48 "	.533 "	.587 "
R11	.12 "	.133 "	.147 "

FIG. 10

Type B multi-meter circuit. SW-2 is closed only when using 0-500-ohm range. Set meter for full scale as usual

ments in a multi-range circuit, especially on the low ranges, comparable with d-c readings. However errors are reduced to a great extent by use of an off-set a-c scale and it is possible to obtain fairly accurate a-c indications using the same multiplier resistors for both a.c. and d.c. It must be kept in mind that one must compromise in the design of a multi-range instrument if it is not to be unduly complicated.

Ohmmeters

Two general types of ohmmeter circuits are extensively used and are known as series and shunt. The basic series type circuit is shown in *Fig. 7*. Here 4.5 volts are connected in series with 4,500 ohms which limits the current through the meter to 1 ma. The resistance consists of 4,000 ohms fixed and a 500-ohm rheostat. This permits adjustment as the battery voltage drops off with age and use. When shorting the terminals, the rheostat is adjusted so that the meter reads full scale. A resistor connected between the terminals will cause less than 1 ma to flow in the circuit and the meter reading will therefore be lower than full scale, depending upon the value of the resistor being measured. By simple mathematical calculation a linear scale may be calibrated in ohms, but it is customary to use a direct reading ohm scale as illustrated farther on. This basic circuit is suitable for resistance measurements between 0 and 100,000 ohms.

As very low resistance values are difficult to read with accuracy, it is possible to shunt the meter circuit so as to make the total resistance of the circuit less than 4,500 ohms. For example, if the total resistance is reduced to 450 ohms the ohmmeter range will be 0-10,000 ohms, utilizing a multiplying factor of .1 on the original scale. This is accomplished by means of a shunt of 500 ohms across the meter and the 4,500 ohm resistance which is in series. Note that the current through the meter when the terminals are shorted will still be 1 ma, but the current through the external circuit will now be 10 ma. If the meter circuit is shunted to a total value of 45 ohms, the ohmmeter range will be 0-1000 ohms but the

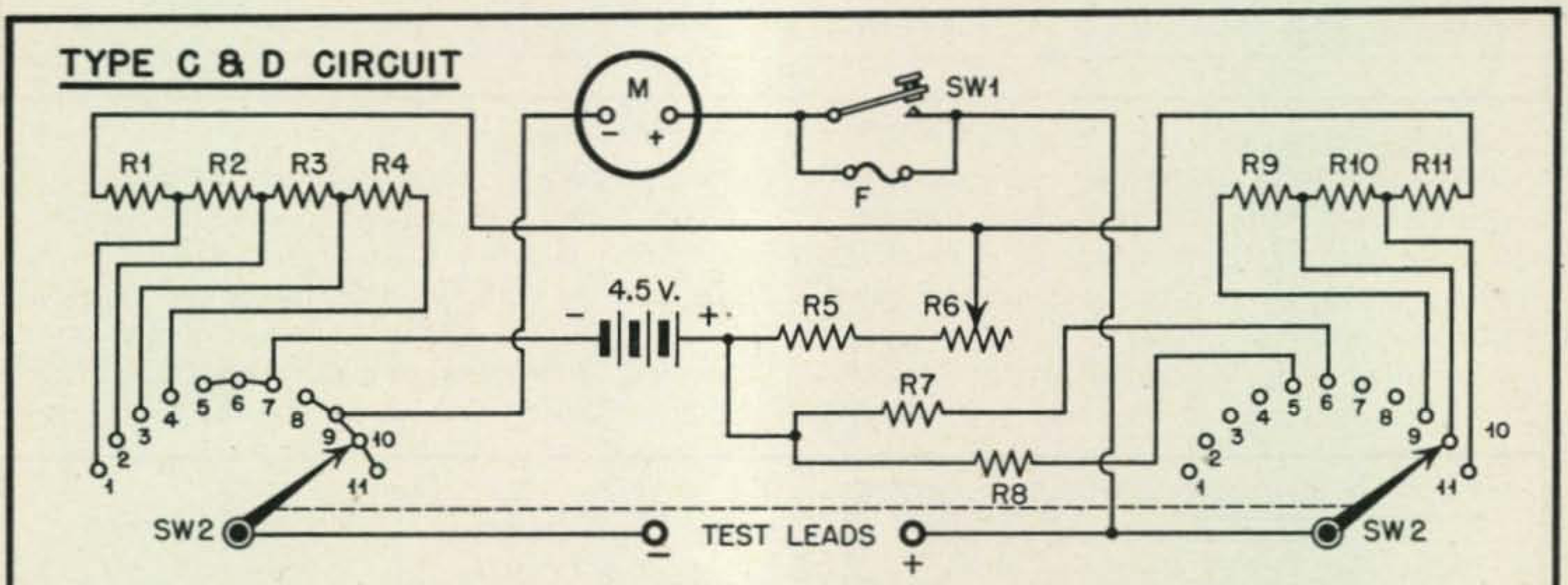

COMPONENT PARTS FOR TYPE C CIRCUIT

RANGES		SW2
VOLTS - D.C.	0-10	1
	0-50	2
	0-250	3
	0-1000	4
OHMS -	0-1000	5
	0-10,000	6
	0-100,000	7
MA. - D.C.	0-1	8
	0-10	9
	0-50	10
	0-250	11

SW1 - PUSH-BUTTON SWITCH Normally open.

SW2 - 2-GANG, 11-POINT SHORTING CONTACT ROTARY SWITCH.

F - 1/100 AMP. FUSE.

R1 - 9970 OHMS
R2 - 40,000 OHMS
R3 - 200,000 OHMS
R4 - 750,000 OHMS
R5 - 4000 OHMS
R6 - 750 OHM W.W. POT. (Zero adj.)
R7 - 500 OHMS
R8 - 45.5 OHMS

	WESTON 301	JEWELL 88	TRIPLETT 321
R9	2.4 OHMS	2.667 OHMS	2.933 OHMS
R10	.48 "	.533 "	.587 "
R11	.12 "	.133 "	.147 "

COMPONENT PARTS FOR TYPE D CIRCUIT

RANGES		SW2
VOLTS - D.C.	0-15	1
	0-150	2
	0-300	3
	0-600	4
OHMS -	0-1000	5
	0-10,000	6
	0-100,000	7
MA. - D.C.	0-1	8
	0-15	9
	0-150	10
	0-300	11

SW1 - PUSH-BUTTON SWITCH Normally open.

SW2 - 2-GANG, 11-POINT SHORTING CONTACT ROTARY SWITCH.

F - 1/100 AMP. FUSE.

R1 - 14,970 OHMS
R2 - 135,000 OHMS
R3 - 150,000 OHMS
R4 - 300,000 OHMS
R5 - 4000 OHMS
R6 - 750 OHM W.W. POT. (Zero adj.)
R7 - 500 OHMS
R8 - 45.5 OHMS

	WESTON 301	JEWELL 88	TRIPLETT 321
R9	1.735 OHMS	1.929 OHMS	2.121 OHMS
R10	.097 "	.107 "	.118 "
R11	.096 "	.107 "	.118 "

FIG. 11

Multi-meter circuit—types C and D

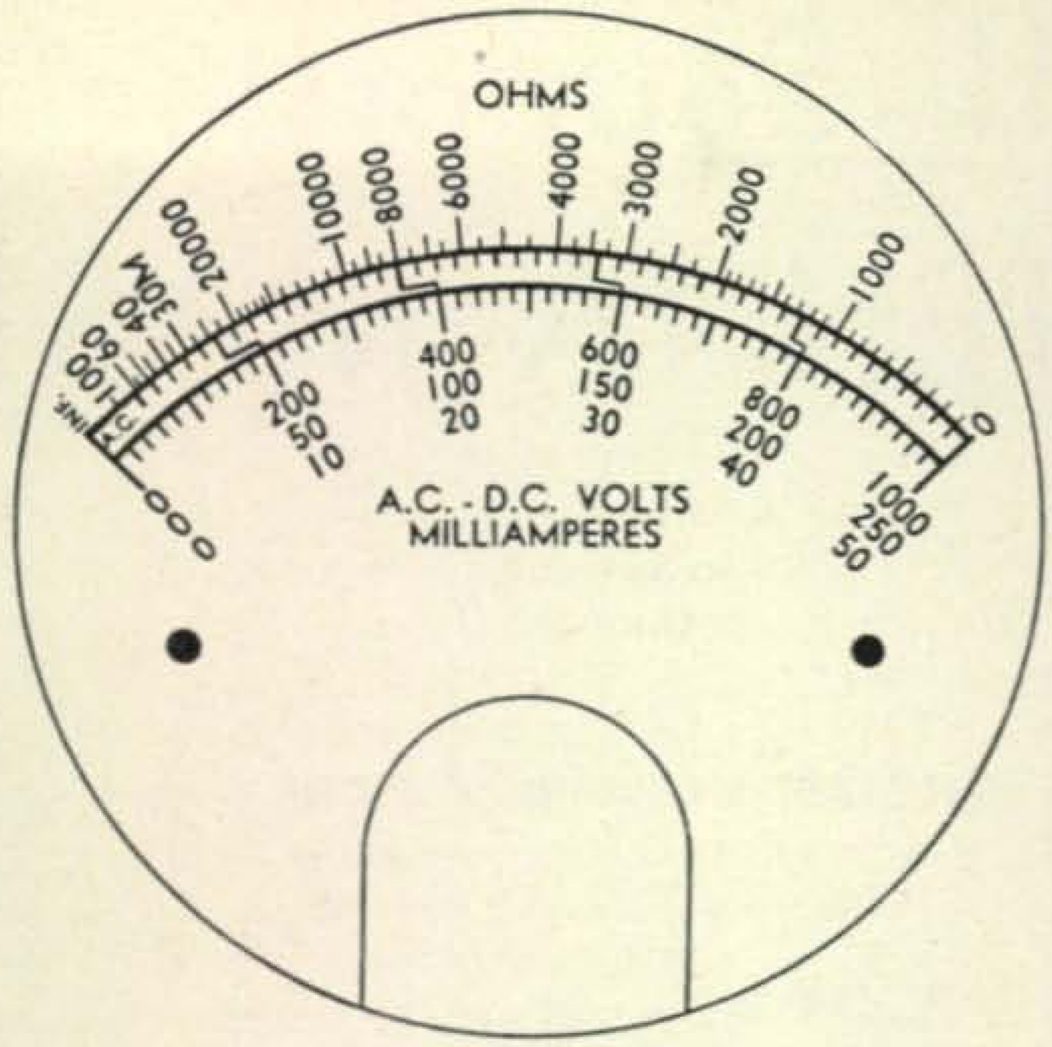

Fig. 12. Type A scale

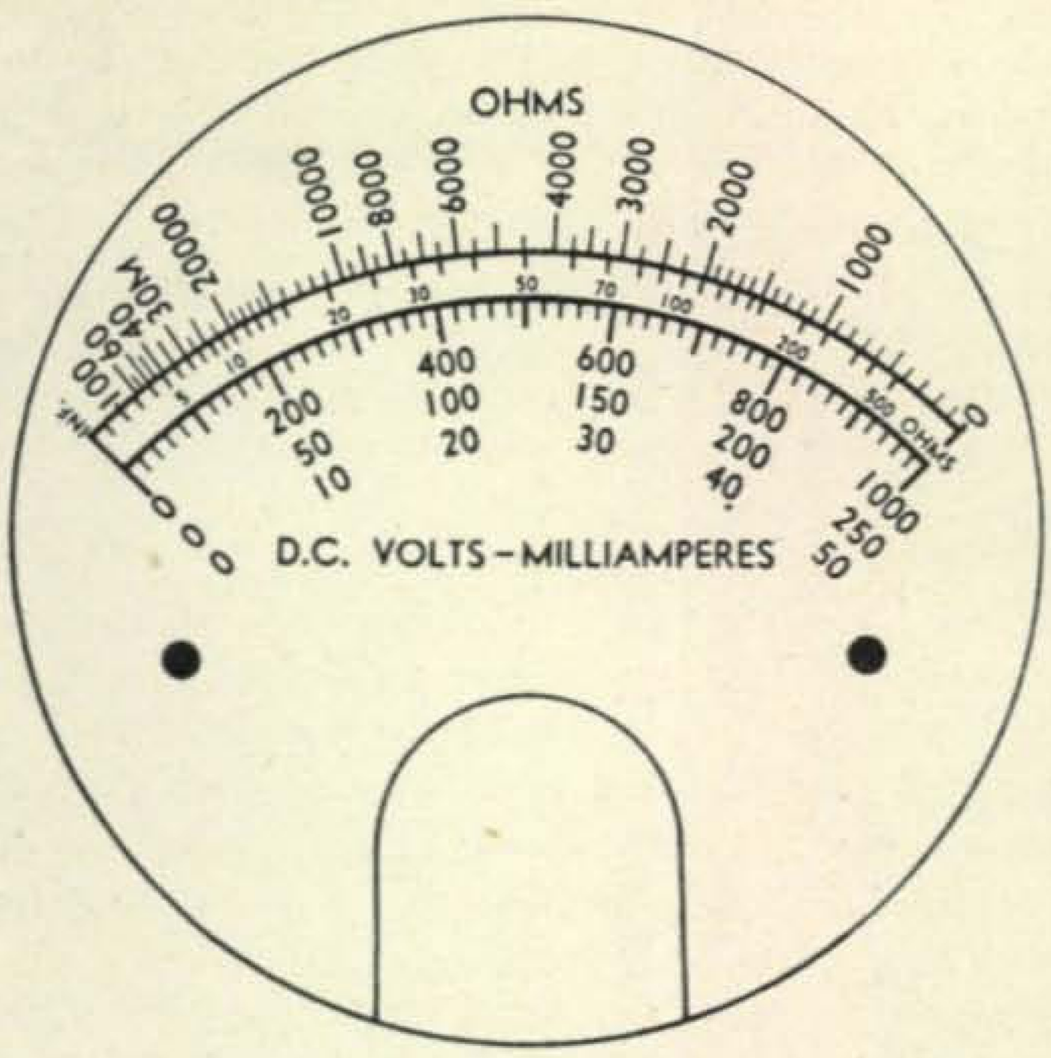

Fig. 13. Type B scale

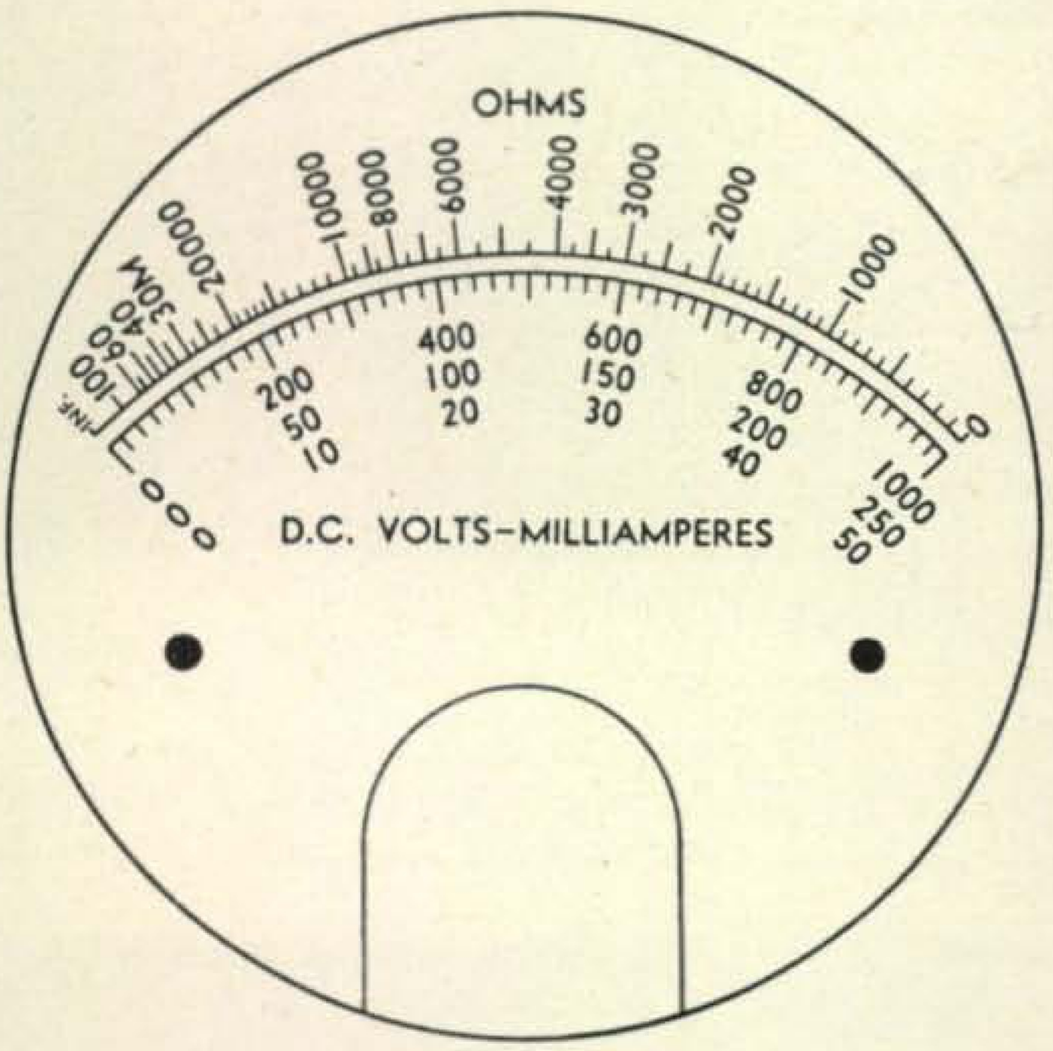

Fig. 14. Type C scale

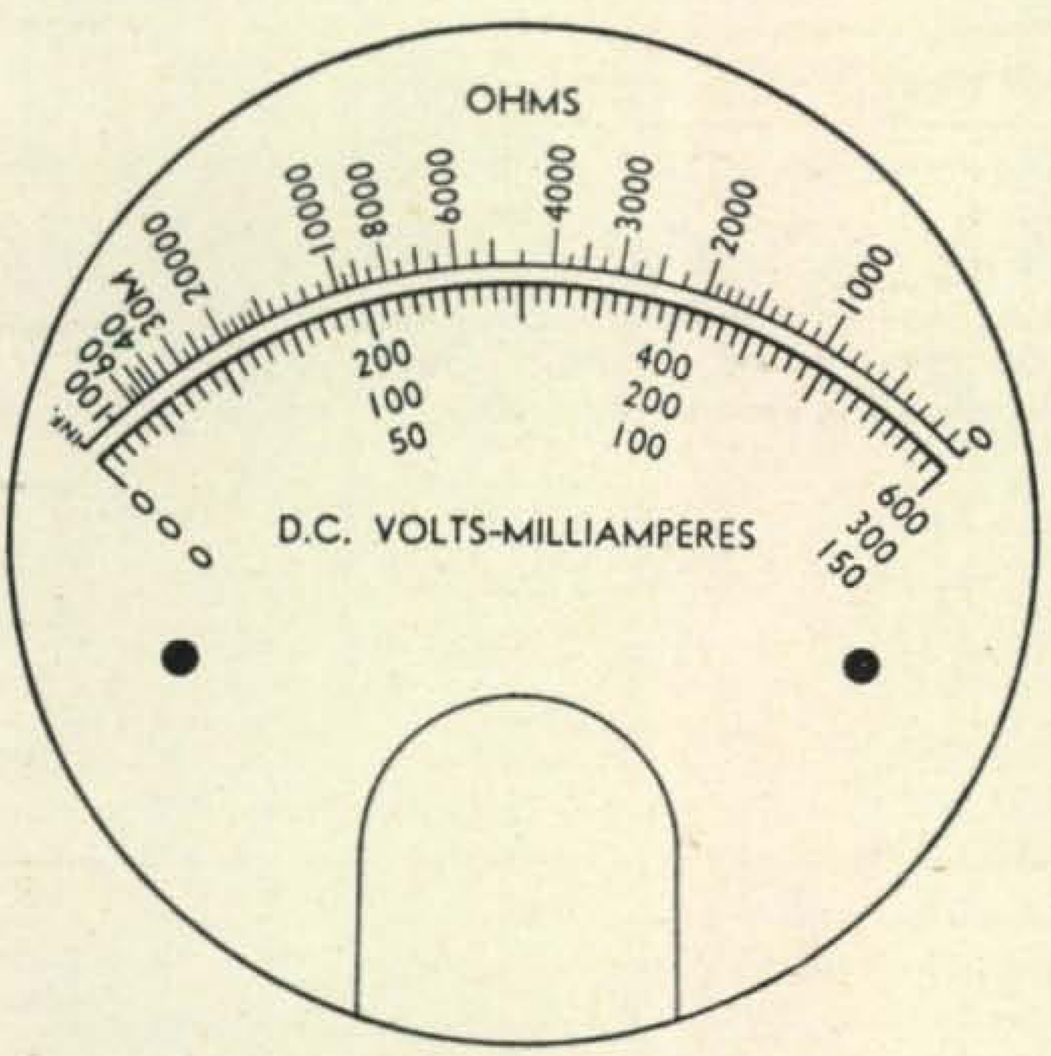

Fig. 15. Type D scale

Special scales for milliammeters. These are drawn to exact size for several models in general use

current through the external circuit will be 100 ma. It is therefore necessary to ascertain whether the device being measured is able to stand this high current without damage. The battery drain is also very high.

If high current on low resistance measurements cannot be tolerated, recourse may be taken to the shunt ohmmeter circuit illustrated in *Fig. 8*. The same resistors and meter are employed but the unknown resistor is shunted directly across the meter. The range of this circuit is 0-500 ohms and its main advantage is that only 1 ma flows through the external circuit.

If it is desired to read values higher than 100,000 ohms the series circuit may be employed with higher voltages. For example, with 45 volts and 45,000 ohms in the circuit, the range will be 0 to 1 megohm. With 450 volts and 450,000 ohms the range is increased to 10 megohms. Extended ranges may be had without using high voltages by employing a more sensitive meter. If a 100

[see page 43]

FLEXIBLE SHAFTING

[*from page 24*]

and staking, and rolling. (Special tools are required in most of these processes.)

A good craftsman could handle the first procedure, which consists of placing the fitting over the end of the casing and pressing together the common section between dies. A mandrel should be inserted in the bore of the casing to prevent distortion in the swaging operation.

Various adapters for flexible shafts are available. While most of them are designed for special applications, they can be used for similar purposes within their size range. Typical of these adapters are those designed for close clearance connections where space limitation does not permit a direct connection without bending the shaft too sharply. There is a T-type coupling which permits the branching of two shafts from one, and so on.

Direct coupling between the shafting and controlled unit is not always satisfactory because of torque. In these cases it is necessary to install a gear or gear-and-pinion arrangement. This can be a simple 1:1 ratio gear, or if vernier tuning is desired, a higher ratio of drive-to-driven.

The applications of flexible shafting in amateur radio are many-fold. Some possible uses are illustrated—but countless others will suggest themselves, such as remote control, coupling, unusual mechanical designs, rotary antenna indicators, and even turning small beams. Wartime surpluses and automobile fittings will supply sufficient quantities of shafting and accessories until such time as the special product is again available commercially.

KNOW YOUR METER

[*from page 19*]

microampere meter is used, it will permit a 0 to 1 megohm range with only 4.5 volts of battery.

Thermocouple Meters

It is not possible to use iron vane, rectifier or dynamometer instruments for the measurement of radio-frequency currents. One of the early types of r-f measuring devices was known as the "hot-wire" ammeter. This consisted of an alloy wire drawn taut between posts through which the radio-frequency current was passed. A thread was attached to the center of the wire, wound around the pointer shaft and thence to a tension spring. As r.f. flowed through the wire it became hot and thus expanded, permitting the tension spring to take up the slack, thereby pulling the

Long, Satisfying Service



IT'S ENGINEERED WITH Hi-Q COMPONENTS

CERAMIC CAPACITORS

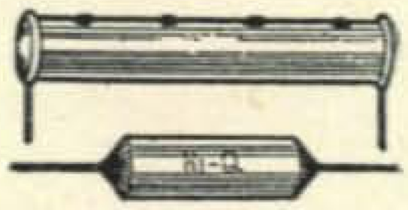



WIRE WOUND RESISTORS

CHOKE COILS

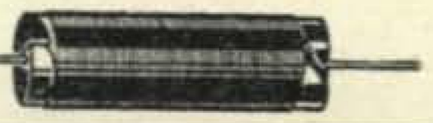

ELECTRICAL REACTANCE CORPORATION
FRANKLINVILLE, N. Y.

Are YOU ready to go on the air?

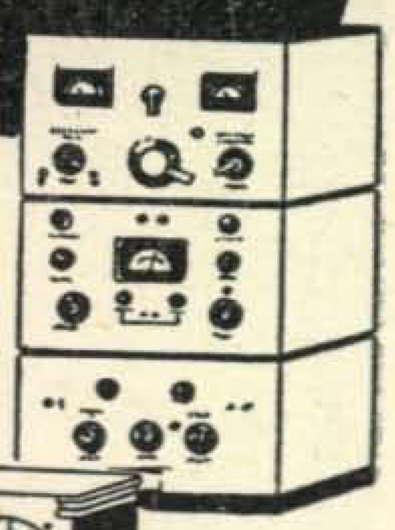

Get FIRST Delivery From Leo!

TRANSMITTER KITS
WRL transmitters at the price you want to pay...15, 35, 70, 150 watts. Also units custom built to your specs.

RECEIVERS
Receivers of all manufacturers at OPA prices . . . ready for quick delivery.

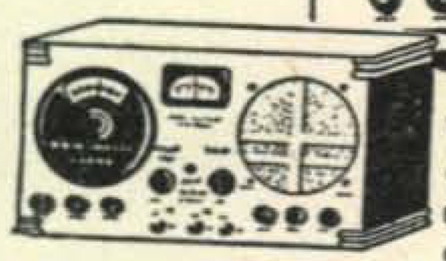

We invited inquiries for special equipment of all kinds.



EXCLUSIVE AT LEO'S
12 page V-J Radio Parts Flyer .....FREE
Giant Radio Reference Map.15c
Handy Tube-Base Calculator.25c

Immediate delivery on transmitting tubes and condensers, and "Everything for the Ham." Get yours FIRST from Leo.

Address Leo, W9GFQ, Dept. CQ-1
Council Bluffs, Iowa

Wholesale RADIO LABORATORIES

All phases of
RADIO DESIGN PRODUCTION and OPERATIONS are Covered by

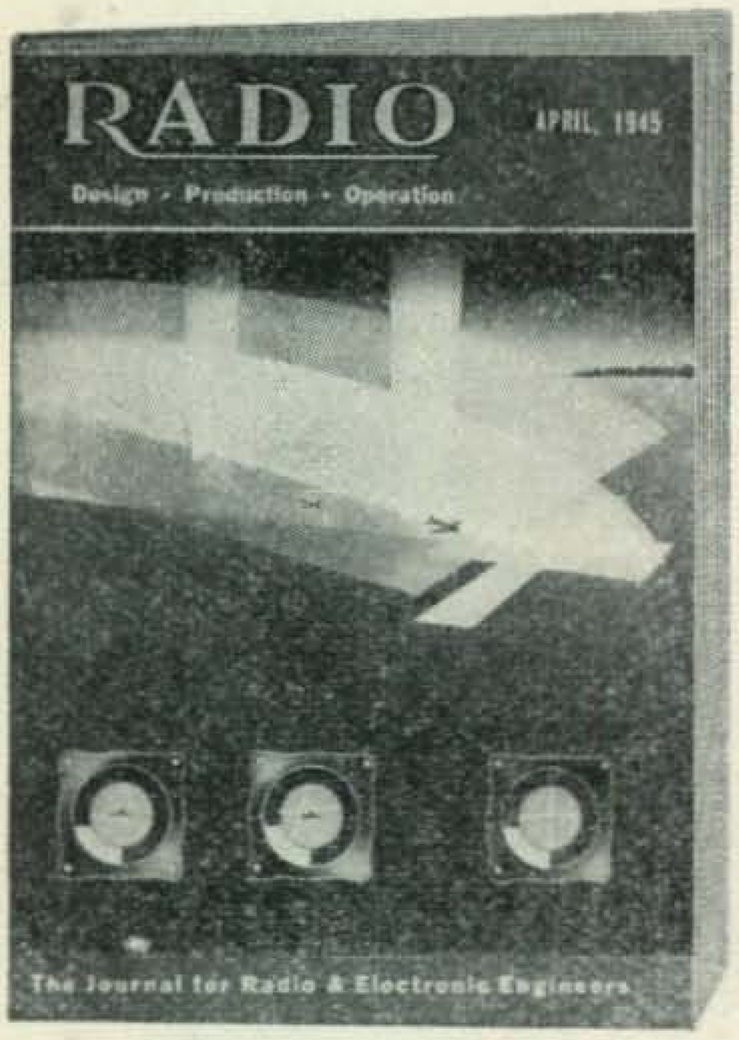

Subscribe Now.

Subscription Price: $3.00 per year in U.S.A., $4.00 elsewhere.

"RADIO" is first choice of radio-electronic engineers.

RADIO MAGAZINES, Inc., 342 Madison Ave., N.Y.C.



FREE TO YOU
COLOR CODE AND OHMS LAW CALCULATOR

Great Time Saver

Here's something you need every day in your work. Easy to operate. Solves many problems for you in a jiffy. We're offering it *Free* to radio men, electronic engineers and others in the business. Attach coupon to your letterhead.

BURSTEIN-APPLEBEE CO.
1012 McGEE ST., KANSAS CITY 6, MO.

MAIL COUPON NOW

BURSTEIN-APPLEBEE CO.
1012 McGEE, KANSAS CITY 6, MO.
Send me FREE Color Code and Ohms Law Calculator along with latest catalog.

I am_____
STATE CONNECTION IN INDUSTRY

NAME_____

ADDRESS_____

TOWN_____ STATE_____

thread which in turn revolved the pointer shaft causing the meter to indicate.

The modern and more efficient method of high-frequency current measurement uses the thermocouple. The principle of operation is based on the fact that if two dissimilar metals are joined and the juncture heated, a voltage will be developed across the metals, the value depending directly upon the temperature at the bond. If the two free ends are connected to a D'Arsonval meter, an indication will be obtained which may be calibrated in terms of the amount of heat in the couple which is directly related to the r-f current. Since the heat (power) is proportional to the current squared (I^2), the meter scale is not linear but is crowded at the lower end. The meter is therefore referred to as a current-squared meter.

A regular D'Arsonval movement is used but the internal resistance is kept as low as possible in order to transfer a maximum of power from the thermocouple to the meter. The thermocouple may be located in the meter or may be external so that it can be placed directly in the r-f circuit with the meter perhaps a long distance away.

Multi-Meter Circuits

Three basic multi-meter circuits that may be constructed from readily available parts, are shown in *Figs. 9, 10* and *11*. They are self-explanatory in that the ranges provided are listed with the parts list for each. Note that there are four parts lists. *Circuits C* and *D* having two parts lists due to different ranges for each. The constructor is thus given a choice of four multimeter arrangements. *Circuit B* features the shunt type ohmmeter outlined above. Four

CLASSIFIED ADS

Advertising in this section must pertain to amateur or experimentation radio activities. Rate—20c. per word per insertion. Remittance in full must accompany copy. No agency or term or cash discounts allowed. No display or special typographical ad setups allowed. "CQ" does not guarantee any product or service advertised in the Classified Section.

CONDENSERS, new. Rectangular cans. GE Pyranols; 4mf1000v $1.75; 2mf1500v $1.75; 8mf1500v $3.75; 4mf-2000v $3.00; 4mf3000v $6.75; 2mf4000v $8.50. C-D Dykanols: 8mf1000v $2.75. HV micas, transmitting type: .0015mf5000v $1.50; .005mf5000v $1.75. WE 3″ meters 0-200 microamp $5.75. 10% discount on orders over $15. Les Dubin, W2AQN, 147 Elm Ave., Mt. Vernon, N. Y.

FIRST CHECK seventeen dollars takes INSTRUCTOGRAPH like new with book, fifteen tapes. Tempo Music Shop 5946, Hollywood Blvd., Hollywood 28.

RECEIVERS IN STOCK. Conklin Radio, Bethesda, Maryland.

QSL CARDS. Send for samples, W9KXL, 1507 Central Ave., Kansas City, Kansas.

Welcome back "HAMS"

You did a grand job.

It is good to greet old friends and we invite new ones.

Make this store your headquarters when in and around Seattle.

Browse around our Complete Library. Inspect the new equipment. Meet your friends here, in a room just for Hams.

SEATTLE RADIO SUPPLY, INC.
2117 Second Ave. SE-2345 Seattle 1, Wash.
Headquarters for Hams

In the Rocky Mountain Region
it's
Radio & Television Supply Co.
308 EUCLID AVENUE, PUEBLO, COLO.
"If we don't have it, we'll get it—or it can't be had! Phone 5729"

In Northern California
it's
SAN FRANCISCO RADIO & SUPPLY CO.
Public Address Equipment
Short-Wave Receivers & Transmitters
●
Headquarters For Amateur Radio Supplies
20 Years Dependable Service.
1280-1284 Market St., San Francisco 2, Calif.

ELECTRONIC SPECIALISTS
FORT ORANGE RADIO DISTRIBUTING COMPANY
UNCLE DAVE'S RADIO SHACK
356 Broadway
Albany 7, New York
Phones 3-2109, 3-2100

FILTER CONDENSER BARGAINS!
BIG NEW CATALOG! WRITE FOR LIST!
Newark ELECTRIC Company
CHICAGO
115-117 W. 45th St. NEW YORK 19
323 W. Madison St. CHICAGO 6

• Ted McElroy
World's Largest Manufacturer of Wireless Telegraphic Apparatus
COMPLETE CENTRAL OFFICE EQUIPMENT
McElroy Manufacturing Corp.
82 Brookline Avenue • Boston, Massachusetts

meter scales for these multi-meter circuits are illustrated in *Figs. 12, 13, 14* and *15*. These scales are available in various radio parts stores and are furnished for Weston, Triplett and Jewell three-inch meters.

HANDIE TALKIE

[*from page 11*]

because you do not know whether or not you have the correct harmonic. The signal generator is tuned to 18 megacycles, which is the 8th sub-harmonic of 144 mc. To verify this I checked with the 6th and 9th sub-harmonics and found the points on the 144-mc band to be the same. The signal generator calibration was slightly different from the Lecher wire measurements but the latter is close enough in most cases.

The antenna should be adjusted to a length which permits smooth regeneration over the entire dial. This will be found to be slightly above and slightly below the exact ¼ electrical wavelength at 146 megacycles. A 100,000-ohm optimum-valve resistor is substituted for the usual regeneration control in this Walkie Talkie.

The external battery connection is very convenient as it permits saving the small internal B battery when extended portable service is required. Ninety volts of external B battery works very well, providing more power and tends slightly to charge the internal B battery.

Conclusions

The writer has used this Handie Talkie without many of its present improvements, on 112 mc for over two years. Distances up to 6 miles have been easily covered over level ground, while the record is 35 miles from a high location in New Jersey to New York City. Of course if the QRM is very bad don't expect to communicate across these distances without considerable trouble. The power input to the oscillator is only .4 watt, but since there is ample modulation, reasonably good results can be expected.

From the photographs one can see that one's major effort will be expended in the construction of the cabinet and the other metal details. Without these parts closely duplicating those described in the text, the utility of the set may be greatly reduced. The wiring job on the average radio gear is rather simple as hard and fast rules apply to most wiring problems. However, in the construction of a portable radiotelephone which must be light in weight, compact, and dependable, the choice and layout of parts is a most important factor. The writer trusts this Handie Talkie will go a long way toward offering the amateur and the civilian what they are looking for in a high-frequency portable radio-telephone.

Economical Use of a Milliammeter

Using One Meter for the Three Most Important Transmitter Measurements

By William G. Pierpont, W9BLK-HPU*

IN THE amateur's transmitter it is common to have three types of meters: The d.c. meter for milliamperes and volts, the a.c. meter for filament voltage, and the radio frequency ammeter for the antenna current. Articles have already appeared in *QST* on using one milliammeter for measuring all the plate and grid currents and the voltages on the plates of the tubes, by using jacks and plugs and various shunts and series resistors. In this article the writer will explain how one meter may be used for measuring plate or grid current, plate or grid voltage, a.c. filament and line voltage, and radio frequency antenna current.

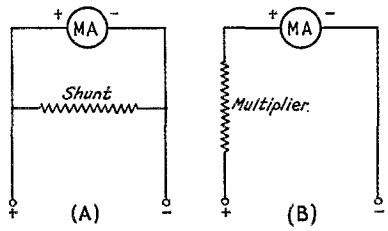

FIG. 1 — SHUNTS AND MULTIPLIERS ADAPT THE LOW-RANGE MILLIAMMETER FOR CURRENT AND VOLTAGE MEASUREMENTS

The shunt resistor in (A) extends the range of current measurement. The series resistor in (B) will make a wide range of voltage measurements possible with suitable choice of values.

The meter used for all measurements is a d.c. milliammeter having a range of 0–10 or 0–15 milliamperes. This meter should be of the Weston or Jewell type or one having the same type of movement. If you do not already have one, one can be made by using one of the Jewell or Weston low-range voltmeters, such as used for measuring filament voltage on the old battery type receivers. The case must be removed and the series resistor or resistors removed. The small meters used on the old Radiola receivers make excellent milliammeters if of the type mentioned. The movement is about 0–8 or 0–10 mils full scale.

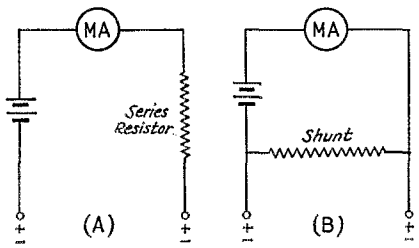

FIG. 2 — USING A COPPER-OXIDE DISC RECTIFIER TO CONVERT THE D.C. MILLIAMMETER TO A.C. MEASUREMENTS

Connections for measuring voltage are shown at (A), for measuring current at (B).

THE GRID OR PLATE MILLIAMMETER

The maximum reading of the low-range milliammeter can be extended quite easily for reading plate and grid currents. Shunts for the meter are connected as shown in Fig. 1A. The lower the resistance of the shunt, the greater will be the full-scale current reading. The shunts may be wound around a small spool after the correct length of wire is determined. The range of the shunted meter may be found by comparison with a meter of reliable make. If the resistance of the milliammeter is known, the shunt resistance needed for any desired range can be found from the following formula:

$$R_s = \frac{R_m}{N-1}$$

where R_s is the required shunt resistance, R_m is the resistance of the meter, and N is the scale multiplier; i.e., if a 0–10 mil scale is to be extended to 150 milliamperes N is 15, etc.

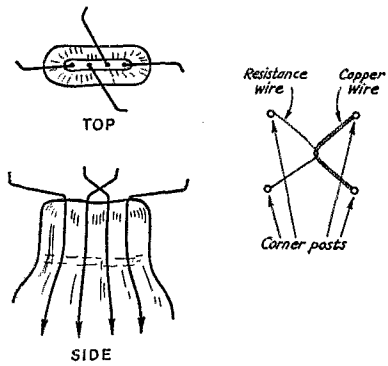

FIG. 3 — HOW THE R.F. THERMOCOUPLE IS MADE

The support is the glass stem of an old tube, preferably of the four-prong type. The grid, filament and plate wires are cut off and bent as shown to form the diagonals of a square. The wires forming the couple are soldered to the points of the square as shown at the right, being hooked together as shown.

* 5440 East Douglas Ave., Wichita, Kansas.

THE D.C. VOLTMETER

Plate or grid voltage may be measured by fitting the meter with series resistors or "multipliers" of the right size and then calibrated by comparison with a standard meter. By using several large resistors in series plate voltages up to 5000 volts may be measured. However, care must be taken that the resistors have well-insulated

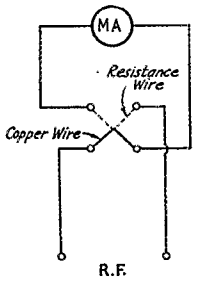

FIG. 4—R. F. MEASUREMENTS USING THE THERMOCOUPLE AND D.C. MILLIAMMETER

terminals, for should one of the resistors become shorted the meter will be ruined. The series resistors also must be capable of carrying the full-scale current taken by the milliammeter. Fig. 1B shows the connections for d.c. voltage measurements. The size of the series resistor is found by experiment or from the following formula:

$$R = \frac{E \times 1000}{I}$$

where R is the value of the series or multiplier resistor in ohms, E is the maximum voltage to be measured, and I is the full-scale reading of the meter in milliamperes.

THE A.C. VOLTMETER

When the d.c. milliammeter is fitted with a few rectifier discs and a series resistor of the right value, we have a voltmeter for measuring the voltage on the line, or with another series resistor we may measure the filament voltage. Even high voltages may be measured, provided the series resistor is large enough. See Fig. 2A for details.[1]

If the low-range a.c. voltmeter is connected across the output of a receiver or speech amplifier the output may be measured. The principle is the same as with meters made especially for the purpose.

THE A.C. MILLIAMMETER

This meter is not often used by amateurs, but it is very handy in some types of work. The milliammeter is fitted with the disc rectifier as for the a.c. voltmeter but shunts are used instead of series resistors. Fig. 3B shows the connections.

THE RADIO FREQUENCY AMMETER

Radio frequency ammeters are expensive, but it is surprising how simply they can be constructed in the shack. The thermocouple is the heart of the r.f. ammeter. It is easy and cheap to build since it usually can be made from scraps of wire left over from other work.

The thermocouple is constructed as follows: Take an old tube of the 01–A or similar type (it may be burnt out), carefully break the glass envelope surrounding the elements, but do not allow the glass stem to be cracked or broken, or the elements to be bent very much while breaking. Cut the filament *support* wires — not the ones which go through the stem to the tube base connections — close to the stem. Cut the plate, grid and filament wires off one-half inch above the top of the stem. These are the wires which go to the connections in the prongs. Other wires, such as extra wires which support the plate and grid on the other side, are cut close to the stem. Bend the four wires remaining above the stem so that the tip of each forms one corner of a square one-half inch on a side, as shown in Fig. 3. They are bent slanting so that the corners are above the level of the top of the stem.

Now take a piece of resistance wire, about No. 28 B. & S. gauge — may be of nickel, nichrome, constantin, or some of the wire from the grid of the old tube — and solder one end to one of the wires forming the corner of the square. The other end of the resistance wire is soldered to the next adjacent corner wire, so that the wire forms a "V" with the point or apex of the "V" in the center of the square.

Next take a piece of bare copper wire about the same size and length as the resistance wire. Solder one end of it to one of the remaining wires of the square. Pass the free end of the copper wire through the top of the "V" and out through the bottom, and then to the remaining corner wire. Before soldering it to the corner wire pull it tight, so that both the resistance wire and the copper wire are under tension, then solder to the corner wire.

The couple is now complete and may be used as it is, mounting in a regular tube socket. Alternatively, the base may be carefully removed and the glass stem cut off about one-half inch from the pressed end which holds the electrodes, and the assembly mounted in a small box. Do not allow the pressed portion to break or crack as operation of the couple will be impaired.

Fig. 4 shows the method of connecting the couple to the milliammeter. Several couples may be made to give as many ranges as may be desired. No calibration is necessary as comparative measurements are sufficient. However, the meter

(Continued on page 36)

[1] Since the direct current through the meter will depend upon the characteristics of the rectifier, specific values for series resistors and shunts for a.c. readings cannot be given but must be determined by experiment. The meter should be calibrated against a regular a.c. meter of suitable range unless comparative measurements only are wanted.—EDITOR.

grid is a step-down transformer. This arrangement permits the low grid impedance to be reflected through the transformer to the preceding tube as an impedance large enough for proper loading. In this way distortion is avoided.

6. An audio amplifier designed to feed a normal load of 500 ohms is connected to a 5000-ohm load. How will the output and quality be affected? If we assume that the impedance ratio of the output transformer is 10-to-1, the 500-ohm load would "look" like 5000 ohms to the tube plate and the 5000-ohm load would "look" like 50,000 ohms. Assuming perfect regulation, the voltage across the 5000-ohm load and that across the 500-ohm load will be equal. The power in each case will be $E^2/5000$ and $E^2/500$. This shows that the rate at which energy is dissipated in the 5000-ohm load is one-tenth as great as the rate in the 500-ohm load. In general, it may be said that *increasing* the effective load resistance in the plate circuit *decreases* the harmonic distortion and *decreases* the power output.

7. Two amplifiers are to be connected together with a volume control between. (See Fig. 3.) In an ideal case, where the output impedance and the input impedance are both 500 ohms, a volume control designed so that it will always present an impedance of 500 ohms, regardless of its setting, is used. (Fig. 3A) But the amateur is not likely to have the necessary constant impedance volume control, and in that case he may wish to use an ordinary potentiometer, or more properly a voltage divider, to control the volume. In Fig. 3, B and C show two circuits using potentiometers as volume controls. One of the circuits, B, will work quite well and the other, C, will work with greatly increased distortion at low volume levels. For our explanation we shall assume that amplifier A has an output impedance of 2000 ohms and that amplifier B has an input impedance of 5000 ohms. If we connect a 5000-ohm potentiometer as shown in B the smallest load resistance (2,500) will be offered to amplifier A when the control is set for maximum volume. Turning the control to decrease volume will lower the resistance in the input circuit of amplifier B and, at the same time, increase the load resistance on the output of amplifier A. Lowering the reflected impedance at the grid circuit of amplifier B will not cause any serious difficulty, since loading up the grid of a tube does not result in distortion (qualifications omitted). Increasing the load resistance on amplifier A output will decrease output and decrease distortion.

In circuit C, however, the load resistance on the output of amplifier A will be *decreased* as the control is turned to reduce volume. The resulting *decrease* in the reflected load resistance on the output of amplifier A will *increase distortion.* Clearly, the distortion produced at low volume adjustments must be very great.

Observance of these simple rules of impedance matching will eliminate serious distortion in the coupling of audio circuits.

Economical Use of a Milliammeter

(Continued from page 29)

if calibrated is quite as good as those sold for the purpose.

Now that we have the milliammeter arranged so that it will do all the measurements, we may fix up one meter for each purpose, or we may use one meter for everything by suitable arrangements of jacks and plugs. Many other uses for the meter with its attachments may be devised, and also many other ways of connecting it to the apparatus to be measured. A pencil and paper will aid you to get the arrangement you want, for anyone can do it.

Announcing the A-1 Operator Club

TO BECOME a member of the "A-1 Operator Club" you must be nominated by an operator who already "belongs." The list of "charter members" appears herewith. Each operator listed is being requested to submit his nominations of "A-1 Operators." When the club gets under way it is hoped that enough nominations will be received so that it will be possible to require *more than one* nomination for each operator before he is admitted. Lists of new members will appear in *QST*.

In choosing operators for the "A-1 Operator Club" the following points will be used: (1) General keying. Well formed characters and good spacing will be considered before "speed." Similarly, good voice operating technique, clearness, brevity, coöperation with other operators, careful choice of words, etc., may be used as criteria in nominating 'phone operators. (Special extra credit may be given for use of standard word-lists in identifying calls and unusual expressions.) (2) Procedure. Use of correct procedure is a natural qualification. This applies to both general operating and message handling. (Procedure as recommended by A.R.R.L. in the R. & R. and the *Handbook* is a good standard.) Long CQs, unnecessary testing, long calls without signing, too much repetition when not requested, and all other such poor practice, are grounds for disqualification. (3) Copying ability. This to be judged by proficiency in copying through QRM, QRN and other difficulties, and accuracy of copy, as well as by ability to copy at fast speeds. (4) Judgment and courtesy. The "CUL 73" type operator can never make the grade. An operator should be courteous and willing to consider the

(Continued on page 42)

A Home-Made Photocell

By Harley Iams*

IN the last few years photocells have been used more and more frequently for commercial and experimental purposes. These cells have the property of passing an electric current which varies in proportion to the amount of light which falls upon them. Commercially they are used for such varied purposes as talking movies, picture transmission, recording density of smoke from a smokestack, counting articles, and grading them according to color. Those who have wanted to do some experimenting with things involving

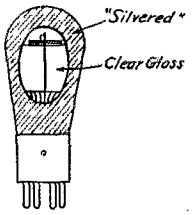

FIG. 1. — THE "SILVERING" IS CLEARED FROM PART OF THE ENVELOPE BY CAREFULLY HEATING THE GLASS
The volatilized light-sensitive material deposits on the plate and forms the cathode of the photocell. The grid and filament are connected together and constitute the anode.

light-sensitive devices, as television and picture transmission do, have sometimes hesitated because of the cost or difficulty of obtaining the photocell. It has been found that one can be made easily from an old Type '01-A tube.

Before speaking of the way of making the conversion from the '01-A to the photocell, it would be well to have in mind the essential features of a photo-electric cell. It is ordinarily composed of two

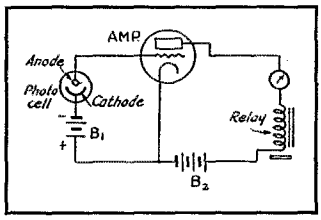

FIG. 2. — A SENSITIVE CIRCUIT ARRANGEMENT SUITABLE FOR SLOW OPERATIONS

electrodes in a vacuum or inert gas. One of these electrodes, the cathode, is made of or coated with a material which emits electrons when exposed to visible light. The other electrode, the anode, is given a positive charge by means of a battery; it attracts the electrons which have been freed by the light. The flow of electrons from the cathode to the anode constitutes the current through the photocell. Some of the materials sensitive to visible light are: sodium, potassium, rubidium, cæsium, together with certain of their alloys, oxides, hydrides, etc.[1]

The '01-A tube can be made into a photocell because the silvery coating inside the glass, deposited there in the process of "getting" to improve the vacuum, happens to be light-sensitive and can be volatilized by heat. All that is necessary is to heat the glass slowly and carefully over a gas flame at a point opposite the filament support. The active material is driven from the glass, and it condenses on the plate which is still cool. When the glass has been cleared of all the silvering in a spot about an inch in diameter, the tube is allowed to cool slowly and the job is done. The finished photocell is shown in Fig. 1. The plate of the tube serves as the cathode, while the grid and filament connected together become the anode. The light which is to operate the cell is concentrated on the plate.

The following precautions are worth considering. Choose a tube which has a clear, silvery color. A smoky white color on the interior of the glass often indicates the presence of air, which spoils the tube as a photocell. Choose a tube which has

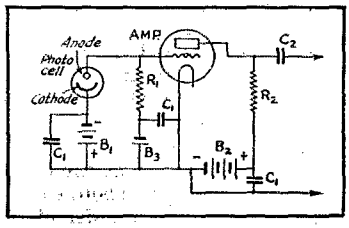

FIG. 3. — THIS TYPE OF CIRCUIT IS MORE SUITED TO ALTERNATING CURRENT AMPLIFICATION
Light-current variations occurring at audio frequencies can be amplified with little distortion.

a minimum of electrical leakage between the plate and the rest of the leads in parallel. The current due to the photo-electric action is, at best, only a few microamperes, and any appreciable leakage will mask the desired effect. Do not try to clear the "silver" from too big a spot on the glass. The volatilized material is deposited on everything cool inside the tube, including the press where the wires go through the glass. Any great amount left at this point will make a tube with too much leakage.

Of six Type '01-A tubes tried, four made good

* 5105 Hawley Blvd., San Diego, Calif.

[1] Two excellent books on photoelectric cells are *Photoelectric Cells*, by Campbell and Ritchie (price, $4.50); and *Photocells and Their Application*, by Zworkin and Wilson (price, $2.50). Both are obtainable from the *QST* Book Department. — EDITOR.

photocells. The best was an old Radiotron mounted on a metal base. One of the two poor tubes was a "bootleg" variety, in which the silvering looked a dirty grey, like old solder. The other had too much leakage at the press because of excessive "silvering."

SOME PRACTICAL CIRCUITS

The voltage to be used on this photocell is not critical. Any voltage from 3 to 150 will give good results. Probably saturation current is reached at about 20 volts, and little is to be gained by using more. If the filament of the tube has been burned out so that the filament support cannot be used as part of the anode, or if the other side of the plate is illuminated, higher voltages will be needed.

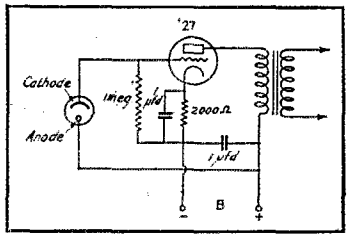

FIG. 4.— REVERSING THE PHOTOCELL AND BATTERY POLARITIES PERMITS USING THE AMPLIFIER B SUPPLY ON THE PHOTOCELL

If this photocell behaves like most of them, it is more sensitive to violet and blue light than to red. It is to be expected, then, that better results will be had when it is lighted with daylight or a Mazda lamp than with a carbon filament lamp or one red from undervoltage. No photocell is very sensitive, and the home-made ones are considerably less so than the better ones available on the market. The photo-electric current to be expected is of the order of two *microamperes* when the cell is lighted with a 100-watt lamp one foot away. In other words, there would be about a two-volt drop across a one megohm resistor in the circuit, for the illumination mentioned. It is evident that at least one stage of amplification will be needed to get any practical use out of the cell. For television uses, six stages after the photocell is common.

Three circuits for amplifying the output of the photocell are given. If it is to be used for a purpose in which there is a second or so in which to act, as in operating a relay, Fig. 2 will give the highest amplification. Since the grid of the amplifier tube is nearly free, hum may be troublesome when using an a.c. type of tube. It can be reduced by shielding the grid and photocell from a.c. and grounding the center tap of the heater. If the circuit must act quickly, a grid leak is necessary. Fig. 3 represents the first stage of a television amplifier. If it is desired that illumination increase the plate current of the amplifier tube, rather than decrease it, the polarity of battery and photocell can be reversed as shown in Fig. 4.

The photocell made from an old Type '01-A tube is cheap and easily obtainable. A tube so converted is not spoiled for use in a radio set. While not particularly sensitive, a photocell so made will find many uses with a stage or more of amplification. It is well to remember that the photo-electric current is very small, that good insulation is needed, and that care and patience are essential when dealing with light-sensitive devices.

New Zealand's Tragic Earthquake

(Continued from page 25)

ZL2AC was on the air day and night with inquiry traffic to Hastings, Napier and their surrounding towns. He gave news of the disaster to the Christchurch aërodrome and medical supplies were rushed by plane. All communication lines from Gisborne to Napier had been destroyed by huge earth slides. A government plane service was established between these two towns and ZL2AC acted as local airport contact station with the call FP18.

ZL2XP of Wellington, went to Napier with a portable outfit and did splendid work with it on 7 mc. with ZL3AW, ZL3AD and other stations. He handled a vast amount of press and general traffic.

In Palmerston North, ZL2AX also contributed great assistance during the early period of the disaster. Another station which assisted was ZL1BG of Rotorua, from which constant contact was maintained with the affected areas. Among the stations which performed valuable work were ZL2BG, ZL2BO, ZL2CR, ZL2GD, ZL2GK, ZL2GP, and ZL2DN. Many other stations, of which there is no definite record, gave splendid coöperation and all showed the real amateur spirit in putting service to the community before all else. Both the press and the public voiced the appreciation in no uncertain terms. Because of the work accomplished in this crisis it is quite certain that amateur radio in New Zealand has been given a vigorous fillip.

Photographs courtesy New Zealand Illustrated Weekly.

IMPORTANT NOTICE

When sending in a change of address notice in connection with the delivery of your monthly copy of *QST* kindly give us ample notice. Wrappers for this issue, the May number, were prepared on April 10th. Each month they are prepared this far in advance. Most magazine publishers require such notice from four to six weeks in advance, and if they don't receive it the subscriber is apt to lose one or two issues. Our policy is a more flexible one, as we wish every member to receive each issue of *QST*. However, we solicit your coöperation.

The Relay Rack in Amateur Construction

By G. Robt. Mezger, W2BLL*

AT SOME time or other, every amateur has had the desire to give his station the prized appearance that is reputed to accompany all commercial installations. In past amateur designs, the first thought toward making the station presentable was the installation of a so-called "rack"—a four-posted frame which ranged through all sizes from small two-panel table models to large affairs that took up a whole corner of the room. The trouble with the four-posted "rack" is that it is big and clumsy, and in spite of the accessibility which its proponents claim it offers, still leaves the constructor very much wrapped around equipment when something goes haywire and a condenser discharges through him.

For the amateur who has to locate his equipment in the least possible space the true relay rack (no doubt the origin of the term "rack" applied to the four-poster) offers several advantages. The area required by the relay rack is approximately 20 by 16 inches. The compactness of relay racks enables the operator to have all equipment under control with a minimum of lost motion in adjustment. Probably most important of all, however, is accessibility. There are no posts in the rear to get in the way. Each unit is independent; it takes but a few minutes for the entire unit to be removed for servicing, and the other equipment is not disturbed. Appearance of the entire station will be improved because everything has a definite place and is kept there.

STANDARD RELAY RACK DIMENSIONS

The standard relay rack consists of two three-inch light-weight structural-steel channels, separated by and welded to bars at the top and bottom to make a rectangular structure. It is supported by steel angles, by lag bolts into the floor, or both; steel angles are usually sufficient for amateur purposes. The secret of the universality of the relay rack is in drilling the panel-mounting holes in the channels, the standard dimensions being shown in Fig. 1. Panel space is provided in multiples of 1¾ inches, each 1¾ inch being called a "rack unit." All panels are made this height or a multiple of it. Holes are alternately spaced 1¼ inch and ½ inch. The rack unit begins and ends half-way between the holes having half-inch separation. The holes are tapped to take 10–24 machine screws of a length dependent upon the thickness of panel used.

A relay rack panel which has been properly drilled and slotted can be turned upside down or backside front or moved up and down and always will fit the rack. It is here that the relay rack lends itself so well to amateur construction. When a new piece of equipment is added an entire new layout is not necessary; all the units can be raised the panel height of the new equipment and everything will fit perfectly. For example, if a low-power buffer stage is to be added to an existing transmitter, the unit can be slipped in between a low-power and a medium-power buffer stage or final amplifier.

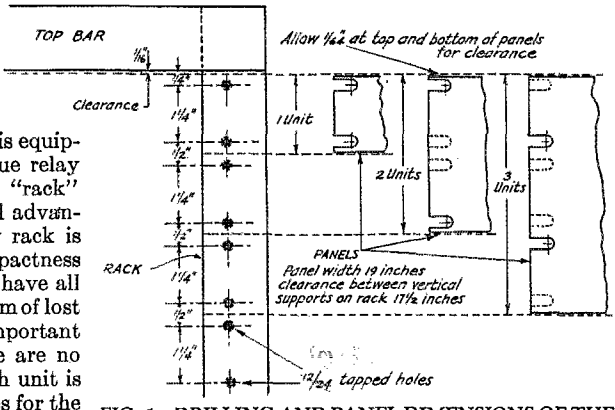

FIG. 1—DRILLING AND PANEL DIMENSIONS OF THE STANDARD RELAY RACK

Since all panels are to be interchangeable, care must be used to cut the edges exactly square, otherwise the panels will not match when equipment is shifted around for changes in transmitter layout. The panels in use at W2BLL are made of fir, with breadboards for the baseboards. A clearance of one inch is left between the bottom of the panel and the bottom of the baseboard to provide space for wiring and small parts such as resistors and condensers. If one is very fussy about appearance, the screws holding the baseboard can be counter sunk and the holes filled with putty or plastic wood. When this has been done, the screws are invisible and the smooth surface of the panel is maintained. It is not advisable to mount the baseboard flush with the bottom of the panel, since in that case any wiring underneath will protrude into the area allotted to the unit below.

BASEBOARD BRACING

The chief problem in relay-rack construction is that of supporting the weight of the equipment on the baseboard. No corner posts rise vertically from the floor at the rear to help carry the weight,

* 4 Park Place, Troy, N. Y.

so it becomes necessary for the panel to support the entire load. Since the simple panel-baseboard assembly is not strong enough to support much weight, it is necessary to provide bracing between the rear edge of the baseboard and the top of the panel. One method is to use ordinary shelf brackets mounted in an inverted, or "L," position, one arm extending vertically along the rear of the panel, and the other horizontally along the baseboard. Another way of handling the load would be to run a wire from the top of the panel to the rear of the baseboard, using a turnbuckle to adjust the tension. Pieces of strap iron or brass carpet stripping could also be used.

"DISH" CONSTRUCTION

Braces are a nuisance to construct, however, and invariably get in the way when servicing is

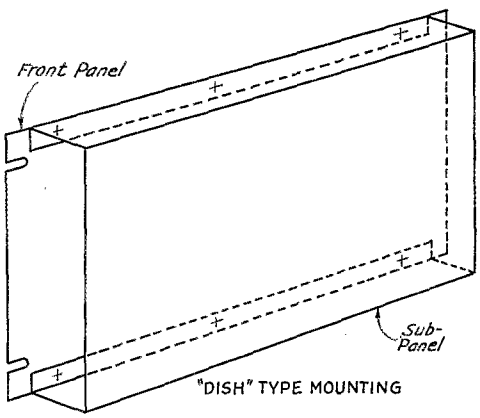

FIG. 2—THE "DISH" TYPE OF SUB-PANEL MOUNTING

The chassis on which apparatus is mounted is vertical. This type of construction eliminates the necessity for horizontal baseboards with attendant bracing.

necessary. A much better method, especially for light-weight equipment, is the "dish" type of construction shown in Fig. 2. This gives all the advantages of mounting equipment right on the panel, and still permits sub-base wiring. The sub-panel need only be separated from the front panel by a distance great enough to allow room for condensers, resistors, and wiring. Tubes can be mounted horizontally. This is likely to give rise to much discussion about filament sag but it is not likely that sag will be troublesome in small tubes, especially when the filaments are mounted in a vertical plane. Sockets are available for mounting large power tubes at right angles to the socket support to put the tube in a vertical position. Tuning condensers can be mounted on the sub-panel or "dish" with their shafts extending through to the front. Conversely, neutralizing condensers can be mounted on the front side of the "dish" with their shafts sticking through to the rear, and since the way is clear here they can be very easily adjusted for a more or less permanent setting. Tubes and plug-in coils can be replaced from the rear with a minimum of effort.

PORTABLE UNITS

Another type of mounting which may prove very popular now that portable equipment is coming into its own is illustrated in Fig. 3. This particular amplifier is intended both for pick-up work in the field and for operation in fixed locations. The notable feature is the design of the mounting brackets, which are fixed in the relay rack at all times. When used in a fixed location, the amplifier is fastened to these brackets by the single screw on either side of the panel at the bottom. For portable use, these two screws are removed, and the amplifier is carried by the handle embedded in the top cover. The protective cover for the front is shown in back of the amplifier in the photograph.

A more common arrangement for portable use is to mount two wooden posts in the carrying case; the equipment is then taken from the rack and fastened to the posts in the same way as to the rack. This should provide a place for portable equipment during the winter months. The portable equipment can have the appearance of the fixed station equipment, and when located on the rack can be operated as conveniently as the fixed station.

CONNECTIONS BETWEEN UNITS

All connections between panels in relay rack construction can be safely located inside the steel channels. A good method is to cable all leads with light twine rubbed thoroughly with paraffin, using half hitches throughout the length of the cable about every half inch all the way up the channel and at every point where a wire or group of wires is taken off to go into a stage. This keeps the leads out of the way so that they will not spoil the neat appearance of the transmitter.

In order that any unit may be quickly removed from the rack for servicing or for portable use, some method must be provided for easily disconnecting all leads from the unit. The leads from the cable may run to a row of Fahnestock clips or to a tube-base plug fitted into a socket mounted on the baseboard near the steel channel. The Fahnestock clips are rather unsatisfactory because if mounted close enough to the iron channel to make the cabled leads short, they are hard to unfasten since there is no space left for the hand. If moved farther out, the cabled leads running along the edge of the baseboard are rather unsightly. The method of using plugs and sockets from the cable to the units is very satisfactory. The amplifier in Fig. 3 has a very neat terminal board on its right side carrying connections for microphone and power. For units not intended to be removed frequently, it would seem that the

connection block illustrated on page 35, *QST* for May 1934, would be admirably suited to the purpose. It is cheap, it can be disconnected in a reasonable amount of time, and is neat in appearance.

SHIELDING

In contrast to the old four-posted rack, shielding on the relay rack is a simple matter. The four-posted rack demanded that each stage be put in its own box and this box mounted on the baseboard holding the stage. When repairs were in order, it was quite a problem to disconnect the wires running into the shield can and remove the can from the shelf. With relay rack construction it is still of course necessary to enclose each stage unless one intends to use a modified form of shielding in the shape of a single baffle plate between stages. A steel front panel can be one side of the shield can; if a wooden panel is used it can be backed with aluminum, steel, or copper. The other five sides of the shield can are then formed by a light metal dust cover. These are available on the market in standard sizes to fit relay racks and are priced very reasonably. This dust cover is mounted on four brackets extending horizontally rearward from the corners of the panel. It is slipped on and off from the rear. It encompasses everything, the above-panel equipment, the sub-panel, and the sub-panel equipment. There is no way for connections to get mixed up. For servicing it is not necessary to tear everything from the rack, since the dust cover can be slipped off and the unit given an inspection without breaking any connections. This is a far cry from some of the four-posted mountings the writer has seen, where it was necessary to break all leads to the oscillator stage and remove the shield can from the shelf just to try a different grid leak.

Since dust covers are cheap and do not in any way complicate construction, they should be very effective for putting that last finishing touch to the transmitter. There is a more practical vein in their adoption, too—the dirt that gathers so effectively on equipment, especially between condenser plates, is excluded.

PANEL LAYOUTS

In laying out a relay-rack mounted transmitter, it will be found that much panel space can be saved if the radio-frequency stages do not have their panels cluttered up with a lot of meters. The average radio frequency stage can be very easily run along the 17½ inches of clear space on a two rack-unit panel if meters can be omitted. Some modern construction eliminates all meters from the panels of the amplifying stages and concentrates them in a single meter panel. This does not usually represent any wiring difficulty if the meter panel is located directly below the first radio-frequency stage of the transmitter, with all power supply equipment below it. The leads from the power supplies then pass right by the meter panel in going up to the r.f. stages, and it is a simple matter to tap the leads at the meter panel to read voltages and currents.

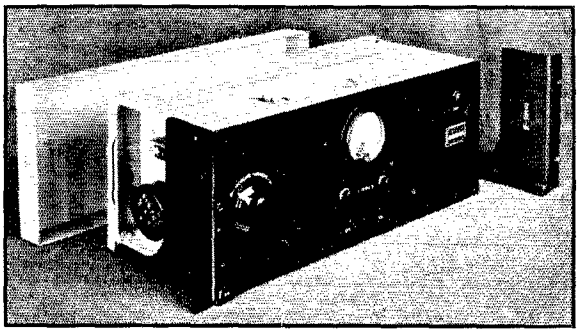

FIG 3—SPECIAL MOUNTING BRACKETS CAN BE USED FOR UNITS INTENDED FOR BOTH PORTABLE AND FIXED SERVICE

In this amplifier, made by Western Electric, the mounting brackets are permanently fixed on the rack. The unit can be removed quickly by taking out the two machine screws which hold the panel in place on the brackets.

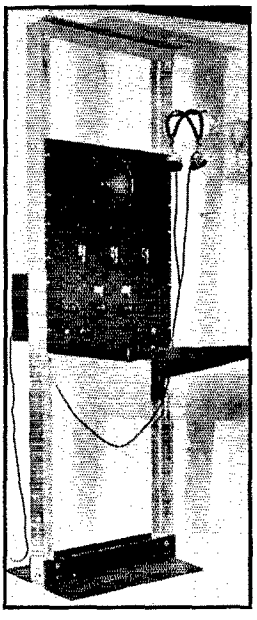

FIG. 4—THE RELAY RACK SERVES AS A NEAT AND EFFECTIVE OPERATING POSITION, AS EVIDENCED BY THIS PHOTOGRAPH OF ONE IN USE AT W2BLL

The desk leaf provides plenty of room for keys and writing materials.

Concentration of meters in one panel also offers a definite safety advantage. When tuning a transmitter it often occurs that when one is working on one stage something goes wrong in one of the others. If the meters accompany their respective stages the meters on one panel can bob around and not be noticed. When a meter panel is used, however, the entire transmitter is under observation when anything is touched because all indicators are concentrated in a small area. Any stage can be tuned or adjusted and the reactions on all other stages can be immediately detected without the operator shifting his position. Naturally radio-frequency meters can not be

mounted on the meter panel since it would be inconvenient to run heavy radio-frequency leads, and excessive losses would be introduced by their length and proximity to the steel channel. An exception to this can be made in the case of r.f. meters with external thermocouples.

OTHER USES FOR THE RELAY RACK

The relay rack need not be restricted to the transmitter. It makes an admirable operating position, especially when space is at a premium. The rack-mounted operating position of W2BLL is shown in Fig. 4. The desk attachment is a red cedar leaf supported by steel brackets. The receiver was made with a special panel for relay rack mounting. Vibration is so low that it has been quite easy to copy code on the typewriter when it is set on the desk attachment on the rack. The panel above the receiver holds three switches for controlling the transmitter. The upper panel carries the loud-speaker. If desired, another blank panel could be backed with celotex and added above the speaker panel to give a greater baffle. By moving the loud-speaker panel directly below the desk, room would be left on the rack for microphone and speech amplifier stages and for a frequency meter. A mixing panel could also be mounted here if relay work such as described in July 1934 *QST* is to be carried on.

The relay rack also has certain definite disadvantages which might be well worth mentioning. The chief trouble is in the construction of equipment. All panels of the various units must be exactly square, and must be cut to the proper height within 1/64". This is a rather close tolerance for amateur work, and unless it is adhered to within reasonable limits, there will be trouble in fitting equipment together when it is changed around, and there is danger of unsightly cracks between panels. Relay racks are also heavy. The rack itself is not light, being made of steel, and so much equipment can be concentrated upon it that an entire transmitter, although very small, seems quite fixed. The rack is definitely not for portable use.

The big item of cost in the relay rack is in the machining of the mounting holes. They must be very accurately drilled and tapped or the rack is useless. Slotted relay-rack panels can be purchased at practically the same price as ordinary blank panels. This eliminates all the trouble of squaring up the panels to make them match properly.

The relay rack, then, offers the amateur an effective way of dressing up his station to give it the appearance he desires; and yet it retains sufficient flexibility to adapt itself to change without notice—an essential in all amateur installations.

It might seem at first that the general adoption of relay rack construction would lead to an undesired monotony. The standardization, however, is merely upon physical dimensions; there are so many other variables in amateur work that this should prove an advantage rather than disadvantage. It should give us something constant upon which to base our designs and thereby increase the flexibility of them.

The International Air Race

RADIO amateurs will be given the opportunity to shoot at a world's record for communication with aircraft during the MacRobertson International Air Race from

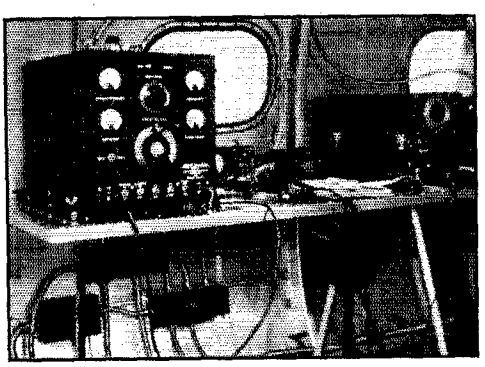

London, England, to Melbourne, Australia, beginning October 20th. Mr. Reeder Nichols will be radio operator on the Boeing 247D to be flown by Colonel Roscoe Turner and Clyde Pangborn. The radio gear operates on sixteen different frequencies, eight of which are crystal-controlled on high frequencies. The ninth position of a switch mechanism throws in the low-frequency band, which is tunable from 296 to 507 kcs. The c.c. frequencies are 3105, 4140, 5520, 6210, 8280, 11,040, 12,420, 16,560. Low frequencies are 315, 333, 375, 417, 457, 500 kcs. All communications with amateurs will be on either 6210, 8280 or 12,420 kcs. The transmitter delivers 160 watts c.w. into a three-quarter-wave trailing antenna. Operator Nichols plans to listen for United States hams on both the 14- and 7-mc. bands. He will advise in his CQ whether to answer on 7 or 14 mc., depending on which frequency seems the best. Information as to call signal assigned to the plane and further details will be included in addressed messages to amateurs from W1MK and stations of the A.R.R.L. Official Broadcasting Station system. Here is an opportunity for some real DX work with aircraft! Let's make the most of it.

A Universal Test Unit for the Study of Television Images

Sweep Circuits, Video Amplifier and an Image Generating Tube Combined in a Unique Set-Up

By Marshall P. Wilder,* W2KJL

At this stage the reader of this series of articles will have a general idea of modern television technique together with enough circuit data to permit him to build a complete receiver. The circuit material has been made intentionally very general in nature in order to facilitate the description of the functioning of the various components. We could, at this stage, proceed with a detailed constructional type of article describing a complete receiver. Since regular scheduled transmissions are still (at the time of writing) unavailable and since the sincere experimenter will demand a still more detailed understanding of practical circuit and adjustment procedure, we have decided to devote this article instead to the description of what can be considered a universal experimental set-up, built around inexpensive equipment and suited for use either as portion of a receiver, as a "test set" capable of producing a complete picture signal for the adjustment of receiving apparatus, or as the basis of an experimental transmitter.

This experimental equipment is built around a most fascinating device, recently perfected for television work, which is actually a test picture generator tube. The device, under the name "Monoscope," was described by Mr. C. E. Burnett of RCA at a recent convention of the Institute of Radio Engineers. The original tube was a very beautiful affair designed for use in the testing of commercial studio and transmitter equipment and was rather out of the reach of the amateur. The very great usefulness of this device, however, has led other manufacturers to undertake development work aimed at the production of a small and inexpensive unit. Two such tubes under development are the "Monotron" of National Union and the "Phasmajector" of the Allen B. DuMont Laboratories.

These test picture generator tubes consist essentially of an electron gun similar to that used in conventional cathode-ray tubes. This gun focuses a beam of electrons upon an aluminum disk mounted in the position ordinarily occupied by the fluorescent screen of a cathode-ray tube. The picture to be reproduced is printed on this disk. The electron beam is deflected with normal sweep circuits and as the beam crosses the picture, variations in secondary emission from the picture disk result. The secondary electrons emitted are either gathered on a conductive coating inside the tube or on a special collector element, and the video output voltage is obtained either from the picture plate or from the collector.

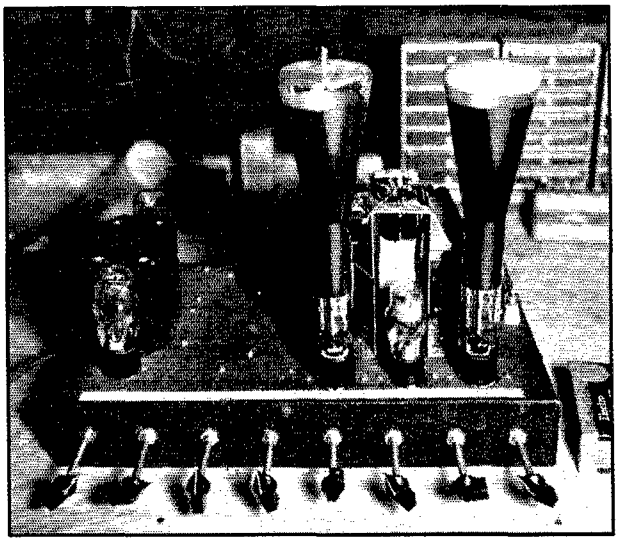

THE COMPLETE PICTURE GENERATING EQUIPMENT TOGETHER WITH A VIEWING TUBE: AN EXPERIMENTAL SET-UP OF THE EQUIPMENT DESCRIBED

Power supplies for the video amplifier, the sweeps and generating and viewing cathode ray tubes are at the left. The video amplifier (with one tube upside down to shorten wiring) is between the C.R. tubes. Sweep circuit gear is at the right rear. The plentiful controls are, of course, to facilitate experiment.

The output of the device is surprisingly high and the gain of an amplifier used to bring the signal up to a sufficient level to operate the control grid of the C.R. tube need not be greater than 25.

* 55 Kendall Ave., Maplewood, N. J.

The important feature of the whole development from the amateur point of view is that we are to have available an inexpensive method of producing a television signal which is certain to be of enormous benefit in facilitating experimental work. No longer need we wait for commercial transmitters nor, for that matter, need we give up hope of participating in television experiment just because we live beyond the range of the transmitters now operating. Even when we do have a commercial signal available, the new picture tube will make available a test picture of fixed and known quality with which accurate comparative work may be done. It is fortunate also that the necessary associated apparatus is relatively simple. And it is still more fortunate that the equipment built to operate the new tube is all entirely suitable for use in an experimental receiver.

In Fig. 1 is the complete circuit of a picture generating unit. It includes two sweep units, of the type described in the last article of this series, together with a two-stage video amplifier. Also, there is the necessary wiring for the picture tube itself. This unit, with a conventional three-inch cathode ray tube in place of the Monotron, becomes a television receiver by the addition of an r.f. section and a synchronizing pulse separation unit. On the other hand, it becomes a demonstration unit to allow the visual examination of the picture in the Monotron tube by connecting a three-inch cathode-ray tube to the 1000-volt supply, providing a separate voltage divider for focusing, then connecting the control grid of the cathode-ray tube to the output of the video amplifier. The output of the sweep circuits is connected, of course, both to the deflecting plate in the Monotron and in the cathode-ray tube.

Examination of the circuit will show that the sweep unit and the video amplifier correspond very closely to the circuits given in previous articles. Also, the arrangement of the Monotron portion follows exactly conventional cathode-ray tube practice. The only unconventional feature is in the arrangement used to extract from the sweep circuit suitable pulses for synchronizing and blanking. These pulses are obtained from the plate of the second tube in each sweep unit. In order to avoid interlocking between the two oscillators and to insure proper mixing of the two synchronizing pulses, the pulses are passed through a double diode before being mixed. They are then fed directly to the control grid of the Monotron in order to prevent the generation of any video voltage during the return traces of both sweeps. If this were not done, the video voltages would cause irregularities in the amplitudes of the synchronizing pulses. In order to get these pulses in the output of the complete unit, a small portion of the available pulse voltage is picked off a voltage divider and injected into the grid of the first

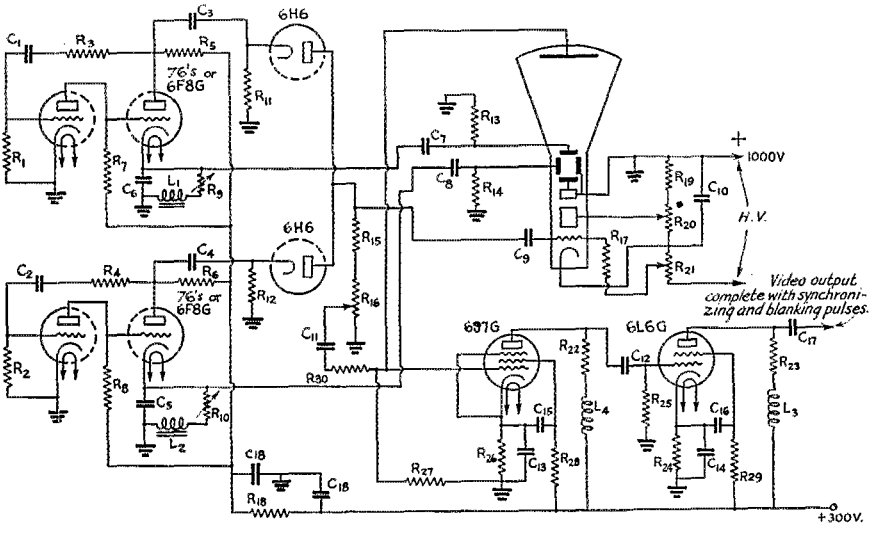

FIG. 1—THE COMPLETE CIRCUIT OF THE STANDARD PICTURE SIGNAL GENERATOR UNIT

R_1, R_2, R_{11}, R_{12}, R_{13}, R_{14}, R_{25}—1 megohm.
R_3, R_4—4000 ohms.
R_5, R_6—2000 ohms.
R_7, R_8—100,000 ohms.
R_9—50,000 ohms.
R_{10}—150,000 ohms.
R_{15}—200,000 ohms.
R_{16}, R_{21}—10,000 ohms.
R_{17}—.5 megohm.
R_{18}—1500 ohms.
R_{19}—150,000 ohms.
R_{20}—75,000 ohms.
R_{22}, R_{23}—2500 ohms.
R_{24}—220 ohms.
R_{26}—1500 ohms.
R_{27}—25,000 ohms.
R_{28}—250,000 ohms.
R_{29}—30,000 ohms.
R_{30}—250,000 ohms.
C_1, C_2—.002 μfd.
C_3, C_4—.01 μfd.
C_5—.2 μfd.
C_6—.001 μfd.
C_7, C_8, C_{12}, C_{17}—.5 μfd.
C_9, C_{10}—1 μfd.
C_{11}—.25 μfd.
C_{13}, C_{14}—50 μfd.
C_{15}, C_{16}, C_{18}—8 μfd.
L_1—100 henrys.
L_2—2000 henrys.
L_3, L_4—100 microhenrys.

video amplifier tube along with the signals from the Monotron. The output of the video amplifier thus contains the picture voltages plus the synchronizing and blanking pulses. In other words, the output of the unit corresponds very closely to that obtained from the final video amplifier in a receiver tuned to a normal television signal. In setting up the equipment it is as well to have a three-inch cathode-ray tube available. This tube is placed in the socket ordinarily occupied by the picture generating tube and the sweep circuits are then adjusted until the usual scanning lines cover the desired area. Some workers will find it worthwhile to add adjustable positioning controls to permit centering the pattern—the necessary circuits being available in many pamphlets and books dealing with cathode-ray tube technique. With this setup the voltages on the cathode-ray tube may also be adjusted to give the desired brilliance and focus. The operation of the blanking pulses can be checked by removing the diode tube, in which case the return traces will be visible on the screen. All of this suggests that the device, in addition to serving its prime purpose of a picture signal generator, is also an excellent cathode-ray oscilloscope. Additional condensers may be provided in the cathode circuit of the sweep units to give a wide variety of frequencies and the video amplifier may be used to provide amplification of the voltage whose waveform is to be studied. Should the experimenter already have a complete oscilloscope it will not be necessary to build the entire rig. One additional sweep unit may be added to that already in the oscilloscope and the only additional item will then be the video amplifier.

In our experimental work the unit shown in the photograph has been used for a variety of interesting jobs. In its complete form it allows, in the first place, a very excellent demonstration of the fundamental principles of transmission. Also, it immediately permits an examination of the capability of both the Monotron and the cathode-ray tube in resolving a television image. The pattern provided on the picture tube is sufficiently complex in its drawing so that it is possible to receive all the details present only if the equipment is excellently adjusted. Incorrect sweep amplitudes immediately become apparent as a distortion in the breadth or height of the image. Poor high-frequency response in the video amplifier is indicated by poor definition on the edges of lines—particularly when they are vertical. Phase shift is indicated by the edges being reversed in color or by the lines themselves being shifted slightly to the right—giving a ghost of the pattern displaced slightly from the original. Then, the ability of the screen, tube and coupling circuit to reproduce good tone values can be tested by observing whether or not any halftones in the original can be duplicated in the final picture.

The unit is essentially a device for facilitating the construction and adjustment of television receivers, but one needs little imagination to visualize it as a source of modulation for a ham television transmitter. Indeed, such equipment has already been used by some of us for preliminary experimental work with considerable success. This is not to say that the day of practical amateur television transmission is here. This gadget permits the transmission of a single picture only and we must await the development of inexpensive Iconoscopes before the reproduction and transmission of moving images becomes possible. It is important to realize, though, that the necessary technique is being given close study and that before very long we shall find amateur television transmission to be not much more complicated nor much more expensive than 'phone transmission is to-day.

In the meantime, we firmly suggest that the television enthusiasts should study and possibly duplicate a unit such as that described. Its operation will give him a very intimate picture of many of the details of television technique which are so difficult to assimilate in any other fashion and will provide him with units suitable for immediate application to experimental reception.

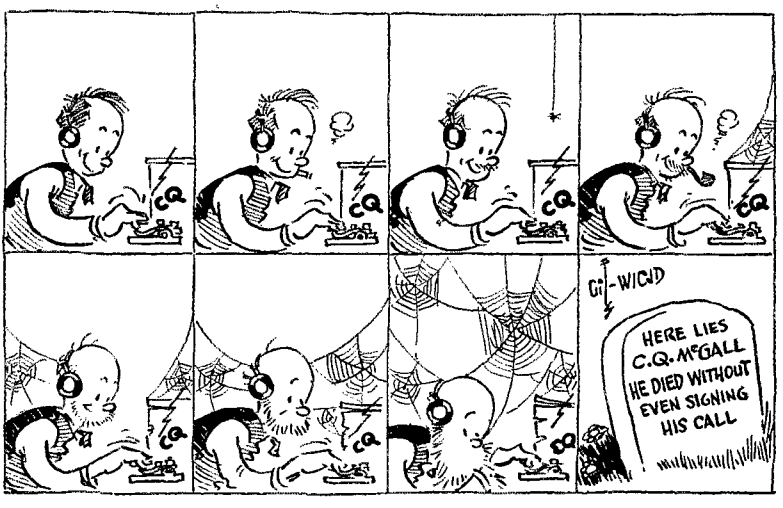

A Homemade Exponential Horn

Increasing the Efficiency of the Small Dynamic Speaker

BY E. E. COMBS, JR.* ex-W6CTN

When the family budget won't stand for two radio receivers in the house, and the ham communications receiver can't be sacrificed for a high-fidelity b.c. receiver, something must be done to keep the little woman happy. We think we have the answer, because, with a half-way decent 8-inch speaker and 2 watts of audio from the receiver, we have b.c. reception worth showing off to the neighbors and — more important — it didn't ruin the budget.

* Box 232, Brownstown, Ind.

Let's first consider the characteristics of the dynamic speaker. Ordinarily, a good dynamic will provide good response up to 5000 cycles and, with a baffle at least 8.5 feet in diameter, is supposed to get down into the lows somewhere around 30 cycles, theoretically. Unfortunately, the baffle arrangement has two disadvantages: the bulky size where space is a premium, and the poor efficiency of the cone of an 8-inch dynamic speaker trying to shake air into activity at low frequencies where our ears are relatively insensitive. The problem, therefore, is to get an arrangement that will get down to the low frequencies without the handicaps of a baffle.

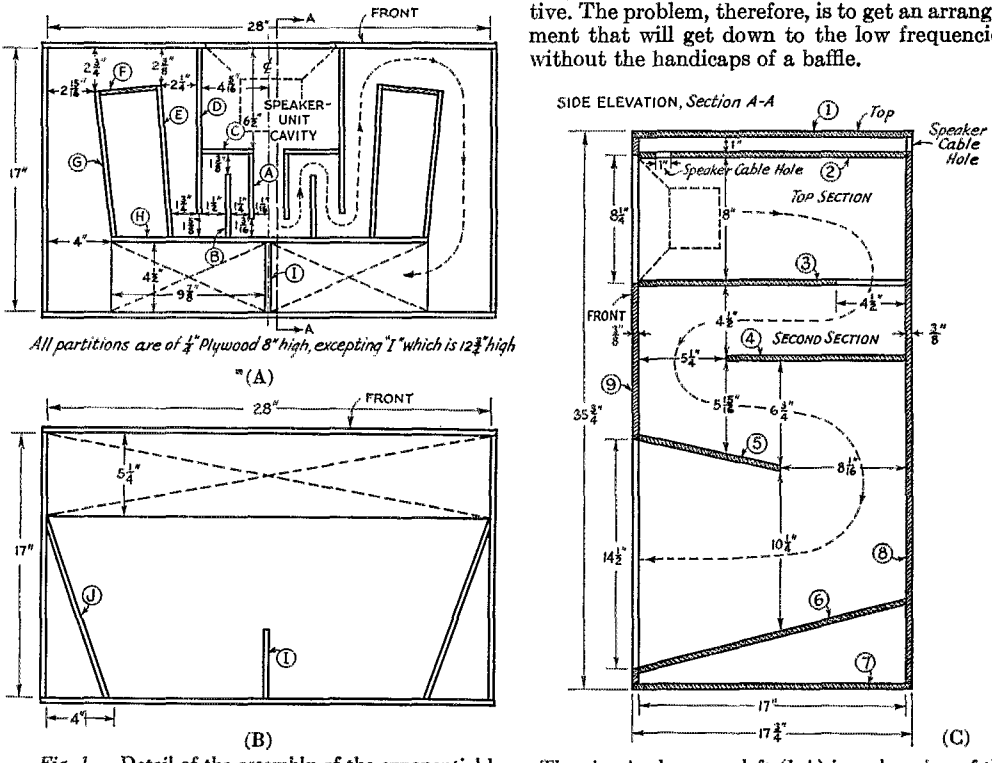

Fig. 1 — Detail of the assembly of the exponential horn. The view in the upper left (1-A) is a plan view of the top section; the plan view of the second section (1-B) is directly below. The view at the right is a side elevation along section A-A.

A — 4 5/16 inches by 8 inches.
B — 4⅛ inches by 8 inches.
C — 3¼ inches by 8 inches.
D — 10⅝ inches by 8 inches
E — 9 15/16 inches by 8 inches.
F — 3 13/16 inches by 8 inches.
G — 9 9/16 inches by 8 inches.
H — 20 inches by 8 inches.
I — 4½ inches by 12¾ inches.
1 — 17¾ inches by 28¾ inches, ⅜-inch thick.
2 — See Fig. 2.
3 — See Fig. 2.
4 — 28⅛ inches by 11¾ inches.
5 — 28⅛ inches by 9 1/16 inches.
6 — 28⅛ inches by 18 inches *.
7 — 17¾ inches by 28¾ inches, ⅜-inch thick.
8 — 28¾ inches by 35 inches, ⅜-inch thick.
9 — See Fig. 2.
All pieces ¼-inch thick unless otherwise noted.

Fortunately, one of the characteristics of the dynamic speaker is that at low frequencies the cone acts very nicely as a piston. As the frequency goes up, the cone finally ceases to act as a unit, with the result that only a small part of the cone around the voice coil is doing the major part of the work. These facts fit our auditory requirements very nicely, for the air is practically incompressible at the higher frequencies and air columns can be set into vibration quite easily. At the extremely low frequencies, the air is compressible to some extent and the sound waves spread considerably after leaving the speaker, resulting in a reduction of the intensity of vibration. At the same time, the ear is much less sensitive to low frequencies, so that it becomes necessary to increase the actual amplitude of the air waves in order to hear them satisfactorily.

There are two common methods of setting a proportionately larger amount of air into vibration at the lower frequencies. The response of the audio amplifier can be adjusted so that the low frequencies are accentuated, but the increased amplitude of the cone movement tends to lead away from linearity, producing some distortion, and such an increase in amplitude takes considerable audio power. The other method is to increase the effective piston area of the cone, thus creating a greater displacement of the air with the same piston amplitude. A large effective area can be obtained either by use of a large dynamic speaker or by using a small speaker with an exponential horn. In considering dynamic speaker sizes, we find that the high-frequency response tends to drop off as the size of the cone is increased. Thus, if we want a speaker large enough for good bass response, we have to sacrifice the highs. On the other hand, an 8-inch dynamic will give us good response up to 5000 cycles and, with the aid of an exponential horn, we can get very good bass response.

The exponential horn has three general dimensions which determine its response characteristics. The throat area coupled with the size of the cavity between the diaphragm and the throat determine the highest frequency that will pass into the horn. The rate of expansion of the horn determines the lowest frequency that will travel down the horn. The mouth area of the horn determines the lowest frequency that will enter into the air without reflection, caused by what might be called a mismatch of impedances.

Interested in taking three watts of audio and an 8-inch speaker and rattling the windows of the room? You'll do that, and increase the fidelity of the overall audio system at the same time, if you build the simple exponential horn described on these pages.

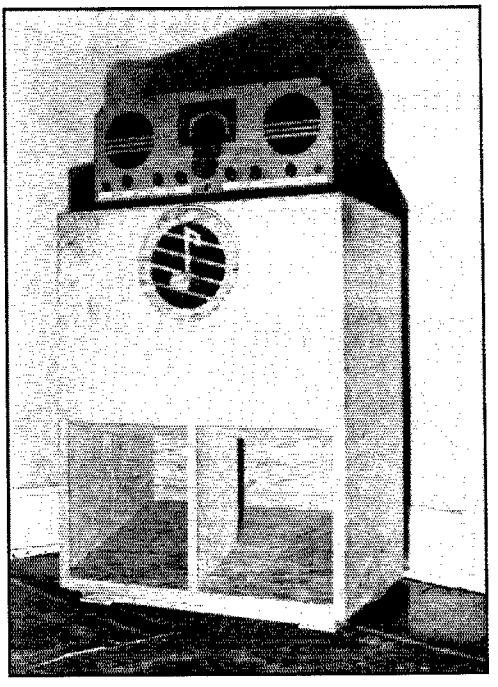

A simple homemade exponential horn with an ACR-155 mounted on top to give an idea of the size of the gadget. The low notes pass through the horn and come out at the bottom — the high notes are radiated directly through the grille at the top.

The dynamic speaker on the ordinary baffle works very nicely down to around 200 cycles before the response drops off, so that a frequency in this neighborhood will be the highest that need pass down the horn. The lowest frequency that we would like to hear (if possible) is around 30 cycles, so this determines our rate of expansion. To keep within reasonable outside dimensions we will make our horn mouth area 385 square inches, which gives a low frequency of 80 cycles before reflection takes place. With these limitations, we can expect to get a low-frequency response such that the lower limit will be between 30 and 80 cycles, depending upon the acoustic characteristics of the room in which the horn is placed. Again referring to the piston effect of the cone, we see that we now have an effective piston area of 385 square inches, which is about ten times the area of the cone of the 8″ dynamic speaker, or equivalent to a 22-inch diameter dynamic speaker.

For those interested in the mathematical design of an exponential horn for a dynamic speaker, reference to the *I.R.E. Proceedings* of October, 1936, and *Radio Engineering* by F. E. Terman will give all the necessary data and references from which calculations can be made.

The photograph gives the general appearance of the finished speaker cabinet which is the ex-

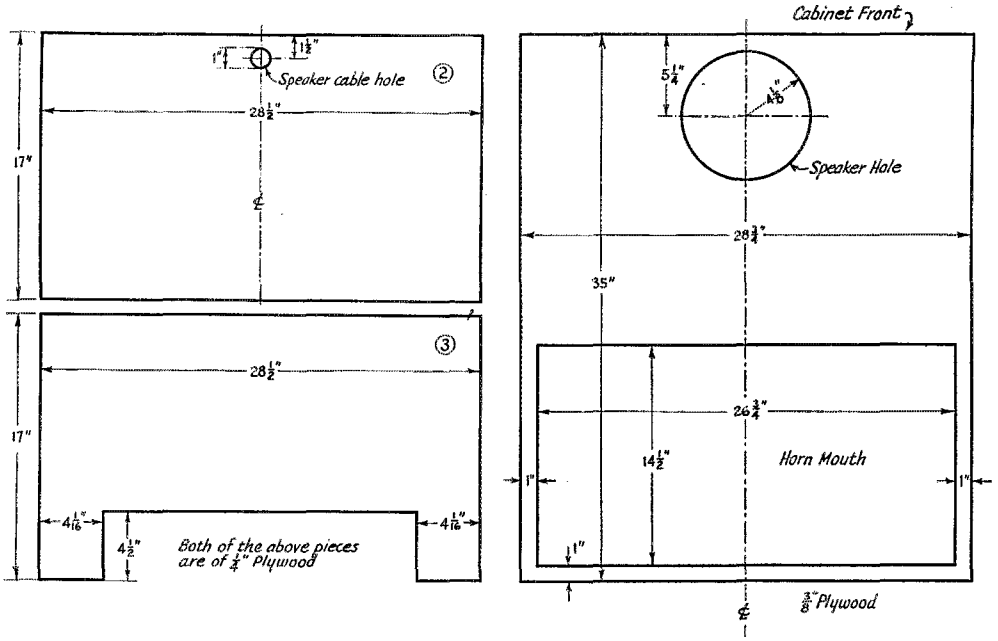

Fig. 2 — Detail of pieces No. 2 (upper left), No. 3 (lower left) and No. 9 (right).

ponential horn in disguise. The ACR 155 was placed on top of it to give an idea of its size. The grilles were left off so that the beginning and ending of the "works" could be seen. With the exception of a 1-inch cavity between the top of the horn proper and the top of the cabinet, the entire space is taken up by the folded exponential horn. The cabinet is arranged so that the highs from around 200 cycles and up come directly from the dynamic speaker and the lows from around 200 cycles on down come through the horn.

Fig. 1-A shows a plan view of the "top section" which also provides space for the dynamic speaker. The partitions are made of ¼-inch plywood. In this section, the horn is split into two paths so that use could be made of the entire space, these two paths joining together again at the back of the top section. Fig. 1-B shows the second section, plan view and Fig. 1-C shows a side view of all sections.

Constructional Details

The tools required to make this cabinet consist of a hand-saw, hammer, plane, vise, chisel and at least two small "C" clamps. The total materials used were two pieces of ¼" plywood 4 feet by 8 feet, a piece of ⅜" plywood 4 feet by 8 feet, some 1 inch brads, and glue.

First, cut all internal pieces to dimension, making sure that all pieces making up the labyrinth for the "top section" are all 8 inches high, that pieces No. 2, 3 and 4 have the same length and that pieces No. 2 and 3 have the same width. The pieces (a) and (c) and (d) are next assembled, using 1-inch brads and glue, making up two units which are identical in shape. Then, pieces (e), (f) and (g) are assembled to give two identical units which are then both attached to piece (h). The positions of pieces (a), (b), (c), (d), (e), (f), (g) and (h) are then laid off on piece No. 3, for both halves, giving a pencil-line outline that looks like Fig. 1-A. Next, nail holes are laid off on piece No. 3 between the lines which are ¼-inch apart, spacing holes about 1 inch from the end of any partition. Lay piece No. 3 on top of piece No. 2 and drill the holes with a No. 50 drill. Alongside the lines drawn on piece No. 3, tack small strips of wood so that the partitions will fit snugly, using enough strips to hold the entire labyrinth in place. Then, put slow-drying glue on the edges of the partitions and on the places where they are to be attached to piece No. 3, and nail the pieces (a), (b), (c), (d), (e), (f), (g) and (h) in place. Now, remove the guide strips and repeat the glueing process on the top edges of the partitions. The piece No. 2 can then be nailed in place, using the nail holes previously drilled, making sure that everything is being attached squarely in place. The "top section" is then complete.

The next step is to attach pieces (j) to piece No. 4. As was done for the top section, first lay off an outline on piece No. 4, to get something that looks like Fig. 1-B, and then mark off the nail holes. Lay piece No. 4 on piece No. 3, which is the bottom of the "top section," and bore the nail holes with a No. 50 drill. Now pieces (j) can be

attached to piece No. 4, first, then to piece No. 3, with brads and glue.

The sides are then laid out with pencil lines to show the outline of the "shelves" that are going to be attached. The results should look like Fig. 1-C for the left end of the cabinet, when facing the cabinet, and the exact opposite for the right side. After the positions of pieces Nos. 2, 3, 4, 5 and 6 are drawn, nail strips of wood, which are straight and as long as the sides are wide, on the outside of the lines. Try a piece of ¼-inch plywood between the strips to make sure that there is a tight fit. Now, with these strips as guides, make sawcuts to a depth of ⅛ inch. Remove the guide strips and chisel out the wood between the saw cuts to get grooves which will take the ends of the ¼-inch plywood "shelves." When the sides are laid out in the above manner, be sure that one side is the exact reverse of the other. When the grooves are finished, lay out and drill nail holes in the manner before described. Beginning with the "top section," glue and nail pieces Nos. 2, 3, 4, 5 and 6 in place. The result will be a rather odd-looking "bookcase" affair.

In the top of the "top section," just over the speaker cavity, is a 1-inch hole to permit passage of the speaker plug and cable. There is another in the back of the finished cabinet for the same purpose. By this arrangement, the cavity between the top of the "top section," and the top of the cabinet serves as a damper against loss of air pressure through the speaker-cable hole in the horn.

The front, back, top and bottom can then be put in place in the order mentioned. By the time you get this far, this latter job will seem comparatively easy.

The speaker opening and the mouth of the horn can be covered with grilles and cloth, or just pieces of bronze fly-screen with simple frames, according to the inclination of the builder. No great detail will be given as to how the speaker is to be mounted for the reason that the outside dimensions of various makes of 8-inch dynamic speakers are not always the same. In some cases, the speaker can be mounted directly on the grille and for others, where the speaker is a bit larger than the opening provided in the cabinet, the outside rim of the speaker can be attached to the outside of the horn. Such details as the above and the cabinet finishing are left up to the individual taste.

The dynamic speaker must be of good quality and it should have a cone central angle of around 90°. Speakers with flatter cones are not able to work against the air-column load without buckling; though the buckling is not audible, the bass is just left out.

General

The results obtained with this horn were more than gratifying. In the first place, the receiver listed among the family properties has only a single 6F6 audio output but it is capable of furnishing all the volume that a home or a small auditorium can stand. In fact, the efficiency of the dynamic speaker seems to have been raised considerably and it is no trouble at all to rattle the windows in the room without running the audio up to the distortion point. This was not possible with the same dynamic speaker on a 3-foot square baffle that was used before the horn was made. The bass response is very good and there are no indications of cabinet or speaker resonance. With normal volume, the throb of a bass drum or bass fiddle is sufficient to vibrate the floor without giving the impression that it is being forced.

Modern Radio Course Resumed

THE novel course of instruction in modern radio principles which has been broadcast in past years over station W1XAL (now WRUL) is commencing its fourth year under the direction of Dr. C. Davis Belcher, well-known radio instructor and former radio inspector. The series is, as in the past, presented by the World Wide Broadcasting Foundation, a non-profit society specializing in educational programs of many kinds.

With four years of successful experience teaching this course by radio, and by utilizing the many suggestions received from listeners all over the world, Dr. Belcher has been able to make the current series of broadcast even more instructive and helpful than before. The course, which runs for an entire college year, is divided into four sections of eight lectures each, with a periodic review for questions and answers from the short-wave audience. Starting November 13th, for example, there will be a new section dealing with the fundamentals of electrical engineering and radio circuits, including the use of storage batteries, microphones and amplifiers.

The lesson broadcasts run for a full hour, during which one complete subject is covered. So popular has the course become that the original Monday night lecture at 10:00 P.M. E.S.T. on 11.73 Mc. is being repeated by electrical transcription on Fridays at 4:00 P.M. over 11.79 Mc., and again the following Monday evening at 7:00 P.M. on 6:04 Mc., for the benefit of additional listeners or those who missed the regular period.

Each student is equipped with a printed lesson book which is mailed to his home when he registers with this unique radio university. The books, one for each of the four sections, are supplied at a cost of one dollar each to cover the expenses of preparation and mailing. Each lesson book is complete with circuit diagrams, charts and radio terms to help the listener follow his instructor. Full details of the course and enrollment cards may be obtained by writing to WRUL-World Radio University, University Club, Boston, Massachusetts.

USING RESISTORS AS R-F LOADS

The practice of testing an amateur transmitter while it is coupled to an antenna is quite common, despite the fact that the F.C.C. frowns on such doings. While testing an antenna system, of course, it is necessary to be on the air, but for most transmitter tests a dummy load is desirable. Use of a dummy antenna not only obviates unnecessary QRM but, if a known dummy load is employed, quantitative measurements of actual power output can be obtained.

The purpose of this article is to explain how to procure a good dummy load, and how to use it.

TYPES OF DUMMY LOADS

Anything which will absorb power and not act as an efficient r-f radiator may serve as a dummy load. As we know, an electric light bulb can be used. As a matter of fact, it is possible to use a tub of salty water as a dummy load. In actual practice most amateurs use either a light bulb or non-inductive resistors.

Electric light bulbs have one big disadvantage, and that is, their resistance varies with the amount of current passing through them. If the resistance of a dummy load is not known accurately, then it is impossible to make any accurate output measurements. However, in the case of the light bulb, most amateurs judge output by the amount of brilliance in the lamp. Unfortunately this can be most misleading, because a large change in the amount of power dissipated may be indicated by an imperceptible change in brilliance.

Non-inductive resistors are perhaps the logical choice for use as dummy loads, if only because they have fewer disadvantages than other types of loads. The cost of these units is surprisingly low, and properly handled, they will be a permanent investment. For this reason all further discussion will be restricted to the use of resistors as dummy loads.

RESISTORS IN GENERAL

Many different types of resistors are currently manufactured, but those in widespread use fall into two general categories: the composition type and the wire-wound type. Composition resistors are seldom used for dissipation of more than 2 watts, although they are available in 5 watt sizes. Wire-wound resistors are available with dissipation ratings up to 200 watts.

Composition types of ¼, ½, 1 and 2 watt ratings are made in resistance values from 10 ohms to 20 megohms. For lower resistance values, these same wattage ratings can be obtained in wire-wound units only. For example, one manufacturer makes ½ watt wire-wound units in the resistance range from 0.47 ohms to 820 ohms.

Wire-wound units can be obtained in resistance ranges from a few tenths of an ohm up to 250,000 ohms, but not all wattage ratings and styles are available over this complete resistance range.

All resistors will not serve as usable dummy loads. Those which are usable are the composition type and the non-inductive wire-wound type. The criteria here is lack of inductance.

A wire-wound ***inductive*** resistor will not serve as a dummy load at radio frequencies because its relatively high inductance will not permit a current flow unless a tremendous voltage is available.

For example, assume that a regular inductive resistor has an inductance of 100 millihenrys, and a resistance of 100 ohms. An inductance of 100 millihenrys at 14 megacycles is an inductive reactance of 9,000,000 ohms! One ampere of current, representing a real power of 100 watts into this resistor, would require that 9,000,000 volts be applied to the resistor. This example assumes that the inductive resistor had zero capacitive reactance, which is not possible, but the example does serve to illustrate why it is difficult to get power into an inductive resistor at these frequencies—unless a difficult tuning job is attempted.

Technical TIDBITS

COMPOSITION RESISTORS

A simple equivalent circuit of a composition resistor is shown in Fig. 12-A, where R is the d-c resistance and C the total capacitance across the resistor. The equivalent circuit will not hold strictly true for all frequencies but it suffices for most generalizations.

At frequencies up to approximately 100 megacycles the inductance may be neglected (except for very low values of resistance). The total capacitance is also low, being less than one mmf (when considering composition resistors in the resistance range below 1000 ohms). The effective capacitive reactance is high enough that it presents no problem.

In other words, composition resistors are good for use at radio frequencies. They will act as though they are a pure resistance—within limits. The main disadvantage of these units is that they are available only in low-wattage styles. This need not be too serious a drawback, as will be explained later.

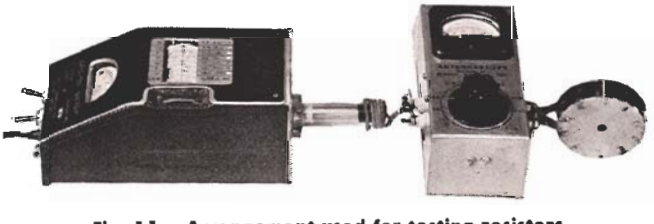

Fig. 11. Arrangement used for testing resistors

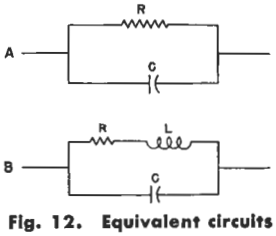

Fig. 12. Equivalent circuits

WIRE-WOUND RESISTORS

Fig. 12B shows the simple equivalent circuit of a wire-wound resistor. This will hold true in a general way for both inductive and non-inductive units, where R is the d-c resistance, C the total capacitance, and L the total inductance. In the case of non-inductive units, L is the residual inductance. However, because of such factors as skin effect and dielectric loss there will be some limiting frequency where this circuit is no longer valid.

As frequency is increased the inductive reactance increases proportionately and the capacitive reactance decreases proportionately. Both of these effects are undesirable. Regular wire-wound resistors cease to be resistors in the true sense of the word at frequencies slightly above the ***audio*** range.

For radio-frequency uses it is necessary to go to the so-called non-inductive resistors. These are manufactured in such a way that the inductance is kept at a minimum. One popular scheme is the Ayrton-Perry winding in which two layers of wire are wound in opposite directions. As an example of what may be accomplished, one manufacturer states the inductance of a wire-wound unit at 66 microhenrys and the inductance of an identical value non-inductive unit at 0.6 microhenrys.

Generally speaking, non-inductive wire-wound resistors are not as good for use at radio frequencies as composition resistors, but the wire-wound units are capable of dissipating a great deal more power, and by the proper choice of unit satisfactory operation may be obtained.

POWER CONSIDERATIONS

Before discussing which resistor to use where, it might be well to consider power ratings. If you have a kilowatt transmitter, with an output of 750 watts, it might seem necessary to have a dummy load capable of dissipating this amount of power. However, this is not true, because it is possible to use resistors (both the composition type and wire-wound type) at several times their rating.

Tests have been made to determine the amount of overload which may be placed on resistors, and the following conclusions may be drawn. A resistor, or resistors of the composition or wire-wound type, may be used at 300% overload if the overload is applied for not longer than one minute, and if a fifteen minute cooling-off period is allowed between successive on periods.

Inasmuch as most tests can be conducted in a sixty-second on period, there is no need to use resistors which are capable of dissipating the full amount of power. As a matter of fact, if it is desirable to use resistors for long test periods, it may be necessary to have a safety factor involved unless adequate ventilation is provided for the resistors. That is, for long test periods, you should use resistors capable of dissipating twice the power you apply to them.

CHOOSING A RESISTOR

Now that we have a general idea of the power rating we may need, let's see what resistors we can use for various power levels.

For measurement or antenna matching work, where you usually use your VFO or a grid-dip meter for a power source, half-watt composition resistors are adequate, power-wise. For impedance values of 50, 75 or 100 ohms, single unit ½ watt resistors are good up through 150 megacycles. For 300 ohm work, a single 300 ohm resistor is not satisfactory, as the effective capacitive reactance starts to show up at 100 megacycles. However, two 150 ohm ½ watt resistors in series are satisfactory up to 150 megacycles.

No tests were made on resistors of more than 300 ohms resistance, but it is obvious that the capacitive reactance will be a factor to be considered, so that higher and higher values of resistance will be "pure resistance" only for lower and lower frequencies.

Dummy loads capable of handling sixty watts (the output of a 100 watt input transmitter) can be made by employing 2 watt composition resistors. Ten 2 watt resistors will dissipate twenty watts, which, with our factor of three employed, allow their use as 60 watt loads. Obviously, these resistors can be placed either in series or in parallel, but tests indicate that it is desirable to make these loads as follows.

For a 50 ohm load use ten 500 ohm resistors in parallel. For a 75 ohm load, use ten 750 ohm resistors in parallel. For a 300 ohm load, use ten 30 ohm resistors in series. All of these combinations give good results as dummy loads up to 150 megacycles.

The proper way to parallel resistors is indicated in Fig. 13. Make two circular disks of copper or brass, and drill ten holes, equally spaced, around the edge of each disk. Mount the resistors between the disks and solder each lead to the disk. If desired, a coaxial fitting may be mounted, as shown, or broad straps may be soldered to the two disks.

If you use a 300 ohm load, the resistors should be in series. The best way to do this is to make two sets of



Fig. 14. Examples of high-power resistors



Fig. 13. Examples of parallel-connected resistors



Fig. 15. Low-power resistor examples

five resistors, each set in a straight line, then connect one end of the two sets together. This brings the two leads of the composite resistor adjacent to each other. All leads in the series string should be as short as possible.

Dummy loads capable of handling 300 watts can be made from ten 10 watt non-inductive resistors. For a 50 ohm load, use ten 500 ohm resistors in parallel. For a 75 ohm load use ten 750 ohm resistors in parallel. For a 300 ohm load, use ten 3000 ohm resistors in parallel. All three combinations are usable to 150 megacycles if the units are paralleled as described before.

Dummy loads for powers above 300 watts can be made in a variety of ways. The best load, as indicated by a series of tests, is a series-parallel combination of 10 watt non-inductive wire-wound units. For example, ten 1500 ohm 10 watt resistors in parallel, connected in series with a similar unit, gives a 300 ohm load capable of handling 600 watts.

Higher wattage resistors can also be used, and tests have been run on all the resistors shown in the photographs. In general, it becomes increasingly difficult to make good dummy loads as the power requirements are raised. Non-inductive resistors with power ratings of 50, 100, 120 and 160 watt ratings have too much residual inductance to be used, singly, at frequencies higher than approximately ten megacycles, unless compensating capacitance is used in series with the resistors.

For example, a typical resistor with a residual inductance of two microhenrys requires a series capacitance of approximately 100 mmf at ten megacycles in order to be a "pure resistance."

Placing these larger-wattage resistors in parallel will decrease the effective inductance, but not sufficiently, unless a large number of them are so connected. They can be used singly, or in pairs, if you wish to "tune out" the series inductance by means of a series capacitance.

USING A DUMMY LOAD

There are a few precautions to be observed when connecting a dummy load to a source of power. One, make as direct a connection as possible, and use low inductance leads, such as copper straps.

Two, keep the dummy load away from metallic objects, in order to avoid an unbalance to ground. Three, keep the dummy load well in the clear so that adequate air circulation is assured.

FINAL NOTES

The information just given on non-inductive resistors is intended as a general guide to the selection of such resistors. Rigorous and complete tests are quite difficult to make, especially when a large variety of resistors is considered. Most of the data given was determined by the test arrangement shown in Fig. 11, which consists of a Millen grid-dip meter and an Eldico Antennascope. This sort of test permits a practical answer to be obtained quite easily.

The wire-wound resistors tested were made by Ward-Leonard, Sprague and Ohmite. These three companies have standard lines of non-inductive resistors which are readily available.

—Lighthouse Larry

Electronic TUBE

Ham News

Available FREE from

G-E Electronic Tube Distributors

Printed in U.S.A.

A Bi-monthly Publication

TUBE DIVISIONS, ELECTRONICS DEPARTMENT

GENERAL ELECTRIC

SCHENECTADY 5, N. Y.

(In Canada, Canadian General Electric Company, Ltd., Toronto, Ont.)

GEO. H. FLOYD, W2RYT—EDITOR

FROM:

Electronic TUBE

Ham News

Copyright 1951, by General Electric Company

MAY—JUNE 1951 VOL. 6—NO. 3



TRANSMITTER TUBE TESTING

Simplified Test Procedures for Popular Transmitting Tubes



TEST INSTRUCTIONS FOR:

GL-2E26	GL-810
GL-4D21/4-125A	GL-811A
GL-4-250A/5D22	GL-812A
GL-35T	GL-813
GL-100TH	GL-814
GL-203A	GL-815
GL-211	GL-829B
GL-592	GL-832A
GL-805	GL-837
GL-806	GL-838
GL-807	GL-8000

GL-8005



Whenever you suspect that a receiving tube is bad, you either plug in a new one (if you have a spare) or you make a trip to see your serviceman friend and use his tube tester. However, when something has gone wrong in your transmitter, you hesitate to try your spare transmitting tube in place of the suspect tube, and you certainly will not find a transmitting tube tester handy.

Or, if the ham in the next block wants to trade some tubes with you, you may end up with some low emission tubes that are good only for future trading with another unsuspecting ham.

All of the above points out the fact that it would be extremely nice to be able to test a transmitting tube when the need arises. It is the purpose of this article to explain how to run some simple (hence non-conclusive) tests on your favorite bottle.

GENERAL TESTING COMMENTS

Vacuum tube manufacturers spend a great deal of time and money in order to test their product completely. A transmitting tube such as the GL-813, for example, may have to pass twenty or more tests before it is considered good enough to bear the G-E trademark. Many of the individual test sets used to run these tests will each be worth more than an elaborate ham transmitter.

Obviously, therefore, any simple tests which the amateur is able to run will not do as complete a job of quality testing as the tests the manufacturers make. IIowever, the simple tests about to be described will permit the ham to roughly evaluate the quality of his transmitting tubes, and in most cases, these simple tests will give a true indication of whether the tube is generally good or generally bad.

It is possible for these simple tests to call a bad tube good, and a good tube bad, especially if the tests are not carefully conducted, but these cases will be the exception, so the following simple tests should give you a wealth of information about the quality of your transmitting tubes.

TUBE TYPES CONSIDERED

Testing instructions are given for most of the popular and widely used amateur tubes (see list above). If a certain type is not included, it is either because the testing would be more complicated and

Contents

Transmitter Tube Testing ..... pages 1–6

Sweeping the Spectrum ..... page 7

R-F Power Indicator ..... page 8

involve special apparatus; or, it is a high-power type not deemed necessary to include.

TEST INSTRUCTIONS

Three different tests are suggested for each tube type. The first is a short and continuity test, the second a static characteristic test, and the third either an oscillation test or a limited peak emission test, depending on tube type. It will be necessary to run all three tests in order to completely test any particular tube.

Run the tests in order. If a tube fails Test I because of an internal short, there is no point in making any further tests. However, if a tube passes Test I and fails Test II, you could still run Test III to see if the tube has any emission, even though Test II showed you that the static characteristic of the tube was poor.

If the tests are to mean anything, you must run them carefully. Use accurate meters. Follow the instructions exactly.

For tests II and III, allow the filament to heat for five minutes before proceeding with the test.

TEST I

The data for Test I is given on page 3. The purpose of this test is to determine filament continuity and to check for undesirable shorts. The base connection diagram for each tube is shown. These diagrams are made looking at the bottom of the tube, with the base pins facing you.

Use an ohmmeter to check continuity. *Do not* use a lamp in series with the a-c line as a continuity indicator, as you may damage the filament of the tube. An ohmmeter with a range of zero to 50,000 ohms or zero to 250,000 ohms, or anything in that range will be satisfactory. It is not advisable to use an ohmmeter scale which will read too high a resistance, such as ten megohms or so, because you are looking for continuity and shorts, and not for leakage.

Check for filament continuity first, then check for shorts by probing between a given pin and all other pins, then another pin against all other pins, etc. If a pin is marked NC, for no connection, check it anyway to make certain no continuity exists. All electrodes, including grid and anode caps (if any), should be tested for continuity or shorts.

Consider a tube to have passed this test if you have filament continuity, and continuity between other electrodes as shown on the diagram—and, if all other electrodes are floating, that is, have no continuity to any other electrodes.

TEST II

The data for this test is given on page 4. The purpose of this test is to determine, approximately, the static characteristic of the tube in question. In other words, it is a check on the controlling ability of the grid (or grids). This test is intended to show up a grid that has been bent out of place due to dropping a tube, for example. Many other small internal faults may also be determined. This test *does not* show whether a tube has low emission, or is near the end of life.

All tubes are not tested in the same manner. One group (Test II-A) must have the grid bias adjusted until the plate current measures a predetermined value, then the grid bias voltage must be read to determine if it falls in the "good" range. The other group (Test II-B) must have the grid bias voltage set to a certain value, then the resultant plate current must fall within a certain "good" range.

The circuit diagram for the test set-up is shown in Fig. 1 on page 4. If the tube you are testing has no cathode, disregard the cathode connection shown. Similarly, if the tube is a triode, disregard the dotted screen-grid lead. (One tube, the GL-837, requires a suppressor voltage. See note B on page 4.)

It is not necessary to construct a separate test set for Test II. You may use a socket in a rig you already have. Just remove, temporarily, the grid, screen grid and plate leads, and connect as shown in Fig. 1. It is desirable to be able to vary the filament voltage, so that it may be set exactly at the voltage specified in column 1, page 4.

To test a tube in the II-A group, apply filament voltage, apply a grid bias which is midway in the specified range, then apply plate voltage (and screen voltage if the tube is not a triode). Check the plate current and readjust grid bias until the plate current is as specified, then read the grid bias voltage you are using. The tube is "good" if the grid bias voltage is within the limits shown.

To test a tube in the II-B group, apply filament voltage, apply the exact grid bias voltage shown, and apply plate (and screen) voltage. Read plate current. The tube is "good" if the plate current is within the limits shown.

TEST III

The data for Test III-A is given on page 5, and that for Test III-B is given on page 6. Seventeen tubes are listed for the former test, and six tubes are more easily tested by the latter test. Test III-A is a power oscillation test, in which the tube is operating at 14 megacycles. Test III-B is a test which checks for the total emission, under the conditions shown, for a very brief moment.

The diagram on page 5 shows the test set-up necessary for Test III-A. This is a Hartley oscillator circuit. Because this test is run at a reduced filament voltage, it is absolutely necessary that a variable control be used in the filament circuit. This control need not be an autotransformer, as shown, but some sort of stepless control is needed.

In the circuit diagram for this test, the 0.005 mf condensers must have a voltage rating consistent with the tube being tested. They should be capable of handling the d-c plate voltage (E_B) plus some safety factor. The 0.005 mf condenser in the screen circuit should handle the d-c screen voltage (E_S), plus a safety factor. The two 0.002 mf condensers should be rated at 400 or 600 volts breakdown.

The tank coil should have an inductance of approximately 5 microhenrys. A regular 20 meter transmitting coil will serve, as long as the wire in the coil is bare, so that the proper point for the tap can be located.

If you already have a transmitter using the tube in question, it is not necessary to provide an oscillator circuit, as you may use the tube as an amplifier and run the test. In this case the tube must be run at as high a plate (and screen) voltage as specified, else the results will only be valid for the lower voltage you use.

To run Test III-A, put the tube in the circuit as shown, and turn on the filament, setting the control to give normal voltage. Make certain a dummy load is coupled to the tank, and apply plate (and screen) voltage. If the control grid current (I_C) is not as specified, adjust the tap on the coil (*with power off*) until the grid current is as specified.

Adjust the dummy load coupling (see *Ham News*, Vol. 6, No. 1, page 6 for a discussion of dummy loads), until the proper plate current (I_B) is being drawn, according to the table. Readjust the tap for proper grid current. Next, measure power output in some manner, and reduce the filament voltage until the power output drops down 10%. Read filament voltage. If this voltage is below the figure stated in

column 7 on page 5, the tube is "good." If the voltage is more than the stated figure, the tube is "bad."

(Power output may be read in a comparative manner by the device shown on page 8.)

If a tube passes Test III-A, you know that the tube has some life left in it. The lower the filament voltage reading, the better the emission. This test will permit you to compare the emission of two tubes quite easily.

If you use your transmitter for the test set, Test III-A is run in a similar manner. Turn on the filaments, wait five minutes, then apply grid drive until I_C is as specified. Apply plate (and screen) voltage and adjust your dummy load until I_B is as specified. Measure power output, lower filament voltage until this power drops to 90% of the original value, then read filament voltage.

When running test III-A, watch the tube envelope. If a bluish glow appears which seems to fill most of the envelope, the tube is gassy and hence "bad." Under these circumstances, plate and screen currents may run extremely high.

Test III-B is a different sort of test, but it gives you approximately the same information as Test III-A. In Test III-B all electrodes except cathode (and/or filament) are connected together, then a positive voltage is applied to the electrodes, and the total current measured. Caution must be employed when running this test, as the grid will be damaged if the voltage is applied for more than a second or so.

To run this test, connect the tube as shown in Fig. 3. Apply the filament voltage specified in column 1, page 6, and allow the filament to heat for five minutes. Make certain you are using the right plate voltage (column 2, page 6) then throw the switch. The instant the plate current meter settles down, make a mental note of the reading and turn the switch off. *Under no circumstances should the plate voltage be applied for more than four seconds.*

If the current for a new tube is greater than the value indicated in column 4, page 6, then the tube is "good." If the current for a used tube is greater than the value specified in column 3, page 6, then the used tube is "good." If I_T is below this last figure, the tube is "bad." Tubes which have total currents (I_T) which are approximately the same value have approximately the same emission.

TEST I Continuity and Short Test

INSTRUCTIONS:

Use ohmmeter as discussed previously. Refer to proper diagram, below, and check for filament continuity, including filament or heater center-taps (if any). Check between other points where continuity should exist. Check the remainder of the pins, each to all others, to see if a short exists. Reject *tube if undesired shorts exist or if continuity is not found where it should exist.*

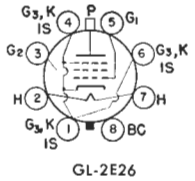

GL-2E26

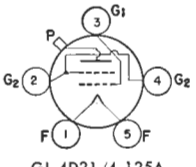

GL-4D21/4-125A
GL-4-250A/5D22

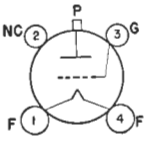

GL-35T

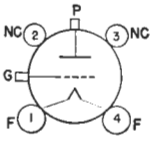

GL-100TH

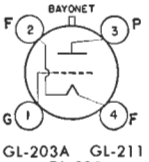

GL-203A GL-211
GL-838

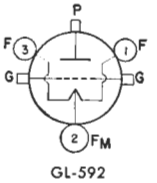

GL-592

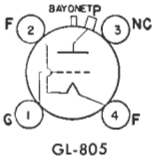

GL-805

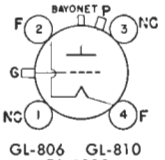

GL-806 GL-810
GL-8000

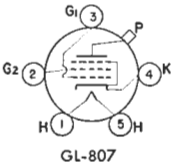

GL-807

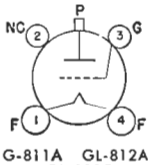

G-811A GL-812A
GL-8005

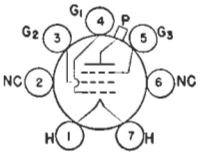

GL-813

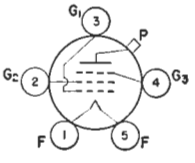

GL-814

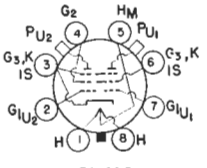

GL-815

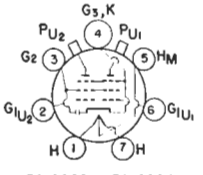

GL-829B GL-832A

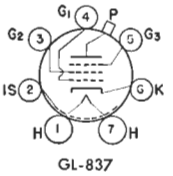

GL-837

KEY:

Bc—*Base Sleeve.* **F**—*Filament;* **Fm**—*Filament center-tap;* **G**—*Grid;* **H**—*Heater;* **Hm**—*Heater center-tap;* **Is**—*Internal Shield;* **K**—*Cathode;* **NC**—*No connection;* **P**—*Plate;* **S**—*Shell;* **U**—*Unit.*

TEST II Static Characteristic Test

IIA

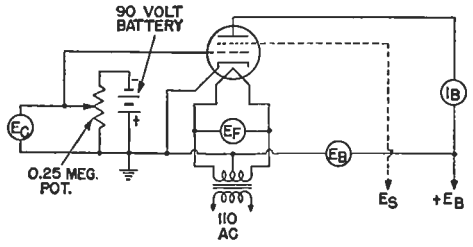

Fig. 1. Circuit diagram for static characteristic test set.

INSTRUCTIONS:

Apply filament voltage as shown in column 1; wait five minutes. Adjust grid bias to value half-way between those shown in column 4. Apply E_B and E_S. Readjust grid bias until I_B value is as shown in column 3. Read value of E_C on meter. Tube is "good" if this voltage falls inside the range indicated in column 4.

Column Number	1	2	3	4	5	6
Tube Type	E_F a-c volts	E_B d-c volts	I_B d-c ma.	$-E_C$ d-c volts	E_S d-c volts	Notes
GL-2E26	6.3	300	30	15/25	160	
GL-4D21/4-125A	5.0	1500	50	35/65	350	
GL-4-250A/5D22	5.0	2500	70	65/90	500	
GL-35T	5.0	1000	35	0/20	...	
GL-100TH	5.0	2000	40	20/50	...	
GL-806	5.0	1500	100	50/80	...	
GL-807	6.3	500	50	15/25	250	
GL-812A	6.3	1000	50	10/20	...	
GL-815	6.3	400	20	20/35	200	A
GL-829B	6.3	400	40	10/20	200	A
GL-832A	6.3	400	20	25/40	250	
GL-8005	10.0	1000	50	20/40	...	

IIB

INSTRUCTIONS:

Apply filament voltage as shown in column 1; wait five minutes. Set grid bias to value given in column 4, and apply E_B and E_S. Read I_B. Tube is "good" if this current falls inside the range of values indicated in column 3.

Column Number	1	2	3	4	5	6
Tube Type	E_F a-c volts	E_B d-c volts	I_B d-c mo.	$-E_C$ d-c volts	E_S d-c volts	Notes
GL-203A	10.0	1000	85/155	0	...	
GL-211	10.0	1000	55/85	50	...	
GL-592	10.0	2000	40/60	50	...	
GL-805	10.0	1500	60/100	0	...	
GL-810	10.0	2000	45/65	35	...	
GL-811A	6.3	1600	0/30	0	...	
GL-813	10.0	2000	35/65	35	400	
GL-814	10.0	1250	30/48	20	300	
GL-837	12.6	350	0/30	20	200	B
GL-838	10.0	1250	40/70	0	...	
GL-8000	10.0	2000	40/75	90	...	

NOTES:

A. For one section only. The grid of the section not being tested should be connected to the negative terminal of a 90-volt battery, and the positive battery terminal connected to the common cathode.

B. This tube requires a suppressor voltage during test. Connect +45 volts to the suppressor grid (pin 5). The negative voltage return goes to cathode (pin 6).

TEST IIIA 14 Megacycle Power Oscillation Test

INSTRUCTIONS: *Apply filament voltage as shown in Column 1. Wait five minutes. Apply plate and screen voltage (be sure dummy load is in place). If grid current is not as specified in column B, change tap on coil until value is correct. Change output coupling till plate current is as shown in column 5. Recheck grid current. Reduce filament voltage until output drops 10%. Read filament voltage. Tube is "good" if filament voltage is equal to or less than value shown in column 7.*

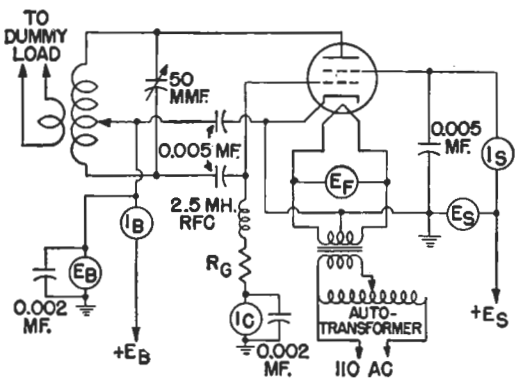

Fig. 2. Circuit diagram for power oscillator test set.

Column Number	1	2	3	4	5	6	7	8
Tube Type	E_F a-c volts	R_G ohms	I_C d-c ma.	E_B d-c volts	I_B d-c ma.	E_S d-c volts	E_M a-c volts	Notes
GL-4D21/4-125A	5.0	15,000	10	3000	100	350	4.5	
GL-4-250A/5D22	5.0	15,000	8	3000	200	500	4.5	
GL-35T	5.0	3,000	40	1500	120	...	4.5	
GL-100TH	5.0	4,000	50	3000	150	...	4.5	
GL-203A	10.0	5,000	25	1250	175	...	9.0	
GL-211	10.0	5,000	30	1250	175	...	9.0	
GL-592	10.0	5,000	45	3000	200	...	9.0	
GL-805	10.0	5,000	57	1500	210	...	9.0	
GL-806	5.0	10,000	50	3000	200	...	4.5	
GL-810	10.0	5,000	50	2000	250	...	8.8	
GL-811A	6.3	3,500	40	1500	150	...	5.7	
GL-812A	6.3	3,500	40	1500	150	...	5.7	
GL-813	10.0	10,000	12	2000	180	400	9.0	C
GL-814	10.0	8,000	12	1250	150	300	9.0	D
GL-838	10.0	5,000	55	1250	175	...	9.0	
GL-8000	10.0	8,000	38	2250	275	...	8.8	
GL-8005	10.0	5,000	35	1500	200	...	9.0	

NOTES:
C. Screen current on "good" tube should be between 25 and 55 ma.
D. Screen current on "good" tube should be between 15 and 30 ma.

Test IIIB Limited Peak Emission Test

INSTRUCTIONS: *Apply filament voltage as shown in column 1. Wait five minutes. Use battery indicated in column 2 for anode supply. Turn switch on and as soon as meter in anode circuit comes to rest, make a mental note of I_T and turn switch off.* If switch is on for more than four seconds you may damage the tube. *A new tube is "good" if I_T is greater than the value indicated in column 4. A used tube still has some life left if I_T is greater than the value shown in column 3. Any value of I_T greater than that shown in column 3 indicates a usable tube.*

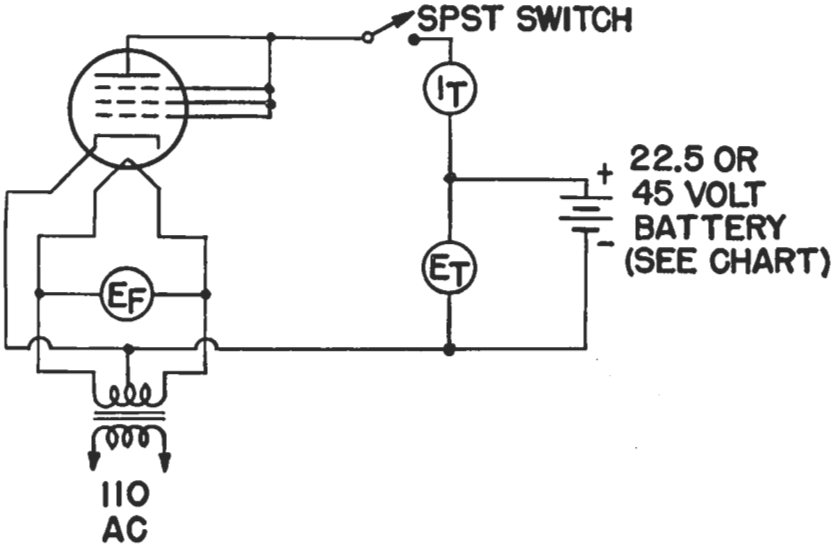

Fig. 3. Circuit diagram for limited peak emission test.

Column Number	1	2	3	4	5
Tube Type	E_F a-c volts	E_T d-c volts	I_T d-c ma.	I_T d-c ma.	Notes
GL-2E26	6.3	22.5	85	110	
GL-807	6.3	45.0	190	255	
GL-815	6.3	22.5	85	110	E
GL-829B	6.3	22.5	160	215	E
GL-832A	6.3	22.5	50	70	E
GL-837	12.6	22.5	65	85	

NOTES: *E. For one section only. The grid of the section not being tested should be connected to the negative terminal of a 90-volt battery, and the positive battery terminal connected to the common cathode.*

Electronic TUBES

Ham News

MAY–JUNE, 1954

VOL. 9—NO. 3

Copyright 1954, by General Electric Company



PICKING THE PROPER INSULATION

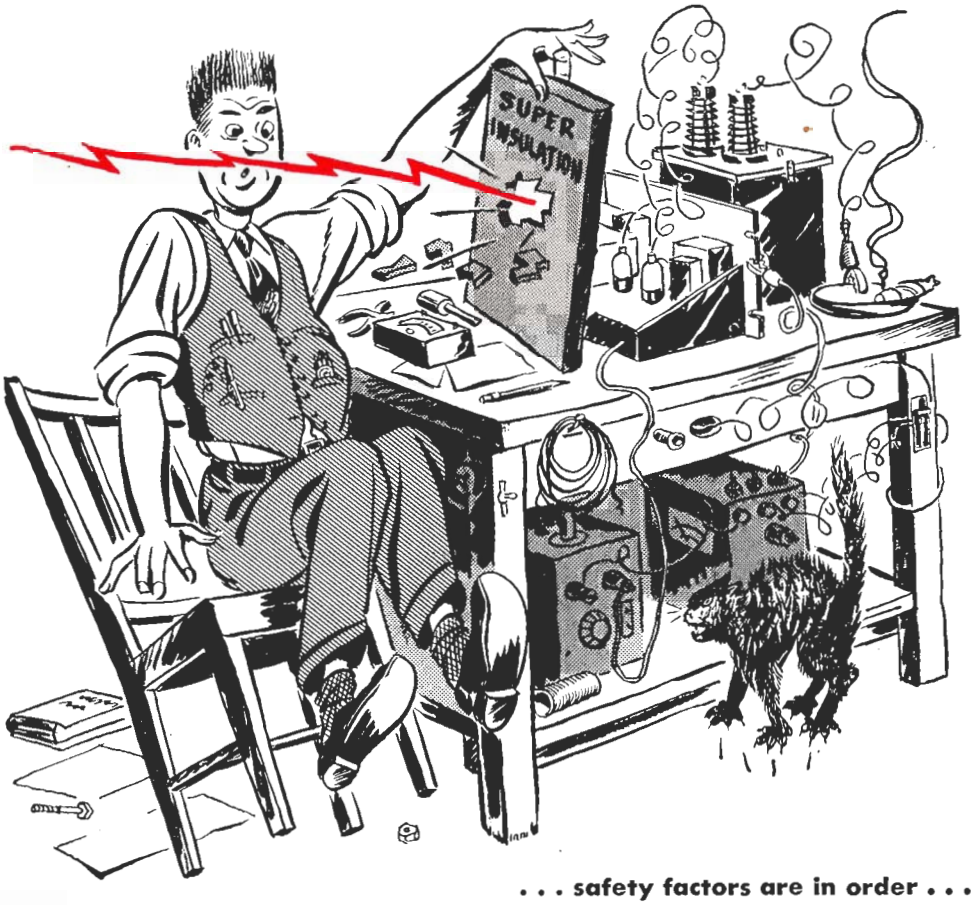

. . . safety factors are in order . . .

Contents

Picking the Proper Insulation ..... Page 2
1953 Edison Radio Amateur Award Winner ..... Page 4
Sweeping the Spectrum ..... Page 7
A Streamlined Rectifier ..... Page 8

PICKING THE PROPER INSULATION

It is generally recognized the primary function of electrical insulation is to guide current flow through desired paths and to separate electrical circuits and conductors which operate at different voltages. Furthermore, it is evident there are gross differences in the way insulations perform. For example, coils wound on polystyrene forms have a higher "Q" than those wound on molded mud forms; and certain circuits require the use of mica capacitors while in others cheaper paper capacitors will perform satisfactorily.

What are the electrical specifications by which the performance of insulation is measured? What considerations are involved in the selection of the proper insulation for a particular job?

Some specifications (like power factor) are easily measured and known to a few percent. Others (like puncture strength) are very nebulous and must be used with a great deal of caution in any design application.

Liquid and solid materials are broadly divided into classes according to their ability to conduct electricity. To be specific, when we measure the resistance of a number of liquid and solid materials between two metal plates each 1 inch square and separated by 1 inch (see Figure 1), we find most metals and acids are relatively good conductors of electricity while mineral oil, glass, wood, rubber and plastics are relatively poor conductors. The resistance of a sample having the aforementioned dimensions is called ***resistivity*** and is measured by a special unit called ohm-inches.

Between the two extremes (*i.e.*, the conductors and

TABLE I

Insulation Specifications* (Measured at 25°C)

Material	Resistivity (ohm-in. at 30% rel. humidity or lower)	Dielectric Constant	Power Factor (%)			Puncture Strength	
			60 cy	1 mc	100 mc	d-c or peak a-c V/mil	Thickness of test sample
INORGANIC							
air	infinite	1	0	0	0	20	
mica	10^{13}	5–7	0.5	0.04	0.02	600–900	.004"
Mycalex	10^{15}	7	0.64	0.21	0.22	360	.2"
steatite	10^{14}	6	0.2	0.3	0.2	240	.250"
glass (Pyrex)	10^{14}	5	0.8	0.3	0.4	335	
barium titanate	10^{13}	1200	6.0	1.0	1.0	75 (approx)	
ORGANIC							
Teflon	10^{16}	2.1	0.02	0.02	0.02	250–1600	.012"
polyethylene	10^{16}	2.2	0.01	0.02	0.04	400	.125"
polystyrene	10^{18}	2.6	0.02	0.02	0.05	600	.125"
black Bakelite	10^{14}	5	1.0	0.5	0.5	350	.125"
Lucite Plexiglass	10^{16}	3	6.0	2.0	1.0	500	.125"
Kel-F fluorothene	10^{18}	2.5	2.0	0.9	0.5	400–2500	.125"
hard rubber	10^{15}	3	0.4	6.0	—	400	.125"
paper	—	4	1.0	4.0	6.0	200	.125"

**A large number of the values quoted here taken from the Massachusetts Institute of Technology "Tables of Dielectric Materials."*

insulators) lies an intermediate group of materials called semiconductors. We have heard a great deal lately about their use as transistors; however, they conduct electricity too well to be useful as insulation. The arbitrary boundaries in resistivity of semiconductors are generally taken to be 1 ohm-inch and 10^6 ohm-inches.

In Table I are listed a number of materials used as insulation, together with their most important electrical specifications—namely, resistivity, dielectric constant, power factor and puncture strength.

In the first column it will be noted that the resistivity values for these insulators are all a million times or more larger than the upper limit of the semiconductors. The measurement of such large resistances is not easy, but by using thin samples and 500 volts or more applied to large electrodes, values up to about 10^{16} ohm-inches can be measured accurately. The values quoted in Table I were measured at a relative humidity of 30% or lower. Moisture absorbed within or on the surfaces of high resistivity insulation can seriously lower the values measured.

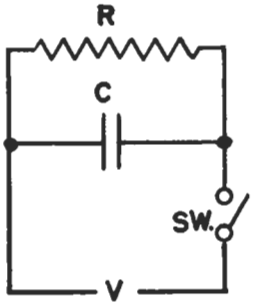

Figure 1

Consider next the currents that flow through the block of insulation shown in Figure 1 when voltage V is suddenly applied by closing the switch. If V is a d-c voltage, there is a rush of charging current which gradually decays to some steady value determined by the resistivity of the material and the applied voltage. However, when a-c voltage is applied, although most of the current leads the voltage by 90° ($I_{capacitive}$), a small but measurable current component is in phase with the voltage (I_{ohmic}). The vector diagram of Figure 2 represents these two currents.

Now the ohmic current alone produces heat. The amount of heat is determined by the d-c resistivity of the insulation in conjunction with some extra heat generated when the molecules of the insulation rub against each other as they move under the influence of the a-c voltage.

Thus the cube of insulation could be represented circuit-wise by a resistance shunted across a "perfect" capacitor—that is, a capacitor in which all the current is out of phase with the applied voltage. For "good" insulation of the type we are considering, the ratio of the heat-producing current (I_{ohmic}) to the no-heat-producing current ($I_{capacitive}$) is called the power factor of the insulation.

In other words, the power factor is the number by which the "apparent" power* of a capacitor-resistor combination must be multiplied to obtain the actual watts of heat developed. The power factor is a number (usually expressed as a percentage) which can vary from 0% for a perfect insulator such as air to 100% for a perfect conductor.

For most commonly used insulators the power factor is less than 5%, and it may be as low as .02% for the very best insulators such as polystyrene or mica.

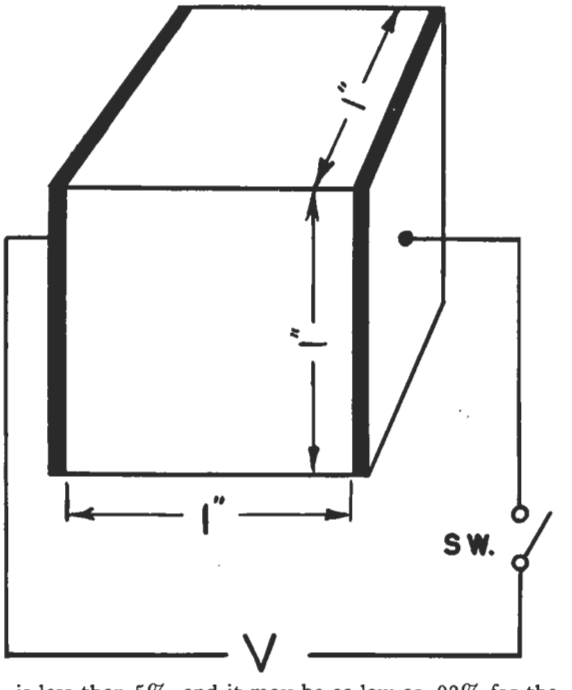

Now as indicated previously, the a-c resistivity of an insulator is in part determined by the movement of the molecules under the influence of the a-c voltage. The net result is to cause the power factor to change in a rather complicated manner with variations in the frequency of the measuring voltage. This is reflected in the power-factor columns in Table I which show it is meaningless to quote a power factor without specifying the frequency at which the measurement was made.

This variation with frequency illustrates why it is of utmost importance in many applications to choose a coil form of suitable material when working with RF circuits. For instance, a paper coil form would have a power factor of 1% at 60 cycles but 6% at 100 megacycles. And in comparing two different types of coil form material it is seen that the power factor of black Bakelite is .5% at 100 megacycles while polystyrene is .05% at the same frequency. Thus the efficiency and Q of an RF circuit can very well be quite dependent upon the type of insulation used.

* The "apparent power" or "volt-amperes" drawn by a circuit containing both resistance and reactance (as in Fig. 1) is obtained by multiplying the voltage across the circuit by the total current drawn without regard to their relative phases. Actually, power is consumed in the resistor only; the "power" in the capacitor being simply transferred back and forth between the source and the capacitor. Therefore, we define the power factor as the ratio of the actual power consumed by the resistor (which appears as heat) to the apparent power drawn by both resistor and capacitor.

(Continued on page 6)

PICKING THE PROPER INSULATION

(*Cont'd from page 3*)

It is a familiar fact that the capacity of a condenser depends on the area and separation of the plates, but perhaps not nearly so well appreciated is the fact that capacity also depends on the ***kind*** of material between the plates. This has led to the use of the dimensionless quantity called the dielectric constant which usually is denoted by the letter K.

Suppose we measure the capacity of the condenser of Figure 1 first with a solid insulation between the plates and then with just air between the plates. The capacitance obtained with the solid insulation divided by the capacitance obtained with air insulation gives us the dielectric constant. In this way, the K of air is always 1. The K of the so-called "high-K" materials like barium titanate may have a value of more than 1000 (see Table I).

The principal effect of this number is to determine the capacitance per cubic inch that may be obtained in a capacitor. Thus a capacitor made with mica insulation could be made more compact than a paper-insulated capacitor of the same value since the dielectric constant of paper is 2 and mica is 7. For the same reason, a Pyranol filled capacitor is much smaller than an oil-filled capacitor of the same value.

The last of the more important electrical ratings assigned to insulation is the "puncture" or dielectric strength. This usually is expressed in volts per mil, and gives the measure of the amount of voltage necessary to puncture a piece of insulation. While the puncture strengths in Table I are quoted in volts per mil of insulation thickness, these values are not scalable over a wide range of thickness. The puncture strengths in Table I apply to measurements made with flat electrodes with carefully polished and rounded edges on insulation about $\frac{1}{8}$ inch thick. This condition rarely is attained in practice with the result the strengths listed in Table I are all apt to be higher than would be encountered in practical situations. Thus safety factors of the order of 100% must be applied to any design based on these numbers.

Although such a listing of puncture strengths is qualitative at best, the following generalizations may be made: (a) Gases (like air) at ordinary pressures have puncture strengths about ten times lower than most solids; and (b) solid insulators $\frac{1}{8}$ to $\frac{1}{4}$ inch thick have strengths of several hundred volts/mil except in the case of mica and very thin plastic sheets (a few mils) which may have a puncture strength as large as 1000 volts/mil.

A fact worth noting is that breakdown usually culminates in a high-temperature arc. While this is of little consequence with air and ceramic insulation, organic insulation will be charred by the arc and the carbon track created will then break down at a much lower voltage than that which caused the initial failure. This fact may be of importance when selecting an insulation for high voltage applications where arcing is expected. Often breakdowns occur in transformers where voltage taps are brought out from the windings. If the charred varnished cambric insulation is carefully cut away with a knife or razor blade, and the resulting void filled with plastic cement such as Glyptal, the transformer may sometimes be saved.

Breakdown between two conductors in certain situations may be eliminated by inserting a sheet of solid insulation between them. A piece of mica or thin sheet of plastic often will do the trick.

Sharp points on conductors cause breakdown at lower voltages than will occur with smooth-surfaced conductors under otherwise equal conditions. Thus, care should be taken to polish capacitor plate edges, keep the plates dust-free and to round-off conductors in high-voltage circuits. For example, globlets of solder will sufficiently smooth the ends of two pieces of No. 10 wire that have been cut with side cutters so that the breakdown voltage rating of the gap will be doubled.

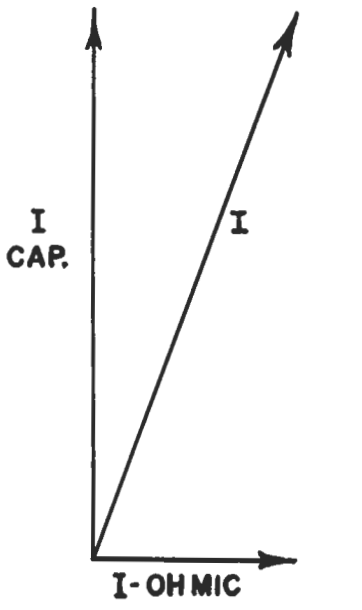

Figure 2

A discussion of insulation would not be complete without mention of the effect of moisture. Moisture will lower the breakdown voltage of many kinds of insulation, especially the paper and cloth varieties. Thus, it is wise to allow ample "dry-out" time of high-voltage gear that has been stored in damp locations.

Furthermore, moisture absorbed on the surfaces of plastics will cause their power factors (and attenuation per foot) to rise. Almost every ham who has operated in wet weather with twin conductors insulated with polyethylene has noticed this effect. By actual measurement at 100 megacycles, the attenuation per hundred feet of one variety of twin lead conductors increased from 1.2 decibels to 6.5 decibels when its surface was wet. The application of water-repellent materials like silicones to these surfaces often will improve performance of insulation under adverse moisture conditions.

All the values quoted in Table I apply to measurements made at room temperature. Generally speaking, at higher temperatures the performance of insulating materials becomes poorer. As the operating temperature of a given insulation is raised, the resistivity, dielectric constant, and puncture voltage becomes lower while the power factor rises—W2UKL.

Electronic TUBES

TUBE DEPARTMENT
GENERAL ELECTRIC
Schenectady 5, N. Y.

G-E HAM NEWS

Copyright 1955, by General Electric Company

MAY–JUNE, 1955 VOL. 10–NO. 3

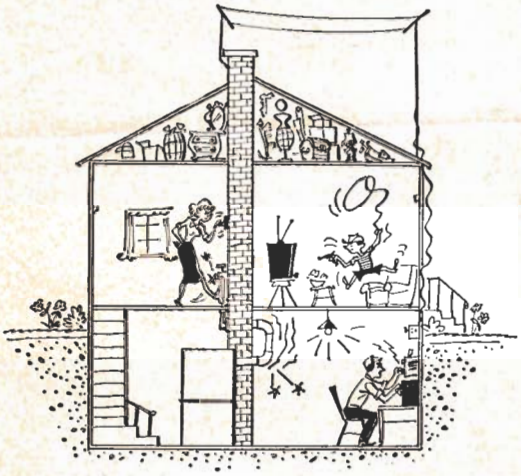

HAM SHACK INTERCOM

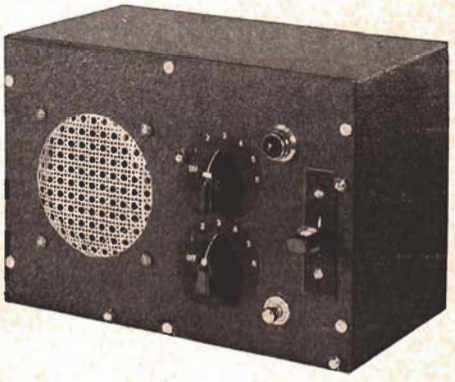

Did you know that pipe-pounding and light-flicking intercom systems are obsolete? Try this efficient, all-electronic model and promote peace with the family.

—Lighthouse Larry



CONTENTS

"Operation Crystal" . . . . . page 2
Ham Shack Intercom . . . . . page 3
Edison Radio Amateur Award Winner . . . . . page 6
Sweeping the Spectrum . . . . . page 7
Essential Characteristics Handbook . . . . . page 8

HAM SHACK INTERCOM

What's so unusual about an inter-com system? The control circuits of this G-E HAM NEWS model are designed specifically with the "hermit" type of radio shack in mind—a good nickname for most home stations located in attics, upstairs rooms, cellars, or even an actual shack in the yard. When installed in the radio shack, rapid temper-saving communication is available to the front and rear doors, kitchen, nursery, or what-have-you. It will replace, at nominal cost, the more conventional systems of signalling the "chief op'." Banging on the floor, ceiling and plumbing, or flicking the cellar or attic light on and off would no longer be in vogue. It is also a handy gadget to have for communication between tents at the radio club's annual Field Day station.

For the "occasional" 'phone man, it could be used as a speech amplifier to drive the grid of a "clamp" tube on the screen of that tetrode final amplifier even while it is also on duty in its intended role. One position of the master station selector switch could be reserved for this application.

As a general-purpose audio amplifier, it is even handy for checking the output of the Jr. op's crystal receiver. When the XYL sees how much fun you are having with it, she is sure to want a master station for the kitchen. Keep that in mind when scrounging for the parts.

Two types of construction, rack panel and table cabinet, are described to show how the master station could fit into most styles of ham shack arrangement.

CONTROL CIRCUITS

As shown in Fig. 1, the 3PDT relay and the station selector switch, S_2, form the heart of a control system that allows the master station amplifier to be activated from any remote station simply by pressing switch S_4, to the "talk" position. This grounds one side of the heater winding and energizes the relay. A ground path provided by one relay contact then acts as a "holding" switch for the relay coil current. Heater and plate power are applied through the other two normally open contacts. The amplifier is turned off by pressing S_5, on the master station, to remove the relay coil power. The heater current must be isolated from the relay-closing circuit, otherwise the extra voltage drop through the external cable would affect the relay operation.

Up to four remote stations can be selected by S_2, the fifth position connecting all stations at once. Any remote station can call into the master station, regardless of the setting of S_2, when S_4 is in the "talk" position. The remote station signal then goes directly to the input of the amplifier whenever S_1 is in the "listen" position.

If only the master and one remote station are needed, S_2 and its associated wiring and terminal strips enclosed in the dotted lines on the diagram will not be necessary. Further simplification is possible by eliminating the control relay, if the amplifier runs continuously.

Inexpensive four-wire TV antenna rotator control cable is used to connect the master and remote stations when the complete control system is desired. The rotator cable is flat in cross-section and can easily be run around door and window casings, behind moldings and base-boards, under rugs or even fished through walls, if you are the ambitious type of person. Two or three-wire cable may be used with the simplified circuit.

AMPLIFIER CIRCUIT

A three-stage audio amplifier circuit is used, with the input signal from the speaker-microphones fed into one cathode of a 12AX7 twin-triode. This grounded-grid input circuit has less gain than conventional types, but eliminates the input matching transformer which would otherwise be necessary. Sufficient output at only 110 plate volts is possible with the new 6CA5 beam-pentode tube in the power output stage. (See G-E HAM NEWS, Volume 10, No. 1, for ratings and description.) The coupling, cathode by-pass and shunting condensers are tailored to attenuate frequencies outside the normal speech range, reducing any stray hum pickup by the remote station cables. (See G-E HAM NEWS, Volume 4, No. 4, for details.)

Expensive instant-heating type tubes were deemed unnecessary because the amplifier was found to be capable of passing a signal about 8 seconds after the relay was energized.

A transformer-powered, half-wave, selenium-rectifier plate supply with an RC filter is used to minimize the shock hazard always possible with transformerless type supplies. This also simplifies the tube heater and relay power problem. The power transformer, T_1, runs all the time that the power switch, S_3, on the volume control shaft is "on." After running several hours in the stand-by position, the transformer was barely warm. The built-in power supply can be eliminated if a similar source is available in the shack.

Standard 3.2-ohm voice-coil PM speakers could be used in place of the 45-ohm types designed especially for inter-com service if each remote station does not require over 25 feet of connecting cable. Savings in original cost would be about fifty cents per speaker.

CONSTRUCTION

All new parts were used in the model stations, but either one could be built around a "defunct" table radio chassis and cabinet. The amplifier and power supply is built on a Bud CB-1620 miniature open-end aluminum chassis drilled according to Fig. 2. All parts are arranged so that the same chassis can be mounted vertically in either a 6 x 9 x 5-inch metal utility box, or on a 5¼-inch wide relay rack panel. Station selector switch, S_2, and the volume control, R_5, mount with the shafts projecting through the underside of the chassis. Five 3-terminal tie-points are fastened under the chassis at the places shown in the bottom view, Fig. 3, when the transformers and sockets are assembled with 6–32 x ¼-inch and 4–40 x ¼-inch machine screws. Soldering lugs are also placed on these screws for ground tie-points. Rubber grommets are used in the six ⅜-inch diameter holes marked "D" where leads from the transformers, switches and volume control pass through the chassis.

All wiring is done with conventional colored hook-up wire, as no shielded leads were found necessary. The wires to the speaker, S_1, S_5 and the pilot-light bracket are left a few inches longer than necessary. These parts are then fastened to the panel, drilled as shown in Fig. 4, before the chassis is assembled with ¾-inch long tubular metal spacers between the bottom lip of the chassis and the panel. Note that blank spaces are left under the chassis where the panel-mounted parts are located. As the power relay mounts on the bottom of the box next to the chassis, connections made to it were left slightly long and then laced together. Small rubber feet, ⅜-inches in diameter, fastened on the bottom of the cabinet, provide clearance for the relay mounting screw-heads. The terminal strips for connecting to the remote stations were mounted directly on the back of the cabinet. Leads from the strips to S_2 and the relay are made long enough to allow the back to be opened with the chassis in place.

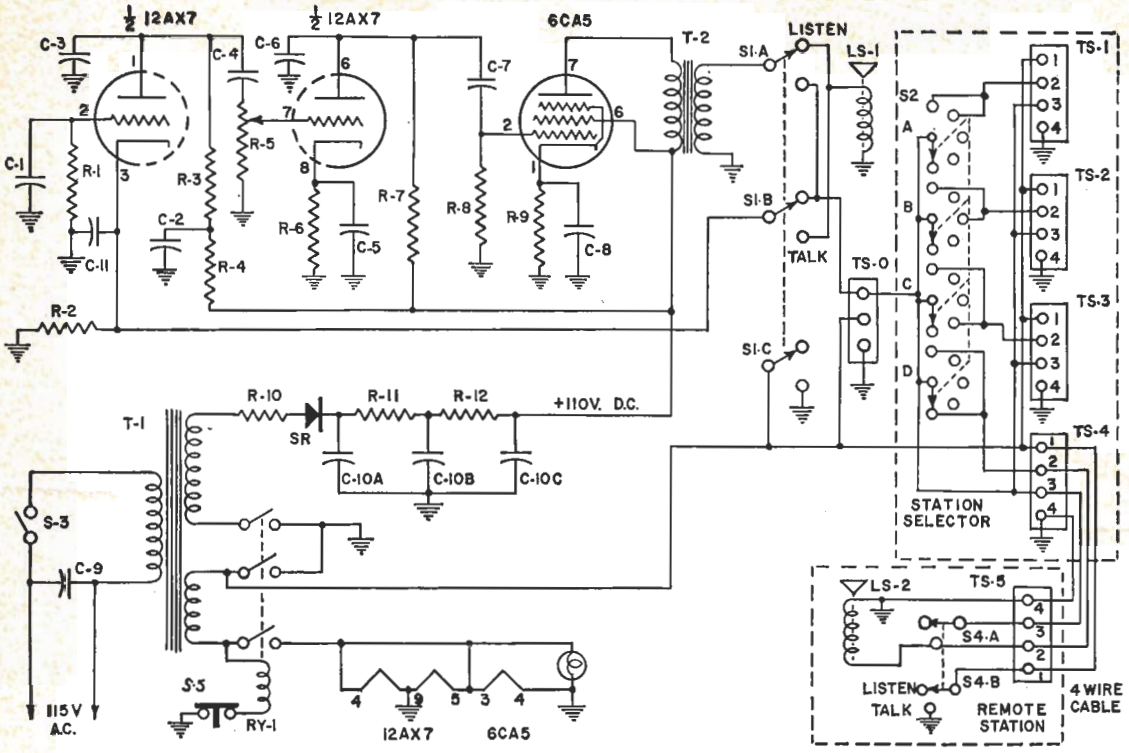

Fig. 1 Schematic diagram

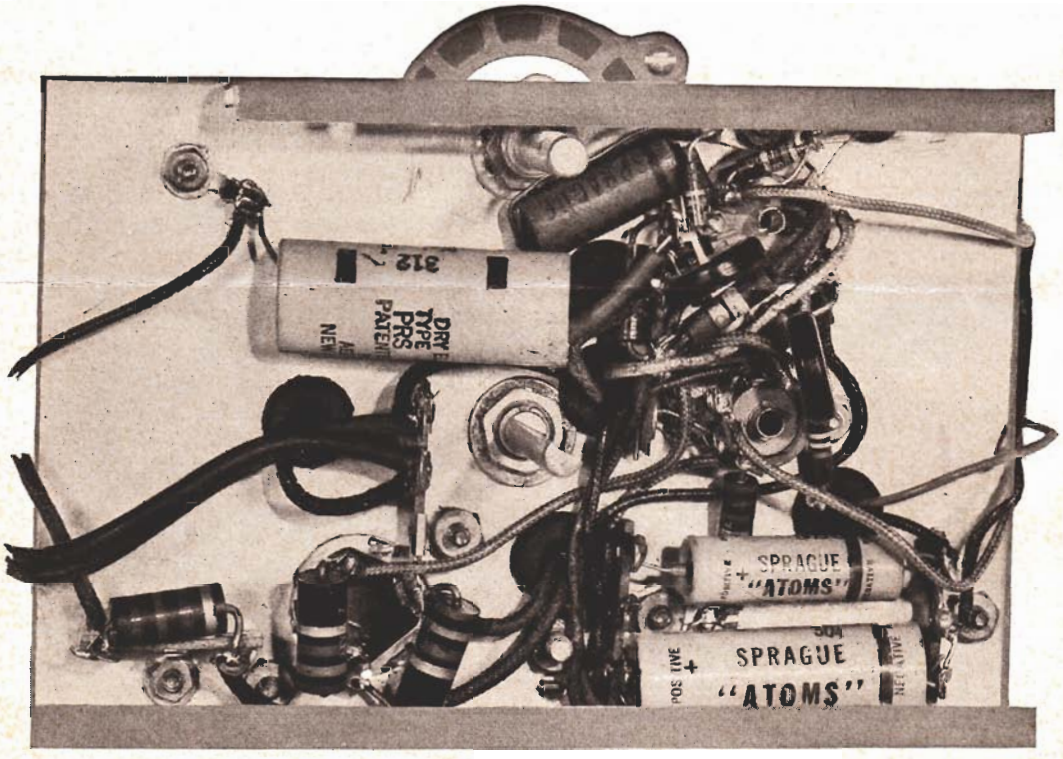

Fig. 3 Chassis bottom view

"A" drill—No. 32 spaced to suit tube sockets.

"B" drill—No. 26 through both chassis and bottom lip.

"C" drill—No. 26 for T_2 at left, T_1 at right, C_{10} at ⅛-inch hole and rectifier at bottom center.

"D" drill—⅜-in. dia for rubber grommets.

"E" drill—¾-in. dia for R_5 and S_2.

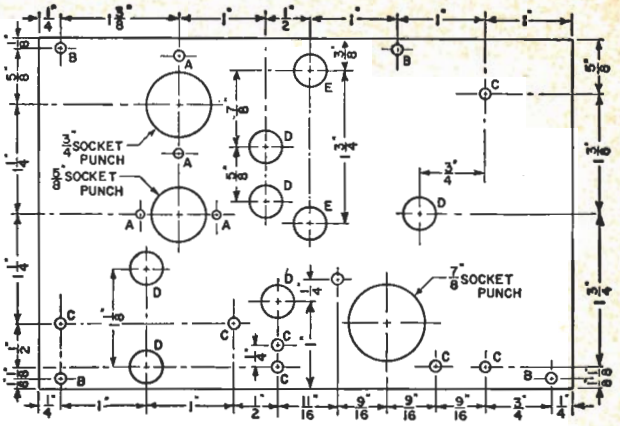

Fig. 2 Chassis drilling layout (top view)

PARTS LIST

C_1—0.1-mfd, 200-volt paper.
C_2—10-mfd, 150-volt miniature electrolytic.
C_3, C_6—500-mmf, 500-volt disc ceramic.
C_4, C_7—2000-mmf, 500-volt disc ceramic.
C_5—10-mfd, 50-volt miniature electrolytic.
C_8—50-mfd, 50-volt miniature electrolytic.
C_9—0.05-mfd, 600-volt paper.
$C_{10a,b,c}$—Three-section, 40-mfd, 150-volt electrolytic, "twist-lock" type not over 3 inches high.
C_{11}—5000-mmf, 500-volt disc ceramic.
I_1—½-inch jeweled pilot light and bracket.
LS_1, LS_2—4-inch PM speakers, 45-ohm voice coils (QUAM 4AO7Z45 or similar).
R_1—10-megohm, ½-watt.
R_2—470-ohm, ½-watt.
R_3, R_7—0.1-megohm, ½-watt.
R_4, R_6—2200-ohm, 1-watt.
R_5—0.25-megohm potentiometer with SPST switch.
R_8—0.24-megohm, ½-watt.
R_9—120-ohm, 1-watt.
R_{10}—100-ohm, 2-watt.
R_{11}, R_{12}—180-ohm, 2-watt.
RY_1—3PDT, 6-volt AC coil relay (Potter & Brumfield KR-14A 6-volt AC coil).
S_1—4-pole, 2-position, non-shorting, spring return lever switch.
S_2—4-pole, 5-position, shorting rotary switch.
S_3—SPST switch on back of potentiometer R_5.
S_4—2-pole, 2-position, non-shorting, spring return lever switch.
S_5—SPST, normally closed push-button switch.
SR—130-volt, 75 ma, half-wave selenium rectifier.
T_1—Half-wave power transformer, 125 volts @ 50 ma, 6.3 volts @ 2 amp. secondaries.
T_2—4-watt universal output transformer, connected to match speakers used.
TS_{1-5}—4-terminal and lug phenolic strips.
TS_0—optional strip when S_2 is not needed.
Dial plates: (1) 5-position tap switch plate (Mallory No. 375). (1) OFF and10-position volume control plate (Mallory No. 390).
(2) Single gang lever-switch plates (Centralab P-1755).

The above description also applies if the chassis will be housed in a small table radio cabinet, except that small blocks of ¾-inch thick white-pine are glued to the inside of the panel and 1½-inch long wood screws fasten the chassis to the blocks from the rear. A back cover of ⅛-inch thick tempered hard-board with the terminal strips mounted on it is then fashioned.

RELAY RACK MODEL

The amplifier chassis bolts directly to the rear of the relay rack panel, with the control shafts located about 2 inches off-center. The lower edge of the chassis comes flush with the same edge of the panel. The speaker, S_1, S_5, power relay and pilot-light bracket are fastened to unused portions of the panel either side of the chassis. The speaker is centered about 4 inches from one end of the panel and the relay positioned next to it. The pilot-light bracket and S_1 are located in line with the control shafts between the chassis and relay. Talk-listen switch, S_1, mounts about 1 inch from the other end of the chassis. Ornamental-head screws are used wherever the heads show on the front of the panel.

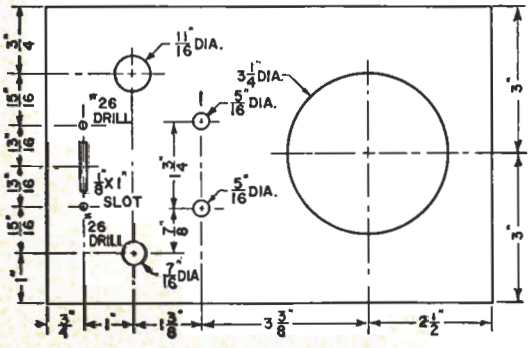

Fig. 4 Panel drilling layout for cabinet model

A decorative pattern of holes drilled through the panel can be used as a speaker grille, or a small piece of "do-it-yourself" perforated aluminum sheet can be used between the speaker and a 3¼-inch diameter hole bored through the panel. A "dished" effect was obtained by gently tapping the sheet with an object slightly smaller than the hole. Standard lever and rotary switch plates identify the various controls.

The terminal strips were mounted on a small piece of hard-board and fastened to a pair of small angle brackets assembled under the chassis mounting screws.

REMOTE STATIONS

A Bud CS-1948 4-inch metal speaker cabinet houses each remote speaker and the call-in switch, S_4. A Cinch-Jones No. 17-4 terminal strip for the external cable is mounted on the back of the box with 6–32 x ¼-inch machine screws. Note that the cabinet is grounded to the terminal strip.

Many other possible uses will probably occur that have not been mentioned in this description, although our few examples show that an inter-com system is a necessity in many amateur radio installations.

TV CHANNEL FREQUENCIES

Hams frequently have occasion to refer to TV frequencies and the following list is reprinted for reference. The list includes both picture and sound carrier frequencies in each of the 12 VHF TV ranges and the 70 UHF TV ranges. More and more of these channels are coming into use in the smaller communities throughout the country.

CHANNEL NO.	FREQUENCY RANGE MC	PICTURE CARRIER MC	SOUND CARRIER MC
2	54–60	55.25	59.75
3	60–66	61.25	65.75
4	66–72	67.25	71.75
5	76–82	77.25	81.75
6	82–88	83.25	87.75
7	174–180	175.25	179.75
8	180–186	181.25	185.75
9	186–192	187.25	191.75
10	192–198	193.25	197.75
11	198–204	199.25	203.75
12	204–210	205.25	209.75
13	210–216	211.25	215.75
14	470–476	471.25	475.75
15	476–482	477.25	481.75
16	482–488	483.25	487.75
17	488–494	489.25	493.75
18	494–500	495.25	499.75
19	500–506	501.25	505.75
20	506–512	507.25	511.75
21	512–518	513.25	517.75
22	518–524	519.25	523.75
23	524–530	525.25	529.75
24	530–536	531.25	535.75
25	536–542	537.25	541.75
26	542–548	543.25	547.75
27	548–554	549.25	553.75
28	554–560	555.25	559.75
29	560–566	561.25	565.75
30	566–572	567.25	571.75
31	572–578	573.25	577.75
32	578–584	579.25	583.75
33	584–590	585.25	589.75
34	590–596	591.25	595.75
35	596–602	597.25	601.75
36	602–608	603.25	607.75
37	608–614	609.25	613.75
38	614–620	615.25	619.75
39	620–626	621.25	625.75
40	626–632	627.25	631.75
41	632–638	633.25	637.75
42	638–644	639.25	643.75
43	644–650	645.25	649.75
44	650–656	651.25	655.75
45	656–662	657.25	661.75
46	662–668	663.25	667.75
47	668–674	669.25	673.75
48	674–680	675.25	679.75
49	680–686	681.25	685.75
50	686–692	687.25	691.75
51	692–698	693.25	697.75
52	698–704	699.25	703.75
53	704–710	705.25	709.75
54	710–716	711.25	715.75
55	716–722	717.25	721.75
56	722–728	723.25	727.75
57	728–734	729.25	733.75
58	734–740	735.25	739.75
59	740–746	741.25	745.75
60	746–752	747.25	751.75
61	752–758	753.25	757.75
62	758–764	759.25	763.75
63	764–770	765.25	769.75
64	770–776	771.25	775.75
65	776–782	777.25	781.75
66	782–788	783.25	787.75
67	788–794	789.25	793.75
68	794–800	795.25	799.75
69	800–806	801.25	805.75
70	806–812	807.25	811.75
71	812–818	813.25	817.75
72	818–824	819.25	823.75
73	824–830	825.25	829.75
74	830–836	831.25	835.75
75	836–842	837.25	841.75
76	842–848	843.25	847.75
77	848–854	849.25	853.75
78	854–860	855.25	859.75
79	860–866	861.25	865.75
80	866–872	867.25	871.75
81	872–878	873.25	877.75
82	878–884	879.25	883.75
83	884–890	885.25	889.75

SWEEPING *the* SPECTRUM





COUNTERFEIT TUBE RACKET

Fellows—the story you are about to read is true—only the ***brands*** have been changed to confuse the customers. Brands? Not cattle brands! Electronic tube brands! Modern-day rustlers who change the ***brands*** and ***warranty dates*** on electronic tubes are a serious problem and important subject in the radio-television service industry these days.

Before going into the corrective measures now being taken by most tube manufacturers, let's trace the path of a typical rebranded counterfeit tube from one former source—the discarded tube box of a television repair shop or tube distributor. Obviously, such a tube will be very weak at best, or more likely, completely inoperative. The brand counterfeiters usually obtain these tubes for little or no cost, sometimes with the explanation that they are to be used as targets in a shooting gallery. Old markings are removed and the tubes given a cleaning before being rebranded, usually with the trade-mark of a prominent tube manufacturer. The most important step, stamping on a current warranty code number, makes a skilled rebrander's finished ***product*** almost identical in appearance to a new tube.

The rebrander markets reworked tubes through several channels, including turning them back to a tube distributor handling that brand, claiming that the tubes are ***inoperative***—certainly a true statement. New, operative tubes are received in exchange, and these are sold to anyone who will buy them at below-market prices. Some tube rebranders mix these new tubes with rebranded duds when selling them to a repair shop. Of course, the duds are discovered when the serviceman attempts to operate them in a set he is repairing. These inoperative rebranded tubes are also returned to a distributor by the repair shop, again in exchange for new tubes, since the counterfeit warranty code numbers indicate a recently-manufactured tube.

So far, our path has completed a cycle back to the tube distributor for many rebranded tubes—but that's not the end of the trail—since most tube manufacturers have taken definite steps to run the rebranders out of business. Until recently, a common method of handling in-warranty defective tube replacements was for the manufacturer to extend to wholesale tube buyers a percentage discount at the time of purchase which covered the replacement tube costs. Now—to keep worn or defective tubes out of the hands of rebranders, most tube manufacturers offer a tube-for-tube replacement plan, under which the distributor must return to the manufacturer any defective tube covered by a warranty. The manufacturer then gives the distributor a new tube for it.

Returning tubes to the factory which fail while still in warranty serves a three-fold purpose. Each tube is closely examined to insure that it is legitimate and also to determine the cause of failure. Thus, product quality is constantly improved as a result of tube failure studies. In addition, the manufacturer has an opportunity to destroy the tube to prevent it from falling into the hands of counterfeiters. Finally, the ***dud*** tube gives the authorities a clue to locations where counterfeiters are at work.

Additional precautions against counterfeiting are being taken by General Electric, which co-operates with local law enforcement authorities wherever the Company uncovers evidences of rebranding. Men from our security staff are assigned to obtain legal evidence of such illegal operations, recently resulting in the conviction of one rebrander in an eastern city. This tube counterfeiter claimed that his counterfeiting income could have reached $25,000 annually if he had not been ***lazy!*** Equipment required for these operations is simple and easy to transport, greatly increasing difficulties in obtaining the concrete evidence required for successful prosecution.

These rebranded tubes should not be confused with so-called seconds, tubes which do not conform to specifications, nor with legitimate surplus tubes. General Electric destroys "seconds" at the plant, although shady tube brokers at times have attempted to obtain them from us. Surplus tubes, sometimes available at low prices, usually are new tubes obtained from equipment manufacturers who may have gone bankrupt, out of business, or have changed the design of their equipment, etc. Since these manufacturers buy new tubes from tube makers in bulk and may select only those tubes which have certain desirable characteristics, the remainder may be resold to surplus tube dealers considerably below list price.

What about the supply of out-of-warranty discarded tubes still available to rebranders? This is the area where the co-operation of you, the radio amateurs, experimenters, electronic equipment repairmen and general public, counts heavily! Dispose of all such tubes in a manner by which they will no longer be available to the illegal operators! Otherwise, they may again appear on the market as rebranded tubes.

Nearly 500 million receiving and allied type tubes were manufactured during 1955, with a considerable percentage destined for the replacement tube market. For each new replacement tube sold, a dud of that type usually was discarded. The above figures highlight the importance of halting ***every*** flow of duds into illicit channels from this potentially huge source.

Obviously, the best solution to your personal tube supply problem is to deal with an authorized tube distributor. His nationally-branded stocks contain only new, factory-fresh tubes. Low-priced tubes from other sources may be bargains, but if a bulk purchase contains some inoperative tubes, cost of the tubes which do work might be higher than their first-line equivalents. The old saying, "You pay your money and take your choice," definitely applies to tube purchases too!

—Lighthouse Larry



it's not her perfume—
it's the ***National***
she bought him
for Christmas!



NC-183D

One of the most popular amateur receivers ever designed. Includes every desirable feature — dual conversion, 12 tuned I.F. stages, temperature compensation, hi-fi audio. $383.50 (less spkr.)



NC-125

Incorporates famed National Select-O-Ject for un-heard-of selectivity at the price! Edgelighted, direct-reading scales show amateur, police, ship and foreign frequencies. $199.95 (less spkr.)



NC-88

World Master. Top receiver dollar value. Tuned R.F. stage. Two I.F. stages. Cal. bandspread for 80, 40, 20, 15, 11 and 10 meter bands. $129.95



HRO-60

Latest and best of the world-famous HRO series — Utilizes dual conversion and 12 permeability tuned I.F. circuits for the highest skirt selectivity ever achieved! $533.50 (less spkr.)

NATIONAL COMPANY, INC., MALDEN, MASS.