C. TURNER
3/30/59

UHF MILITARY EQUIPMENT
CHAPTER ONE
UHF CHARACTERISTICS

1.0 USE OF UHF FOR SHORT-RANGE COMMUNICATIONS

The ultra high frequency band is being used more and more for short-range communications. Some of the advantages in using UHF for this service are:

(1) More frequency channels are available in this band. The lower frequency bands are very crowded as far as utilization is concerned, and must be reserved for long-range communications, for which the lower frequencies are so well suited.

(2) Line-of-sight propagation at ultra high frequencies reduces the possibility of interference between stations and permits many stations to use the same frequency, provided they are separated by a few hundred miles.

(3) Very little atmospheric noise is encountered at the ultra high frequencies. This is of utmost importance since lower frequencies are seriously affected and may be made useless by storms or other atmospheric disturbances. The absence of atmospheric noise permits rather simple carrier-operated "squelch" circuits to be used in the receivers. These "squelch" circuits silence the receiver except when signals are actually being received, thus reducing operator fatigue.

(4) Antennas can be made smaller and simpler in structure, both on the aircraft and at ground stations. Also, good directional characteristics can be obtained for point-to point type communications.

2.0 CHARACTERISTICS OF UHF PROPAGATION

UHF and VHF radio waves differ from lower frequency waves in that they are not reflected by the ionosphere, except under unusual circumstances. The ionosphere is a region from about 150 to 250 miles above the earth's surface which is composed of several layers of charged or ionized

particles. This ionized layer of air tends to bend the radio waves back to the earth.

This reflecting phenomenon makes possible long-range communication at frequencies from about 3 to 30 megacycles. Since UHF waves are not returned to the earth by the ionosphere, their transmission is normally limited to distances which are slightly greater than the optical line of sight. The lower atmosphere tends to bend radio waves downward so that they will travel slightly beyond the optical horizon. The mathematical expression for the radio line-of-sight distance is $D = \sqrt{2h} + \sqrt{2H}$, where D is the distance in statute miles, h is the height of one antenna and H is the height of the other antenna. This equation takes into consideration the bending by the lower atmosphere which is known as refraction. (h & H are in feet.)

Because the earth tends to reflect radio waves, it is possible to obtain interference at the receiving point between the direct wave from the transmitting antenna and the reflected wave. Although this type of interference, known as "lobing", can cause loss of signal strength under certain conditions, the effects are not serious with adequate transmitter power and receiver sensitivity.

3.0 OPERATION OF VACUUM TUBES IN UHF CIRCUITS

3.1 Electron Transit Time

In low frequency operation it is usually taken for granted that electrons leaving the cathode reach the plate instantaneously. No harm is done by this assumption, so long as the actual time of flight of electrons between the cathode and the plate is negligible compared to the duration of one cycle. If the total transit time is less than one-tenth of a cycle, the tube operates satisfactorily. At times longer than one-tenth cycle, the efficiency drops considerably. In the operation of vacuum tubes in UHF circuits, electron transit time must be considered. The undesirable effects of electron transit time, which cause the efficiency to drop, are heating of the plate, heating of the cathode, and grid circuit loading.

Plate heating is caused by electron bombardment of the plate. At low frequencies maximum electron flow occurs when the plate voltage is minimum and the grid voltage at its maximum positive value. This large electron flow is caused by the positive grid. At ultra high frequencies, all of these electrons do not have time to reach the plate before the plate voltage starts rising. This rising plate voltage accelerates the electrons toward the plate, which in turn bombard the plate.

Cathode heating is caused by electron bombardment of the cathode. The large number of electrons that left the cathode under the influence of the positive grid, do not have time to pass through the grid before the grid goes negative. The negative grid forces the electrons back toward the cathode causing them to bombard the cathode. This is referred to as "cathode back-heating". The filament voltage can be reduced so that the total heating of the cathode by the heater and by electron bombardment is normal for the tube.

Grid circuit loading is caused by an uneven distribution of electrons on each side of the grid. This uneven distribution is a result of the electron transit time and causes a voltage to be induced on the grid. The induced voltage causes current to flow in the grid circuit, which has the effect of lowering the input impedance of the tube. The lower input impedance reduces the input signal voltage.

Electron transit time can be decreased by reducing the spacing between the elements of the tube and by increasing the plate voltage.

3.2 Operation of Triodes

At higher radio frequencies, interelectrode capacities, lead inductances, and electron transit time limit the useful operation of triodes. The operation becomes unstable and the efficiency drops. The operation of neutralized triodes becomes unstable above about 30 megacycles and the frequency range over which neutralization is satisfactory is narrow. Operation of triodes as grounded-grid amplifiers will improve stability since they do not have to be neutralized. The type 6J4 tube is an example of a triode designed for grounded-grid operation at frequencies up through 400 megacycles.

3.? Operation of Tetrodes

In the tetrodes electron transit time is reduced by the high accelerating effect of the screen grid. The grid-plate capacity is low and neutralization is not required at the lower frequencies. At higher frequencies, neutralization is required, but is simpler to obtain. The lighthouse type of tetrode does not require neutralization.

4.0 RECEIVER NOISE

The useful sensitivity of any receiver is limited by noise. This noise is generated external to the receiver and also within the receiver. The external noise is usually not objectional at ultra high frequencies, therefore, the useful sensitivity of a UHF receiver is limited by the noise generated within the receiver, primarily in the first few stages where the signal is weak.

There are three types of noise generated within vacuum tubes, and all are important in UHF receivers. They are Shot-Effect Noise, Interception Noise, and Induced Grid Noise. Another type of noise is th generated in conductors and resistors by thermal agitation. Noise is random and varies ~~inversely~~ directly with bandwidth, therefore the use of minimum bandwith improves performance. Interception noise and induced grid noise can be minimized by the use of special triodes. Thermal agitation noise can be reduced by use of grounded-grid amplifiers.

5.0 LOSSES IN UHF CIRCUITS

The losses in UHF circuits consist of losses due to skin effect, conductor losses, dielectric losses, radiation losses, and eddy current losses.

Skin effect is the term used to describe the concentration of current near the surface of a conductor. Skin effect increases when the frequency is increased. The loss from skin effect can be reduced by using conductors made of copper tubing or copper ribbons. caused by magnetic field build up around a conductor

Conductor loss is the loss due to the resistance of the conductor and can be reduced by using conductors of low resistance.

Dielectric loss is the loss in dielectric materials. This loss increases when the frequency is increased and can be reduced by using dielectric materials with a low loss factor. The loss factor is the product of the dielectric constant and the power factor of the dielectric material.

Radiation loss is the loss due to undesired radiation from wiring and components. This loss increases when the frequency is increased and can be reduced by shielding and by arranging the wiring and components to cancel radiation.

Eddy current loss is the loss due to voltages being induced in metal components which cause currents to flow in the metal, thereby wasting power. This loss increases when the frequency is increased.

6.0 DISTRIBUTED EFFECTS IN UHF CIRCUITS

In UHF circuits the distributed capacitance and inductance is a large portion of the capacitance and inductance required in the tuned circuits. The reactance of the capacitance between the wiring and ground decreases as the frequency is increased. As a result more of the signal is bypassed to ground when the frequency is increased. The interelectrode capacities of vacuum tubes must also be considered since they may be a large portion of the capacitance required in the tuned circuits. Resistors have distributed inductance and capacitance. Inductors have distributed capacitance and capacitors have distritubed inductance.

To reduce distrubuted effects the circuits can be made smaller physically and closer together. Wiring should be as short as possible.

This document was scanned for free, and is free on the internet.
It is not to be sold on ebay or elsewhere.
It may be copied and given away for free.
Scan copyright Patrick Jankowiak

Contact information for this effort, and any other efforts at documenting and making freely available the manuals for the old laboratory classics, can be found at http://www.bunkerofdoom.com Please visit us.

Scan courtesy of Patrick Jankowiak KD5OEI

UHF MILITARY EQUIPMENT

CHAPTER TWO

R-361/GR RECEIVER

1.0 GENERAL

The type R-361/GR receiver is a double conversion superheterodyne receiver utilizing two crystal controlled oscillators. There are two i-f sections, the first of which is 40.4 mc and the second is 6 mc. In each case the oscillator frequency is below the desired signal frequency. The receiver circuitry incorporates avc action, a series noise limiter and squelch circuits. It is capable of delivering one watt of audio power to a 600 ohm load at the output terminals. When one watt of audio power is delivered to a 600 ohm load at the output terminals, the audio power delivered to a 600 ohm load at the monitor terminals is +15 dbm.

This receiver can be tuned to any frequency in the UHF band, extending from 225 mc to 399.9 mc, inclusive. Tuning is accomplished by using the proper crystal in the first oscillator and tuning the r-f and first oscillator sections.

The first oscillator crystal is a CR-32/U type, operated in a thermostatically controlled crystal oven. The crystal frequency is multiplied nine times. The second oscillator crystal is a CR-23/U type, operating at a fixed frequency of 34.4 mc. The first i-f is 40.4 mc and the second i-f is 6 mc.

The antenna input circuit is unbalanced and is designed to work with a 52 ohm transmission line of the coaxial type. This receiver will produce at least one watt of audio power into a 600 ohm load at the output terminals when receiving a 50 microvolt signal modulated 30 percent by any frequency between 400 and 3,000 cps.

output is terminated on a board at the rear of the receiver, where terminals are provided for muting, monitoring and changeover from balanced to unbalanced output. In addition, an "AUDIO OUTPUT" jack is provided on the front panel for plugging in a 600 ohm headset.

The selectivity of the receiver, with reference to 6 mc (the 2nd i-f section), is such that the bandwidth at -6 db is greater than 85 kc and less than 225 kc at -60 db, except for sets having serial numbers of 800 or over, where the bandwidth at -6 db is greater than 60 kc and less than 175 kc at -60 db. The sensitivity of the receiver is such that a 3 microvolt signal modulated 30 percent with a 1,000 cps audio tone, will produce at least 10 milliwatts of audio power with a signal to noise ratio of at least 10 db.

This equipment will operate on a power source of either 105 to 125 V, single phase, 50 to 60 cps or 210 to 250 V, single phase, 50 to 60 cps. The average power consumption is 125 watts and the peak power consumption is 140 watts. This receiver will operate satisfactorily on continuous duty at temperatures ranging rom -29°C (-20°F) to +55°C (+131°F). The overall frequency stability for the entire frequency range is ±10 kc. The equipment will be ready for operation five minutes after it is turned on, and should be within 10 kc of the required frequency after 20 minutes.

This receiver is provided with one fuse located on the front panel. The rating of the fuse depends on the power supply voltage used. A two ampere fuse is used for 115 V and a one ampere fuse for 230 V.

Several views of the receiver are shown in Figures 2-2 through 2-6.

2.0 THEORY OF OPERATION

With reference to Figure 2-7, the individual circuits of the receiver will now be considered in detail.

2.1 First Oscillator and First Tripler (V501)

The first oscillator is a Butler type circuit. Fundamentally it consists of a two-stage amplifier with sufficient positive feedback, from the cathode of the second to the cathode of the first amplifier, to sustain oscillation.

To understand the operation of this oscillator, imagine a random positive pulse at the cathode of the grounded grid amplifier V501A. Because the grid is grounded, a rise in cathode voltage will cause a decrease in plate current, therefore increasing the plate voltage. The positive pulse is then coupled to the grid of V501B. Since the cathode voltage follows the grid voltage, i.e., they are in phase, the positive pulse is coupled back to the cathode of the grounded grid amplifier, through the series mode crystal Y501. At series resonance, this crystal is a low impedance path of less than 40 ohms. The plate load of the grounded grid amplifier is tuned to the crystal frequency while the plate load of the output (tripler) amplifier is tuned to three times the crystal frequency. Oscillations are maintained since the feedback from the second to the first amplifier is sufficient to overcome losses. Note that one section of the dual triode tube V501 is designated as an oscillator. Actually, both sections of V501 are required in the operation of the oscillator. However, since the resonant frequency of the plate load of the "A" section is that of the crystal while that of the "B" section is three times that of the crystal, the "B" section is called the tripler.

If crystal Y501 fails, the capacity of its holder offers a low impedance path between the cathode of the amplifiers that comprise the 1st oscillator-1st tripler stage. To overcome the likelihood of the circuit going into oscillation, inductor L505 is connected in parallel with Y501.

The resultant parallel resonant circuit has sufficiently high impedance to effectively open the cathode feedback circuit.

2.2 First Amplifier (V502)

The first amplifier is a Class C power amplifier, used to provide enough drive for the second tripler. The plate circuit is tuned to three times the oscillator frequency.

2.3 Second Tripler (V503)

The second tripler is a Class C amplifier used as a frequency multiplier. The tuned plate circuit, U501, is tuned to nine times the crystal frequency. U501 consists of a strap inductance mechanically and electrically attached to an air variable capacitor as shown in figure 2-1. The tuning action is as follows: When the capacitor is completely closed, there is maximum capacity and inductance. Therefore, the second tripler is tuned to the lowest frequency. As the capacitor is opened, the capacity decreases and the rotor begins to fill the space within the inductor strap. Since the rotor is brass, this has the same effect as tuning a coil with a brass slug, that is, it decreases the inductance. Note that this element is essentially a variable capacitor connected in parallel with and ganged to a variable inductor. This combined action results in a greater tuning range than would be available from the change in tuning capacity only.

2.4 Second Amplifier (V504)

The second amplifier is a Class C power amplifier used to provide the required drive to operate the first mixer efficiently. The plate tank circuit, U502 is tuned to nine times the crystal frequency. The construction of U502 is the same as U501.

2.5 Second Oscillator (V505)

The second oscillator is a Butler type circuit similiar to the first oscillator. Section "B" is a grounded grid amplifier. Its plate circuit is tuned to 34.4 mc. Section "A"of V505 is a cathode follower as the plate is at r-f ground potential.

2.6 First R-F Amplifier (V401) and Second R-F Amplifier (V402)

The first and second r-f amplifiers are grounded grid triodes. The antenna circuit input impedance of U401 is approximately 50 ohms over the frequency range. The construction of U401, U402, U403 and U404 is similiar to U501 and U502.

2.7 Third R-F Amplifier (V403)

V403 is a shunt fed r-f amplifier. Amplification in this stage has been reduced, to remove all traces of regeneration, by tapping down on the tank circuit U403 of the previous stage and by placing a loading resistor, R420, across the output tank circuit U404.

2.8 First Mixer (V404) and First I-F (40.4-Mc) Network

The first mixer is a pentode with the r-f signal fed to the first grid, and the signal from the first oscillator injected on the cathode. The oscillator signal frequency at this point is nine times the frequency of the first oscillator crystal Y501. The output frequency of the first mixer is 40.4 mc.

The first i-f section is a triple tuned network, consisting of transformer T301, capacitors C301, C351 and C425 and inductor L307. Because of the capacity of C301, the over-all triple tuned network is just under critical coupling. T301 is tuned to 40.4 mc. L307 in parallel with C351 is also tuned to 40.4 mc.

2.9 Second Mixer (V301)

The second mixer is a pentagrid converter. The first i-f signal (40.4 mc) is fed to the third grid of V301. The 34.4 mc signal from the second

oscillator, V505, is injected on the first grid, and the plate load is tuned to 6 mc.

Capacitor C337 is not used in receivers with serial numbers of 800 and above. Eliminating this capacitor reduces adjacent channel interference by narrowing the bandwidth at 6 mc.

2.10 Second I-F (6-Mc) Section (V302, V303 and V304)

The 6-mc i-f circuits are conventional pentode amplifiers. Four slightly overcoupled, double-tuned i-f transformers provide a selectivity curve having a broad peak with comparatively sharp sides.

Capacitor C352 is not used in receivers with serial numbers of 800 and above. Eliminating this capacitor reduces adjacent channel interference by narrowing the bandwidth at 6 mc.

2.11 Second Detector and Noise Limiter (V305)

One diode, V305A, operates in the usual form of second detector. The other diode, V305B, has its plate circuit connected across a portion of the second detector-diode-voltage divider and acts as a variable resistor in series with the audio output circuit. The audio is taken from the cathode of the noise limiting diode and as long as the noise pulses are of less amplitude than the audio frequency components of the desired signal, the noise limiting diode functions like a closed switch and passes the audio on to the a-f section of the receiver. When the noise impulse exceeds the signal component, the noise limiting diode performs as an open switch, or high resistance, and prevents any signal or noise from passing through the audio amplifier.

The modulated r-f voltage appearing across the secondary of T306 is detected by V305A. R322 and R323 have been selected to give the proper load for V305A while preventing the noise limiter from clipping below 80-percent modulation.

In other words, noise pulses and audio signals above 80-percent modulation will be clipped. The rectified carrier voltage across R322 is used as a reference voltage between the plate and cathode of the noise limiting diode (V305B). This reference voltage does not vary with the audio frequencies or with noise pulses, because of the long time-constant in the R-C network composed of R324, R325 and C326. The polarity of this reference voltage is such that the noise limiting diode will conduct. The path for the audio signal is from the top side of R323, through the noise limiting diode, through C327, through R326, through the "A-F GAIN" control to ground, then to the ground side of R323. The arrangement of the circuit is such that the positive half of the audio cycle applies a negative voltage on the plate of the noise limiting diode, with respect to its cathode. Also, positive noise pulses developed across R323 will appear as negative pulses on the plate of the noise limiting diode. If these positive noise pulses are greater than the reference voltage, the limiting diode is cut off and the path for the audio signal is opened and there is no output from the receiver. Likewise, if the positive half of the audio cycle is greater than the reference voltage, the limiting diode is cut off.

2.12 Squelch Circuits and First Audio Amplifier (V306, V307A and V308A)

The purpose of the squelch circuit is to reduce the objectionable noise that occurs between periods of signal input. Automatic volume control action increases the sensitivity of the receiver when there is weak or no signal input and causes an objectionable hiss or roar in the loud-speaker if the audio volume control is turned up very high. The squelch circuit is designed to silence the audio frequency amplifier for all carrier signals below a certain predetermined level.

A direct-coupled amplifier (V307A) and a diode (V308A) are connected in the grid circuit of the first audio amplifier (V306A) in such a manner that it is biased beyond cutoff when, in the absence of an r-f signal input, no avc voltage is impressed on the grid of the direct-coupled amplifier. When the r-f signal input is sufficient to set up a large enough

value of avc voltage, the diode will conduct, acting like a switch, and permit the a-f amplifier bias to reduce to a value that permits normal audio output. The first audio amplifier is paralleled with an auxiliary amplifier (V306B) whose audio input level can be adjusted so as to by-pass incoming a-f signals around the first audio amplifier permitting reduced output while the first audio amplifier is "squelched".

The squelch circuit is in operation when switch S302 is open. With a weak or no signal input, the avc voltage will not be sufficiently negative to cut off the squelch amplifier (V307A). Resistor R337 is the plate load of the squelch amplifier (V307A). Since the value of R337 is much greater than the plate resistance of V307A, the voltage on the plate of V307A, with respect to ground, is small. This same positive voltage is on the grid of V306A and on the plate of the squelch diode (V308A). However, V306A is cut off, because the positive voltage on its cathode, with respect to ground, is greater than the positive voltage on its grid, with respect to ground. This positive voltage on the cathode of V306A is the voltage drop across R331, which is part of a voltage divider composed of R331, R340 and R341. This bleeder is connected between +200 volts and ground. The positive voltage on the cathode of V306A is also on the cathode of the squelch diode (V308A). Since the positive voltage on the cathode of V308A, with respect to ground, is greater than the positive voltage on the plate of V308A, with respect to ground, V308A does not conduct.

Now, if switch S302 is closed, the positive voltages on the grid and cathode of V306A would be removed, the operation of V306A would be normal and its bias would be determined by R330 in its cathode circuit. With S302 open, a signal that is strong enough to make the squelch diode conduct will have the same effect as closing S302, because the squelch diode is connected across the switch. Squelch diode V308A will conduct when the avc voltage is large enough to cut off the squelch amplifier (V307A). When V307A is cut off, the positive voltage on its plate increases. This increased voltage is also on the plate of the squelch diode

(V303A), causing V308A to conduct, giving the effect of closing switch S302.

Resistor R330 in the cathode circuit of V306A is unbypassed to decrease audio distortion. The strength of signal needed to overcome the squelch is determined by setting of the "R-F GAIN" control, which adjusts the amplification of the i-f strip. As the gain of the i-f strip is decreased, a larger signal is required at the antenna to produce sufficient ave voltage to close the squelch. For example, if the "R-F GAIN" control is set to make the receiver operate at an input signal of 5 microvolts, a weaker signal will be heard only if the "AUDIO QUIETING DB" control is set for the weaker signal.

2.13 Second Audio Amplifier and Power Output Stages (V307B and V309)

The output of V306 is fed to the second audio amplifier V307B for further amplification. The output of V307B is used to drive the power amplifier tube V309. This amplifier is required to supply adequate audio power to output transformer T308. The cathode and plate of this tube have separate tuned networks. These tuned networks enable the audio response above 1,000 cps to taper off gradually. A pad consisting of R346, R347 and R348 supplies +15 dbm of power for a 600 ohm telephone line when the "A-F GAIN" control is set to deliver one watt of audio power into a 600 ohm load connected at J301. The monitoring output is obtained between terminals 3 and 4 on terminal board E303. Terminals 1 and 2 are provided for a muting circuit. These terminals are in parallel with the "AUDIO OUTPUT" jack J301 and are connected across the secondary winding of T308. In some installations where receivers and transmitters are connected to operate on a common antenna system, the muting terminals are connected to a shorting relay in the transmitter. With this relay in the transmitting position, the antenna is connected to the transmitter and the muting terminals short circuited to prevent the receiver output from operating during transmission periods. The remaining terminals 5 and 6 on E303 are used to connect the center tap of the output winding on T308 to ground. By connecting

a jumper between 5 and 6 the audio output across J301 is balanced to ground.

2.14 Automatic Volume Control (AVC) (V308B and V310)

The function of the avc circuit is to permit maximum gain until a predetermined output level is reached, and then to reduce the gain with increasing signal so as to keep the output level constant. In the R-361/GR receiver, constant output level is maintained by using a delayed avc with a forward feed.

With no avc, the output is proportional to the input, limited only by some practical considerations such as the signal handling capabilities of tubes in the various stages of the receiver. With ordinary avc, the output is no longer proportional to the input; the avc goes into action as soon as a signal is received and the system can handle larger signals.

An amplified avc is characterized by a more rigid control of the output, while delay in the operation of this avc permits a usuable output at lower input voltages. If a portion of this avc voltage is fed to a stage following the avc take-off point, it is possible to have fairly constant output with variable input, and finally to have the output decrease with very strong signals. The R-361/GR receiver utilizes this type of avc action.

Before a signal is applied, V310 is conducting, making the cathode of V308B positive with respect to ground while the plate of V308B is at ground potential. As a signal is supplied from the plate of V303 in the 6 mc i-f section, it is amplified by V310 and fed to the avc detector V308B. When the positive amplitude on the plate of V308B is greater than the d-c voltage across R354, V308B will conduct. The voltage across R354 is the effective avc delay voltage for the circuit. When V308B is conducting, the top of R353 becomes negative with respect to ground. This voltage is then fed back to the previous stages, and

also ahead to V304 in the 6 mc i-f section. Note that the avc voltage is derived from V303, amplified and delayed by its own avc amplifier (V310) and detected by its own detector (V308B); the developed avc voltage is then applied to almost all stages in front of V303 and also to V304. Such a system is called an amplified, delayed avc with forward feed.

2.15 Power Supply (V311 and V312)

A full- wave rectifier circuit is used for the power supply. V311 and V312 are connected in parallel to provide the current and voltage requirements for the receiver. A capacitor input filter network consisting of C347, C348 and L305 is used in the B+ line to reduce the ripple voltage. A high frequency capacitor input filter is incorporated in each side of the a-c line to reduce radiation.

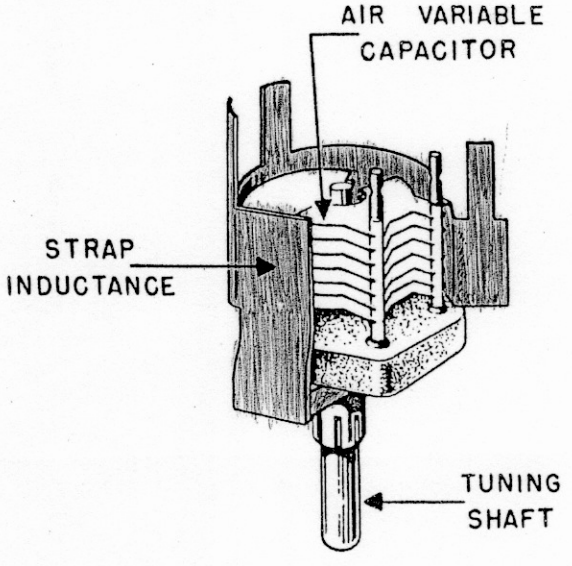

Figure 2-1. Radio Receiver R-361/GR, R-F Tuning Unit

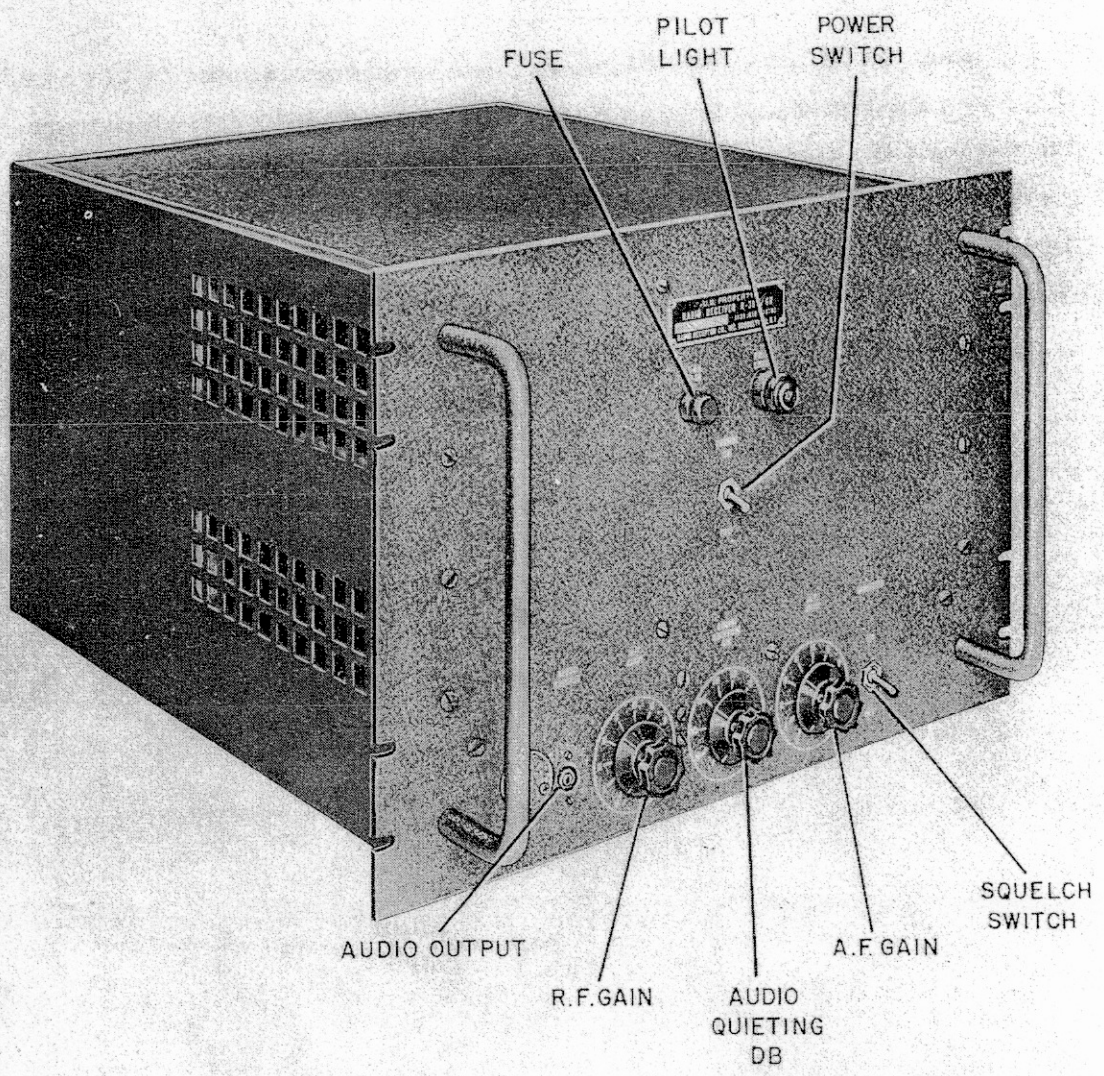

Figure 2-2. Radio Receiver R-361/GR, Front View

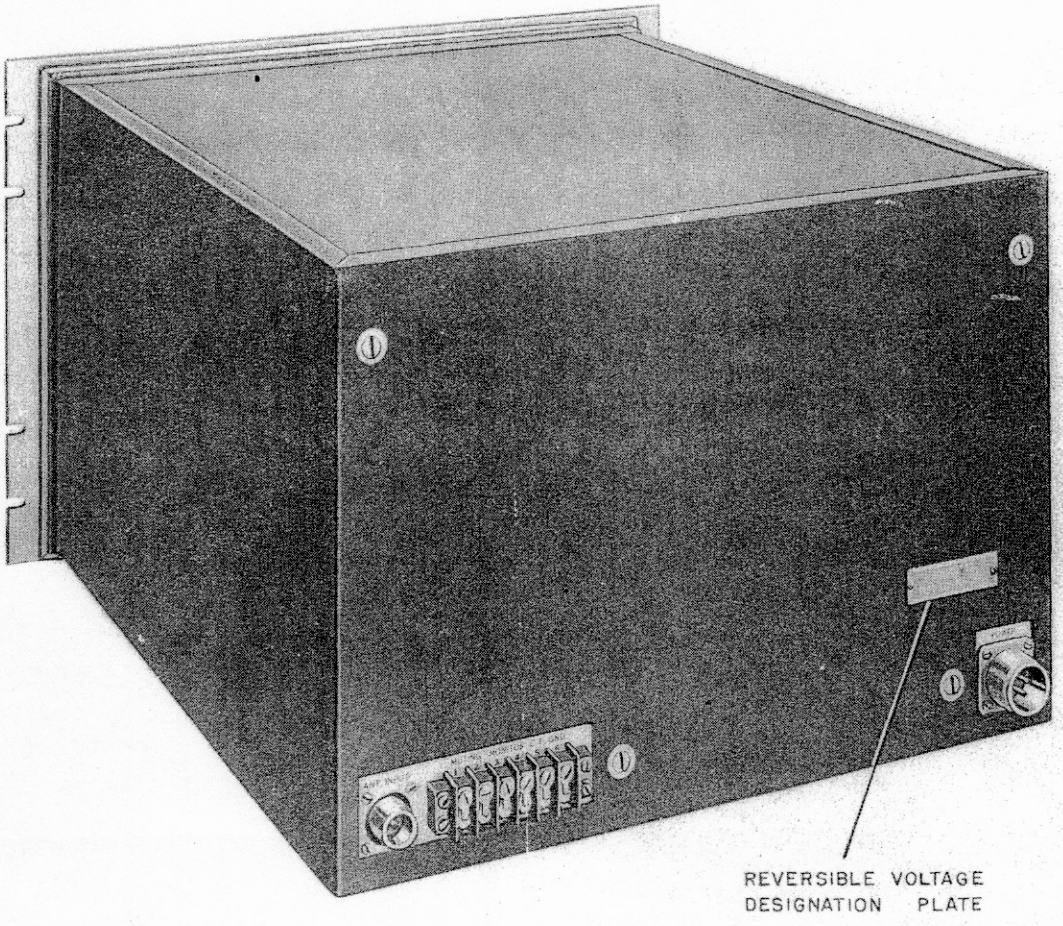

Figure 2-3. Radio Receiver R-361/GR, Rear View, Dust Cover On

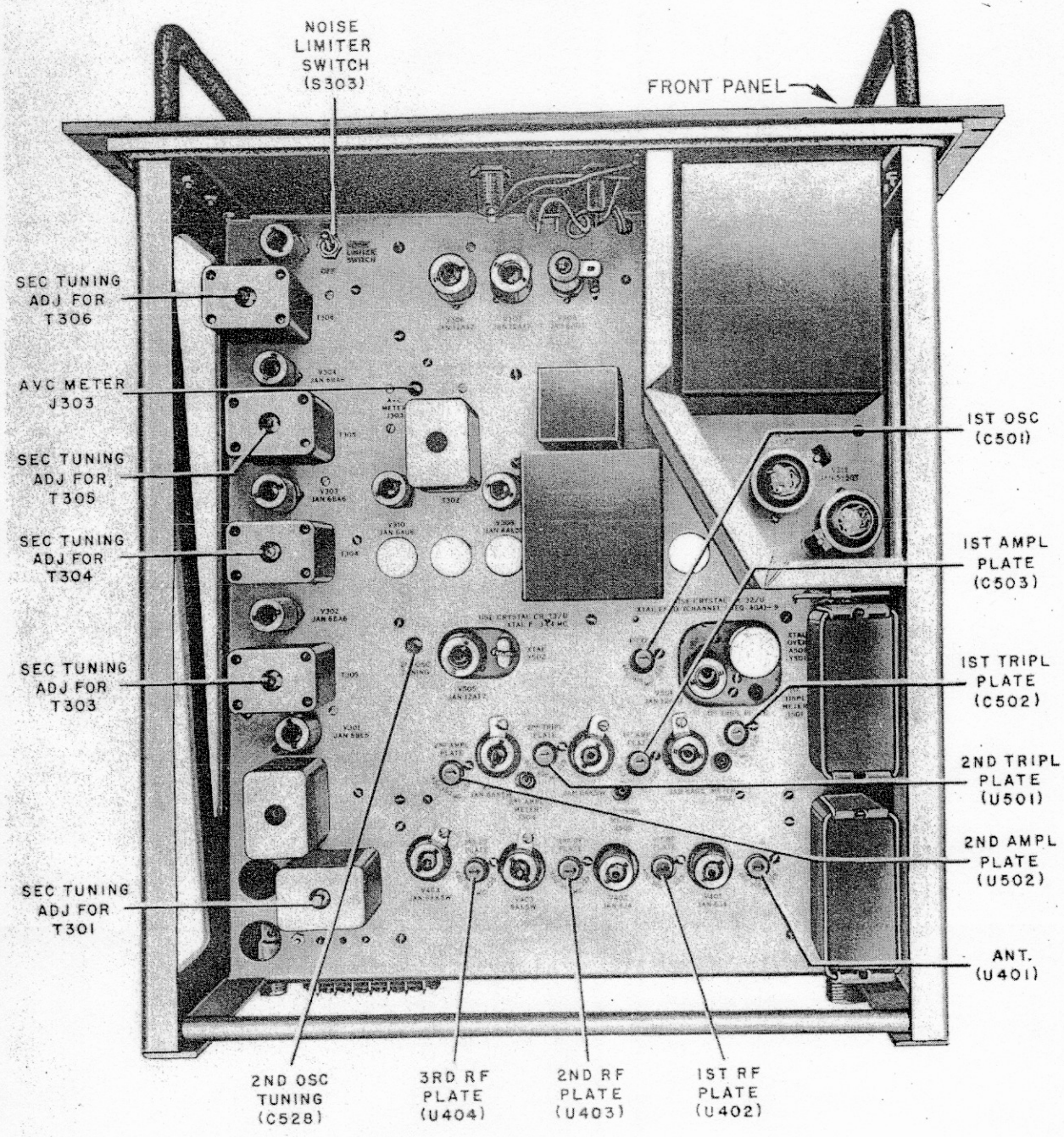

Figure 2-4. Radio Receiver R-361/GR, Top View, Dust Cover Removed

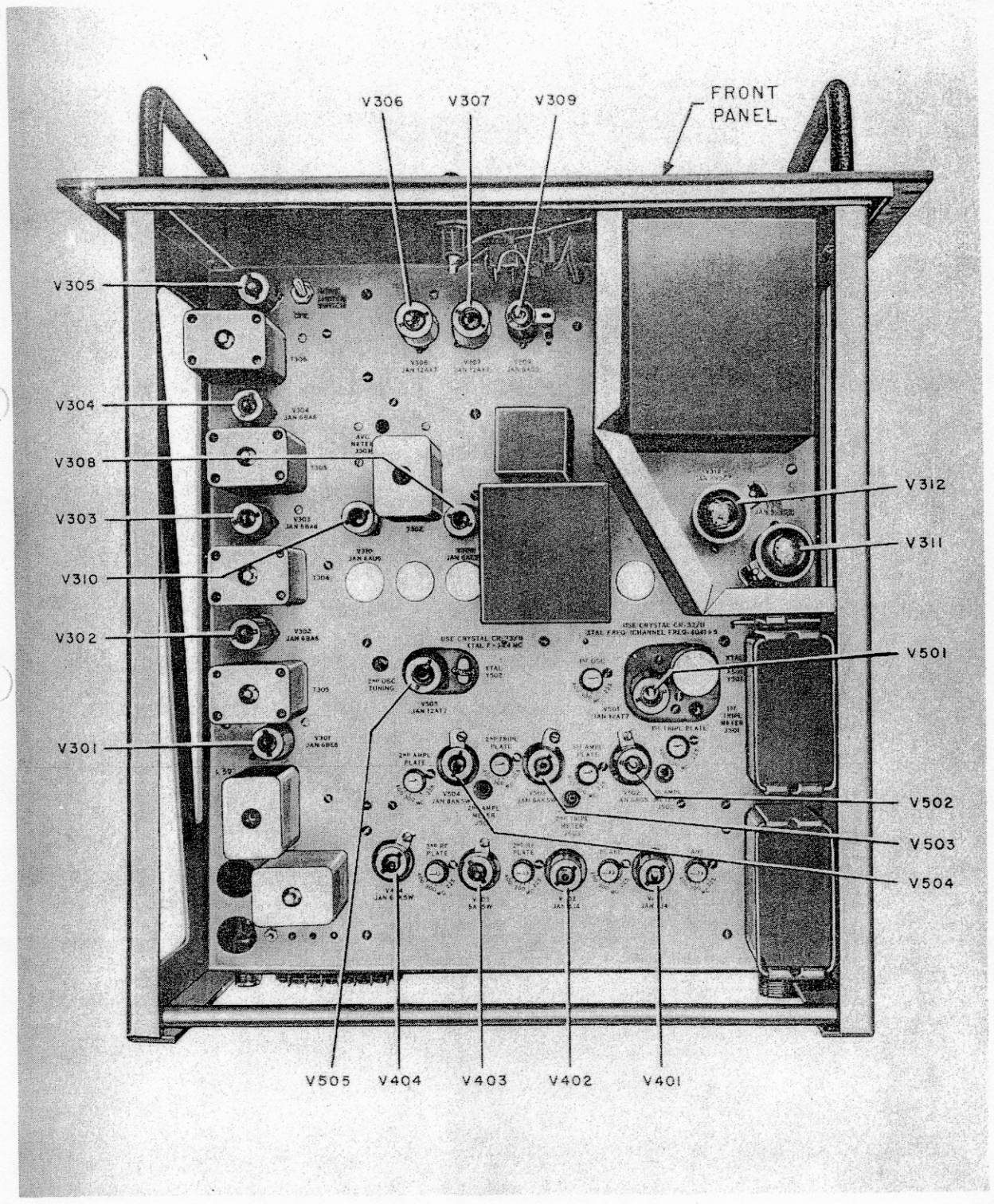

Figure 2-5. Radio Receiver R-361/GR, Top View, Tube Location

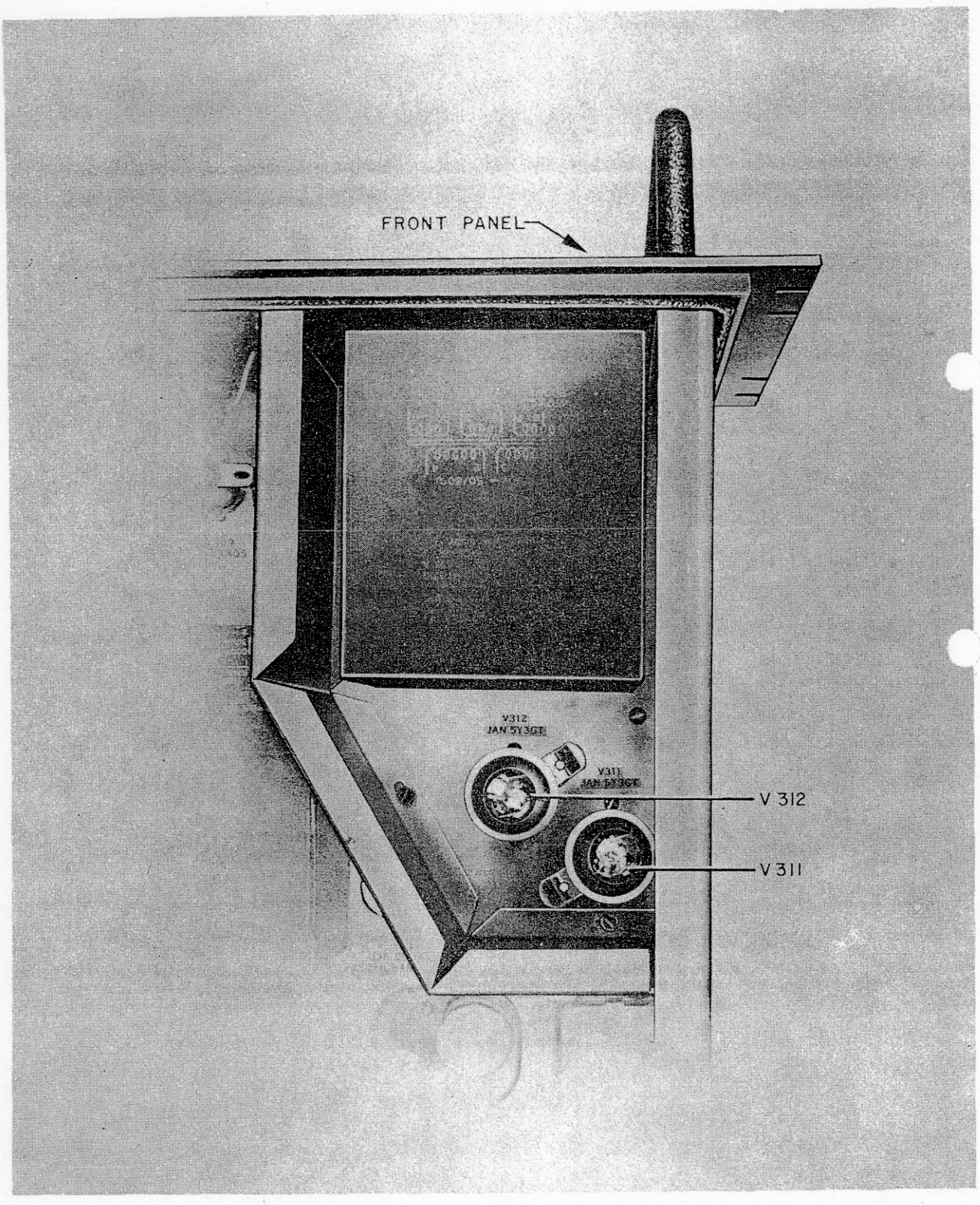

Figure 2-6. Radio Receiver R-361/GR, Power Supply Section, Dust Cover Removed

3 uv input modulation 30% TRC
will produce at: 10 with S/N at least 10 db

osc. Butler CR-32/U
d " " CR-23/U

1st i-f - three tuned circuits
40.4 mc. primary purpose
good image rejection

2nd i-f - three stages of
amplification 6 mcs. primary
purpose selectivity.

$\frac{\text{r-f minus 1st i-f}}{9} = \text{Xtal freq.}$

image freq = r-f ± (2 i-f)

r-f - 80.8

$i\text{-}f = (f_s - f_o)$

$f_s - 2(f_s - f_o)$

$f_i = 2f_o - f_s$

Uses series Noise Limiter & squeld circuit for noise control

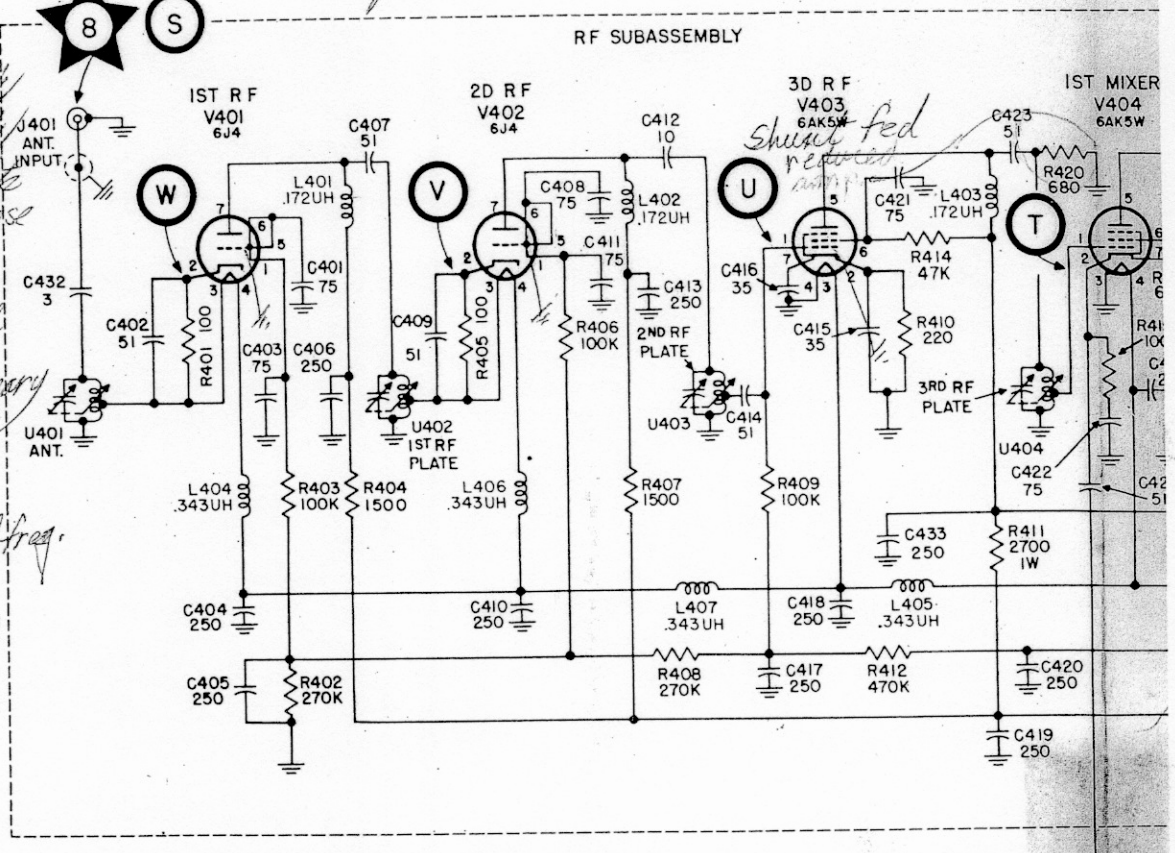

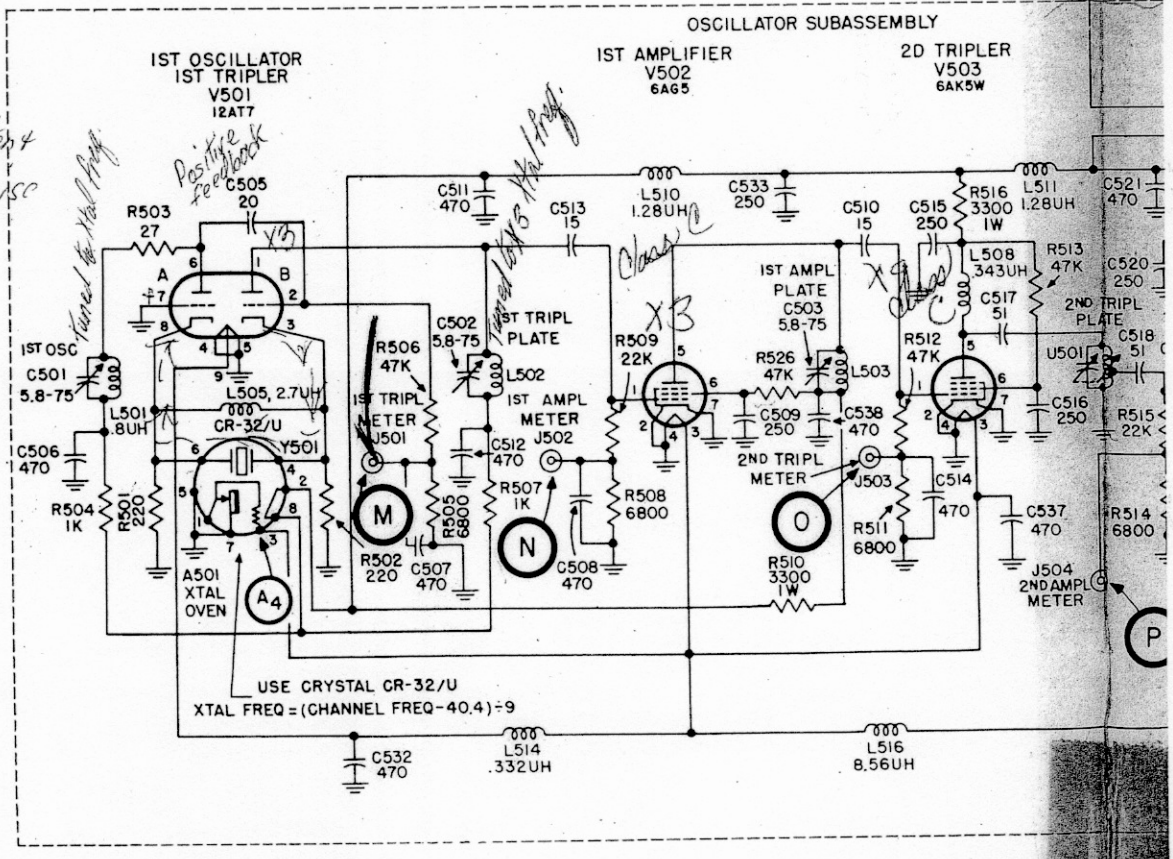

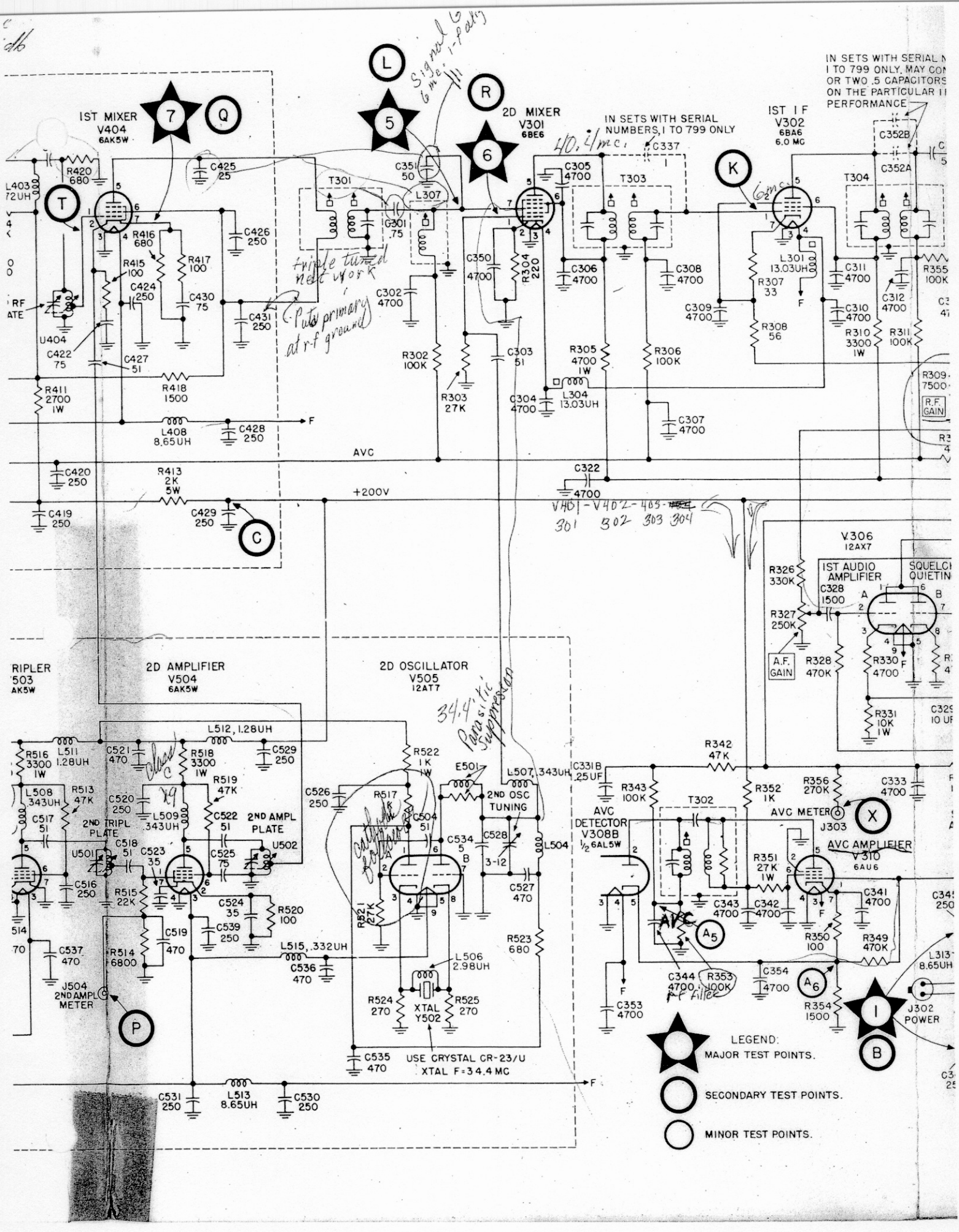
IST MIXER
V404
6AK5W
2D MIXER
V301
6BE6
IST I F
V302
6BA6
6.0 MC
IN SETS WITH SERIAL NUMBERS, 1 TO 799 ONLY
IN SETS WITH SERIAL N
1 TO 799 ONLY. MAY CON
OR TWO .5 CAPACITORS
ON THE PARTICULAR I
PERFORMANCE
Signal G
6 mc. i-path
40.4 mc.
6 mc.
Triple tuned network
Puts primary at r-f ground
AVC
+200V
V306
12AX7
IST AUDIO AMPLIFIER
SQUELCH QUIETIN
A.F. GAIN
R.F. GAIN
2D AMPLIFIER
V504
6AK5W
2D OSCILLATOR
V505
12AT7
34.4 mc.
Para sitic Suppressor
2ND TRIPL PLATE
2ND AMPL PLATE
2ND OSC TUNING
AVC DETECTOR
V308B
1/2 6AL5W
AVC METER
AVC AMPLIFIER
V310
6AU6
XTAL Y502
USE CRYSTAL CR-23/U
XTAL F=34.4 MC
J504 2ND AMPL METER
J303
J302 POWER
LEGEND:
MAJOR TEST POINTS.
SECONDARY TEST POINTS.
MINOR TEST POINTS.

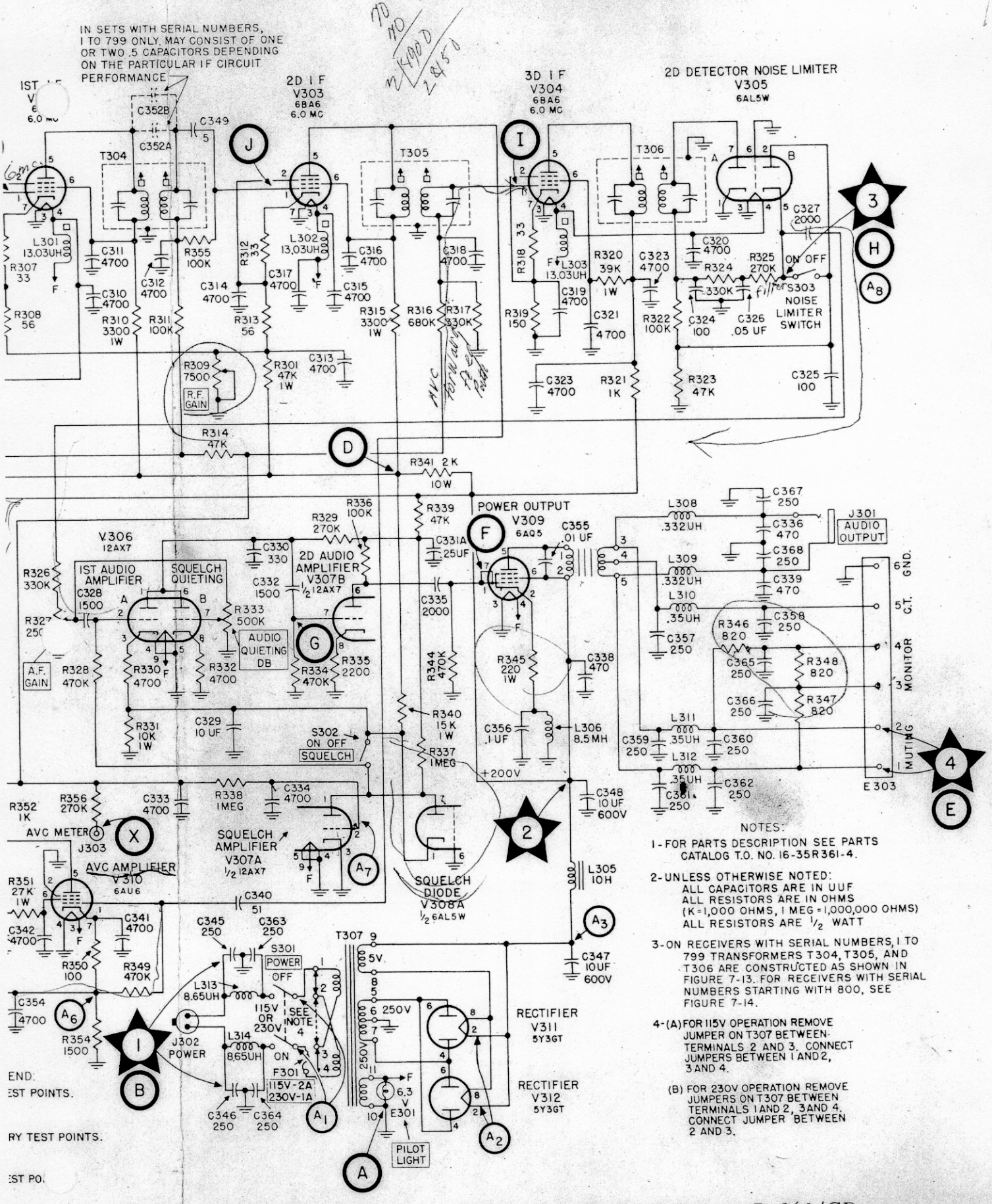

NOTES:

1 - FOR PARTS DESCRIPTION SEE PARTS CATALOG T.O. NO. 16-35R361-4.

2 - UNLESS OTHERWISE NOTED:
ALL CAPACITORS ARE IN UUF
ALL RESISTORS ARE IN OHMS
(K = 1,000 OHMS, 1 MEG = 1,000,000 OHMS)
ALL RESISTORS ARE ½ WATT

3 - ON RECEIVERS WITH SERIAL NUMBERS, 1 TO 799 TRANSFORMERS T304, T305, AND T306 ARE CONSTRUCTED AS SHOWN IN FIGURE 7-13. FOR RECEIVERS WITH SERIAL NUMBERS STARTING WITH 800, SEE FIGURE 7-14.

4 - (A) FOR 115V OPERATION REMOVE JUMPER ON T307 BETWEEN TERMINALS 2 AND 3. CONNECT JUMPERS BETWEEN 1 AND 2, 3 AND 4.

(B) FOR 230V OPERATION REMOVE JUMPERS ON T307 BETWEEN TERMINALS 1 AND 2, 3 AND 4. CONNECT JUMPER BETWEEN 2 AND 3.

Figure 2-7 Radio Receiver R-361/GR

UHF MILITARY EQUIPMENT

CHAPTER THREE

T-282/GR TRANSMITTER
MD-141/GR MODULATOR-POWER SUPPLY

1.0 GENERAL

1.1 T-282/GR Transmitter

The T-282/GR Transmitter (Figure 3-1) is a single channel crystal-controlled transmitter capable of supplying 100 watts into a 52 ohm load. The transmitter circuitry consists of a crystal-controlled oscillator-tripler, 1st doubler, 2nd doubler, buffer amplifier, driver-tripler amplifier, and power amplifier. An antenna change-over relay, receiver muting, push-to-talk voice operation, and monitoring facilities are also provided. The frequency range of the transmitter is 225.0 mc to 399.9 mc. The transmitter can be tuned to any frequency in this band by using the proper crystal and tuning the r-f circuits. The output coupling circuit is unbalanced, one side being grounded, and it is designed to work into a 52 ohm transmission line of the coaxial type. The power output and percentage modulation of the transmitter may be checked on a calibrated meter on the transmitter. Side tone output permits the operator to aurally monitor the audio component of the transmitted signal.

The over-all frequency stability for the entire frequency range is ± 10 kc. The equipment will be ready for operation five minutes after it is turned on and should be within 10 kc of the required frequency after twenty minutes. The transmitter may be operated continuously at temperatures ranging from -29° C (-20° F) to +55° C (+131° F).

All tubes used in the transmitter are listed in Table 3-2 and all fuses are listed in Table 3-4. The various panel controls and adjustment points of the transmitter are shown in Table 3-6 and Figure 3-2.

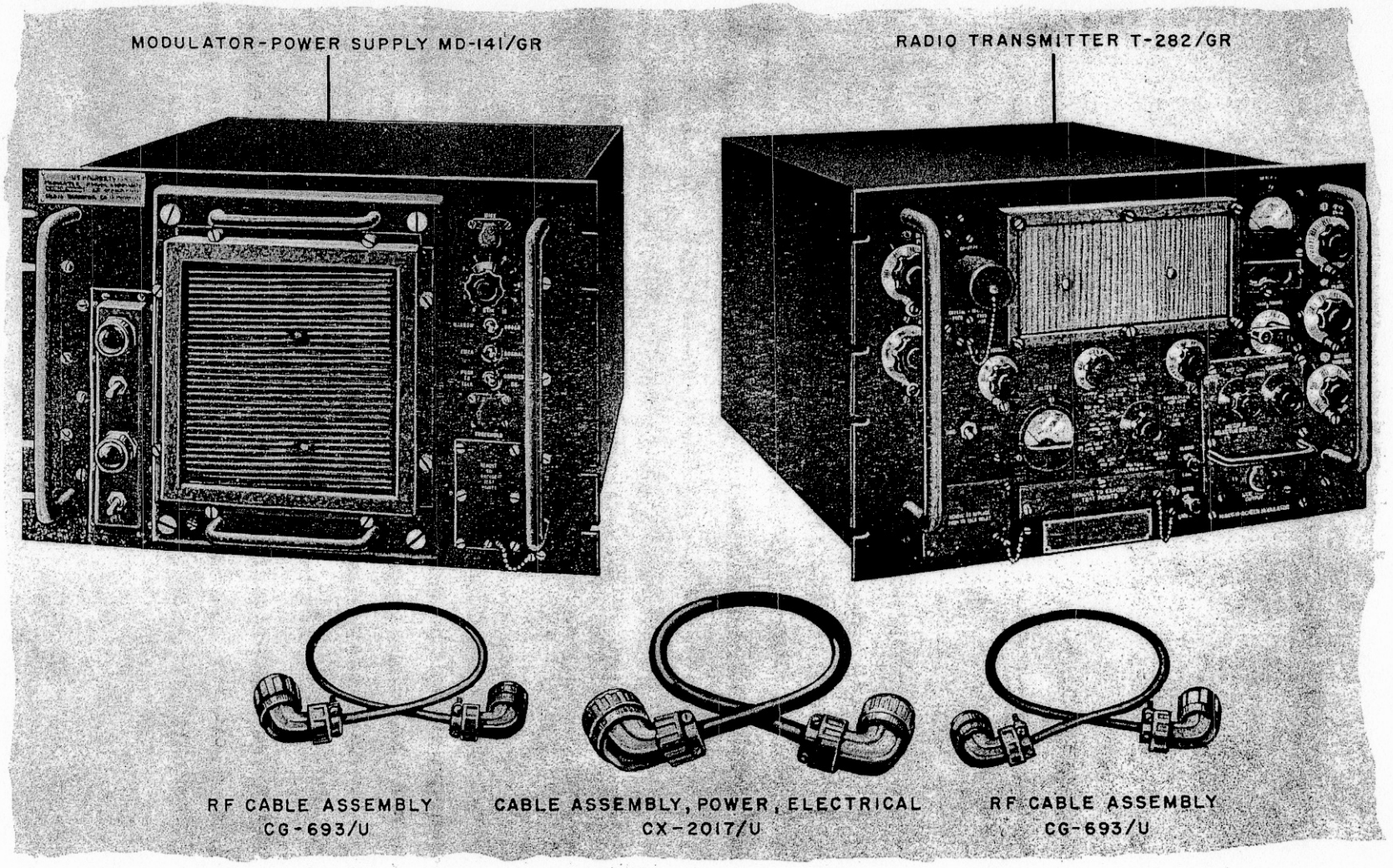

Figure 3-1. Radio Transmitter T-282/GR, Modulator-Power Supply MD-141/GR, and Interconnecting Cables.

1.2 MD-141/GR Modulator-Power Supply

All references to Modulator-Power Supply MD-141/GR (Figure 3-1) are also applicable to Modulator-Power Supply MD-141A/GR, with the exception of the duty cycle (determined by transformer T202). Modulator-Power Supply MD-141A/GR may be operated continuously at temperatures ranging from -29° C(-20° F) to +55° C (+131° F). Modulator-Power Supply MD-141/GR must be operated intermittently (ratio of "carrier on" to "carrier off" of one minute to five minutes) at temperatures exceeding +30° C (+86° F).

The MD-141/GR Modulator-Power Supply consists of a modulator and power supply in one integral unit. The modulator has provisions for a 50 ohm or 600 ohm input impedance. The 50 ohm input impedance is for local operation using a T-17 or similiar type carbon microphone; the 600 ohm input impedance is used for remote operation over a 600 ohm line. Audio amplifiers are used to amplify the incoming signal to the desired level for modulating the power amplifier in the transmitter. Automatic modulation limiting maintains the average modulation at a high level. An audio signal input of -45 dbm is sufficient to permit 95 percent modulation. The audio frequency response of the equipment, for broad band transmission, does not vary more than 4 db between 200 and 20,000 cps. When using narrow band transmission, the response is down less than 5 db at 400 cps and 3,000 cps, with 1,000 cps as reference level, and down a minimum of 10 db at 200 cps and 5,000 cps. The audio distortion does not exceed 10 percent when: the rf carrier is modulated 95 percent; the audio signals are between 200 and 20,000 cps; the audio input level is -45 dbm; and the automatic modulation limiting circuit is in operation.

The power supply provides high and low dc voltages as well as bias voltages for the modulator and transmitter. The power supply also supplies filament voltages for the modulator and ac voltage to the transmitter for the filament transformers and blower in the transmitter.

This equipment will operate on either of the following ac sources: 105 to 125 volts, single phase, 50 to 60 cps; or, 210 to 250 volts, single phase, 50 to 60 cps. Table 3-1 is a summary of the power input requirements, with the "BUCK-BOOST" switch, on the rear of the modulator-power supply, turned to the "BOOST" position.

All tubes used in the modulator-power supply are listed in Table 3-3 and all fuses are listed in Table 3-5. The various panel controls and adjustment points of the modulator-power supply are shown in Table 3-7 and Figures 3-3 and 3-4.

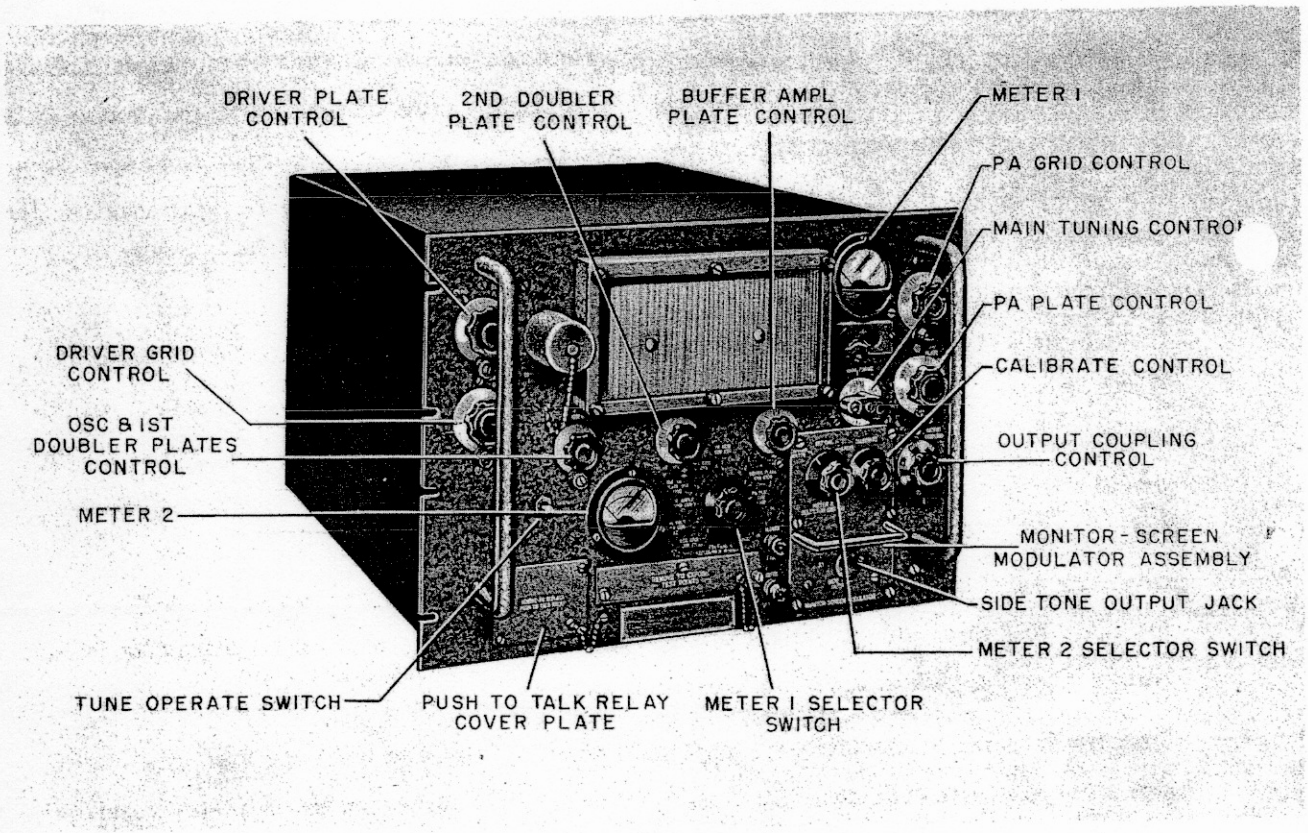

Figure 3-2. Radio Transmitter T-282/GR, Front Panel

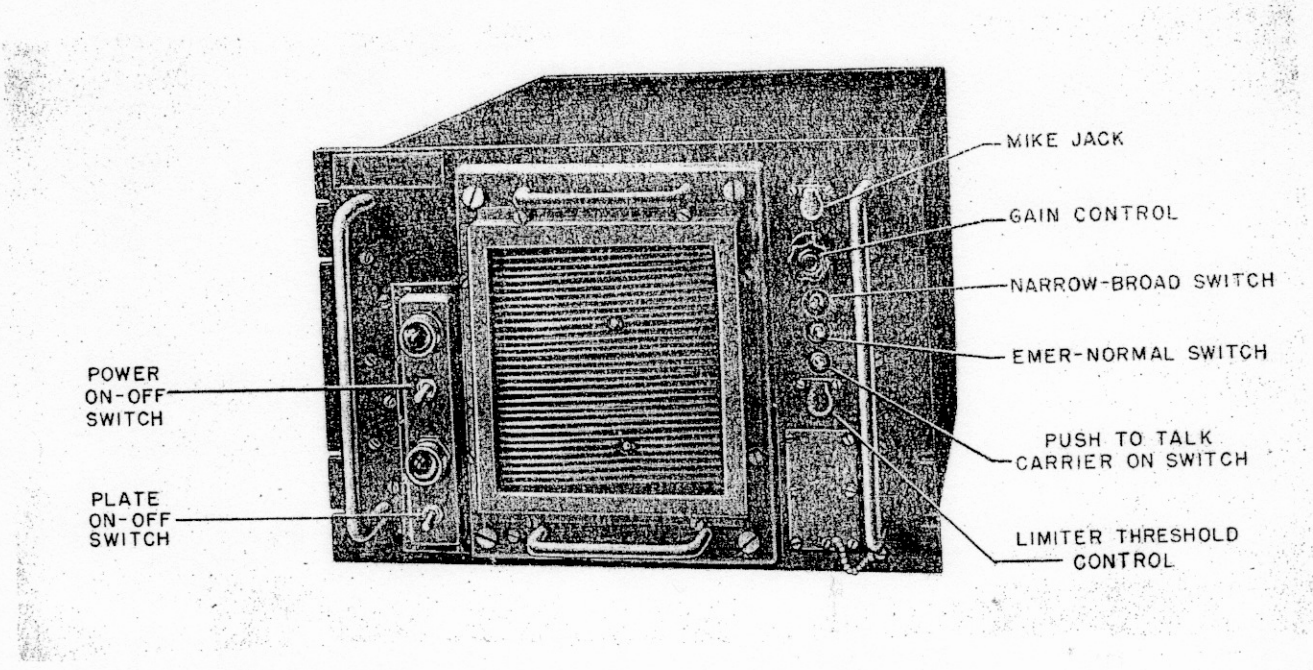

Figure 3-3. Modulator-Power Supply MD-141/GR, Front Panel

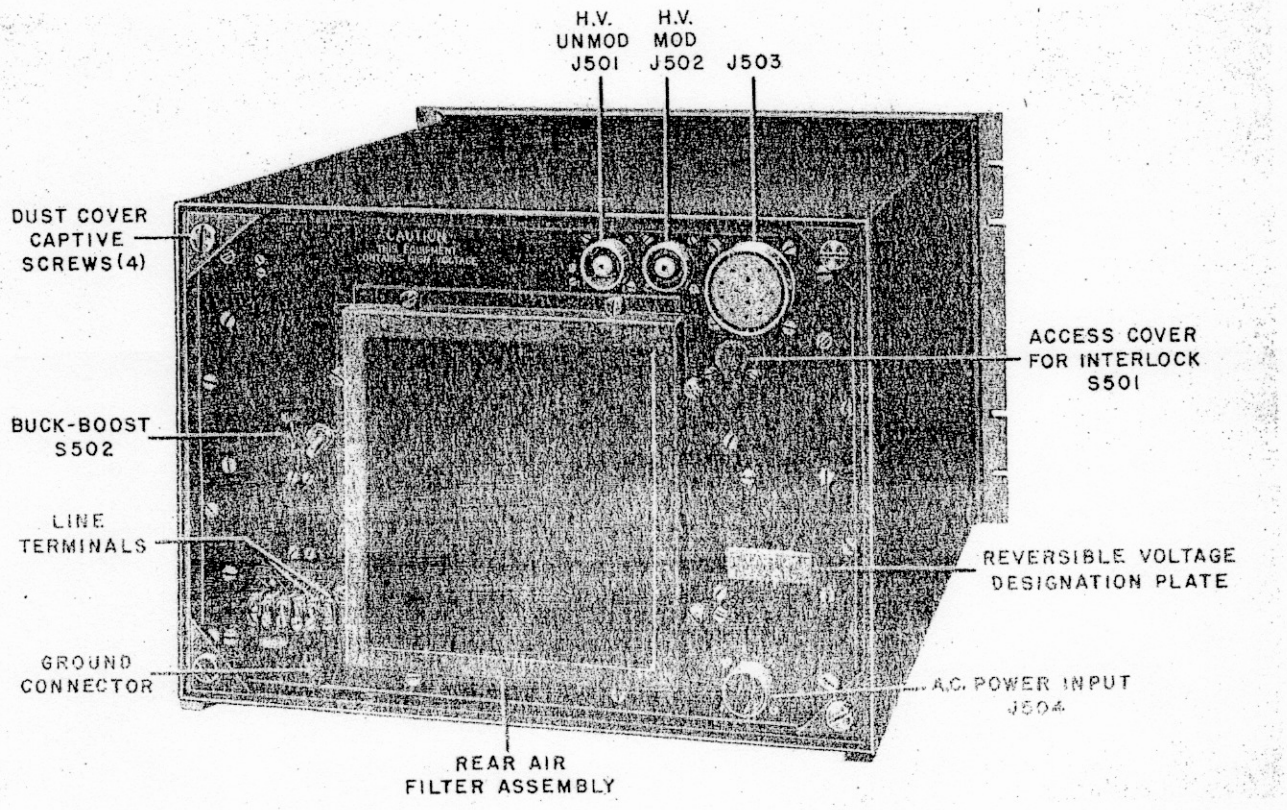

Figure 3-4. Modulator-Power Supply MD-141/GR, Rear View

Voltage Supply	120 W, 95 Percent Modulated Carrier			Carrier Off		
	Amperes	Watts	Power Factor	Amperes	Watts	Power Factor
115	12.5	1250	0.87	3.4	380	0.97
230	6.25	1250	0.87	1.7	380	0.97

Table 3-1. Power Input Requirements

Quantity	JAN Type Number	Reference Symbol	Function
1	6AH6	V601	Oscillator-tripler
1	5763	V602	First doubler
1	5763	V603	Second doubler
1	5763	V706	Screen modulator
1	832A	V604	Buffer amplifier
1	4X150A	V901	Tripler-driver
2	4X150A	V902	Power amplifier
		V903	Power amplifier
1	12AT7	V701A	Side-tone amplifier
		V701B	Modulation monitor amplifier
1	12AX7	V702A	Modulation monitor amplifier
		V702B	Modulation monitor rectifier
3	OB2	V703	Voltage regulator
		V704	Voltage regulator
		V705	Voltage regulator

Table 3-2. Tube Complement of Radio Transmitter T-282/GR

Quantity	JAN Type Number	Reference Symbol	Function
1	6C4	V301	Narrow band amplifier
1	12AX7	V302	Phase inverter
2	6BA6	V303	Audio frequency amplifier
		V304	Audio frequency amplifier
2	6AQ5	V305	Modulator driver
		V306	Modulator driver
2	811-A or 811	V201	Modulator
		V202	Modulator
1	6AL5W	V203	Automatic modulator limiter
1	5R4WGY	V105	Bias voltage rectifier
2	3B28	V101	High voltage rectifier
		V102	High voltage rectifier
2	3B28	V103	Low voltage rectifier
		V104	Low voltage rectifier

Table 3-3. Tube Complement of modulator-Power Supply MD-141/GR

Quantity	Bussman Type	Rating	Reference Symbol	Function
1	MJB	1/100 amp, 250 V	F801	"METER 1" protection
1	MDL	Slow-Blow, 1 amp, 250 V	F803	B801 blower motor protection
2	MJW	1/16 amp, 250 V	F901	V901 screen protection
			F902	V902, V903 screen protection

Table 3-4. Fuse Complement of Radio Transmitter T-282/GR

Quantity	Bussman Type	Rating	Reference Symbol	Function
2	MDL	Slow-Blow, 1 amp, 250 V	F101 F103	B401 blower motor protection Low voltage power supply protection
2	MTH	8 amp, 250 V	F102 F201	High voltage power supply protection 230 V supply line
1	AGC	3 amp, 250 V	F104	Filament and bias supply protection
1	ABC	15 amp, 250 V	F202	115 V supply line

Table 3-5. Fuse Complement of Modulator-Power Supply MD-141/GR

Name	Function
METER 1 SELECTOR SWITCH	Selects circuit to be metered
METER 2 SELECTOR SWITCH	Selects power output or percentage modulation indication
METER 1	Indicates plate and grid currents
METER 2	Indicates power output or percent modulation
CALIBRATE	Control to calibrate "METER 2" before reading percent modulation
SIDE TONE OUTPUT	Jack to connect headset plug for monitoring transmission
TUNE-OPERATE	Switch to reduce power output
MAIN TUNING	Tuning control
DRIVER PLATE	Tuning control
DRIVER GRID	Tuning control
OSC & 1st DOUBLER PLATES	Tuning control
2nd DOUBLER PLATE	Tuning control
BUFFER AMPL PLATE	Tuning control
PA GRID	Tuning control
PA PLATE	Tuning control
OUTPUT COUPLING	Tuning control

138/3
9/58

Table 3-6. Controls of Radio Transmitter T-282/GR

Name	Function
POWER ON-OFF	Turns power on and off
PLATE ON-OFF	Turns plate voltage on and off
MIKE	Jack to insert microphone plug
GAIN	Controls audio gain
NARROW-BROAD	Switches narrow band amplifier in or out
EMER-NORMAL	Switches connections on line input transformer
PUSH TO TALK-CARRIER ON	Switch to keep carrier on or to permit control with microphone switch
LIMITER THRESHOLD	Controls modulation limiting
BUCK-BOOST	Switch to increase or decrease voltage supplied to primary of all power transformers

Table 3-7. Controls of Modulator-Power Supply MD-141/GR

2.0 THEORY OF OPERATION

The individual circuits of the transmitter and modulator-power supply will now be considered in detail.

2.1 Oscillator-Tripler

Referring to Figure 3-5, crystal Y-601 in crystal oven A-601, together with the cathode and first and second grids of tube V-601 (6AH6), comprise a modified Pierce oscillator derived from a Colpitts oscillator. Note that the resonant circuit which represents the electrical characteristics of the crystal is shunted by capacitors C-601 and C-605 in series, forming the capacitive voltage divider, with the cathode connected to the common point, which is characteristic of the Colpitts oscillator. The relative values of C-601 and C-605 (which, in this case, are equal) control the amount of feedback used to sustain oscillations. C-602 serves as a blocking capacitor. Resistor R-603 is the screen dropping resistor, C-605 the screen bypass, and L601 an rf choke to keep radio frequencies out of the power supply. Resistor R-601 is the grid resistor of the oscillator, and resistor R-602 and capacitor C-603 comprise a grid circuit decoupling filter. When the

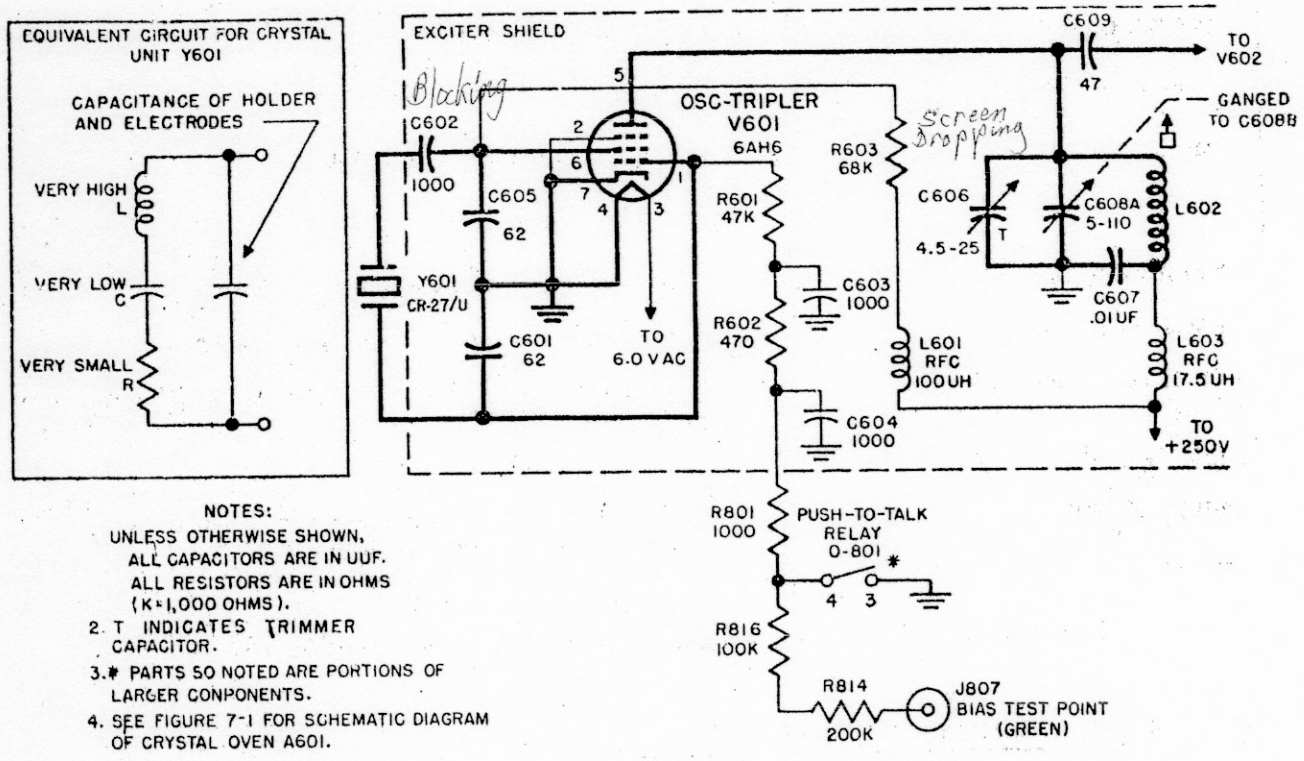

Figure 3-5. Radio Transmitter T-282/GR, Oscillator-Tripler, Simplified Schematic

transmitter is keyed on, the low side of R-602 is grounded through R-801 and relay 0-801. In this condition V-601 operates class C with grid leak bias. R-801 is the grid current meter shunt, and feed-through capacitor C-604 is the rf bypass. Grid No. 3 is at ground potental and hence serves as an electrostatic shield for the plate circuit of the tube which is therefore only electron coupled to the rest of the tube. The plate load coil L-602 is tuned by capacitors C-608A and C-606 to the third harmonic of the crystal frequency. Capacitor C-608A is ganged to capacitor C-608B. C-606 is a trimmer used to adjust tracking with the other circuits at the high frequency end of the band. Tracking at the low frequency end is adjusted by permeability tuning of L-602. The rf choke L-603 and capacitor C-607 are a plate decoupling network. Both grid No. 2 and the plate of V-601 receive their dc potentials from the plus 250-volts output of the low voltage supply.

2.2 First and Second Doublers

Referring to Figures 3-6 and 3-7, the first doubler (V-602) and the second doubler (V-603) are both class C rf amplifiers. R-605 in the first doubler and R-609 in the second doubler protects these tubes from high plate currents in the event of loss of excitation. The plate tank of the first doubler is comprised of L-604 and C-608B. High frequency tracking is accomplished by tuning C-612 and low frequency tracking is accomplished by permeability tuning L-604. This circuit is tuned to twice the input frequency (six times the crystal frequency). The plate and screen voltages of the first doubler are taken from the 250 volt low voltage power supply. Both the first and second doubler stages use a type 5763 tube.

In the grid circuit of the second doubler, R-608 and C-616 are used as a decoupling filter and R-802 is the meter shunt for the grid circuit. The plate tank of the second doubler is comprised of L-607 and C-621. C-621 is a split stator capacitor with its rotor grounded. The opposite ends of coil L-607 are therefore at equal but opposite polarities with respect to ground. C-622 serves to improve the symmetry of the entire circuit with respect to ground so that the coupling to the following push-pull stage is symmetrical and balanced. This plate tank is tuned to twice the input frequency (twelve times the crystal frequency). The plate and screen voltages of the second doubler are taken from the 250 volt low voltage power supply.

2.3 Buffer Amplifier

Referring to Figure 3-8, the buffer amplifier stage consists of the push-pull beam power amplifier tube V-604. This is an 832A tube operating as a class C amplifier. Each grid is capacitively coupled to the second doubler stage. Part of the bias for this stage is supplied from a voltage divider in the bias supply through decoupling filter R-612 and C-625.

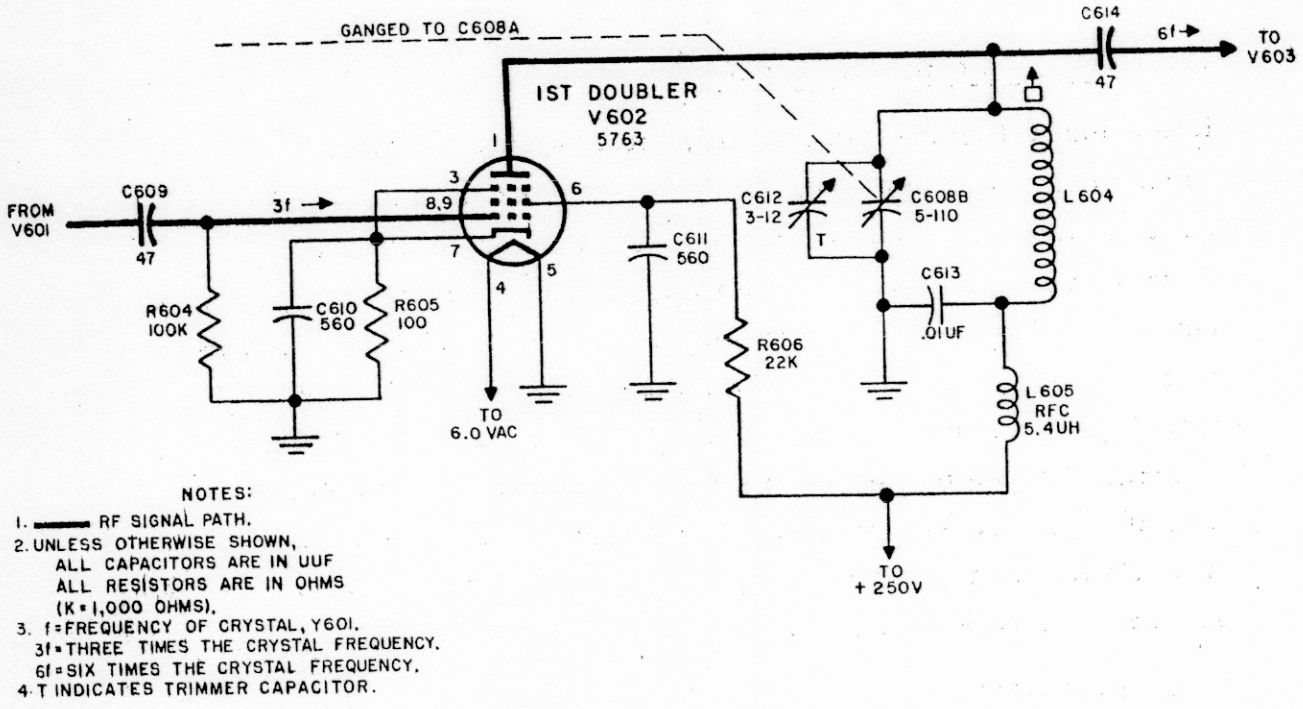

Figure 3-6. Radio Transmitter T-282/GR, First Doubler, Simplified Schematic

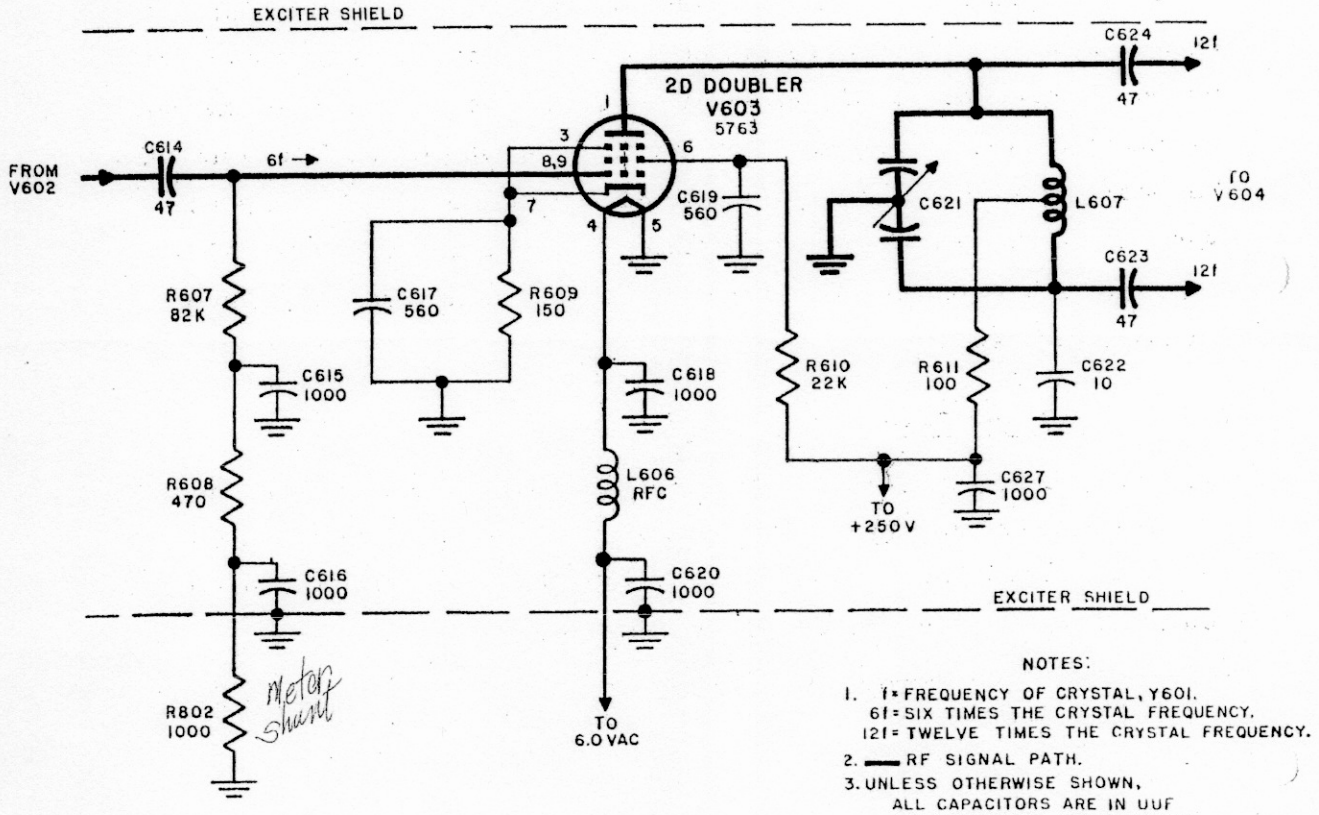

138/3
9/58

Figure 3-7. Radio Transmitter T-282/GR, Second Doubler, Simplified Schematic

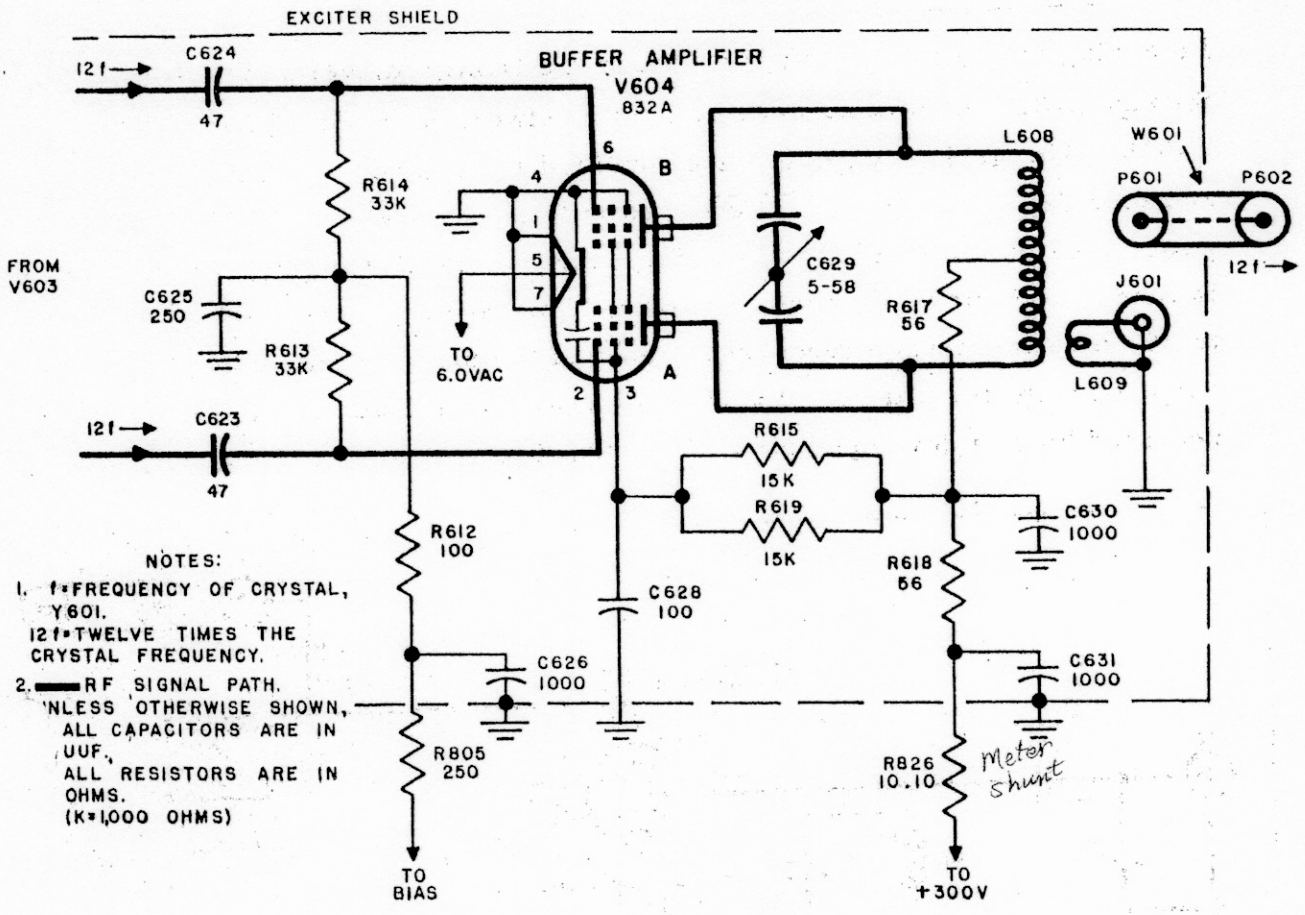

Figure 3-8. Radio Transmitter T-282/GR, Buffer Amplifier, Simplified Schematic

The remainder of its operating grid bias is provided by grid current flow through resistors R-613 and R-614. Resistor R-805 is the grid current meter shunt. Plate and screen voltages are supplied from the 300 volt output of the low voltage power supply. R-826 is the meter shunt for both the screen and plate currents. R-615 and R-619 connected in parallel make up the screen dropping resistor. C-628 is the screen bypass capacitor. L-608 and the split stator capacitor C-629 comprise the tank circuit for the output of this stage. This circuit is connected from plate to plate of the push-pull tube. The plate voltage is fed to the center tap of L-608 through resistor R-617. R-617 and C-630 comprises a decoupling filter. This stage is link coupled to the next stage through a coaxial cable.

2.4 Tripler-Driver

Referring to Figure 3-9, the rf input to the tripler-driver is introduced through J-901 to an impedance matching network made up of C-917 and C-926. The grid tank circuit is comprised L-902 and the stray wiring and tube capacitances. The tube used in this stage is a 4X150A beam power tube operated as a class C frequency tripler. The grid circuit is tuned to 12 times the crystal frequency and the plate circuit is tuned to 36 times the crystal frequency. Part of the bias for this stage is supplied from the minus 100 volt bias power supply and the balance of the required bias is developed by grid current flow through grid resistors

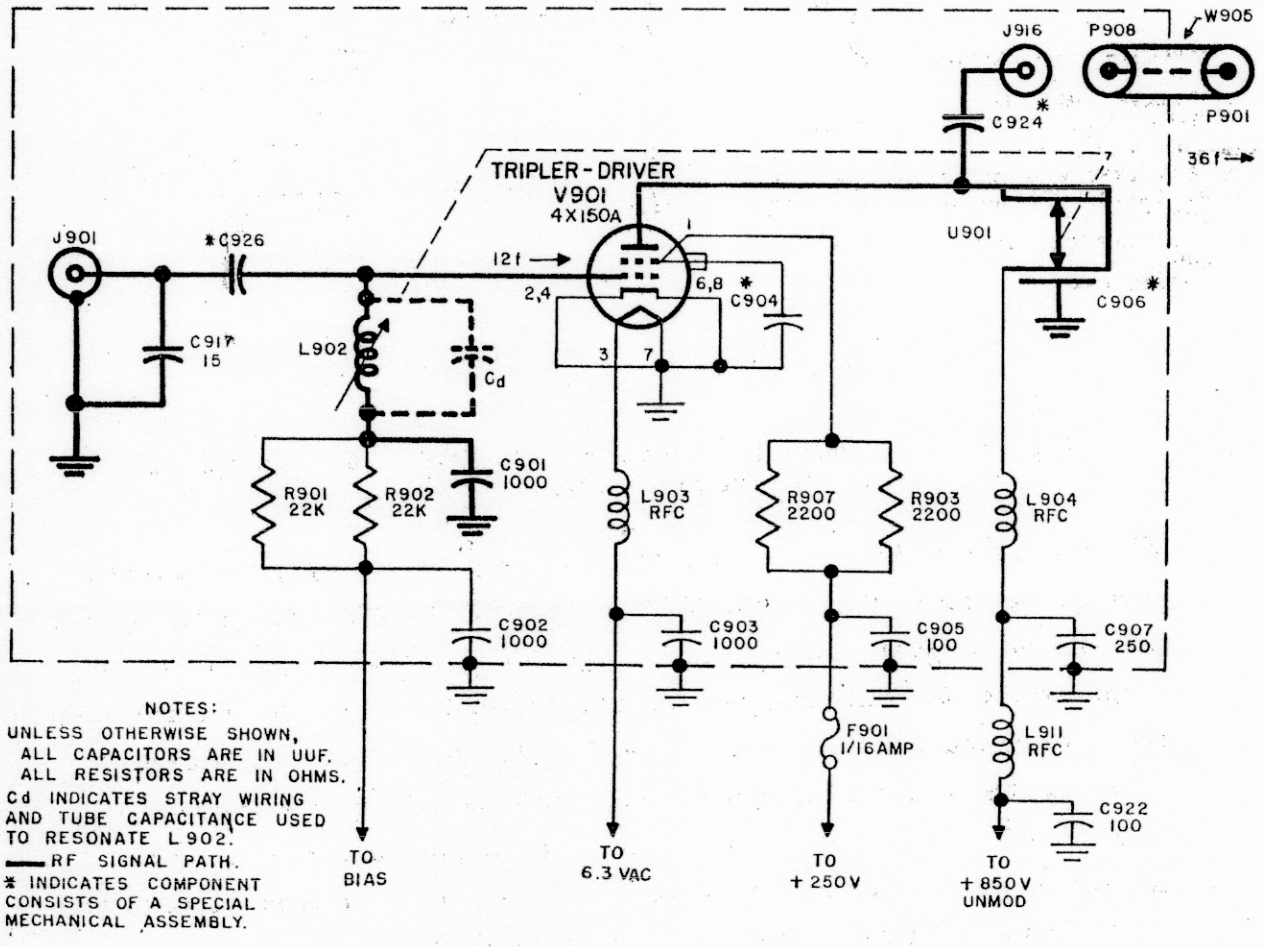

Figure 3-9. Radio Transmitter T-282/GR, Tripler-Driver, Simplified Schematic

R-901 and R-902. C-901 and C-902 function as rf bypass capacitors. The screen grid voltage is fed through R-903 and R-907 connected in parallel. C-905 is the screen bypass capacitor. The screen is protected by a 1/16 ampere fuse F-901. The plate circuit is a tuned stub type of circuit.

2.5 Tuned Stub Assemblies

At frequencies above 300 megacycles, the inductances and capacities that are used in conventional radio transmitters have values that are too large for these frequencies. Components built with the correct values would be too small to be practical and the efficiency would be low. To obtain good results at these frequencies a transmission line type of tank circuit is used.

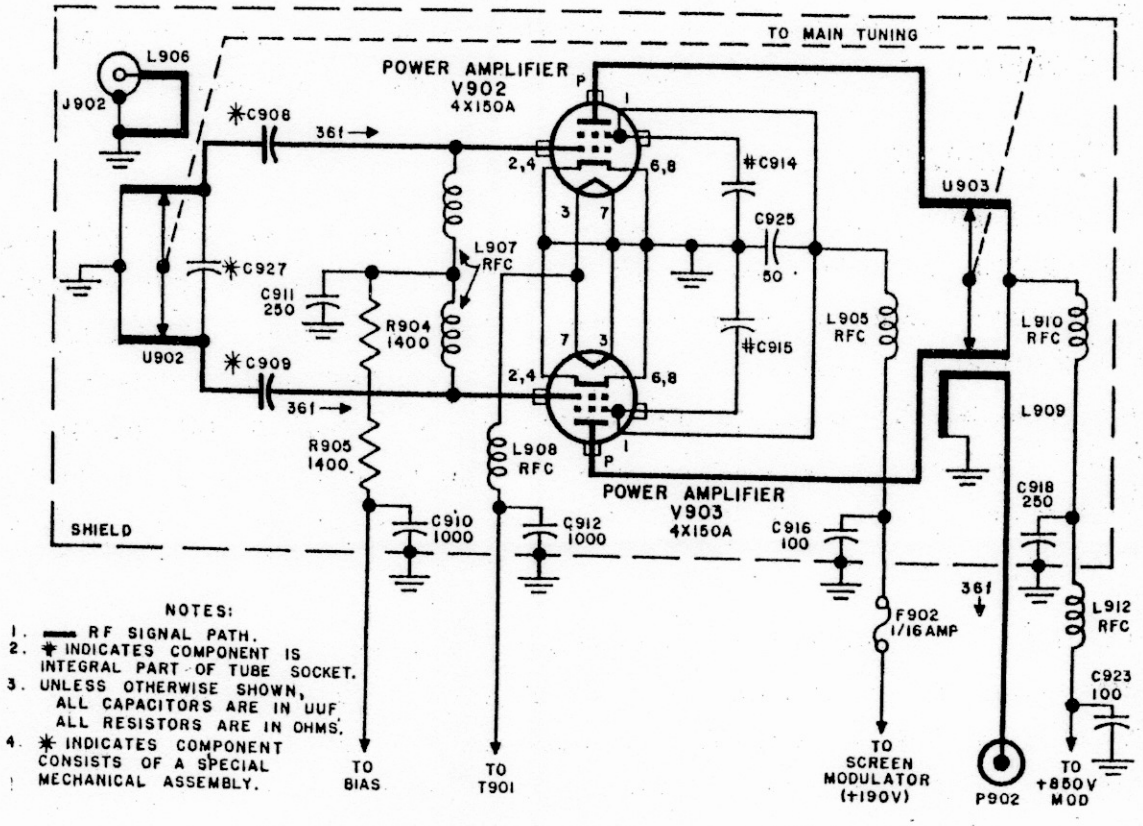

Figure 3-10. Radio Transmitter T-282/GR, Power Amplifier, Simplified Schematic

A quarter wavelength of transmission line that is shorted at one end will look like a high impedance at the open end. All of the capacity and inductance are distributed about the conductors of the line. These can be utilized as the grid or plate tank circuit of a stage. They have a very high Q and the efficiency is very good. All tank circuits operating at these frequencies use either a resonant line tank or a tuned cavity as the resonant element. In the T-282 Transmitter there are three such tuned line circuits. The plate of the driver and the grid and plate of the power amplifier are such circuits. The line is formed in the shape of the circumference of a circle. The frequency is changed by a shorting bar that will physically change the length of the line. The line being in the form of a circle can have its shorting bar rotated on a shaft and arm. As the shaft is rotated the shorting bar will slide around the line changing its length. Contact is made to the line by contact fingers mounted on the end of the arm which is rotated by the shaft. For an example of this type of construction see Figures 3-11 and 3-12.

2.6 Power Amplifier

Referring to Figure 3-10, the PA stage of this transmitter is a push-pull stage using 4X150A tubes. The grids are connected to the ends of a tuned line tank circuit through capacitors C-908 and C-909. These capacitors are made as a part of the final tube sockets. The grid tank is coupled to the previous stage by a special link coupling. RF current is fed through the rf transmission line from the driver and is caused to flow through the grid housing or case. This current sets up magnetic lines around the case which excite the grid tank. For the exact current and magnetic flow see Figure3-11.

Grid bias is fed to the grids through decoupling circuits made up of R-904 and R-905 connected in series and C-911. This bias is then fed to the grids through two rf chokes, L-907. The two cathodes are connected to ground. There are four separate cathode leads coming out of the 4X150A tube. All of these leads are connected to the ground to reduce the lead inductance. This will allow the cathode to be at exact ground potential. Modulated, plus 190 volts is brought in through a 1/16 amp fuse F-902. This voltage is fed

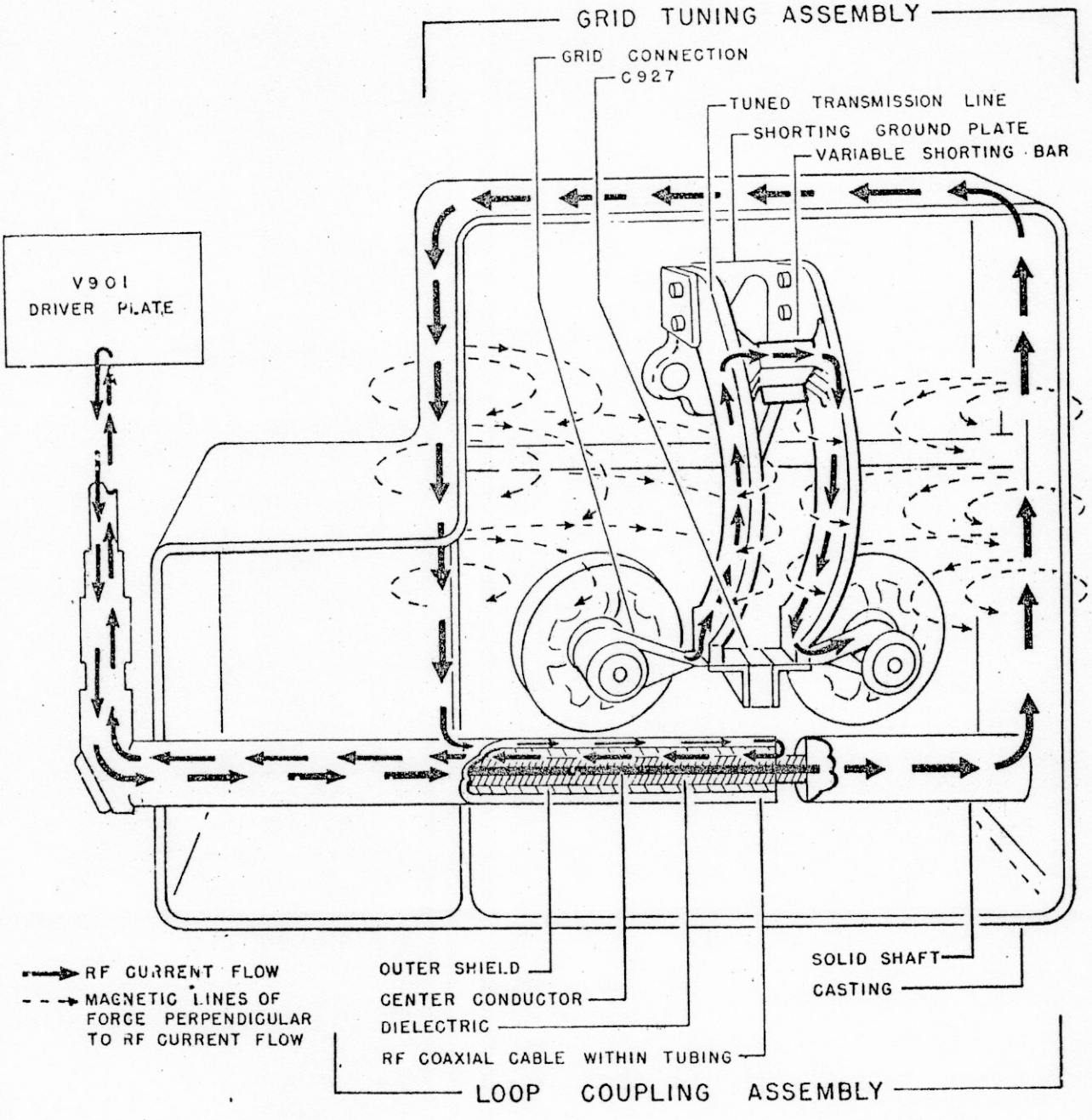

Figure 3-11. Radio Transmitter T-282/GR, Power Amplifier Input Circuit

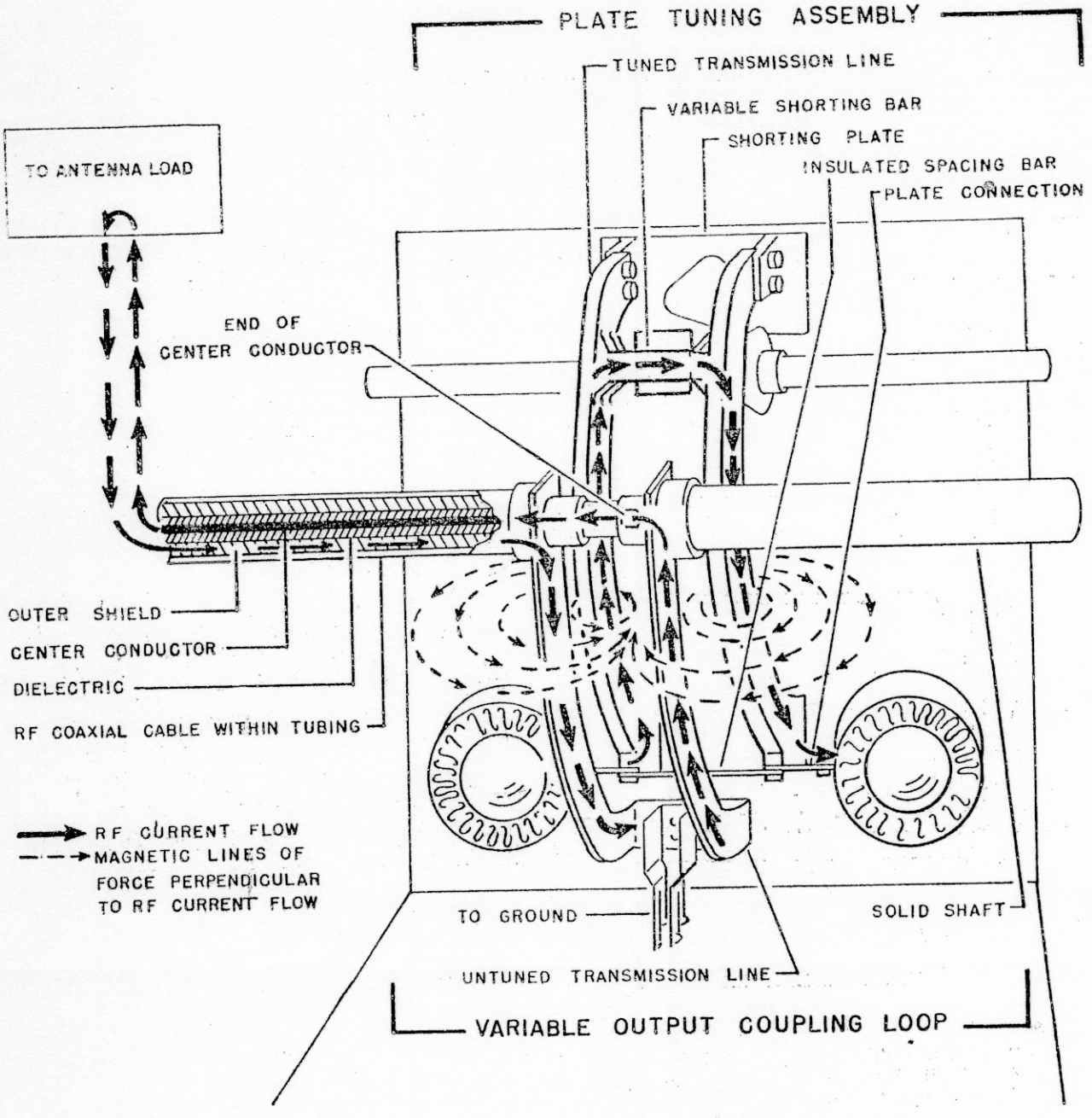

Figure 3-12. Radio Transmitter T-282/GR, Power Amplifier Output Circuit

through an rf choke L-905 and connected to the screen grids of the two tubes. Capacitors C-916 and C-925 are the rf bypass capacitors. These are part of the decoupling circuit between the "B" plus and the screens. Two capacitors C-914 and C-915 are built as a part of the PA tube sockets. These capacitors in series with the lead inductance in the screen circuit form a series resonant circuit from the tube screens to ground. This assures that the screens are at exact ground potential as far as the signal is concerned. The plate tank is a blanced line connected from plate to plate of the push-pull output tubes. As the rf current flows in the tank, magnetic lines of force are produced and they cut the turn of the coupling loop. This induces current in the loop, which is fed to the antenna output connector through the antenna relay, low-pass filter, and the directional coupler.

2.7 Screen Modulator

Referring to Figure 3-13, components of the screen modulator circuit are located in the monitor-screen modulator assembly. V-706, connected as a triode and used as a cathode follower, is the screen modulator tube. The plate is connected through three OB2 voltage regulator tubes that are connected in series to the plus 850 volt unmodulated power supply.

The dc bias to this tube is the difference between the voltage drop across the cathode resistor and the voltage drop across a portion of potentiometer R-719. This potentiometer is connected between the plus 250 volt power supply and ground. The tap is adjusted to obtain the correct grid bias on the tube. This bias determines the amount of plate current that will pass through the tube, which in turn determines the voltage across the cathode resistor. This voltage (approximately 190 volts) is applied as screen voltage to the power amplifier stage. Therefore, the potentiometer adjusts the screen voltage on the power amplifier stage. A portion of the audio voltage from the modulated high voltage is fed through capacitor

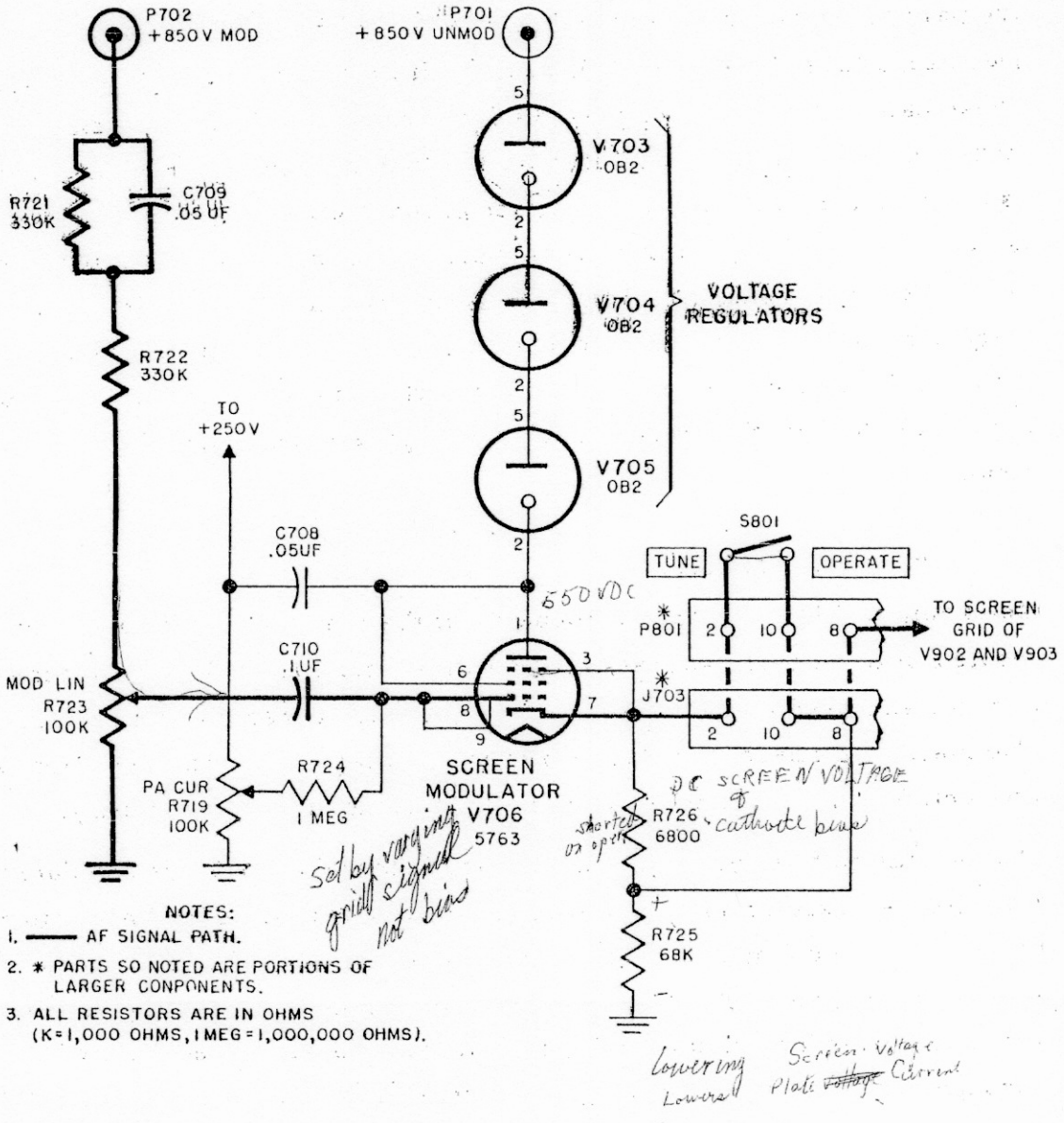

Figure 3-13. Radio Transmitter T-282/GR, Screen Modulator, Simplified Schematic

C-710 to the grid of the screen modulator tube. This audio voltage on the grid of the screen modulator tube causes the screen voltage on the power amplifier stage to vary at the audio rate. The amount of audio voltage that is fed to the grid of the screen modulator tube is adjusted by potentiometer R-723 so that the modulated output of the transmitter is linear. The tune-operate switch S-801 reduces the screen voltage on the power amplifier stage by inserting an additional resistor R-726 in the cathode circuit of the screen modulator tube. This resistor reduces the plate current of the screen modulator tube, which in turn will reduce the voltage drop across the cathode resistor R-725. Since the voltage drop across R-725 is the screen

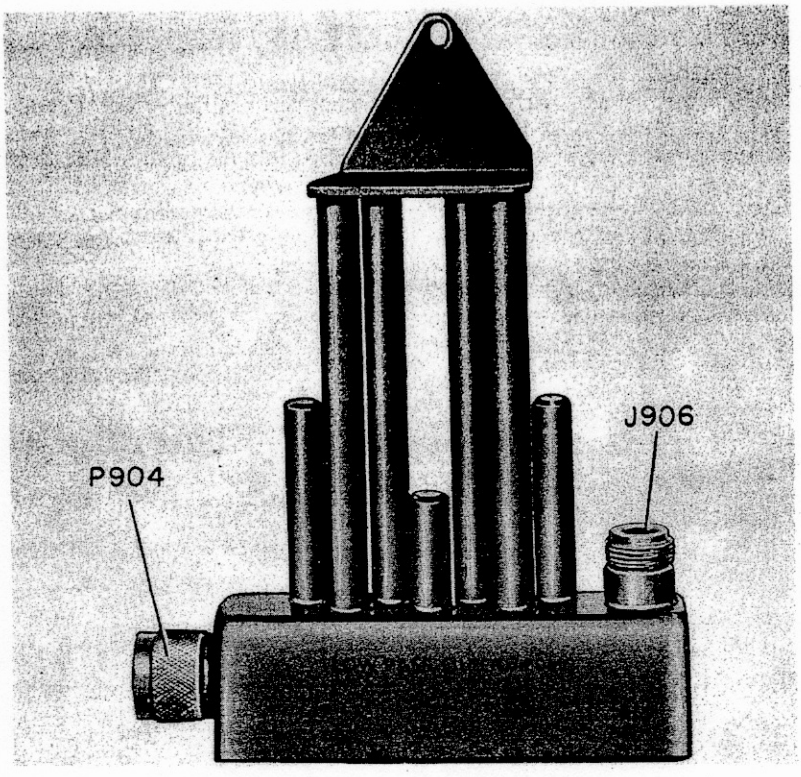

RF FILTER Z901

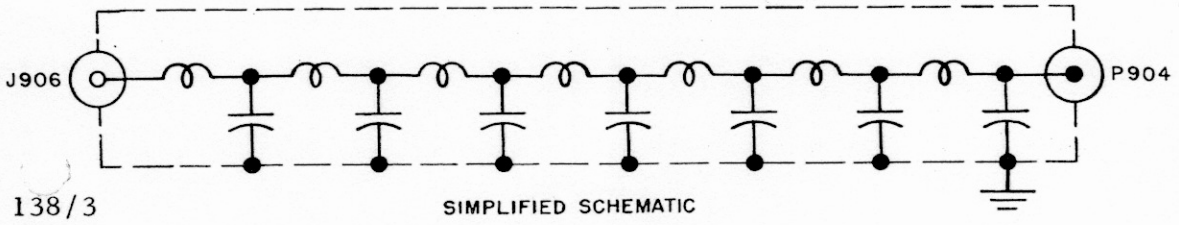

138/3
9/58

SIMPLIFIED SCHEMATIC

Figure 3-14. Radio Transmitter T-282/GR, R-F Filter

voltage for the power amplifier stage, this drop in screen voltage will reduce the power output of the transmitter.

2.8 RF Filter

Referring to Figure 3-14, the low-pass rf filter Z-901 is designed to minimize harmonic radiation from the transmitter. It consists of several sections of transmission line used as circuit elements. The approximate equivalent circuit is similar to that of a filter using lumped elements of inductance and capacitance. The filter is replaceable as an entire unit. The filter will attenuate all frequencies above approximately 420 mc.

2.9 Directional Coupler

Referring to Figure 3-15, the directional coupler consists of a short section of transmission line from which a sample of the transmitter power is obtained by a combination of inductive and capacitive coupling. The two

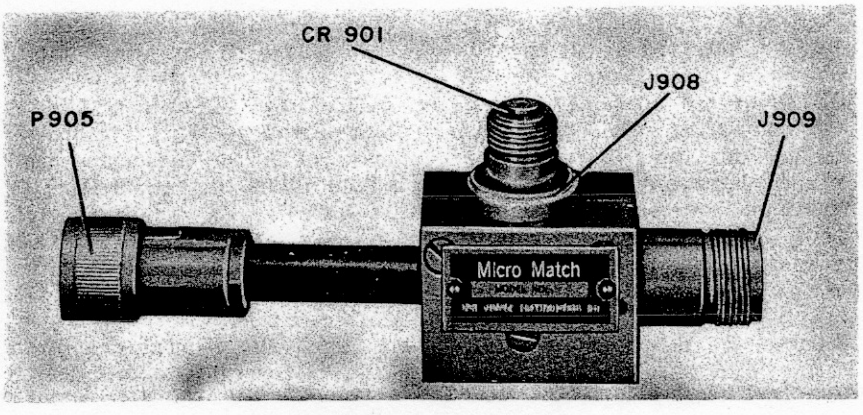

DIRECTIONAL COUPLER DC901

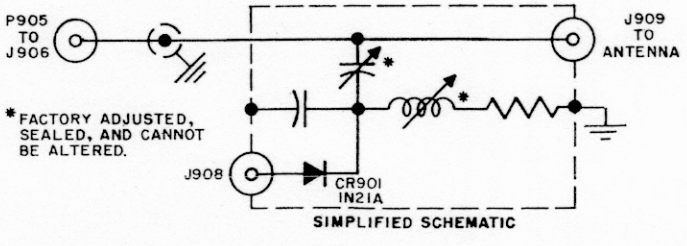

SIMPLIFIED SCHEMATIC

Figure 3-15. Radio Transmitter T-282/GR, Directional Coupler

components of coupling are additive in the forward direction (toward the antenna) and subtractive (cancel each other) in the reflected direction. The sample of power is rectified by crystal diode CR-901. With reasonably small standing wave ratios (less than 2 to 1), the resultant output from CR-901 is porportional to the power radiated by the antenna. This dc output, which varies at an audio rate (due to modulation), is conveyed to the input jack J-702 of the monitor-screen modulator section through a coaxial cable.

2.10 RF Power Measurement

Referring to Figure 3-16, rectified carrier output from the directional coupler DC-901 goes through connectors P-906 and J-702 to the rotor of "METER 2" Selector Switch S-701. When the switch is operated to the "CARRIER WATTS" position, "PWR CAL" resistor R-701, in series with "METER 2", serves as the meter multiplier and calabrator adjustment for the rf power measurements.

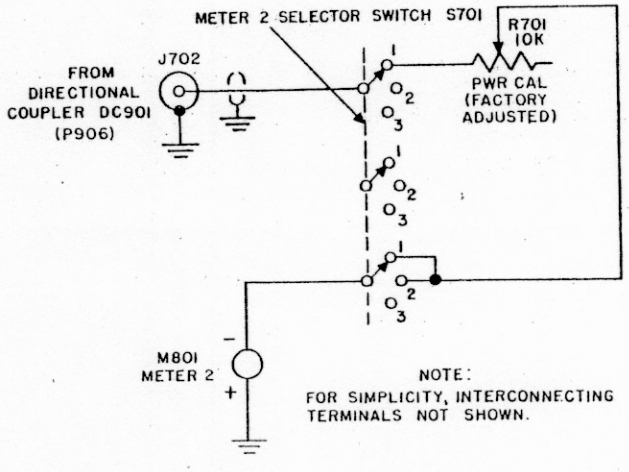

Figure 3-16. Radio Transmitter T-282/GR, R-F Power Measurement, Simplified Schematic

2.11 Percent of Modulation Measurement

Referring to Figure 3-17, before modulation measurements can be made, "METER 2" must be calabrated. "METER 2" Selector Switch is operated to the "SET CAL" position, completing a circuit from J-702 through "CALABRATE" variable resistor R-702, resistor R-703 and "METER 2" to ground. When "METER 2" Selector Switch S-701 is operated to the "% MOD" position, the audio frequency component of the input from the directional coupler is coupled from the "CALIBRATE" variable resistor R-702 through capacitor C-701 to the grid of the amplifier tube V-702A. This is one-half of a 12AX7 tube. Resistors R-703 and R-704 in series with "CALABRATE" resistor R-702 form a voltage divider to ground. R-707 is the grid resistor and R-709 is the plate load resistor. Cathode bias is provided by the lower part of "MOD CAL" variable resistor R-716 which is also part of an inverse feedback circuit from tube V-701B (1/2 12AT7). The output of tube V-702A is coupled by capacitor C-702 to the grid of amplifier V-701B. The grid resistor of this stage is R-711 and the plate load resistor is R-712. Bias is supplied to this stage by cathode resistor R-714. Part of the output of the stage is coupled from the plate of the tube through capacitor C-704 and dropping resistor R-715 to variable resistor R-716, thus providing inverse feedback to the cathode circuit of V-702A. The magnitude of the inverse feedback is so great that the overall gain of amplifiers V-701B and V-702A is very small. These stages receive their dc plate voltage from the 250-volt supply through a filter made up of resistor R-710 and capacitor C-703.

Capacitor C-705 couples the output of tube V-701B to tube V-702B which is connected as a diode and provides the rectified current measured by "METER 2", using R-717 as a meter multiplier resistor. When the modulation monitor is properly calabrated and the carrier is 100% modulated, this rectified current will cause the pointer of "METER 2" to deflect to the 100% mark. In the absence of any modulation, current still flows through diode connected V-702B. This zero-signal current is balanced out by bleeding some of the cathode current from V-701B through the "METER 2". These two currents are opposite and will cancel one another.

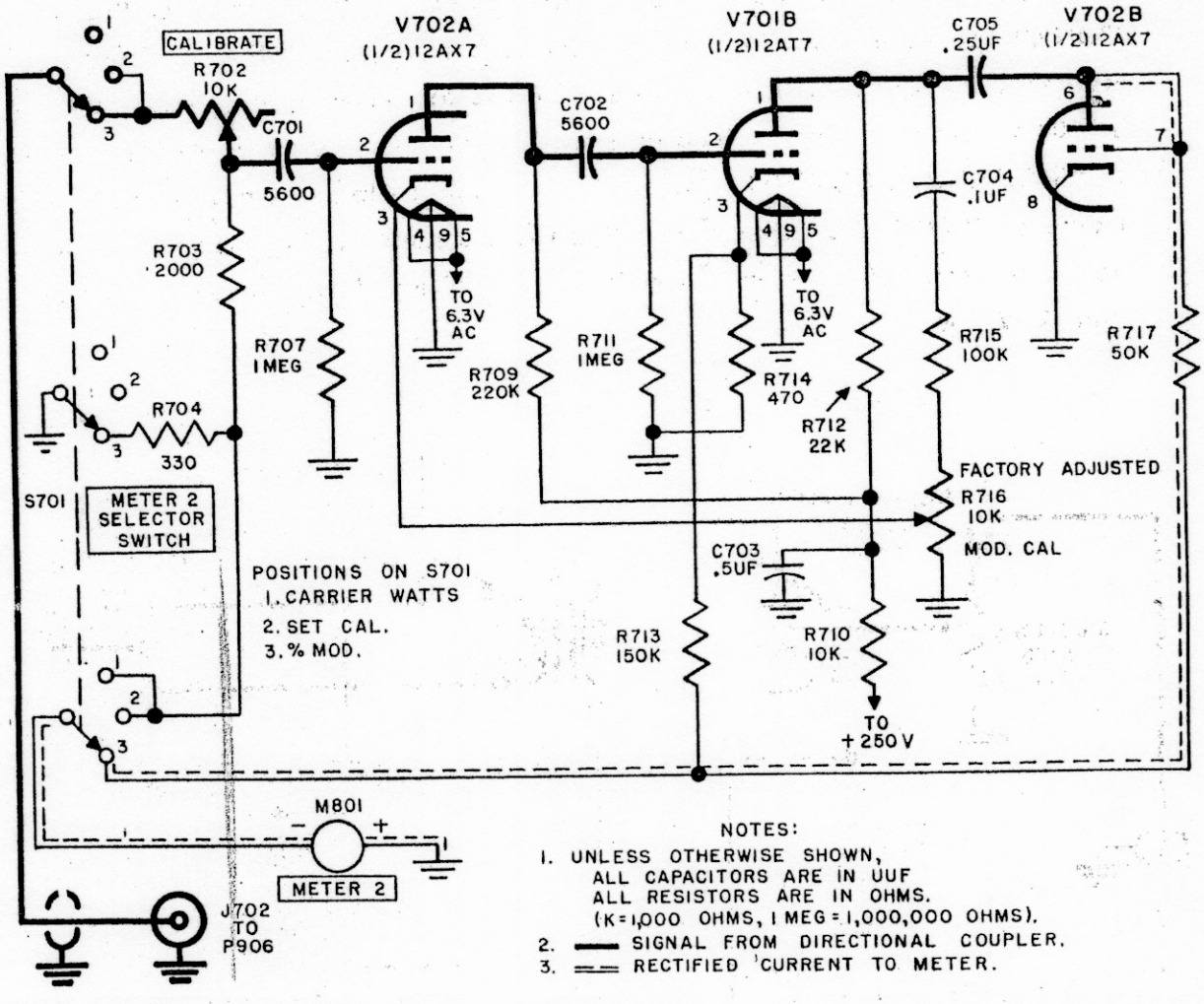

Figure 3-17. Radio Transmitter T-282/GR, Percent Modulation Measurement, Simplified Schematic

2.12 Aural Monitoring

Referring to Figure 3-18, the audio component of the input to the monitor circuit is coupled to the grid of amplifier tube V-701A, through "SIDE TONE" variable resistor R-705 which functions as a volume control. Resistor R-708 is for cathode bias and the primary winding of transformer T-701 is the plate load. The output from the secondary of T-701 is brought to "SIDE TONE OUTPUT" jack J-701 where headphones may be pluged in. Resistor R-803 and capacitor C-802 form a humbucking circuit which cancels out some of the power supply ripple voltage in the plate circuit of tube V-701A.

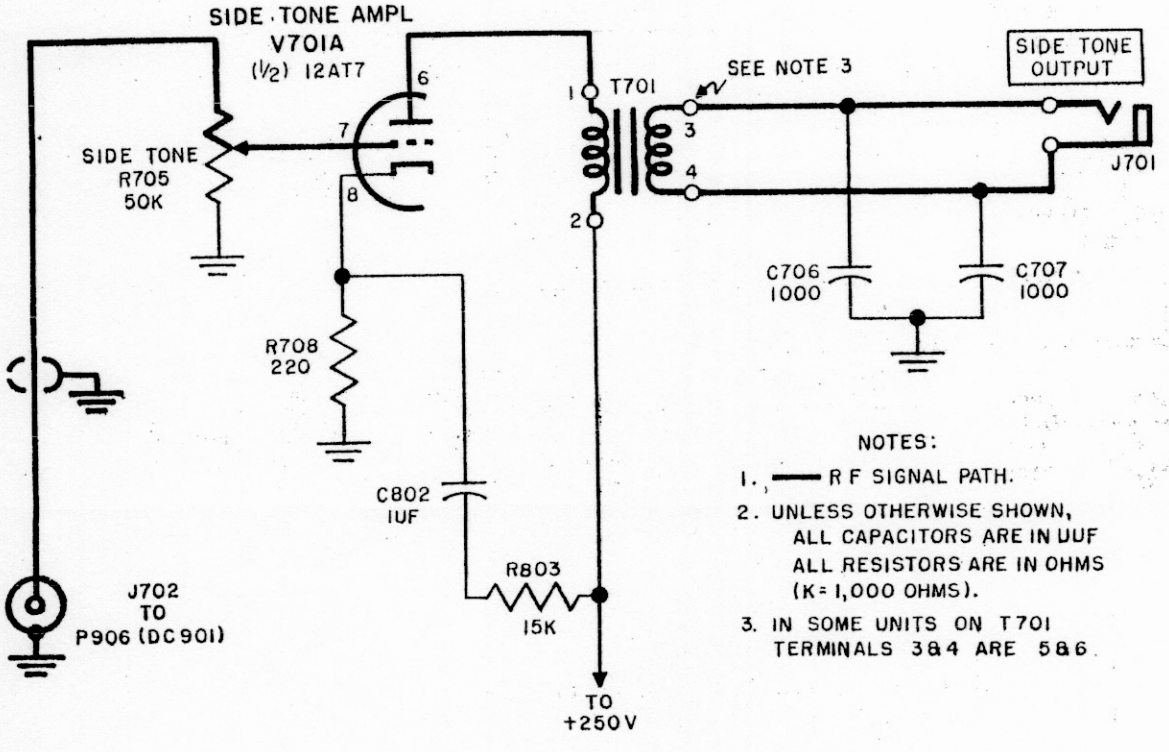

Figure 3-18. Radio Transmitter T-282/GR, Side Tone Output Circuit, Simplified Schematic

2.13 Metering Circuits

Referring to Figure 3-31, "METER 1" on the transmitter functions as a milliammeter and measures the grid and plate currents in most of the rf stages. These grid and plate currents are measured when "METER 1" Selector Switch S-802 is in positions 1 through 8. When the "METER 1" Selector Switch is in position 9, the terminals of "METER 1" are brought out through fuse F-801 to meter jacks on the front panel. These are J-809 and J-810. These two meter jacks may be connected by jumpers to other jacks for the purpose of making voltage measurements at certain test points.

2.14 Current Measurements

Meter shunt resistors are inserted in series with those circuits in which the dc current is to be measured. As the "METER SELECTOR SWITCH" is operated to each of the metering positions, "METER 1" is connected in parallel with the respective shunt resistor and the current divides between the meter shunt and the meter. The factor by which the indicated current must be multiplied is shown on each position of the "METER SELECTOR SWITCH". Meter multiplier resistor R-819, permits the shunt resistors to be a higher value.

2.15 Voltage Measurements

The voltage jacks are all color coded. The two jacks J-809 and J-810 which are connected to the meter are colored red and black. The red indicates the positive terminal of the meter and the black indicates the negative terminal of the meter. On the voltage jacks the red indicates that the jack is positive with respect to ground, green indicates that the jack is negative with respect to ground and black is the ground terminal.

The meter terminals may be connected to the voltage jacks with short jumpers after the cover plate is removed from the test jacks. This cover is marked "REMOVE TO EXPOSE TEST POINTS". To make voltage measurements, turn "METER SELECTOR SWITCH" to position 9. This will connect the meter

to the meter jacks. The multipliers for each position are connected in the circuit of each test jack. For each jack, the full scale value of the meter is indicated on the rear side of the test jack cover plate. Also, the average reading that should be obtained at each jack is shown on the rear side of the test jack cover plate.

2.16 Transmitter Mechanical System

For the following discussion, refer to Figure 3-19. All tuned circuits, within the transmitter, are tuned to resonance at the proper frequency by individual front panel controls. Most of the controls are ganged together in such a manner that each circuit is roughly tuned with a single front panel control.

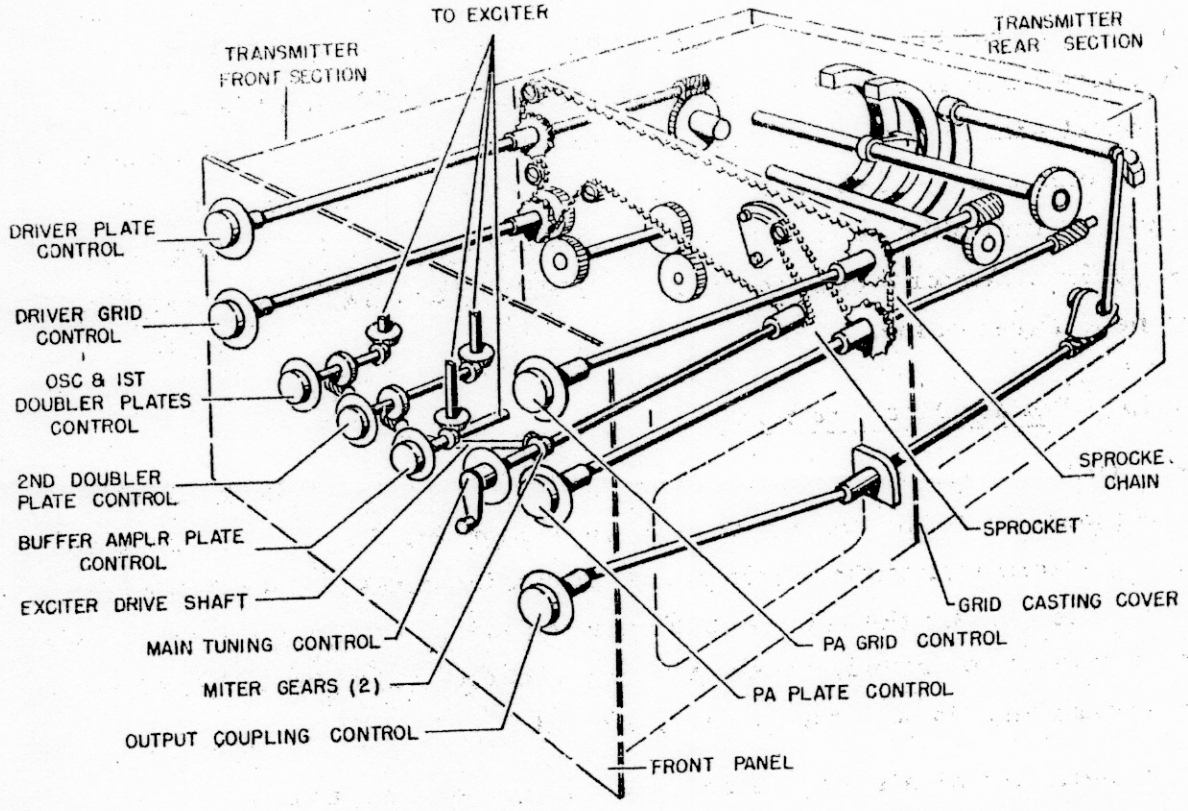

Figure 3-19. Radio Transmitter T-282/GR, Tuning Control Drive Mechanism

This eliminates the possibility of tuning individual circuits to an undesired harmonic, thus transmitting on the wrong frequency. The "MAIN TUNING" control is coupled to the exciter sub-assembly by miter gears and a shaft that is mounted parallel to the front panel. At the same time, the main shaft is coupled to the controls of the driver and final stages by a set of sprockets and a drive chain.

All transmitter front panel controls, except the "BUFFER AMPR PLATE" and "OUTPUT COUPLING" controls, are ganged together and coarse set with the "MAIN TUNING" control. As the "MAIN TUNING" control is rotated to obtain the desired operating frequency, pins on the exciter sub-assembly worm wheels, and pins on the chain sprockets, engage and drive stop collar pins on the individual tuning control shafts. When the desired setting is obtained, the "MAIN TUNING" control dial lock is then made finger tight. This prevents any of the individual tuning controls from urning the "MAIN TUNING" control. Fine tuning, by means of the individual front panel controls, is limited to 20% of the range of the "MAIN TUNING" control by stop collar pins on the individual tuning control shafts.

2.17 Audio Input Circuits

The audio section has provision for a 50 ohm or 600 ohm input impedance. The 50 ohm input impedance is for local operation using a T-17 or similar type carbon microphone; the 600 ohm input impedance is used for remote operation over a 600 ohm line.

Referring to Figure 3-30, the input transformer T-301 has two primaries, a low impedance microphone winding, terminals 1 and 2, and a 600 ohm split winding, terminals 3, 4, 5 and 6. The secondary of the transformer is connected to the dual potentiometer R-306 and resistor R-308. This network presents a constant 50,000 ohm load to the input transformer T-301 and also serves as a gain control for the modulator unit.

2.18 Narrow Band Amplifier

Referring to Figure 3-20, the output of the gain control R-306 is fed through two paths. The first path is to the input to the narrow band amplifier and the second path is to a switch which will bypass the narrow band amplifier.

The audio signal is fed through capacitors C-315 and C-305 to the grid of V-301. This is a type 6C4 tube which is used as a narrow band amplifier. The cathode and the grid of this stage are operated at a minus 100 volts and the plate is operated at ground potential. Band pass filter Z-301 shunted at the input by R-309 and at the output by R-310 and R-311 form the output load to the tube. This filter will pass only frequencies between 400 and 3000 cycles. Resistors R-310 and R-311 form a voltage divider across the output of the filter such that the gain of this stage is unity.

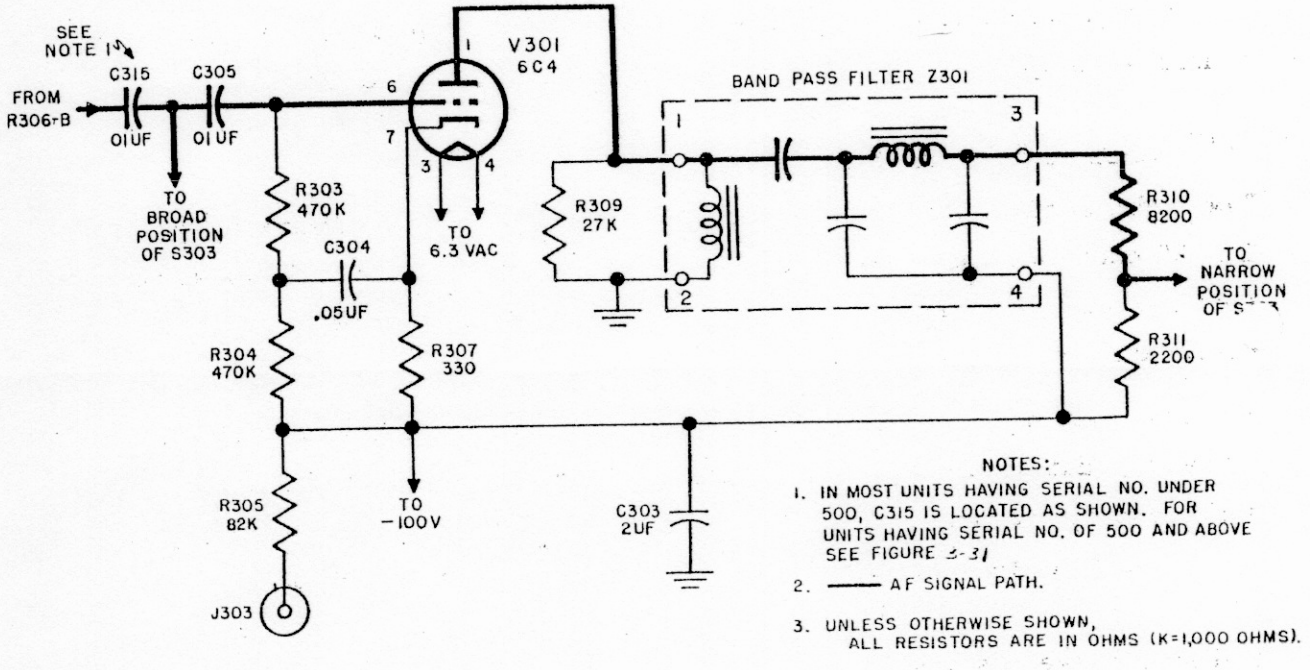

Figure 3-20. Modulator-Power Supply MD-141/GR, Narrow Band Amplifier, Simplified Schematic

This output feeds one side of the "NARROW-BROAD" switch. A tap between capacitors C-315 and C-305 provides the input to the other side of the "NARROW-BROAD" switch. While this switch is in the broad position the narrow band amplifier is bypassed from the circuit.

2.19 Phase Inverter

Referring to Figure 3-21, the purpose of this stage is to convert from single ended to push-pull output in order to drive the following push-pull stage. The audio input to V-302A is fed from the gain control R-306 when the "NARROW-BROAD" switch is in the BROAD position and is fed from the narrow band amplifier when the switch is in the NARROW position. This stage amplifies the signal and drives the grid of V-303. A small portion

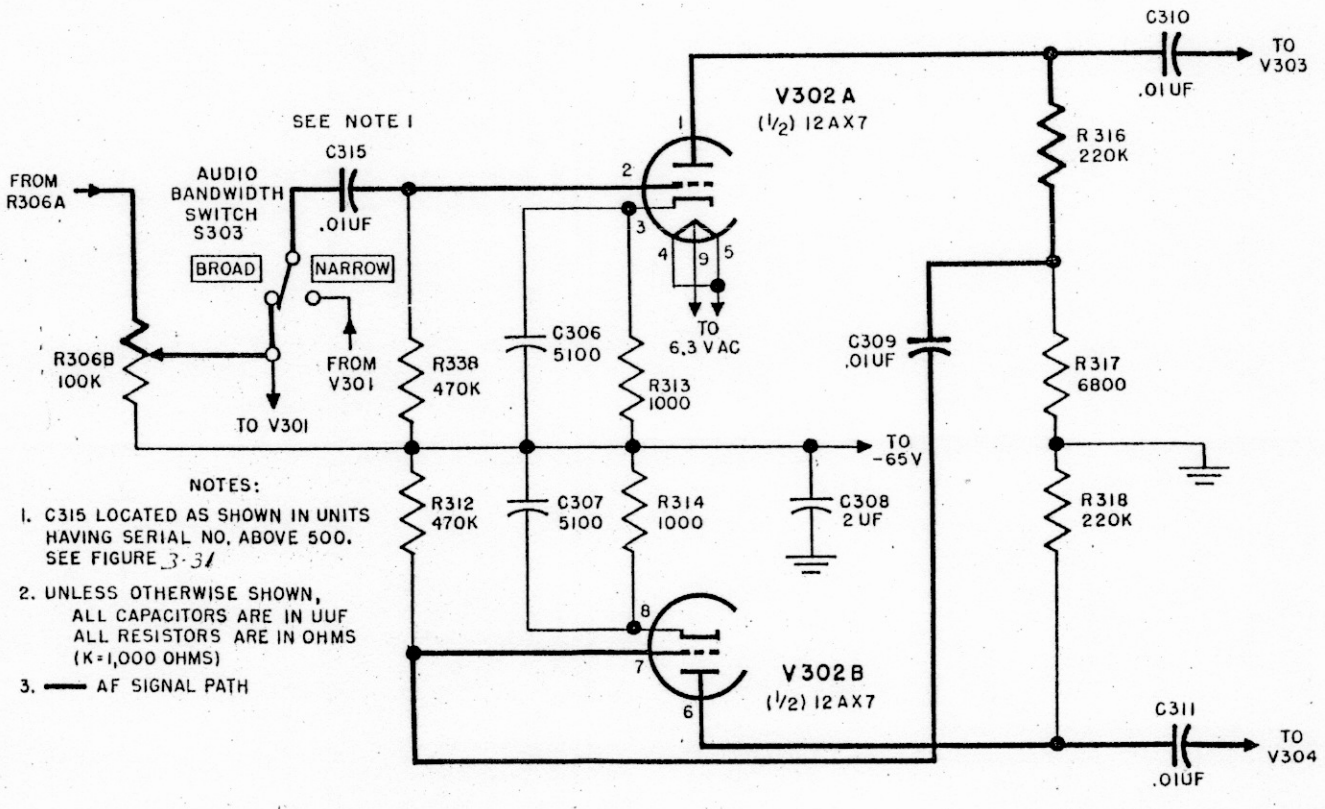

Figure 3-21. Modulator-Power Supply MD-141/GR, Phase Inverter, Simplified Schematic

of the signal from the plate of V-302A is fed back to the grid of V-302B. The grid and plate of V-302A are 180 degrees out of phase therefore the grids of V-302A and V-302B are 180 degrees out of phase. V-302B amplifies the out of phase signal and drives the grid of V-304. In this manner the two grids of V-303 and V-304 are driven 180 degrees out of phase. The cathodes and grids of this stage are operated at a minus 65 volts and the plates are operated at ground potential.

2.20 AF Amplifier

Referring to Figure 3-22, this stage is a conventional push-pull amplifier stage. The input is capacity coupled from the phase inverter stage. Two type 6BA6 tubes designated as V-303 and V-304 are used in this stage. R-319 and R-320 are the grid resistors and the common resistor R-206 is the ground return. There is a negative voltage applied across this common resistor which provides automatic limiting of the modulation and is discussed in paragraph 2.23.

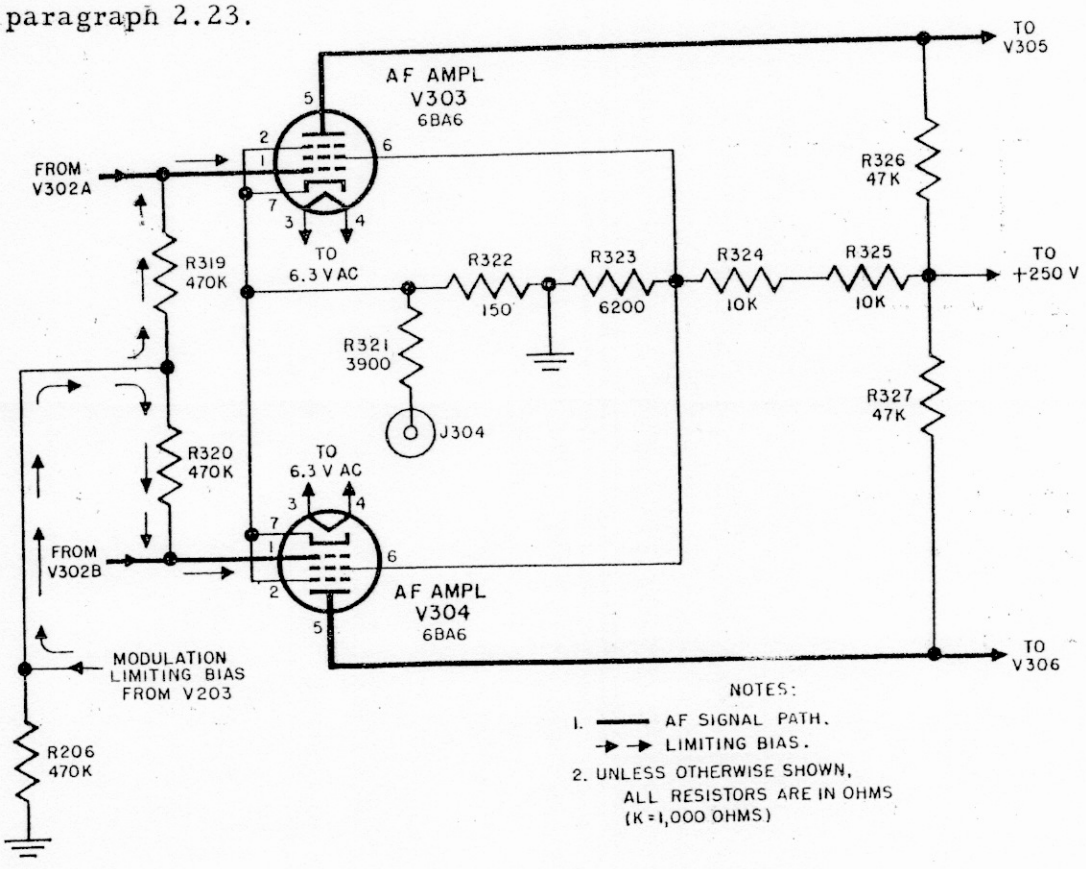

138/3
9/58 Figure 3-22. Modulator-Power Supply MD-141/GR, A-F amplifier, Simplified Schematic

2.21 Modulator Driver Stage

Referring to Figure 3-23, the modulator dirver stage is a push-pull stage with negative or inverse feedback. The input is capacity coupled from the previous stage. C-312 and C-313 are the coupling capacitors and R-329 and R-331 are the grid resistors. The two cathodes are tied together and the common cathode resistor R-330 furnishes all of the bias for the stage. The output is transformer coupled to the modulator stage. The plate voltage for the previous stage is fed from the plates of this stage through resistors R-328 and R-332. This forms the feedback loop for the modulator driver stage.

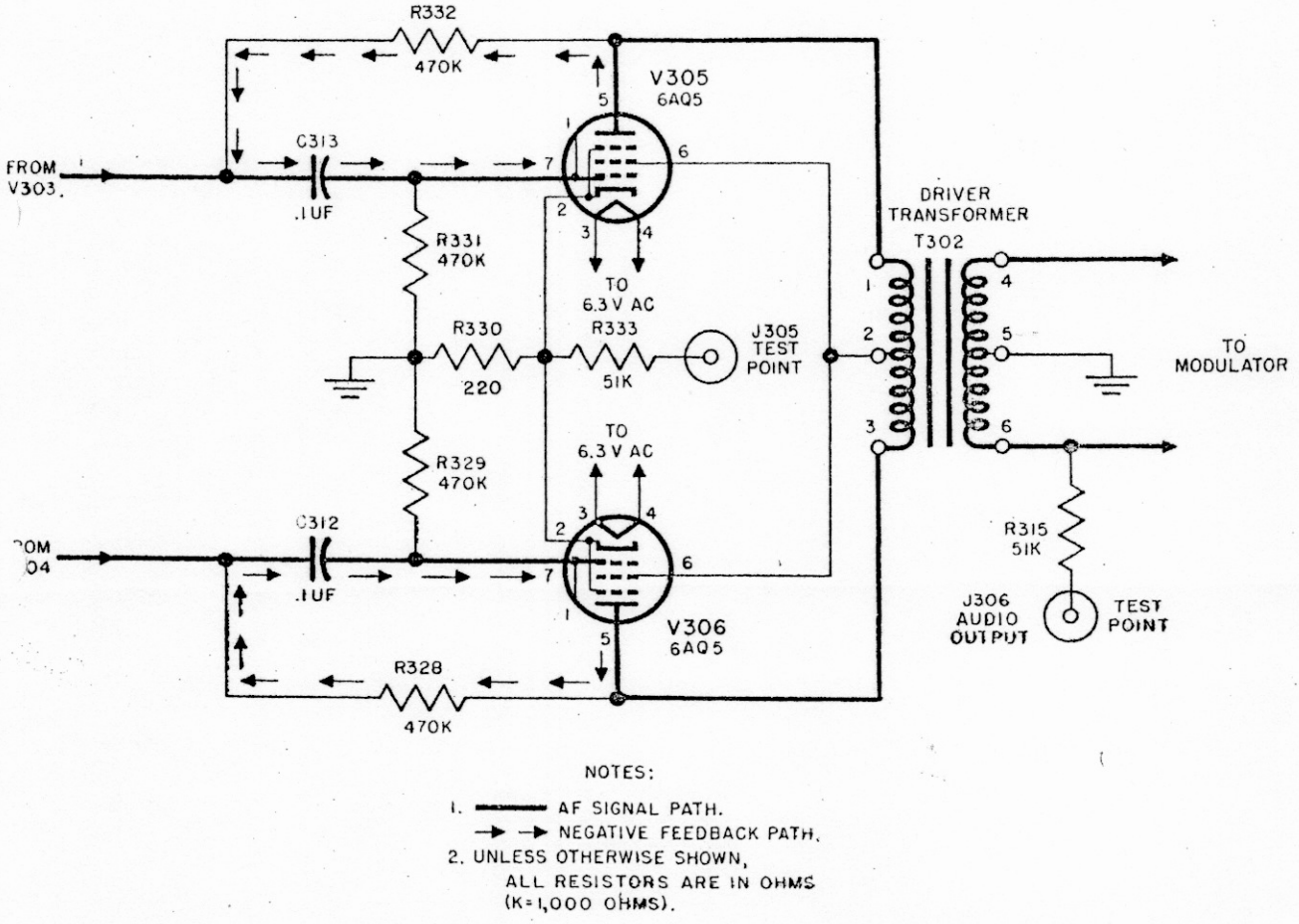

Figure 3-23. Modulator-Power Supply MD-141/GR, Modulator Driver, Simplified Schematic

2.22 Modulator Stage

Referring to Figure 3-24, the audio signal is coupled to this stage by inter-stage transformer T-302. The signal is fed to the grids of the two type 811 tubes used in this stage. These tubes, V-201 and V-202, are operated as a zero-bias class B audio stage. Each end of the primary of the modulation transformer T-201 is connected to one of the two plates and the center tap is connected to the "B" plus for the stage. There is a gap connected across the primary of the modulation transformer to protect the transformer from excessive audio voltages.

The secondary of the modulation transformer is made up of two windings. One winding is connected in series with the high voltage to the power amplifier stage in the transmitter. This provides the high level modulation for the transmitter. The second winding is used in conjunction with the "AUTOMATIC MODULATION LIMITER". The two ends of this winding are connected to the two plates of the limiter rectifier. The center tap of the winding is connected to the control voltage for the limiter. For the operation of this stage see paragraph 2.23.

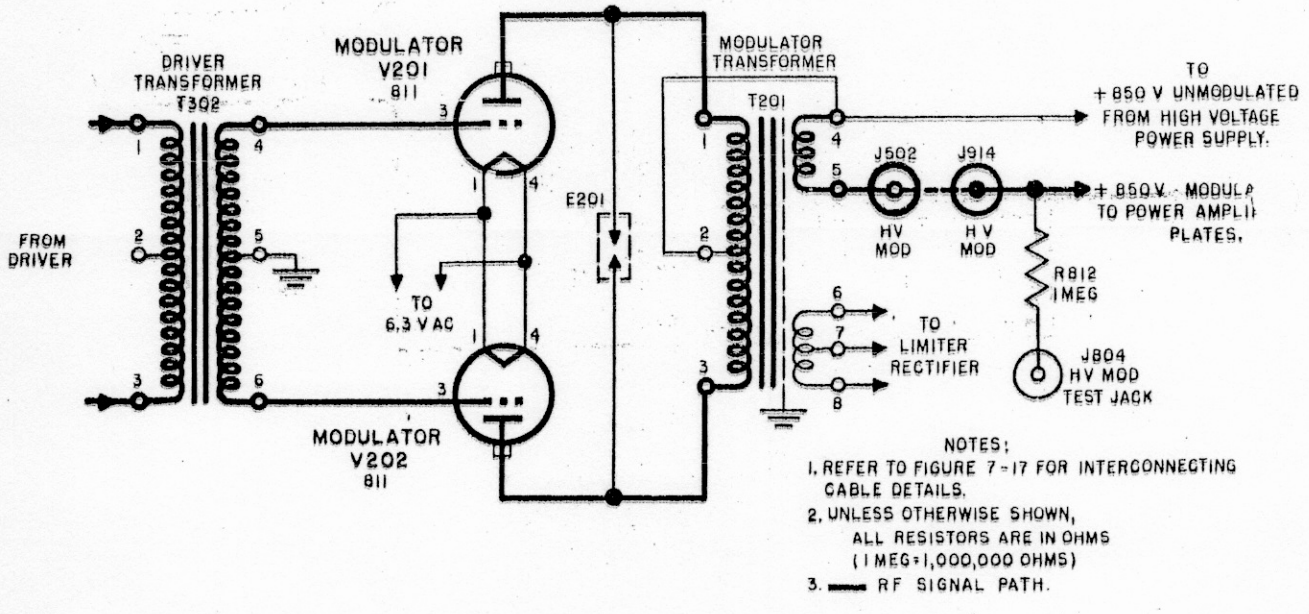

Figure 3-24. Modulator-Power Supply MD-141/GR, Modulator, Simplified Schematic

2.23 Automatic Modulation Limiter

Referring to Figure 3-25, the second output winding of the modulation transformer T-201 is brought out to terminals 6, 7 and 8 on the transformer case. This winding is connected such that the center tap is connected to a variable source of "B" plus voltage. The plus 250 volt supply is fed through a voltage divider to ground. This divider is comprised of resistors R-334 and R-336 with a variable resistor R-335 between them. The variable resistor is the limiter threshold control.

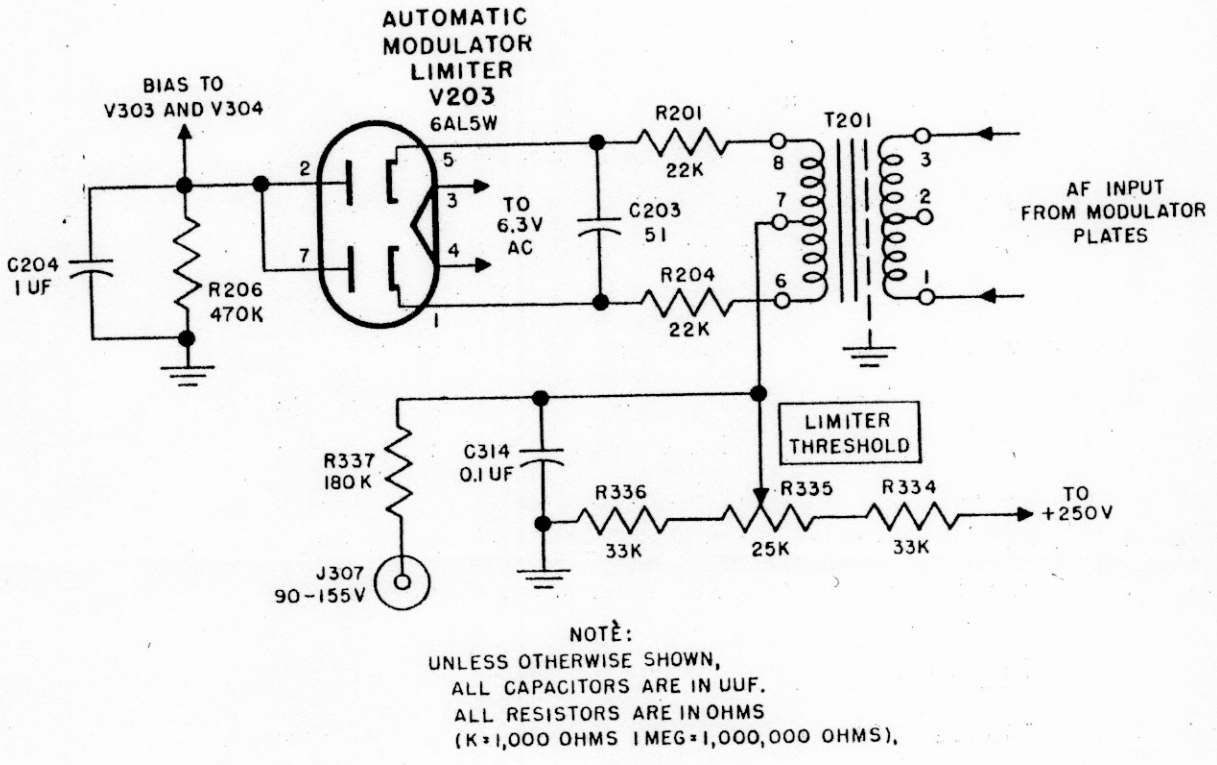

Figure 3-25. Modulator-Power Supply MD-141/GR, Automatic Modulation Limiter, Simplified Schematic

This control will set the dc voltage level appearing at the cathodes of the limiter tube V-203. This is a type 6AL5 tube. The voltage that will appear at the cathodes of the limiter tube will be the resultant of the dc voltage and the audio signal voltage induced in the secondary winding of the transformer. When the negative peaks of audio exceed the dc voltage, the cathode that is on the negative peak will be negative with respect to the plate of the tube. When this condition exists the tube will conduct and the plate will be driven in a negative direction. As the audio level increases there will be a greater negative voltage developed on the plates of the limiter tube. This negative voltage will bias the grids of the modulator AF amplifier and reduce the gain of the amplifier. This is a delayed automatic gain control actuated by the audio level of the modulator.

2.24 Power Input Circuit

Referring to Figure 3-30, the MD-141/GR modulator-power supply operates from either 115 volts or 230 volts. In either case the input power enters the modulator-power supply case at the power plug on the back. This plug is labeled J-504. The power is fed through an RF line filter composed of L-501, L-502, C-504 and C-505. From this RF filter the power goes through the off-on power switch S-403. After the power switch there is a jumper that may be connected in one of two positions. One way the jumper will connect the set for 115 volt operation and the other way it will connect the set for 230 volt operation. Depending on the line voltage to be used, fuse F-201 or F-202 will be in the circuit. These two inputs feed an autotransformer T-202 that will deliver the proper voltage to the power supplies.

2.25 115/230 Volt Operation

Referring to Figure 3-26, there are two windings on the autotransformer T-202. One winding is conventional autotransformer winding. The three leads from this winding are labeled 1, 2 and 3. When the line voltage is 230 volts the input power is fed to terminals 1 and 3. These are the ends of the winding. When the line voltage is 115 volts the input power is fed to terminals 1 and 2. This is one half of the winding. All operation of

the transmitter is at the 115 volt level. When the line voltage is 230 volts the autotransformer steps the voltage down to 115 volts. When the line voltage is 115 volts the input to the autotransformer is the same as the output. To provide a correction for the input line voltage, there is a "BUCK-BOOST" switch on the back of the modulator unit. The second winding on the autotransformer is a 5 volt winding. This winding is connected to the "BUCK-BOOST" switch which acts as a reversing switch for the 5 volt winding which is in series with the autotransformer winding. When the 5 volt winding is aiding the output of the autotransformer the "BUCK-BOOST" switch will be in the boost position and when the 5 volt winding is opposing the output of the autotransformer the "BUCK-BOOST" switch will be in the buck position. This adjustment will allow for a correction of 5 volts increase or decrease in the line voltage that is applied to the set.

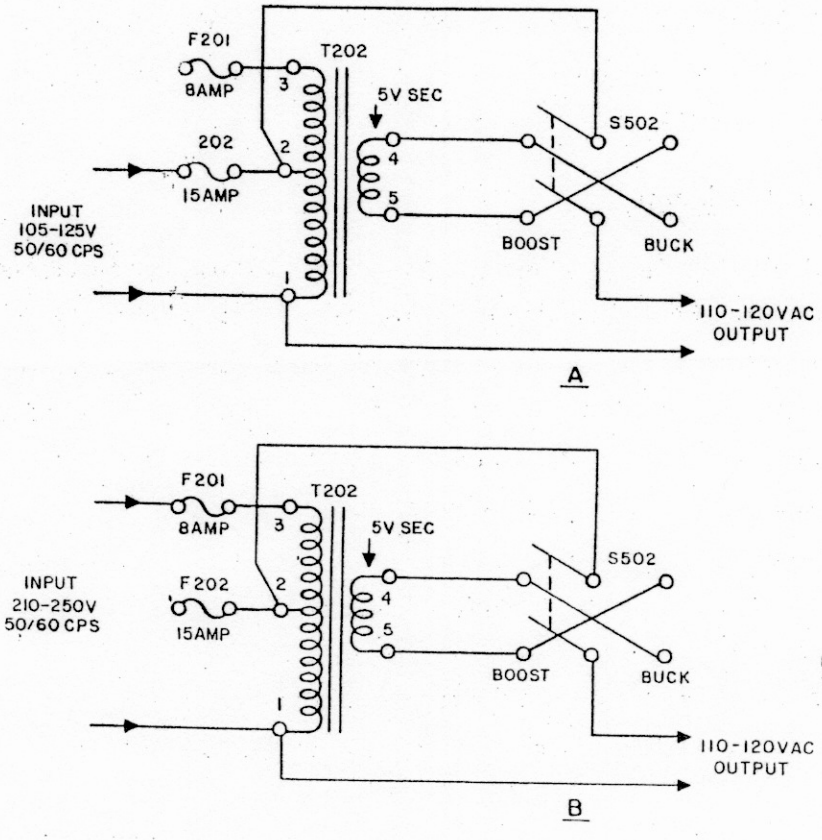

138/3
9/58

Figure 3-26. Modulator-Power Supply MD-141/GR, Line Adjustment Circuit, Simplified Schematic

2.26 Bias Supply

The adjusted output voltage from transformer T-202 is used to feed all of the other power supplies in the transmitter. The primary circuits to the bias supply are shown in Figure 3-27. In the modulator unit the front access door interlock and the air interlock are in series with the primary power. In the transmitter, the air filter interlock, the monitor-screen modulator interlock and the air interlock are all in series with this circuit. With all of the interlocks closed the power is connected to the power input circuit of the bias supply. Fuse F-104 is in series with this circuit. All of the negative bias voltages used in the transmitter are developed in this power supply. These voltages range from a -100 volts to a -35 volts.

2.27 Low Voltage DC Supply

The adjusted primary power to the low voltage DC supply goes through the contacts of the plate relay to the primary of the power transformer in the low voltage supply. The other side of this primary winding is connected to the common power lead from the main switch. Fuse F-103 is in series with this circuit. For a simplified circuit diagram see Figure 3-28. The output of this power supply is +300 volts and +250 volts.

2.28 High Voltage DC Supply

The adjusted output of the supply power is fed to the high voltage transformer which is in parallel with the low voltage transformer primary. The diagrar of this circuit is shown in Figure 3-29. The output of the supply is fed to the transmitter direct and also to the secondary of the modulation transformer. This provides both a modulated and an unmodulated high voltage to the transmitter. The unmodulated high voltage also feeds the plates of the modulator stage. The unmodulated voltage to the transmitter is fed to the driver plate and to the plate circuit of the screen modulator tube V-706. The modulated high voltage is fed to the plates of the final stage and also to the grid of the screen modulator tube. Only the audio portion of this voltage is used to drive the grid. The output of the high voltage DC supply is 850 volts.

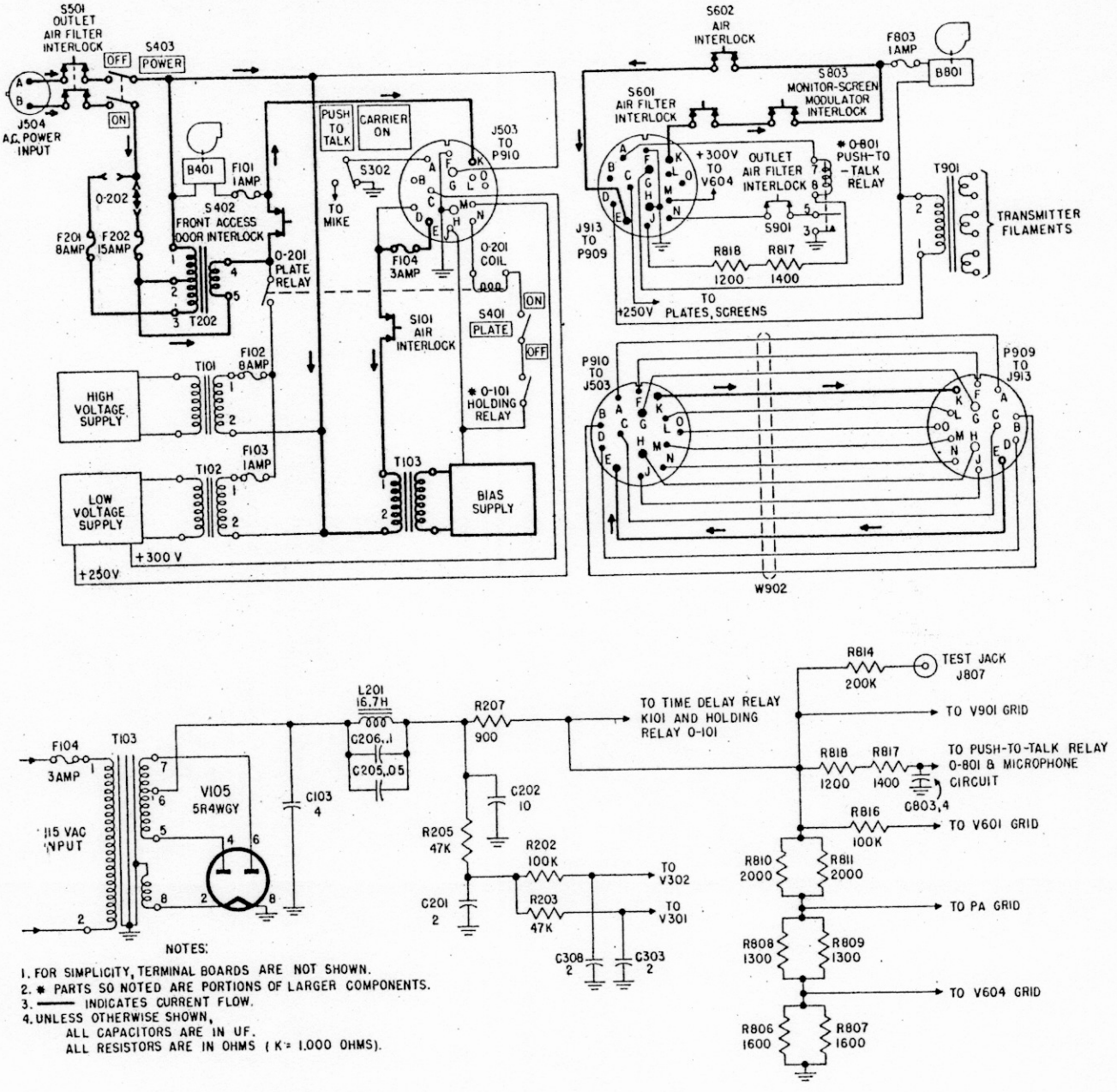

NOTES:
1. FOR SIMPLICITY, TERMINAL BOARDS ARE NOT SHOWN.
2. * PARTS SO NOTED ARE PORTIONS OF LARGER COMPONENTS.
3. —— INDICATES CURRENT FLOW.
4. UNLESS OTHERWISE SHOWN,
   ALL CAPACITORS ARE IN UF.
   ALL RESISTORS ARE IN OHMS (K = 1,000 OHMS).

Figure 3-27. Bias Supply, Simplified Schematic

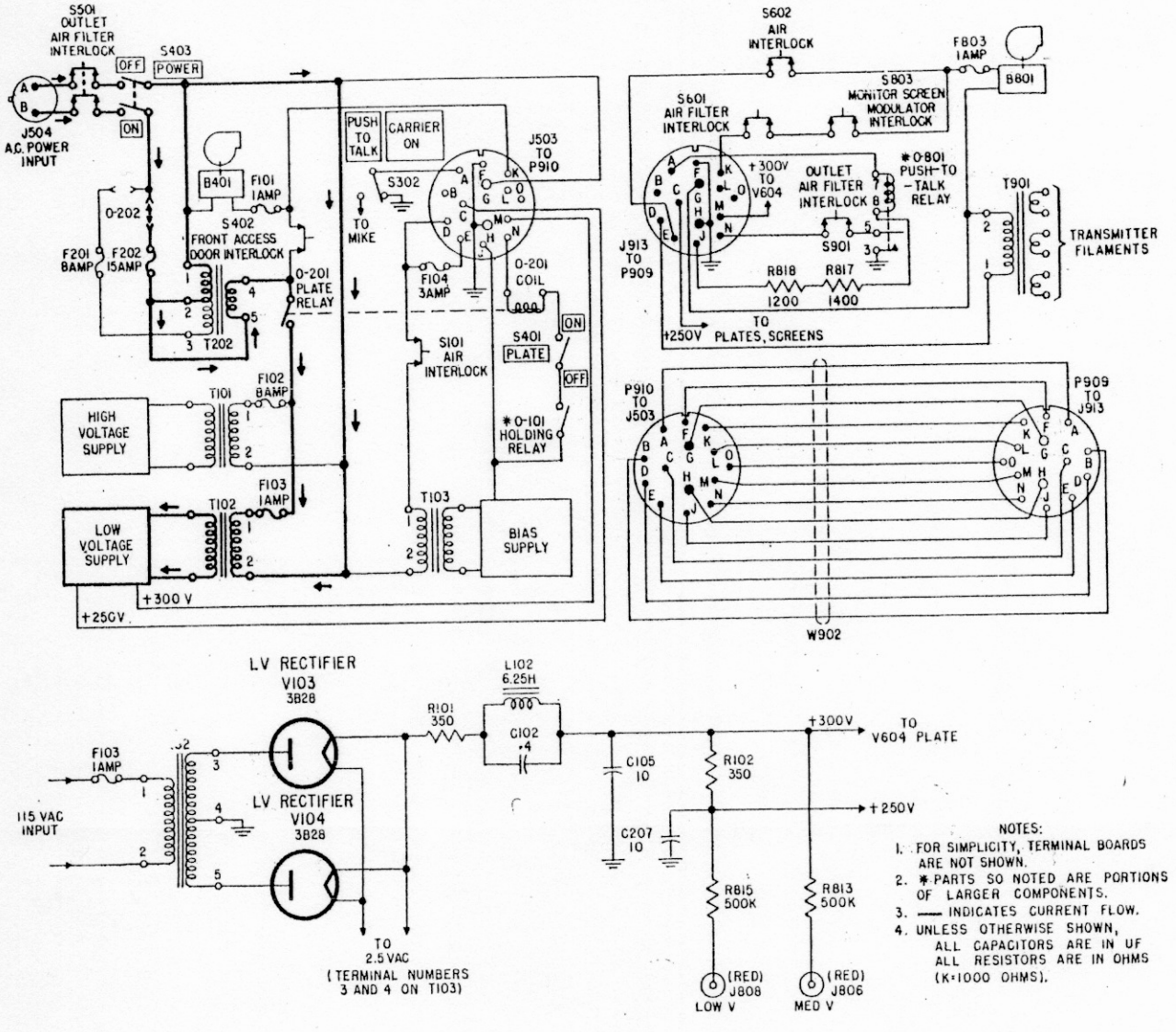

Figure 3-28. Low Voltage D-C Supply, Simplified Schematic

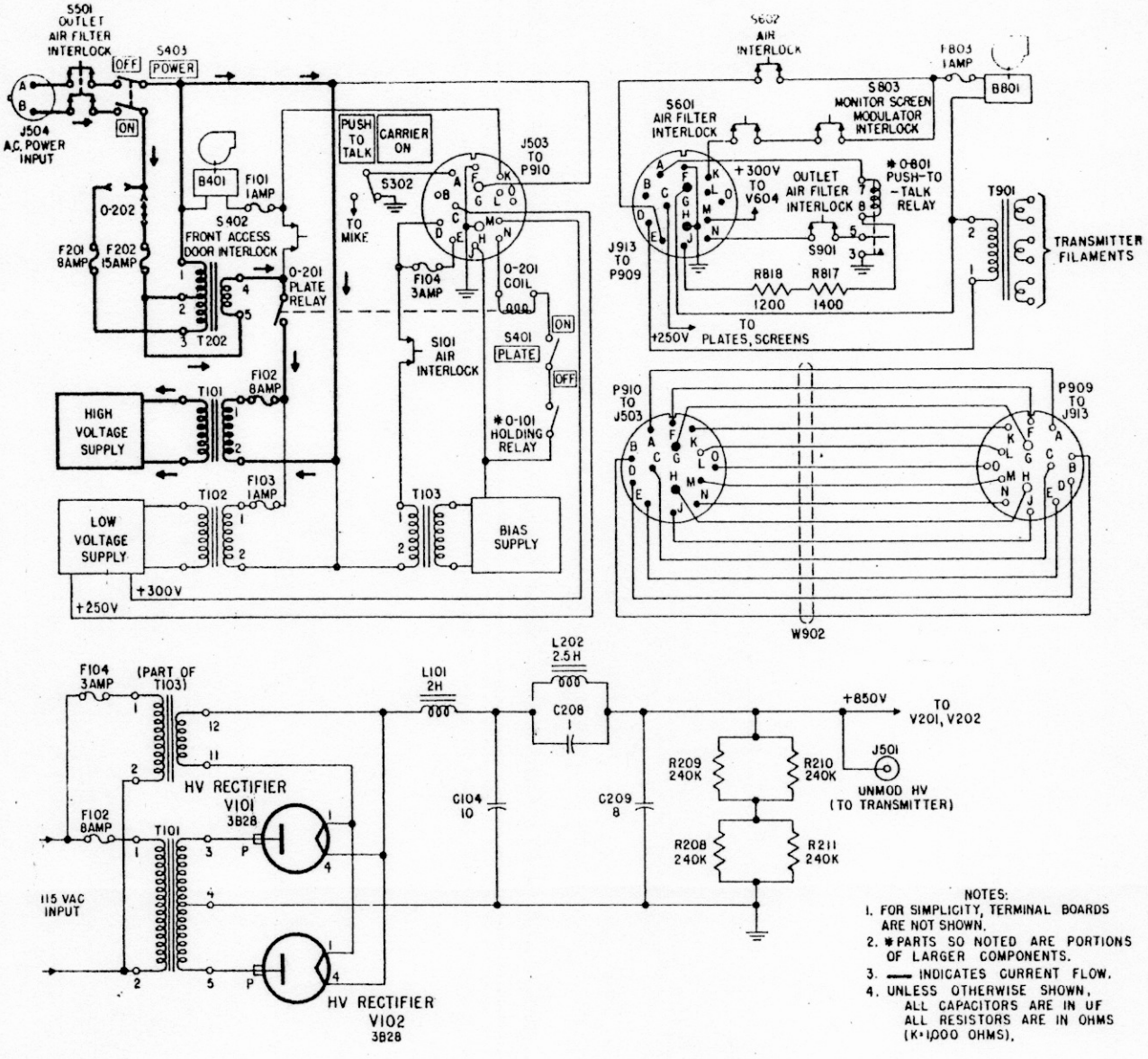

Figure 3-29. High Voltage D-C Supply, Simplified Schematic

2.29 Time Delay Operation

Referring to Figure 3-30, the time delay relay K-101 in conjunction with holding relay 0-101 keeps the plate relay 0-201 from being energized until a time of one minute has elapsed. The time delay relay is a temperature operated device. Terminals 1 and 6 are the heater. This circuit is connected to the filament winding of the filament transformer with one pair of contacts in the holding relay in series with one side of the line. The contacts in the holding relay, terminals 4 and 5, are closed as long as the holding relay is in the unenergized position. This causes the filament or heater in the time delay relay to heat as soon as the set is turned on. After the one minute of time has elapsed, the bimetal bar in the time delay relay will have altered its shape such that the contacts in this relay will close and the -100 volts on its terminals 3 and 4 will be applied to the winding of the holding relay 0-101. As the holding relay operates, the contacts between terminals 2 and 3 of the holding relay will close and hold this relay closed until the set is turned off. Also, when the contacts between 2 and 3 close, the -100 volts is applied through the plate switch to the winding of plate relay 0-201. The closing of the holding relay also opens the circuit to the heater of the time delay relay. Thus, there is no voltage applied to the heater of the time delay relay during the operation of the set; only while it is warming up.

2.30 Voltage Measurements in the Modulator

There is a panel on the modulator unit with test jacks to measure the various voltages in the modulator unit. "METER 1" on the transmitter may be used with the "METER SELECTOR SWITCH" in position 9 to make most of the measurements available at the jacks on the modulator unit. The meter multiplier resistor for each circuit is incorporated in each circuit to be measured. For each jack, the full scale value of the meter is indicated on the rear side of the test jack cover plate. Also, the average reading that should be obtained at each jack is shown on the rear side of the test jack cover plate.

Freq. Range
220 400 Mc.

rce or Modified Colpitts Oscillator
ilt 136
3X2X2X3

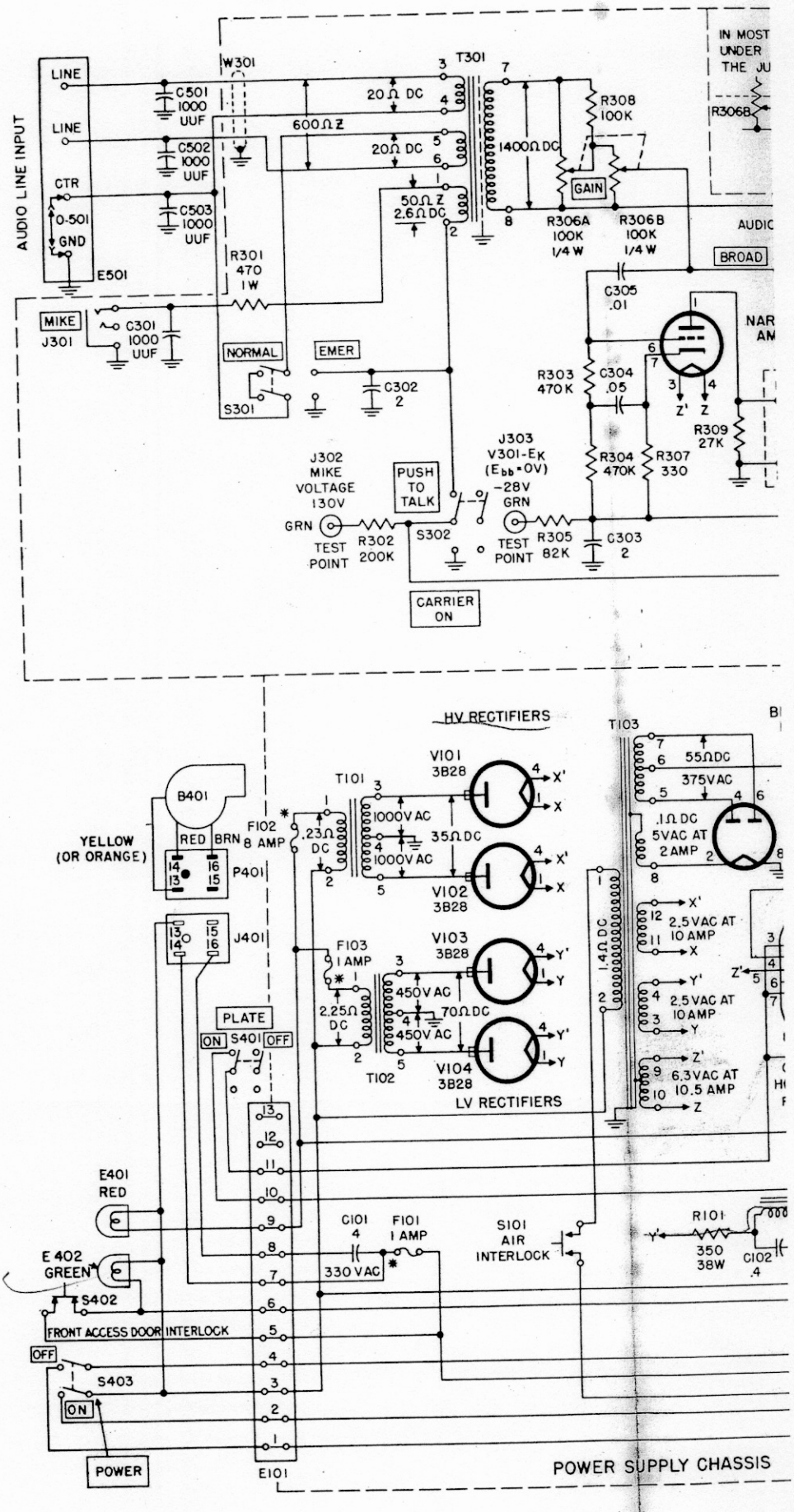

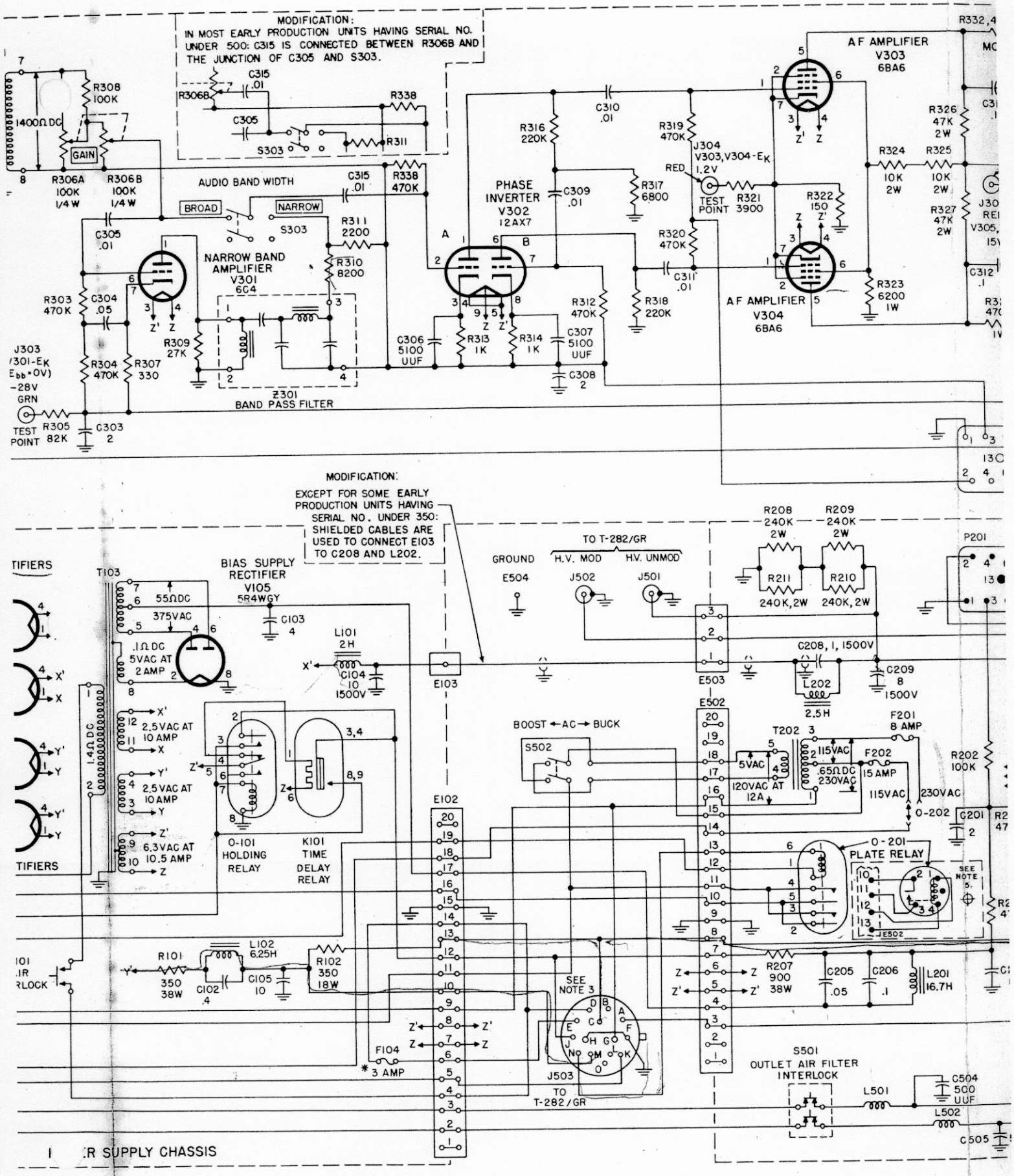
MODIFICATION:
IN MOST EARLY PRODUCTION UNITS HAVING SERIAL NO. UNDER 500: C315 IS CONNECTED BETWEEN R306B AND THE JUNCTION OF C305 AND S303.
MODIFICATION:
EXCEPT FOR SOME EARLY PRODUCTION UNITS HAVING SERIAL NO. UNDER 350: SHIELDED CABLES ARE USED TO CONNECT E103 TO C208 AND L202.
AF AMPLIFIER V303 6BA6
AF AMPLIFIER V304 6BA6
PHASE INVERTER V302 12AX7
NARROW BAND AMPLIFIER V301 6C4
BIAS SUPPLY RECTIFIER V105 5R4WGY
AUDIO BAND WIDTH
BROAD
NARROW
S303
Z301 BAND PASS FILTER
TEST POINT
GAIN
R308 100K
R306A 100K 1/4 W
R306B 100K 1/4 W
1400Ω DC
R3068
C315 .01
C305
R338
R311
C310 .01
R316 220K
R319 470K
J304 V303, V304-EK
RED 1.2V
R317 6800
C309 .01
R321 3900
R322 150
R320 470K
C311 .01
R318 220K
R312 470K
R313 1K
R314 1K
C306 5100 UUF
C307 5100 UUF
C308 2
R326 47K 2W
R324 10K 2W
R325 10K 2W
R327 47K 2W
R323 6200 1W
C312 .1
R332,4
C305 .01
R303 470K
C304 .05
R304 470K
R307 330
R309 27K
R310 8200
C303 2
R305 82K
J303 (V301-EK Ebb=0V) -28V GRN
TIFIERS
T103
55Ω DC
375VAC
.1Ω DC 5VAC AT 2 AMP
1.4Ω DC
2.5VAC AT 10 AMP
6.3VAC AT 10.5 AMP
C103 4
L101 2H
C104 .10 1500V
E103
E504
J502
J501
GROUND
TO T-282/GR
H.V. MOD
H.V. UNMOD
R208 240K 2W
R209 240K 2W
R211 240K, 2W
R210 240K, 2W
P201
C208, 1, 1500V
L202 2.5H
C209 8 1500V
E503
E502
BOOST ← AC → BUCK
S502
T202
5VAC
120VAC AT 12A
115VAC
.65Ω DC 230VAC
F201 8 AMP
F202 15 AMP
115VAC
230VAC
0-202
0-201 PLATE RELAY
SEE NOTE 5.
J502
R202 100K
C201
0-101 HOLDING RELAY
K101 TIME DELAY RELAY
E102
R101 350 38W
L102 6.25H
C102 .4
C105 .10
R102 350 18W
F104 * 3 AMP
SEE NOTE 3
J503
TO T-282/GR
R207 900 38W
C205 .05
C206 .1
L201 16.7H
S501 OUTLET AIR FILTER INTERLOCK
L501
L502
C504 500 UUF
C505
R SUPPLY CHASSIS

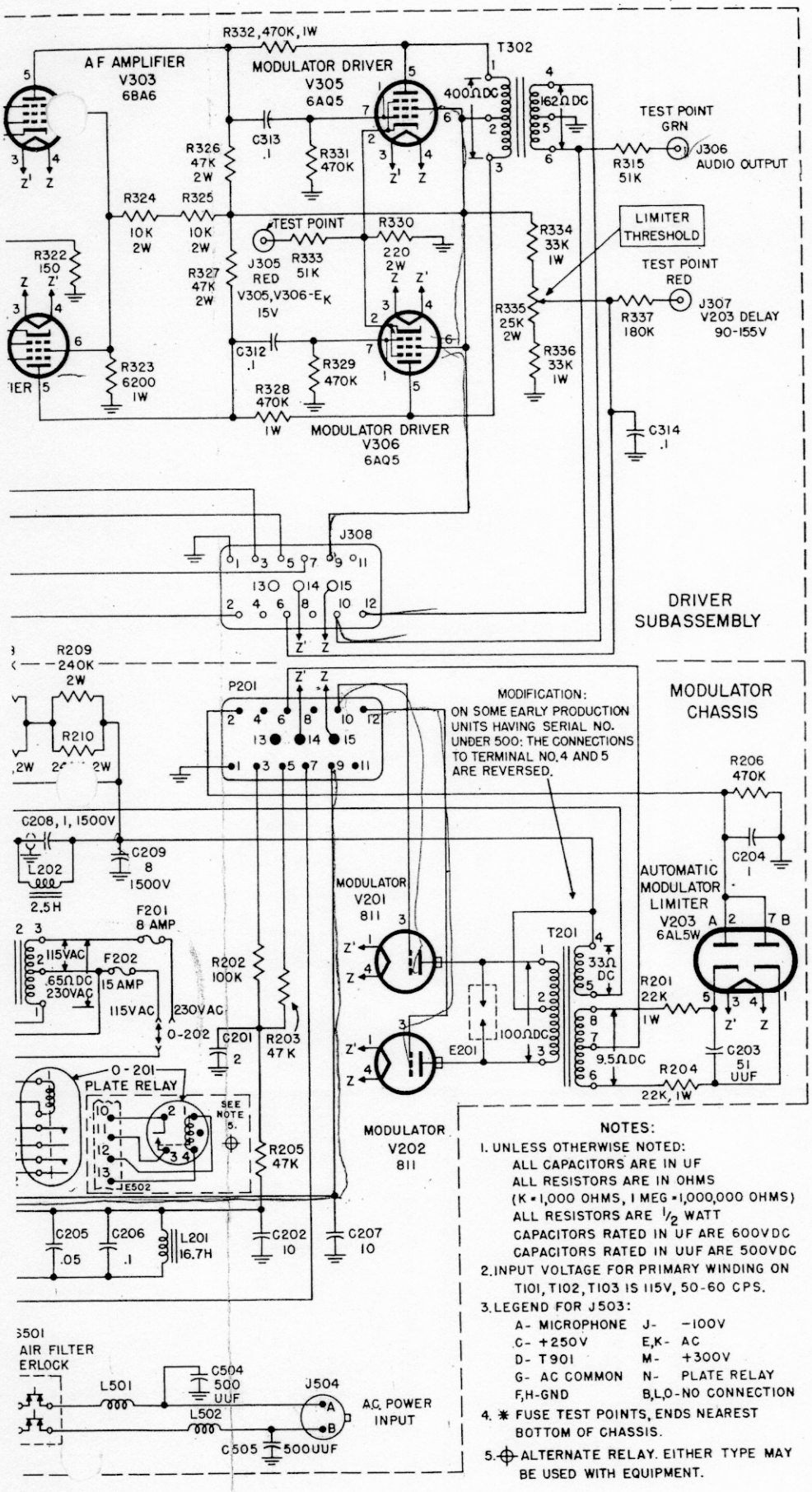

Figure 3-30 Modulator-Power Supply MD-141/GR, Schematic Diagrar

3 uv input modulation 30% 1Kc
will produce at 10 db with S/N at least 10 db

1 osc. Butler CR-32/U
2nd " CR-23/U
1st i-f-three tuned circuits
10.4 mc. primary purpose
good image rejection
2nd i-f-three stages of
amplification 6 mcs. primary
purpose selectivity.

r-f minus 1st i-f = Xtal freq.
9

image freq = r-f ± (2 i-f)

r-f - 80.8

i-f = (fs - fo)

fi = 2(fs - fo)

fi = 2fo - fs

Uses series Noise Limiter +
Squeld circuit for noise
control

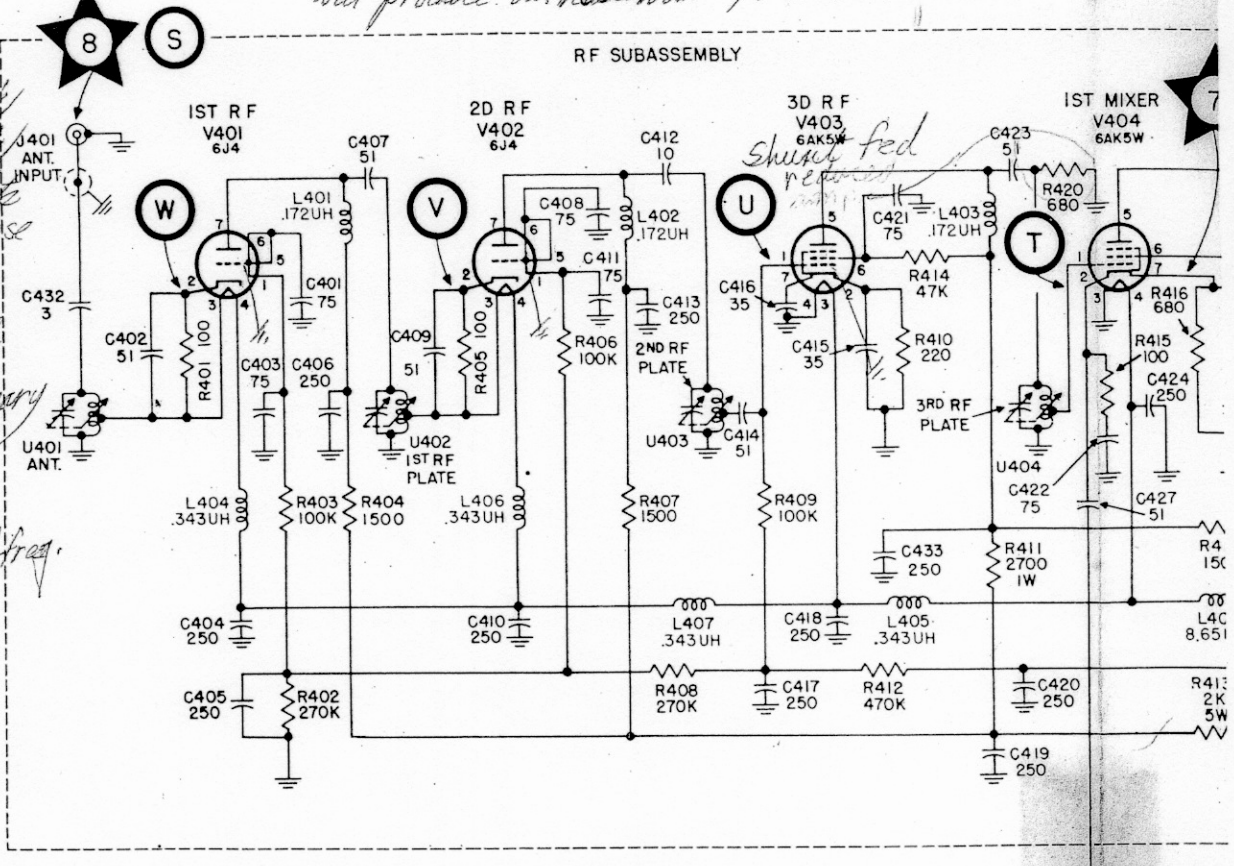

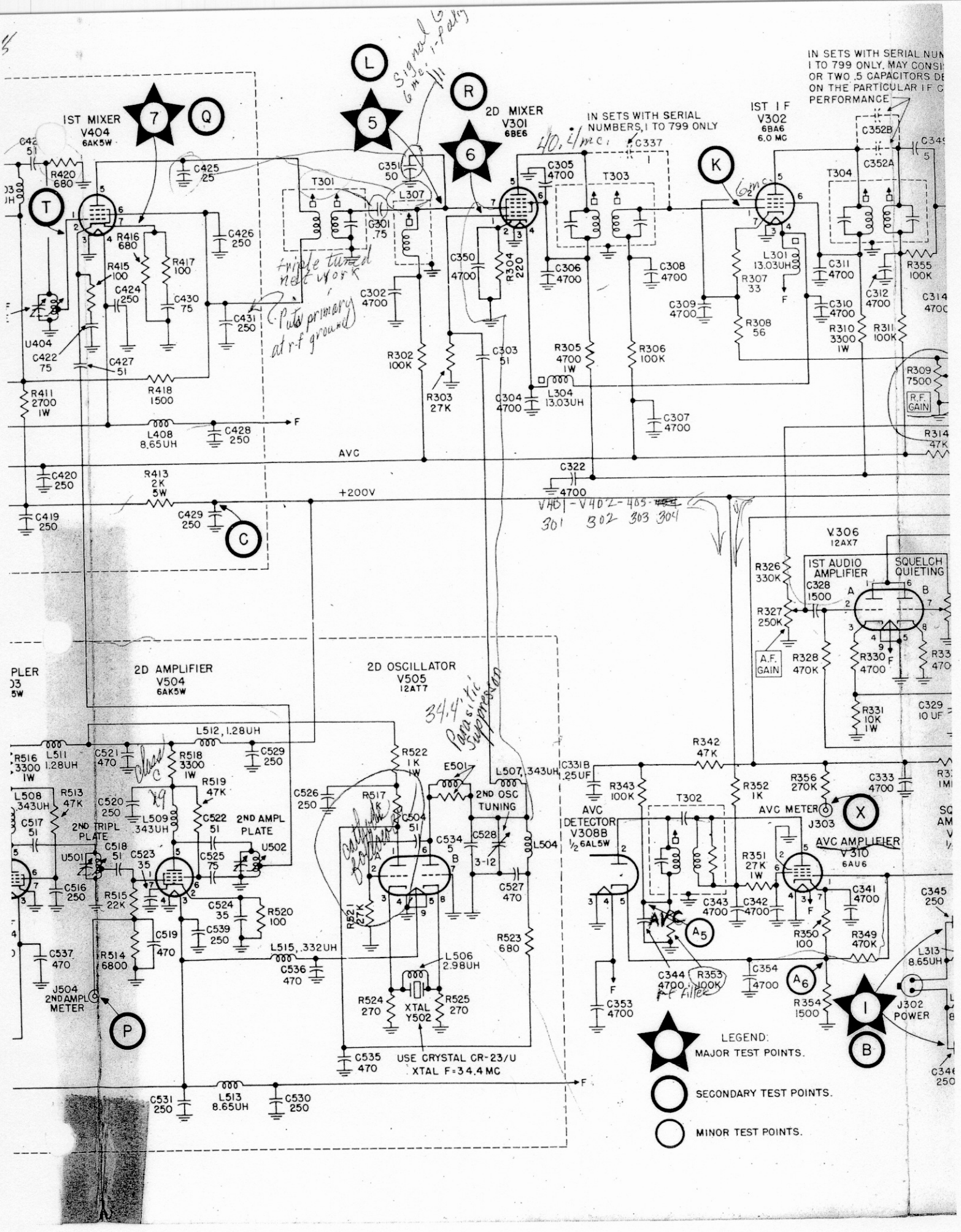

IST MIXER
V404
6AK5W
2D MIXER
V301
6BE6
IN SETS WITH SERIAL NUMBERS, 1 TO 799 ONLY
IST I F
V302
6BA6
6.0 MC
IN SETS WITH SERIAL NUM
1 TO 799 ONLY. MAY CONSI
OR TWO .5 CAPACITORS DE
ON THE PARTICULAR I F C
PERFORMANCE
T301
T303
T304
L307
U404
AVC
+200V
R.F. GAIN
V306
12AX7
IST AUDIO AMPLIFIER
SQUELCH QUIETING
A.F. GAIN
2D AMPLIFIER
V504
6AK5W
2D OSCILLATOR
V505
12AT7
2ND TRIPL PLATE
2ND AMPL PLATE
2ND OSC TUNING
AVC DETECTOR
V308B
1/2 6AL5W
AVC METER
J303
AVC AMPLIFIER
V310
6AU6
J504
2ND AMPL METER
XTAL
Y502
USE CRYSTAL CR-23/U
XTAL F=34.4 MC
J302
POWER
LEGEND:
MAJOR TEST POINTS.
SECONDARY TEST POINTS.
MINOR TEST POINTS.

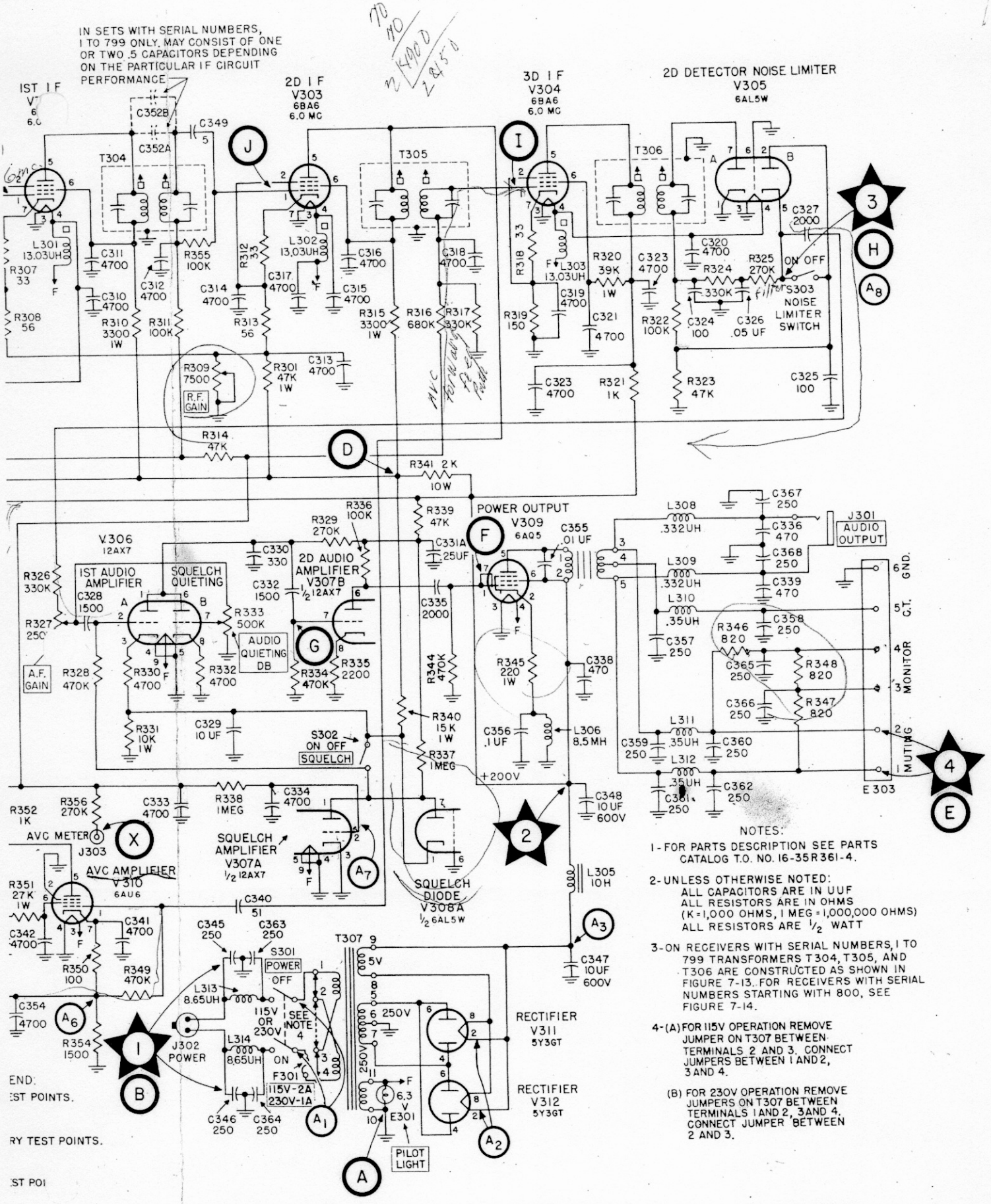

NOTES:

1 - FOR PARTS DESCRIPTION SEE PARTS CATALOG T.O. NO. 16-35R361-4.

2 - UNLESS OTHERWISE NOTED:
ALL CAPACITORS ARE IN UUF
ALL RESISTORS ARE IN OHMS
(K = 1,000 OHMS, 1 MEG = 1,000,000 OHMS)
ALL RESISTORS ARE 1/2 WATT

3 - ON RECEIVERS WITH SERIAL NUMBERS, 1 TO 799 TRANSFORMERS T304, T305, AND T306 ARE CONSTRUCTED AS SHOWN IN FIGURE 7-13. FOR RECEIVERS WITH SERIAL NUMBERS STARTING WITH 800, SEE FIGURE 7-14.

4 - (A) FOR 115V OPERATION REMOVE JUMPER ON T307 BETWEEN TERMINALS 2 AND 3. CONNECT JUMPERS BETWEEN 1 AND 2, 3 AND 4.

(B) FOR 230V OPERATION REMOVE JUMPERS ON T307 BETWEEN TERMINALS 1 AND 2, 3 AND 4. CONNECT JUMPER BETWEEN 2 AND 3.

Figure 2-7 Radio Receiver R-361/GR

CHAPTER FOUR
R-278B/GR RECEIVER

1.0 GENERAL

The type R-278B/GR receiver is a multi-channel superheterodyne receiver. Triple conversion is used, utilizing three crystal controlled oscillators. Several views of the receiver are shown in Figures 4-15 through 4-18.

NOTE: The R-278B/GR receiver described in this chapter is manufactured by Collins Radio Co. The R-278B/GR supercedes the R-278A/GR. The R-278A/GR superceded the R-278/GR. These three receivers are all the same basic receiver. A guard channel section was incorporated in the R-278/GR and in the early models of the R-278A/GR, but the R-278B/GR does not incorporate a guard channel section.

The R-278B/GR receiver manufactured by Delco Radio is identical to the Collins R-278B/GR, except for a few minor differences. One difference is that in the Delco R-278B, avc is applied to the 1st r-f amplifier, whereas in the Collins R-278B, avc is not applied to the 1st r-f amplifier.

1.1 Frequency System

The receiver will operate on any one of 1800 frequencies spaced at 0.1 mc intervals. There are 1750 frequencies spaced at 0.1 mc intervals in the UHF band extending from 225.0 to 399.9 mc. However, the frequency system employed is capable of providing 50 additional frequencies spaced at 0.1 mc intervals from 220.0 to 224.9 mc. Therefore, the receiver will tune to 1800 crystal controlled frequencies spaced at 0.1 mc intervals from 220.0 to 399.9 mc. The receiver is tuned by a motor-driven frequency selector unit. The frequency diagram is shown in Figure 4-1.

The r-f section tunes from 220.0 to 399.9 mc in 1 mc steps, a total of 180 steps. There are three i-f sections. The first i-f section tunes from 40.0 to 49.9 mc in 0.1 mc steps, a total of 100 steps. The second i-f section tunes from 9.0 to 9.9 mc in 0.1 mc steps, a total of 10 steps. The third i-f section operates at a fixed frequency of 2.05 mc.

There are 18 crystals in the main oscillator, 10 crystals in the second oscillator and 10 crystals in the third oscillator, a total of 38 crystals to obtain 1800 crystal controlled channels.

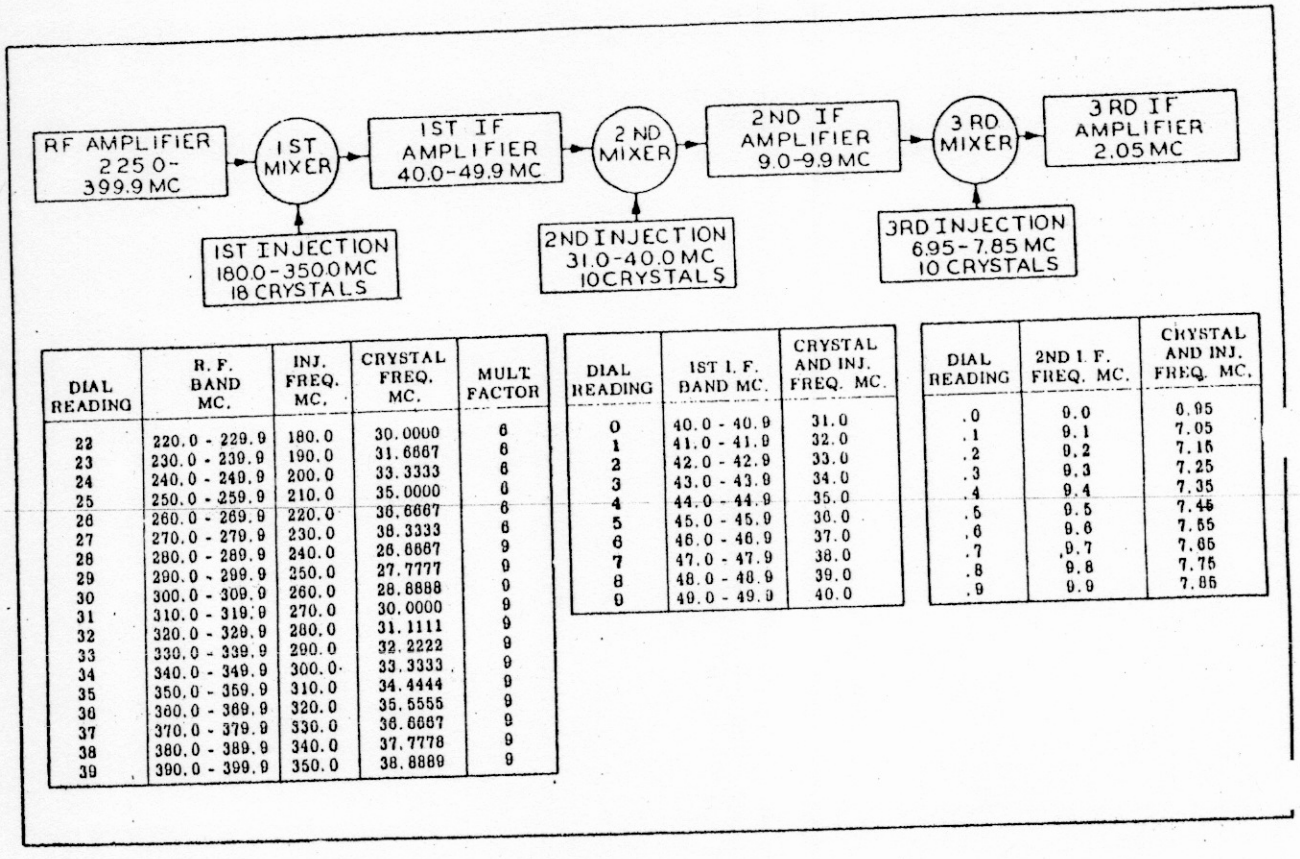

DIAL READING	R. F. BAND MC.	INJ. FREQ. MC.	CRYSTAL FREQ. MC.	MULT FACTOR
22	220.0 - 229.9	180.0	30.0000	6
23	230.0 - 239.9	190.0	31.6667	6
24	240.0 - 249.9	200.0	33.3333	6
25	250.0 - 259.9	210.0	35.0000	6
26	260.0 - 269.9	220.0	36.6667	6
27	270.0 - 279.9	230.0	38.3333	6
28	280.0 - 289.9	240.0	26.6667	9
29	290.0 - 299.9	250.0	27.7777	9
30	300.0 - 309.9	260.0	28.8888	9
31	310.0 - 319.9	270.0	30.0000	9
32	320.0 - 329.9	280.0	31.1111	9
33	330.0 - 339.9	290.0	32.2222	9
34	340.0 - 349.9	300.0	33.3333	9
35	350.0 - 359.9	310.0	34.4444	9
36	360.0 - 369.9	320.0	35.5555	9
37	370.0 - 379.9	330.0	36.6667	9
38	380.0 - 389.9	340.0	37.7778	9
39	390.0 - 399.9	350.0	38.8889	9

DIAL READING	1ST I. F. BAND MC.	CRYSTAL AND INJ. FREQ. MC.
0	40.0 - 40.9	31.0
1	41.0 - 41.9	32.0
2	42.0 - 42.9	33.0
3	43.0 - 43.9	34.0
4	44.0 - 44.9	35.0
5	45.0 - 45.9	36.0
6	46.0 - 46.9	37.0
7	47.0 - 47.9	38.0
8	48.0 - 48.9	39.0
9	49.0 - 49.9	40.0

DIAL READING	2ND I. F. FREQ. MC.	CRYSTAL AND INJ. FREQ. MC.
.0	9.0	6.95
.1	9.1	7.05
.2	9.2	7.15
.3	9.3	7.25
.4	9.4	7.35
.5	9.5	7.45
.6	9.6	7.55
.7	9.7	7.65
.8	9.8	7.75
.9	9.9	7.85

Figure 4-1. Frequency Diagram

The main oscillator crystals are type CR-32/U, operated in a thermostatically controlled crystal oven. The crystal frequency is multiplied 6 times when the receiver is tuned to any frequency from 220.0 to 279.9 mc and the crystal frequency is multiplied 9 times when the receiver is tuned from 280.0 to 399.9 mc. The 18 output frequencies from the frequency multiplier-amplifier are in 10 mc steps from 180.0 to 350.0 mc.

The second oscillator crystals are type CR-23/U. The 10 output frequencies of the second oscillator are in 1 mc steps from 31.0 to 40.0 mc.

The third oscillator crystals are type CR-18U. The 10 output frequencies of the third oscillator are in 0.1 mc steps from 6.95 to 7.85 mc.

1.2 Tuning System

A motor-driven frequency selector is used to permit rapid change of the operating frequency. The frequency selector unit has three rotary output shafts that selects the proper crystal units and tunes various circuits to establish a particular operating frequency. These output shafts are called the 10 mc, the 1 mc and the 0.1 mc shafts. The 10 mc shaft rotates in 18 incremental steps, each step representing 10 mc. The 1 mc shaft rotates in 10 incremental steps, each step representing 1 mc. The 0.1 mc shaft rotates in 10 incremental steps, each step representing 0.1 mc. By combining the outputs of these shafts and applying the mechanical sum to the tuning of the r-f and i-f circuits, any one of 1800 frequencies in the range of 220.0 to 399.9 mc may be selected as explained below.

The r-f amplifier is tuned in 180 one mc steps by the 10 mc shaft (18 positions) and the 1 mc shaft (10 positions) whose rotary motions are combined in a differential mechanism to produce 180 rotational positions.

The 1st injection system (main oscillator and frequency multiplier-amplifer sections) is tuned in 18 ten mc steps by the 10 mc shaft, which also operates the main oscillator crystal selector switch to select one of 18 crystal units.

The 1st i-f section is tuned by the 1 mc and 0.1 mc shafts, the rotations of which are combined in a differential mechanism to produce 100 tenth mc steps. The crystal selector switch and tuned circuits of the 2nd injection oscillator are controlled by the 1 mc shaft (10 positions).

The 2nd i-f section is tuned in 10 tenth mc steps by the 0.1 mc shaft, which also operates the crystal switch of the 3rd injection oscillator (10 positions).

The frequency selector unit is controlled by a switch panel on the front of the receiver, which permits the operating frequencies of 10 channels to be pre-set. Any one of the 10 pre-set channels can be selected by operation of the channel selector switch on the front panel of the receiver or by a remote channel selector switch. Pre-set switches for setting the frequency of a manual channel are also provided. The manual channel can be selected only by the channel selector switch on the front panel of the receiver.

1.3 Frequency Example

As an example case of frequency selection in each of the r-f and i-f units, assume that one wishes to tune the receiver to a signal frequency of 395.5 mc. One of the 10 pre-set channels (assume channel 10) is set to 395.5 mc by turning the knurled disks to 395.5 as indicated on the dials. The CHANNEL SELECTOR switch is turned to channel 10. The frequency selector motor starts and produces a mechanical output that tunes the receiver properly in the following manner:

R-F amplifier	395.5 mc
1st injection system	350.0 mc
1st i-f section	45.5 mc
2nd injection system	36.0 mc
2nd i-f section	9.5 mc
3rd injection system	7.45 mc
3rd i-f section	2.05 mc

1.4 Audio Output

The main output of the receiver is 3 watts into a 600 ohm balanced load. This output is available at the PHONE jack on the front panel of the receiver or at the AUXILIARY CONTROL connector. A low level output of +10 dbm into a 600 ohm load is available at the AUXILIARY CONTROL connector or at the LOCAL CONTROL connector. A cathode follower output (low impedance) is available at the AUXILIARY CONTROL connector for operation of direction finder equipment.

The FREQUENCY RESPONSE switch on the front panel of the receiver permits the selection of a BROAD or NARROW audio frequency response. In the BROAD position the audio frequency response is flat within 4 db from 200 to 20,000 cps. In the NARROW POSITION the audio frequency response is as follows:

200 cps	-	greater than 10 db attenuation
400 cps	-	less than 5 db attenuation
1000 cps	-	0 db attenuation
3000 cps	-	less than 5 db attenuation
5000 cps	-	greater than 10 db attenuation

The audio frequency distortion is less than 5 percent at 30% modulation and 3 watts output.

1.5 Selectivity

The selectivity of the receiver, with reference to 2.05 mc (the 3rd i-f section), is such that the bandwidth is not less than 65 kc at 6 db attenuation and not more than 185 kc at 60 db attenuation.

1.6 Sensitivity

The sensitivity of the receiver is such that at maximum setting of the R-F GAIN control, a 3 microvolt signal modulated 30% at 1,000 cps will produce not less than 1 watt output at not less than 10 db signal to noise ratio.

1.7 Antenna Circuit

The antenna input impedance is 52 ohms. A low-pass filter is used between the antenna terminal on the front panel and the input circuit of the 1st r-f amplifier. The receiver is designed for use with a directional antenna or omni-directional antenna. The directional antenna is used when the direction finder output of the receiver is used. The antenna input connector is a coaxial type connector.

The image frequency rejection is more than 60 db below the signal input level. The intermediate frequency rejection is more than 80 db below the signal input level.

1.8 AVC Characteristics

The audio output is constant within ± 2 db for signal input from 10 microvolts to 0.1 volt and is constant within ± 6 db for signal input from 0.1 volt to 2 volts.

The AVC TIME CONSTANT switch on the front panel of the receiver permits the selection of a short time constant of 1/10 second for communications or a long time constant of less than 3 seconds for direction finding operation.

1.9 Noise Limiters

The receiver uses a series noise limiter, a shunt noise limiter and a noise cancellation detector. A carrier operated relay and squelch circuit is also used.

1.10 Power Requirements

The receiver operates from either 115 or 230 volts, single phase, 50 to 60 cycles power source. The power consumption for normal operation is 385 watts during the first ten minutes and 265 watts thereafter. When a channel selection is being made during the first ten minutes the consumption is 470 watts and 350 watts thereafter. There are two fuses located on the front panel of the receiver. The filament fuse is 5 amps for 115 volt operation and is 3 amps for 230 volt operation. The plate fuse is 3 amps for 115 volt operation and is 1.5 amps for 230 volt operation.

1.11 Construction

The receiver contains 10 sub-chassis which may be removed individually from the basic frame by loosening the retaining screws, releasing mechanical couplings, where used, and lifting out the unit. Each sub-chassis is electrically connected to the system by a cable that plugs into a receptacle on the basic frame. In this way a sub-chassis may be removed from the basic frame, but still be electrically connected for the purpose of maintenance and bench checks. The sub-chassis are as follows:

Unit	Location
R-F amplifier	Upper, right, rear
Main oscillator	Lower, left, rear
Frequency mult-amp	Upper, left, rear
1st i-f amplifier	Top, center
2nd i-f amplifier	Top, right of center
3rd i-f amplifier	Bottom, right
Audio amplifier	Rear, right, lower
Power supply rectifier	Top, left
Power supply filter	Top, extreme right
Frequency selector unit	Front

2.0 THEORY OF OPERATION

With reference to Figure 4-20, the individual circuits of the receiver will now be considered in detail.

2.1 R-F Amplifier

The radio frequency amplifier consists of two grounded grid amplifiers, V-101 and V-102, type 6J4 tubes, operating in conjunction with three special r-f tuner circuits Z-101, Z-102 and Z-103. This type of r-f tuner, shown in Figure 4-2, consists of a variable capacitor and a variable inductor, which are rotated simultaneously so that in 180 degrees of rotation the resonant frequency changes linearly 180 mc or 1 mc per degree. The variable capacitor consists of two stator plates and three rotor plates. The front and rear rotor plates are radially slotted for the purpose of alignment adjustments. The inductive loop consists of the inductance stator rod, the inductance ring and the inductance rotor rod. The three r-f tuners are geared together and driven through a mechanical differential from the 10 mc and 1 mc autopositioner output shafts.

The r-f signal received at the antenna terminal is conducted over type RG-58/U coaxial line through r-f low-pass filter Z-1202 to the r-f amplifier input circuit, where it is link coupled into the first r-f tuned circuit. The signal is amplified in the two grounded-grid, shunt-fed amplifiers V-101 and V-102. The gain of both stages are controlled by the avc circuit. Bifilar chokes in the filament leads and the inductive impedances Z-104 and Z-105 in the plate shunt-fed circuits isolate the power circuits from

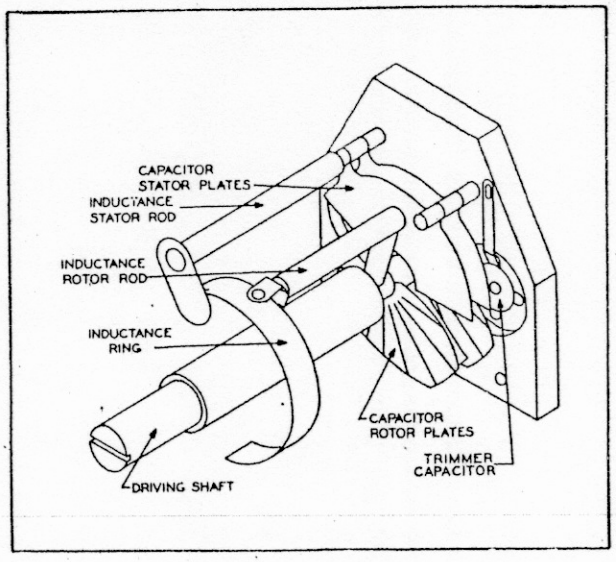

Figure 4-2. Construction of R-F Tuner

radio frequency voltages. The r-f signal is then fed to the first mixer through a soldered connection, which connects the r-f amplifier unit to the first i-f amplifier unit.

2.2 First Injection System

The first injection system is contained in two units designated as the "main oscillator" unit and the "frequency multiplier-amplifier" unit.

2.2.1 Main Oscillator

The main oscillator employs a Butler circuit and consists of: V-201, type 12AT7 tube, a high mu duo-triode; a bank of 18 type CR-32/U crystal units with a crystal switch, all inside a temperature-controlled crystal oven; a bank of 18 coils with associated switch; and other circuit elements. The oscillator consists of a grounded grid amplifier followed by a cathode follower which in turn couples back into the grounded grid stage through a crystal.

To understand the operation of this oscillator imagine a random positive pulse appearing at the cathode, pin 3, of the grounded grid amplifier, V-201A. Since the grid is grounded through a 22 ohm resistor, a rise in cathode voltage will cause a decrease in plate current and therefore an increase in plate voltage. This positive pulse is coupled to the grid of the cathode follower, V-201B. The cathode voltage follows the grid voltage so that the positive pulse is coupled back to the cathode of the grounded grid amplifier through the crystal. The crystal presents a low impedance path only at series resonance. Thus oscillations are generated by the stage and sustained by the feedback loop. The plate load of the grounded grid amplifier is the tuned circuit C-203 in parallel with one of 18 inductances selected by the 10 mc Autopositioner output shaft. The frequency of oscillation can be adjusted over a small range by adjusting the tuning of the plate circuit. This circuit is normally adjusted so that the frequency of oscillation is precisely as desired, thereby eliminating any inaccuracy in the frequency of the crystal unit. A 1.5 microhenry inductance, L-201, is used to resonante with the stray circuit capacities at approximately 30 mc. The oscillator signal is fed to V-301 through a capacitor and a soldered connection connecting the oscillator unit with the frequency-multiplier amplifier unit.

The crystal is maintained at a constant temperature by the thermostatically controlled crystal oven. The crystal oven operates on 115 volts a-c and includes two heater elements and two thermostats. One heater element has a rating of approximately 100 watts and is employed to bring the oven to operating temperature rapidly when the equipment is first turned on. The second heater element has a rating of approximately 20 watts and operates intermittently to maintain the oven at the proper temperature (75° C $\pm$ 5° C).

2.2.2 Frequency Multiplier-Amplifier

The frequency multiplier consists of V-301 and V-302, type 6AK5W tubes, a tapered toroidal coil assembly in the plate circuit of the first stage and

an r-f tuner, similar to that described in section 2.1 (R-F Amplifier), in the plate circuit of the second stage. The tapered toroidal coil is a variable inductor made up of 18 turns of wire. A rotary contact progressively adds an additional turn of wire (from a shorted condition) as the receiver frequency is changed in 10 mc steps from the highest to the lowest frequency.

The oscillator signal (26.6667 to 38.8889 mc) is received on the grid of V-301. The tapered toroidal coil in the plate circuit is tuned to twice the oscillator frequency for the six lowest injection frequencies and to three times the oscillator frequency for the twelve highest injection frequencies. The signal is then fed to the grid of V-302. The signal frequency is tripled in this stage, as the r-f tuner in the plate circuit is tuned to three times the frequency applied to its grid.

The amplifier section of the frequency multiplier-amplifier is a three stage grounded-grid, shunt-fed amplifier employing V-303, V-304 and V-305, type 6J4 tubes, and three special r-f tuners, Z-305, Z-307 and Z-309. The four r-f tuners in the frequency multiplier-amplifier differ from those used in the r-f amplifier as they have differently shaped capacitor rotor plates and are tuned to a lower frequency. The injection signal (180 to 350 mc) is amplified in this three stage amplifier and fed to the cathode of the first mixer. Bifilar chokes in the filament leads and inductive impedances Z-304, Z-306 and Z-308 in the plate shunt-fed circuits isolate the power circuits from radio frequency voltages. All stages in the frequency multiplier-amplifier unit are tuned from the output shaft of the 10 mc Autopositioner through a series of gears. Likewise, the switching in the main oscillator unit is done from the output shaft of the 10 mc Autopositioner.

2.3 First Mixer

The first mixer consists of V-401, type 6AK5W tube. This mixer combines the r-f signal (220.0 to 399.9 mc), received on the grid, with the first injection signal (180 to 350 mc), received on the cathode, to produce the first intermediate frequency in the range of 40.0 to 49.9 mc. The output transformer is permeability tuned as explained below.

2.4 First I-F Section

The first i-f amplifier consists of V-402, type 6AK5W tube, and two interstage i-f transformers. The 40.0 to 49.9 mc i-f signal is amplified and fed to the grid of the second mixer, V-403. The gain of the first i-f section is controlled by the avc circuit. Because the r-f channels are spaced at 0.1 mc intervals, and the first injection system is tunable at 10 mc intervals, there are 100 possible first intermediate frequencies. The interstage transformers, T-401 and T-402 are therefore made tunable in 100 tenth mc increments by means of a differential tuning mechanism which includes a tuning rack that is cam driven from the 0.1 mc and 1.0 mc Autopositioner output shafts (see figure 4-14). The interstage transformers are permeability tuned by powered iron cores mounted on the rack. Cams on a fixed-bearing shaft driven from the 0.1 mc Autopositioner output shaft raise or lower a floating shaft driven from the 1 mc Autopositioner output shaft. Cams on this floating shaft raise or lower the tuning rack. Since each set of cams adjusts the rack in ten steps, the combination of the action of the two sets gives 100 positions of the tuning cores. Threaded studs on the cores make it possible to adjust each core independently when aligning. Trimmer capacitors across the tuned circuits are provided so that the most linear part of the tuning curve can be selected to give the best tracking.

2.5 Second Oscillator

The second injection system consists of V-404, type 12AT7 tube, in a Butler type oscillator circuit. This circuit employs one of ten type CR-23/U crystal units operating at frequencies from 31 to 40 mc. The theory of operation of a Butler oscillator circuit is explained in the discussion of the main oscillator. Selection of the correct crystal unit and the tuning of the plate circuit is done by the 1 mc Autopositioner output shaft. An injection frequency at each megacycle from 31 to 40 mc is provided. The second injection signal is fed to the cathode of the second mixer, V-403.

2.6 Second Mixer

The second mixer consists of V-403, type 6AK5W tube. This mixer combines the first i-f signal (40.0 to 49.9 mc) received on the grid with the second injection signal (31 to 40 mc) received on the cathode, to produce the second intermediate frequency of 9.0 to 9.9 mc.

2.7 Second I-F Section

The second i-f section consists of V-501, type 6 AU6 tube, and tuned circuits. The second i-f signal (9.0 to 9.9 mc) is conducted from the plate of the second mixer to the primary of T-501 over type RG-58/U coaxial line and thence to the grid of V-501 where it is amplified and fed to the grid of the third mixer. The stage is avc controlled and the interstage transformers are permeability tuned by a cam-driven tuning rack operating from the 0.1 mc Autopositioner output shaft. (See figure 4-14)

2.8 Third Oscillator and Mixer

The third oscillator-mixer consists of V-502, type 12AU7 tube, and one of ten type CR-18/U crystal units. A modified Colpitts type oscillator is used to generate one of ten frequencies in the frequency range of 6.95 to 7.85 mc, which signal is impressed on the cathode of the third mixer. The correct crystal unit is selected by the 0.1 mc Autopositioner output shaft. The second i-f signal is received on the grid of the third mixer. These signals are combined to produce the third intermediate frequency of 2.05 mc, which is carried over type RG-58/U coaxial line to T-601.

2.9 Third I-F Section

The third i-f signal is amplified in the three-stage third i-f section consisting of V-601, V-602 and V-603, type 6BA6 tubes, and four interstage i-f transformers tuned to 2.05 mc. The first i-f transformer is overcoupled and the last three are undercoupled. This is done to give the desired band-pass characteristics. The first two stages, V-601 and V-602,

are avc controlled. The secondary of the fourth interstage transformer, T604, is in the audio and avc detector circuits.

2.10 Audio Detector and Noise Limiters

Referring to Figure 4-3, the audio detector and noise limiters employ the following tubes: audio detector V-604A, 1/2 6AL5W tube; series noise limiter V-605A, 1/2 6AL5W tube; shunt noise limiter V-605B, 1/2 6AL5W tube; and noise cancellation detector V-608B, 1/2 12AX7 tube. The diode detector circuit is a conventional circuit in which V-604A operates as a rectifier; the diode load consists of R-613 and R-614 in series, by-passed by C-629. The output of the detector is a negative voltage (normally about -8 volts with respect to cathode of V-604A) upon which is superimposed the audio modulation signal.

The series diode limiter circuit employs diode element V-605A in a circuit which limits the audio output signal to approximately 40% upward modulation. Since impulse noises of the type encountered at UHF consists of very sharp pulses of several hundred percent modulation, this limiting action greatly reduces the amount of noise energy transmitted to the audio amplifier circuits without adversely affecting the intelligibility of voice signals. In the circuit employed, the plate of the diode is connected to the junction of R-613 and R-614 which act as a voltage divider. R-622 and C-634B act as a filter to establish a reference potential. R-623 and R-624 in series act as a diode load resistor across which the output audio signal is developed.

The operation of this circuit can best be understood by assuming V-605A to be an ideal diode; that is, perfectly conducting in one direction and completely non-conducting in the other direction. With a d-c developed bias of about -2 volts at point A, the output of the detector, the electron flow through the circuit will result in d-c potentials at points B, C and D, as shown in Figure 4-3. Note that point C is by-passed to ground so that its instantaneous potential to ground is not affected by the modulation signal. When the audio modulation is superimposed on the developed bias,

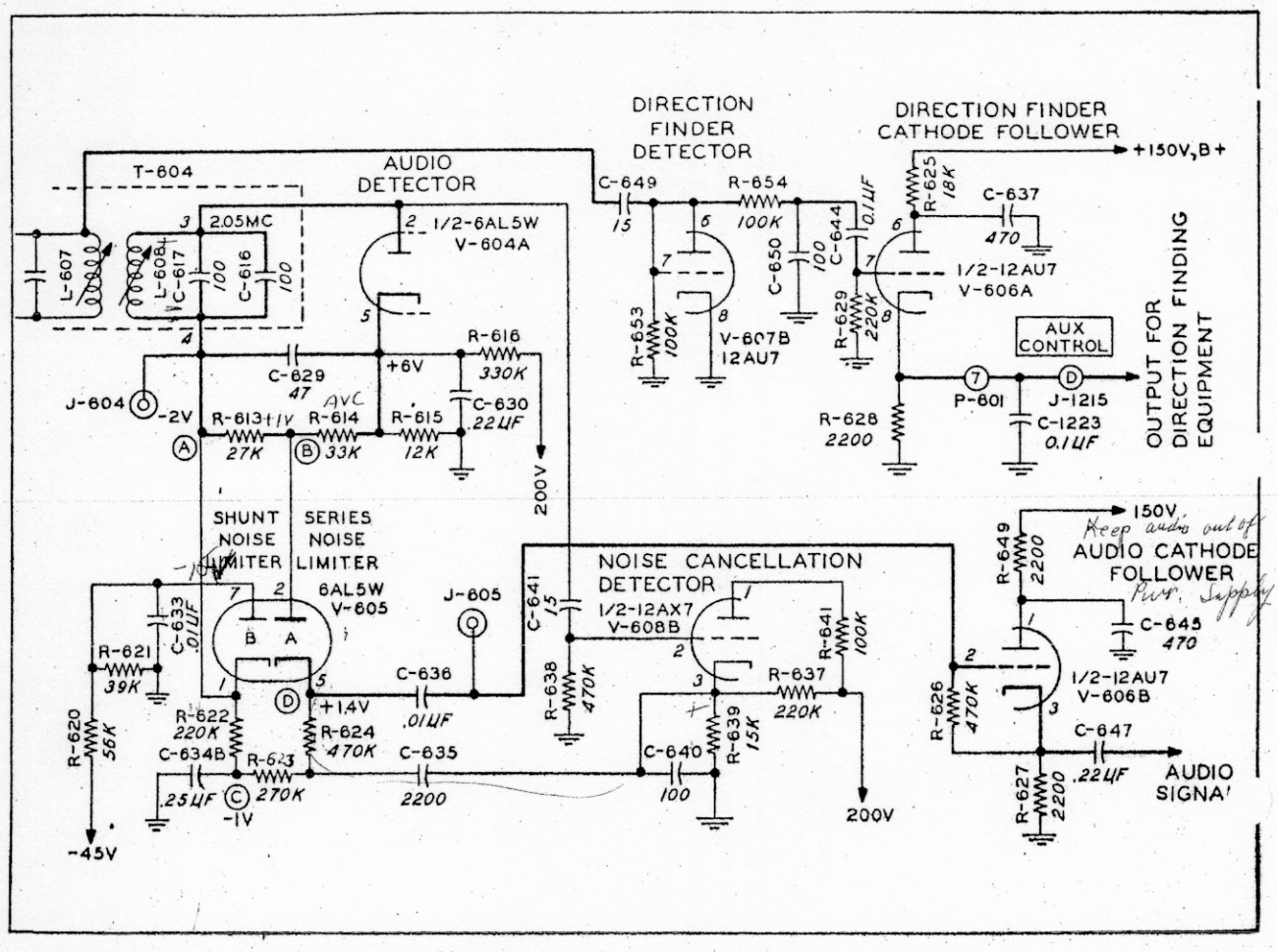

Figure 4-3. Audio Detector and Noise Limiters

the audio signal will be transmitted through the diode from point B to point D as long as the instantaneous potential of point B does not become more negative than that of point C. If this occurs, the electronic conduction of the diode will be cut off and point D will remain at the potential of point C until conduction is re-established. Downward modulation is not affected by this circuit.

The amount of noise energy remaining in the output of the series diode limiter circuit is further reduced by the introduction of noise pulses of about equal amplitude but of opposite polarity to cause noise cancellation. These pulses are generated by the noise cancellation detector V-608B. This tube operates as an "infinite impedance" type detector in which the i-f signal is applied to the grid of the tube and the detected output appears at the cathode. In this application, the tube is cathode biased by means of voltage divider R-637 and R-639 in series to about +15 volts so that only signals exceeding about 100% upward modulation will be detected. Noise pulses which will appear as positive pulses in the cathode circuit are coupled back into the output of the series diode limiter circuit by C-635.

A shunt type limiter has also been included in this receiver for the purpose of protecting the avc and squelch circuits from the effects of noise pulses. In this circuit, diode element V-605B is biased by means of voltage divider R-620 and R-621 to about -15 volts. When an i-f signal of peak amplitude greater than 15 volts is applied to this circuit, the diode conducts and effectively connects a very low impedance across the secondary of T-604 thus limiting the i-f voltage which can appear across it. This reduces the effect of noise impulses which ordinarily would generate appreciable avc voltage, thus reducing the sensitivity of the receiver to desired signals. Since the carrier operated relay control voltage is also developed by the avc detector-amplifier, this limiter also reduces the tendency of the silencer circuit to open in the presence of noise impulses.

2.11 Audio Cathode Follower

Referring to Figure 4-3, the audio cathode follower circuit consists of V-606B, 1/2 type 12AU7 tube. The audio output of the noise limiter circuit is coupled to the grid of V-606B. The output of this stage is developed across the cathode resistor, R-627 and is transmitted through shielded wire to the QUIETING and FREQUENCY RESPONSE controls.

2.12 Direction Finder Cathode Follower

Referring to Figure 4-3, the third i-f signal is detected by direction finder detector, V-607B, and the audio signal developed by this detector is coupled to the grid of V-606A by capacitor C-644. The output of this cathode follower stage is developed across cathode resistor R-628 and is transmitted to pin D of the AUXILIARY CONTROL connector.

2.13 AVC Detector and AVC Gate

Referring to Figure 4-4, the avc circuit consists of the avc detector V-604, type 6AL5W tube, and avc gate V-607A, 1/2 type 12AU7 tube, with associated circuit. Three controls on the front panel are associated with the avc circuit. These controls are AVC TIME CONSTANT switch, MAIN R-F GAIN control R-F GAIN switch (which is labelled LOCAL-AVC OFF-REMOTE). The purpose of the avc detector is to maintain the output of the receiver relatively constant for wide variations of signal input level. The purpose of the avc gate is to provide an avc voltage delay so that the weak signals will be able to come through with maximum amplification.

The two sections of the diode detector, V-604A and V-604B with associated circuit, form a voltage doubling circuit for the avc voltage. The cathode of V-604A is at about +6 volts due to bleeder current from the +200 volt supply through R-616 and R-615. This voltage is sufficient to keep V-607A cut off for low values of carrier signal strength and the gain of the r-f and i-f amplifiers will be determined by the setting of the R-F GAIN control R-1207. As the carrier level is increased the audio detector, V-604A (which is also a part of the avc circuit) develops an increasing negative voltage across its load (R-613 and R-614 paralleled by C-629). Likewise, the avc detector V-604B develops an increasing negative voltage across its load (R-618 paralleled by C-632). Since these two sections of the diode conduct on opposite halves of the cycle, the voltages developed across the two loads are in series and add. The combined voltage will appear at the plate of V-604B and the cathode of the avc gate V-607A. The grid of V-607A

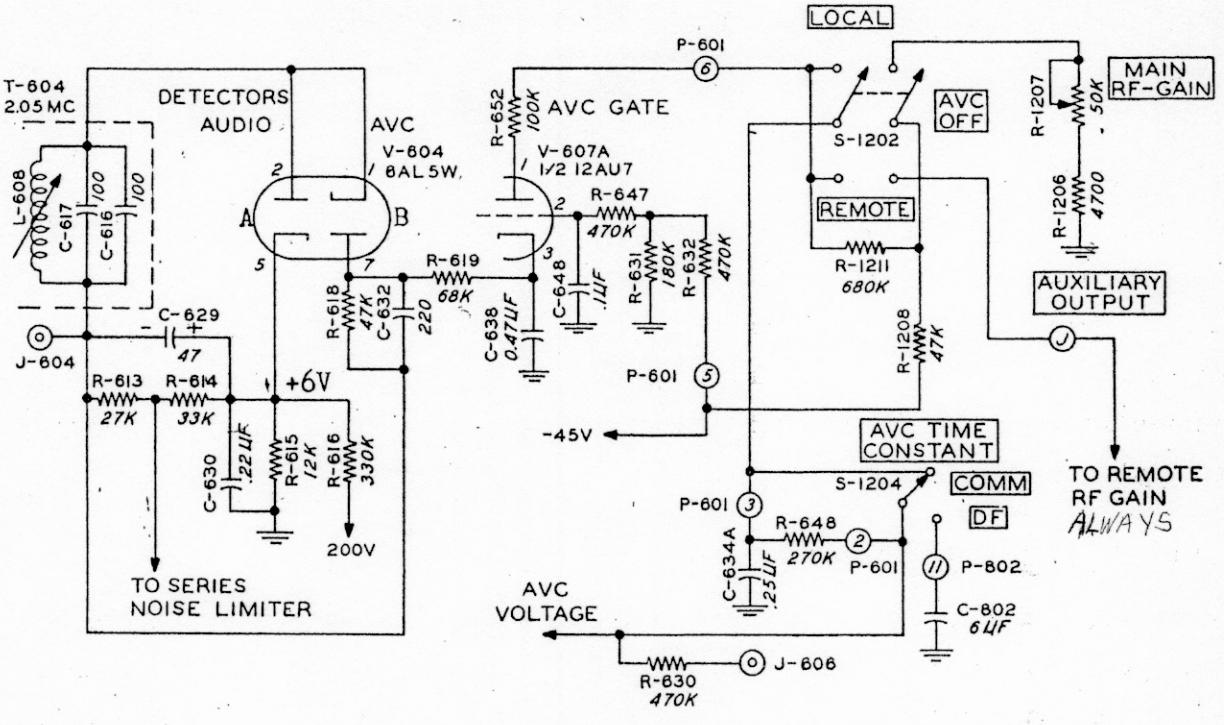

Figure 4-4. Avc Detector and Avc Gate

is at about -12 volts due to -45 volt bleeder current through R-632 and R-631. When sufficient input signal is applied, the cathode of V-607A will become sufficiently negative to cause the tube to conduct. The stronger the carrier signal, the more negative will be the cathode of V-607A, and the more it will conduct. The voltage drop across the plate load will cause the output avc voltage to become more negative, thereby decreasing the gain of the r-f and i-f amplifiers.

2.14 Remote R-F Gain Control

Referring to Figure 4-20, a remote R-F GAIN control may be used by connecting a 25,000 ohm potentiometer from pin J of the LOCAL CONTROL connector to ground.

2.15 AVC Time Constant

Referring to Figure 4-4, two time constants are provided by the AVC TIME CONSTANT switch, namely COMN (communication) position, which has a time constant of 0.1 second and DF (direction finder) position, which has a time constant of 2 seconds. With the MAIN R-F GAIN set to maximum, the avc voltage will vary from about -2 to -8 volts, depending on carrier signal strength.

2.16 Carrier-Operated Relay and Squelch Circuit

Referring to Figure 4-5, the receiver is provided with a carrier-operated relay, which is actuated by a two stage d-c amplifier that receives its control signal from the audio detector circuit. The circuits are designed so that the relay will be actuated whenever a carrier signal of sufficient amplitude (as determined by the setting of the MAIN R-F GAIN control) is received. The carrier-operated relay is provided with three sets of contacts as follows: s.p.s.t. contacts for operation of external equipment, s.p.s.t. contacts for operation of the MAIN CARRIER indicator lamp and s.p.d.t. contacts for operation of the audio squelch (silencing circuit). The carrier-operated relay circuit includes V-608A, 1/2 type 12AX7 tube, V-609, type 6C4 tube, and the carrier-operated relay, K-801. Two controls on the front panel, SQUELCH ON-OFF switch and QUIETING control are associated with the circuit.

A negative d-c voltage having audio frequency voltage superimposed is taken from the audio detector load and impressed on the grid of V-608A. Capacitor C-642 is an audio by-pass capacitor. The two stages of the circuit act as a one-kick multivibrator to assure positive activation of the carrier-operated relay.

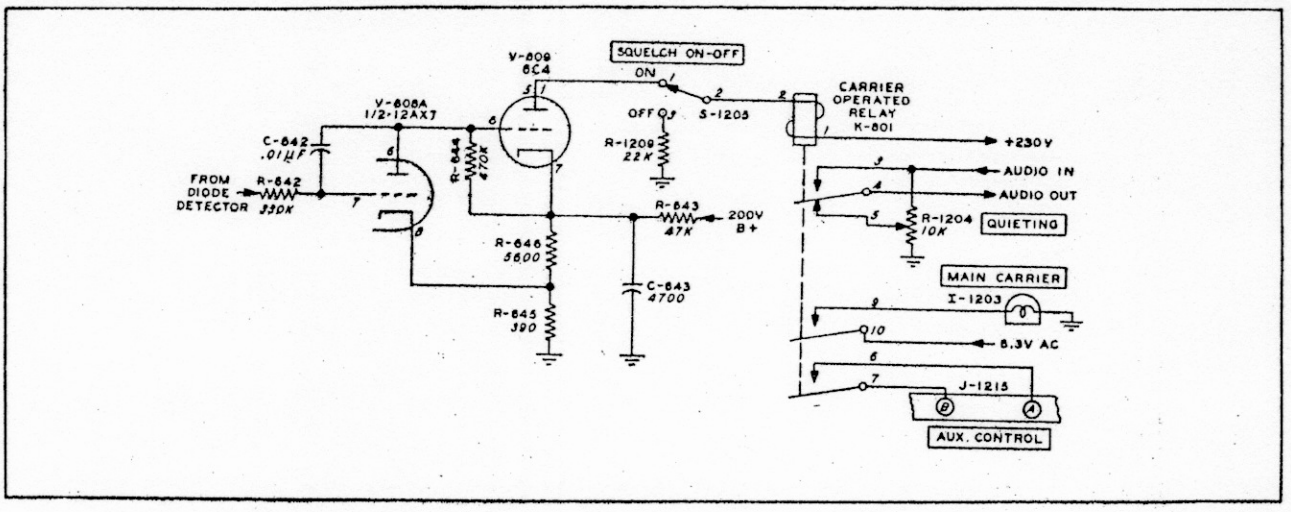

Figure 4-5. Carrier Operated Relay and Squelch Circuit

To understand the operation of the circuit, consider the case of a carrier signal being received after a period of no carrier input. With no carrier input (1) the diode detector tube, V-604, is not conducting, so there is no voltage developed across the diode load, R-613 and R-614 (see figure 4-3), (2) the voltage impressed on the grid of V-608A is about 6 volts as determined by the bleeder, R-616 and R-615, (3) V-608A is conducting, causing a voltage drop across R-644 which makes the grid of V-609 negative, and V-609 is virtually cut-off because of this biasing voltage. Now consider the reception of a carrier signal, (1) the grid of V-608A becomes negative because of the rectified voltage developed across the diode load, (2) current through V-608A decreases, (3) tube V-609 begins conducting because its grid is allowed to go positive, (4) cathode current of V-609 flowing through R-645 biases V-608A even more; this action being regenerative, V-608A is quickly cut off and (5) V-609 conducts to engerize the carrier-operated relay, K-801.

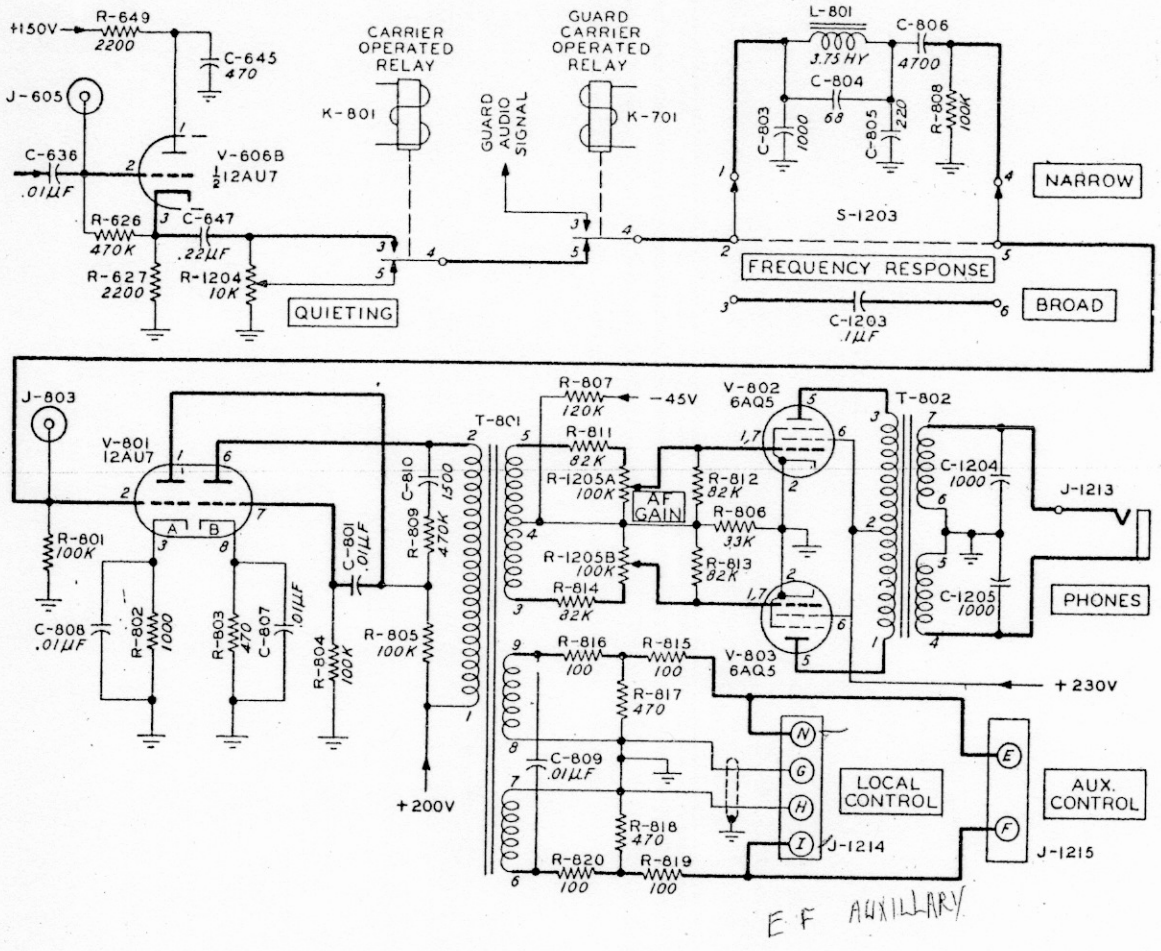

Figure 4-6. Audio Amplifier and Audio Controls

The carrier-operated relay, when activated, causes the MAIN CARRIER indicator lamp to be lighted, removes the QUIETING control from the audio amplifier circuit and provides facilities for operation of external equipment through pins on the AUXILIARY OUTPUT connector. With the SQUELCH switch in the ON position, operation of the carrier-operated relay is described above. In the OFF position, the carrier-operated relay remains actuated all times.

2.17 Audio Amplifier Circuits

Referring to Figure 4-6, the audio amplifier circuits includes a two stage amplifier, V-801, type 12AU7 tube, and push-pull amplifier V-802 and V-803, type 6AQ5 tubes. The audio signal controls consist of the QUIETING control, R-1204, the carrier-operated relay K-801, the audio bandwidth filter and the AUDIO GAIN control R-1205.

The audio signal developed at the cathode of V-606B passes through several audio control circuits before being applied to the grid of V-801. The purpose of the QUIETING control is to attenuate the receiver noise output any desired amount at the time no carrier signal is present. When a carrier signal of sufficient amplitude (as determined by the setting of the MAIN R-F GAIN control) is received the carrier-operated relay operates its contacts so that the audio signal by-passes the QUIETING control, goes through the audio bandwidth filter and to the grid of V-801. The audio FREQUENCY RESPONSE switch has two position, BROAD and NARROW. In the BROAD position capacitor C-1203 is switched into the circuit so that the 200 to 20,000 cps flat response characteristic of the receiver is employed. In the NARROW position the audio frequency response is limited to a narrow audio band as shown on page 4-5 of this chapter.

The audio signal from the bandwith control is amplified in the two-stage amplifier, V-801A and V-801B and impressed across the primary of the transformer T-801. Two of the secondary windings furnish a low level output for operation of external equipment. This level output appears at the LOCAL CONTROL and AUXILIARY CONTROL connectors. These two windings are ordinarily connected in series. The junction point (used as a center tap) may be connected directly to ground or the two leads may be individually by-passed to ground. The latter arrangement is provided for use with the "double simplex technique" in which a d-c control signal is carried over the same lines as are used for the audio signal. The other secondary winding of T-801 applies the signal through the AUDIO GAIN control, R-1205, to the grids of the push-pull amplifier stage consisting

of V-802 and V-803. The output of the push-pull amplifier appears across the output transformer T-802. A maximum of three watts output is available at the PHONES jack, J-1213 and at pins G and H of AUXILIARY CONTROL connector.

2.18 Power Supply Rectifier

Referring to Figure 4-7, the power supply rectifier consists of V-901, V-902 and V-903 working in conjunction with transformer T-901 to provide the plate supply, relay supply and bias supply. Transformer T-902 is used to provide the filament supply.

The receiver is energized by connecting power jack J-1216 to a source of 115 or 230 volt, 50 to 60 cycle power and turning on the POWER switch. The plate and filament transformers T-901 and T-902 employ dual winding primaries which are connected so that either 115 or 230 volt operation may be selected by operating switches S-901 and S-902, located on the power supply rectifier unit, to that position which agrees with the line voltage being used. When the POWER switch is turned on, the filament transformer, T-902, is instantly energized through fuse F-1202. A time delay of approximately 30 seconds provided by the thermal relay K-901 permits the rectifier filaments to reach operating temperature before the plate transformer is energized to apply plate voltage.

The rectifier section employing V-902, type 3B22 gas-filled rectifier, is a full-wave circuit which provides 115 volts d-c for the operation of the muting relay, K-802, and the various relays associated with the frequency selector mechanism. This section is connected in series with the full-wave rectifier section employing V-901, type 3B22 rectifier, to provide the plate supply for the operation of the receiver circuits. A half-wave rectifier, V-903, type 6X4W duo-diode, operates from the same secondary winding as V-902 to provide a negative bias supply voltage. Filament transformer T-902 is provided with a center-tapped-to ground 12.6 volt secondary winding, which provides filament voltage for the receiver, and two 2.5 volt secondary windings, which supply filament voltage for V-901 and V-902. To provide a 115 volt a-c supply

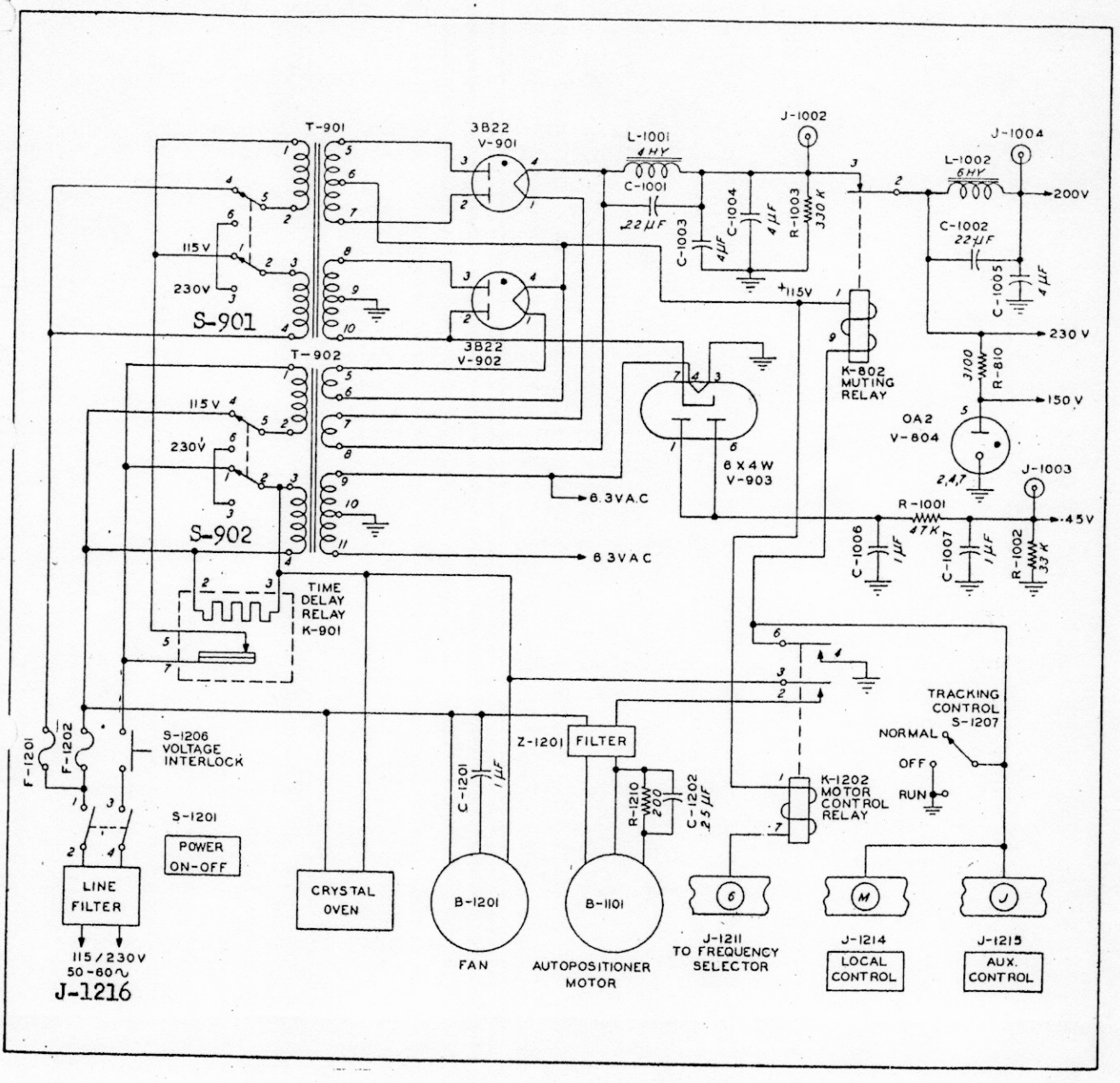

Figure 4-7. Power Supply and Control Circuits

for the operation of the thermal time delay relay, K-901, the blower motor B-1201, the frequency selector motor, B-1101, and the heater elements of the receiver crystal oven, the primary section of T-902 is employed as an autotransformer.

2.19 Power Supply Filter

Referring to Figure 4-7, the power supply filter is built up into three sections, the 230 volt section, the 200 volt section and the bias supply section. The 230 volt section is a choke input L section filter. The input choke, L-1001, is resonated with capacitor C-1001 at the second harmonic of the power frequency to supply additional filtering action. The 230 volt output of this filter section is led through the normally closed contacts of the muting relay, K-802, and back to the 200 volt filter section of the power supply filter where additional filtering occurs and the voltage is reduced to 200 volts. The bias supply filter section is a resistor-capacitor filter, the output of which is approximately -45 volts.

Voltage regulator tube V-804, type 0A2, which is located in the audio amplifier unit, may be considered as part of the power supply. This tube supplies a regulated 150 volt plate supply for the cathode follower circuits.

2.20 Muting Relay

Referring to Figure 4-7, the receiver is provided with a muting relay, K-802, whose principal function is to silence the receiver when used in conjunction with a transmitter. The relay is operated on 115 volts d-c and actuated by providing a ground connection to the relay coil. The muting relay can be actuated from an external source by grounding pin M of J-1214 or pin J of J-1215 and is automatically actuated whenever the frequency selector mechanism operates or whenever the tracking control switch S-1207 is set to off or Run. The muting relay interrupts the 230 volt plate supply.

3.0 FREQUENCY SELECTOR UNIT

The R-278B/GR receiver employs a frequency selector unit that automatically tunes the receiver. Physically, the frequency selector unit consists of two main parts. These two parts are the "pre-set panel"

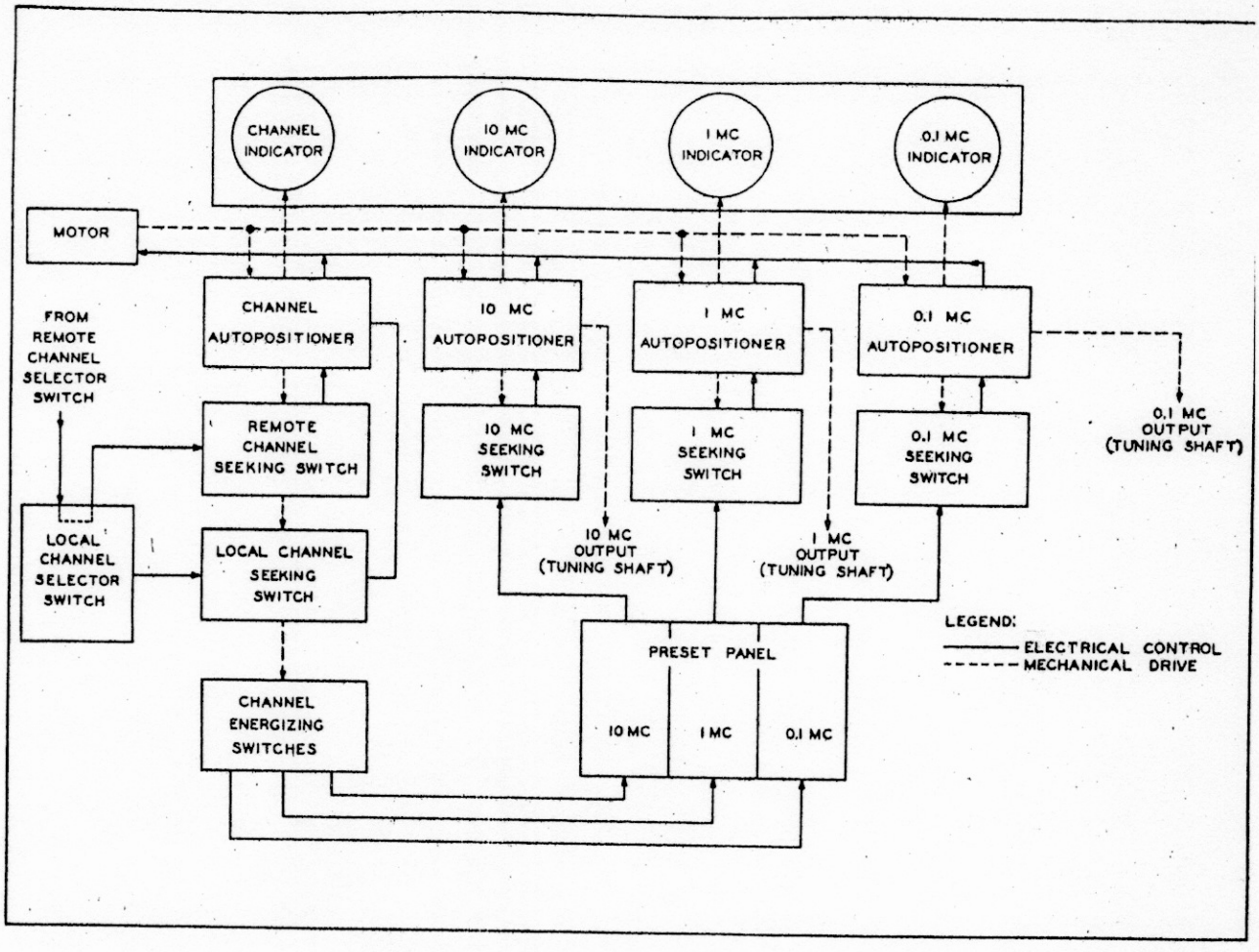

Figure 4-8. Block Diagram, Frequency Selector Unit

and the "autopositioner unit". (The frequency selector in the R-278B/GR receiver is identical to the frequency selector in the T-217A/GR transmitt and they are interchangeable). A block diagram of the frequency selector unit is shown in Figure 4-8 and the mechanical system is shown in Figure 4-13.

3.1 Pre-Set Panel

The receiver has eleven channels. The frequency of each channel is determined by the pre-set panel. The channel selector switch on the front panel of the receiver can be turned to any one of the eleven channels. Ten of the channels are numbered from 1 through 10. The eleventh channel is designated as the "manual" channel. When the channel selector switch is turned to any one of the eleven channels, the auto-positioner unit automatically tunes the receiver to the frequency that has been "set up" on the pre-set panel for that channel. There are three pre-set switches for each channel. The "tens" megacycle frequency is set up on the first switch, the "units" megacycle frequency on the second switch and the "tenths" megacycle frequency on the third switch. Since there are eleven channels there are eleven sets of pre-set switches. Referring to the schematic, Figure 4-19, the corresponding stator contacts of the first switch (10 mc) in each set are connected in parallel and the rotor contact of each switch connect to separate contacts on the 10 mc driven channel selector switch. The corresponding stator contacts of the second switch (1 mc) in each set are connected in parallel and the rotor contact of each switch connect to separate contacts on the 1 mc driven channel selector switch. Likewise, the corresponding stator contacts of the third switch (0.1 mc) in each set are connected in parallel and the rotor contact of each switch connect to separate contacts on the 0.1 mc driven channel selector switch.

In the lower right hand corner of the frequency selector unit schematic, Figure 4-19, the pre-set switches for the manual channel are shown. However, since there are eleven channels, there are 33 of these rotary switches in the pre-set panel. There is a knurled knob on each of the 33 pre-set switches. The frequencies are "set-up" by turning the knurled knobs until they indicate the desired frequency. For example, if 390.0 mc is desired on channel 2, the knurled knobs for channel 2 are turned until they indicate this frequency. The knurled knob on the first (10 mc) pre-set

switch is turned until 39 is indicated on the knob, the knurled knob on the second (1 mc) switch is turned until 0 is indicated on the knob and the knurled knob on the third (0.1 mc) switch is turned until .0 is indicated on the knob. When the channel selector switch is turned to channel 2 the receiver will automatically tune to 390.0 mc.

3.2 Autopositioner Units

The frequency selector unit employs four relay-controlled devices known as autopositioners. An autopositioner is a motor-driven mechanism which will position a shaft to any one of a number of fixed positions. These four autopositioners are called the 10 mc autopositioner, the 1 mc autopositioner, the 0.1 mc autopositioner and the channel selecting autopositioner. The 10 mc autopositioner tunes the receiver in 10 mc steps, the 1 mc autopositioner tunes the receiver in 1 mc steps, the 0.1 mc autopositioner tunes the receiver in 0.1 mc steps and the channel selecting autopositioner turns the driven channel selector switches, which in turn select the proper set of pre-set switches. The shaft of each autopositioner unit is connected through a slip clutch to a common shaft, which in turn is connected through a set of gears to a motor.

Referring to the frequency selector unit schematic, Figure 4-19, the OUTPUT shaft of the 10 mc, 1 mc, and 0.1 mc autopositioners tune the receiver. All four autopositioners turn a SEEKING switch and an INDICATOR dial. On each output shaft there is a notched stop wheel, which is held in position by a pawl. When the autopositioner relay is energized, the pawl releases the stop wheel and contacts on the relay closes the motor control circuit. For a complete tuning cycle, the 10 mc autopositioner output shaft makes 6 revolutions, the 1 mc autopositioner output shaft makes 2 revolutions, and the 0.1 mc autopositioner output shaft makes 1 revolution. Actually, the tuning could be performed by only 1 revolution of the output shaft of each autopositioner, because the shafts in the tuning units make 1 revolution for a complete tuning cycle. However, the torque would be too great on the slip-clutches of the 10 mc and 1 mc autopositioners, due to the fact that the load on these shafts is greater than the load on the shaft of the 0.1 mc

autopositioner. All shafts turn in one direction only, so a complete tuning cycle is when the receiver is tuned, starting at any frequency, and goes through all frequencies returning to the starting frequency.

3.3 Operation of the Tenth Megacycle Autopositioner

The output shaft of the 0.1 mc autopositioner tunes the receiver in 0.1 mc steps from XXX.0 to XXX.9 mc. In the tenth magacycle autopositioner, only the tenth mc part of the frequency is changed, therefore the other parts of the frequencies are shown in this discussion as an X. Since the above tuning would be 10 steps, it is necessary to stop the output shaft at 10 different positions, because the output shaft makes 1 revolution for a complete tuning cycle. The seeking switch S-1106 also makes 1 revolution for a complete tuning cycle, so it is driven directly by the output shaft. The notched stop wheel on the output shaft has 12 notches to correspond to the 12 positions of the seeking switch S-1106, however only 10 of these positions are used. The output shaft and the seeking switch turn in steps of 30 degrees when going from XXX.9 to XXX.0 mc, but the step from XXX.0 to XXX.9 mc is 90 degrees. This 90 degree step allows the tuning mechanism to return to the starting point of the tuning range, which is XXX.9 mc for the 0.1 mc part of the frequencies.

The 0.1 mc autopositioner is operated by the autopositioner relay K-1104. The left hand terminal of the relay winding has +115 volts d-c on it, supplied from terminal 12 of P-1101. The negative side of the power supply is grounded. Therefore, to energize the relay, a ground is needed on the right hand terminal. This ground is provided through the seeking switch S-1106, through one of the pre-set switches S-1129 through S-1139, through the DRIVEN CHANNEL selector switch S-1102E, then to terminal 5 of P-1101 which is grounded. When the ground circuit is completed, the relay K-1104 is energized, which pulls the pawl away from the stop wheel. At the same time, contacts on the relay close the motor control circuit and the output shaft starts turning. The other set of contacts places a resistance of 310 ohms in series with the relay winding after the relay is energized. This resistance limits the current through the relay winding. The output shaft will turn until the notch in the seeking switch S-1106 reaches the stator contact through whicl

the ground was provided. The ground is provided through only one of the stator contacts on the seeking switch. The stator contact that provides the ground depends upon the setting of the pre-set switch. When the notch in the seeking switch reaches the stator contact through which the ground was provided, the circuit to the relay winding will be opened, the relay will be de-energized, the pawl will be pulled by a spring and engage a notch in the stop wheel. The contacts for the motor control circuit will open, allowing the motor to stop. The purpose of the slip-clutch is to allow the stop wheel to stop in case the motor control circuit is still closed through the contacts on one of the other autopositioner relays.

Remember, that even though the corresponding stator contacts of the eleven pre-set switches S-1129 through S-1139 are connected in parallel, the rotor contact of each pre-set switch goes to separate contacts on the 0.1 mc driven channel selector switch S-1102E. The rotor of only one of the pre-set switches is grounded through the driven channel selector switch. The rotor that is grounded depends upon the position of the driven channel selector switch, whose position depends upon the channel selected. The rotor of the driven channel selector switch S-1102E is grounded through terminal 5 of P-1101. Therefore, the rotor of switch S-1102E puts a ground on one of the eleven stator contacts of S1102E. The eleven stator contacts on S-1102E are for the eleven channels. The way in which the driven channel selector switch is positioned to the desired channel will be discussed when the operation of the channel selecting autopositioner is described.

3.4 Operation of the Unit Megacycle Autopositioner

The output shaft of the 1 mc autopositioner tunes the receiver in 1 mc steps from XX0.X to XX9.X mc. In the 1 mc autopositioner, only the unit megacycle part of the frequency is changed. The output shaft makes 2 revolutions for a complete tuning cycle. The seeking switch S-1105 makes 1 revolution for a complete tuning cycle, so it is driven by the output shaft through a 2:1 gear ratio. Since the output shaft makes 2 revolutions while

the seeking switch makes 1 revolution, only 6 notches are needed on the stop wheel to correspond to the 12 positions of the seeking switch.

Other than the fact that the output shaft makes two revolutions for a complete cycle of tuning, the operation of the Unit Megacycle Autopositioner is identical to the operation of the Tenth Megacycle Autopositioner. The seeking switch is S-1105, the pre-set switches are S-1118 through S-1128, and the driven channel selector switch is S-1102D. The seeking switch turns in steps of 30 degrees when going from XX9.X to XX0.X mc, but the step from XX0.X to XX9.X mc is 90 degrees. This 90-degree step allows the tuning mechanism to return to the starting point of the tuning range, which is XX9.X mc for the 1 mc part of the frequencies. Since the output shaft makes 2 revolutions while the seeking switch makes 1 revolution, the output shaft turns in steps of 60 degrees, the last step being 180 degrees.

3.5 Operation of the Ten Megacycle Autopositioner

The output shaft of the 10 mc autopositioner tunes the receiver in 10 mc steps from 22X.X to 39X.X mc. In the 10 mc autopositioner, only the 10 mc part of the frequency is changed. Since most of the 10 mc tuning is by means of variable capacitors, only 3 revolutions of the output shaft are used for tuning, while the other 3 revolutions are used to return the capacitors to their starting point. Remember, that all shafts turn in only one direction. Since the above tuning would be 18 steps, it is necessary to stop the output shaft at 6 positions for each of the first 3 revolutions. There are 6 notches on the stop wheel to correspond with the 6 positions for each revolution. The output shaft turns in steps of 60 degrees for the first 3 revolutions, while the last step would be 3 revolutions (1080 degrees).

The seeking switch is not as simple as the seeking switch for the 1 mc and 0.1 mc autopositioners. If an 18 position switch could be used, then the operation would have been similiar to the operation of the 1 mc and 0.1 mc

seeking switches. However, a two-section switch is used, with 12 positions on each switch. Only 9 positions in each section is used to give the required 18 positions. In order to use a two section switch, it is necessary to use a blanking switch. The seeking switch is S-1103, with one section being shown as S-1103A and the other section as S-1103B. The blanking switch is shown as S-1104. Since the output shaft stops at 6 positions for each of the first 3 revolutions of the output shaft, it would stop at 9 positions for the first 1 1/2 revolutions (540 degrees). These 9 positions are controlled by the "A" section of the seeking switch. The blanking switch S-1104 keeps the "B" section shorted during this time. Since the output shaft drives the seeking switch through a 2:1 gear ratio, the seeking switch turns 270 degrees during the first 1 1/2 revolutions of the output shaft. Section "B" of the seeking switch controls the 9 positions for the second 1 1/2 revolutions of the output shaft. The blanking switch S-1104 keeps the "A" section shorted during this time. When the output shaft has turned through all 18 positions (3 revolutions), the seeking switch has turned through 1 1/2 revolutions (540 degrees). During the remaining 3 revolutions of the output shaft, which returns the capacitors to their starting point, the seeking switch turns through 1 1/2 revolutions. The blanking switch shorts both sections of the seeking switch during this time. In other words, when the output shaft makes 6 revolutions, the seeking switch makes 3 revolutions, and during the 3 revolutions of the seeking switch the blanking switch shorts the "B" section during the first 270 degrees, shorts the "A" section during the second 270 degrees and shorts both sections during the remaining 540 degrees. The blanking switch makes 1 revolution during this time.

The "A" section of the seeking switch controls the 9 positions from 39X.X to 31X.X mc. The "B" section controls the 9 positions from 30X.X to 22X.X mc. The driven channel selector switch for the ten megacycle autopositioner is S-1102C. The circuit from the seeking switches to the 10 mc autopositioner relay K-1102 goes through a tracking control switch connected to terminals 13 and 14 of P-1101. Normally, the circuit is closed between these two terminals.

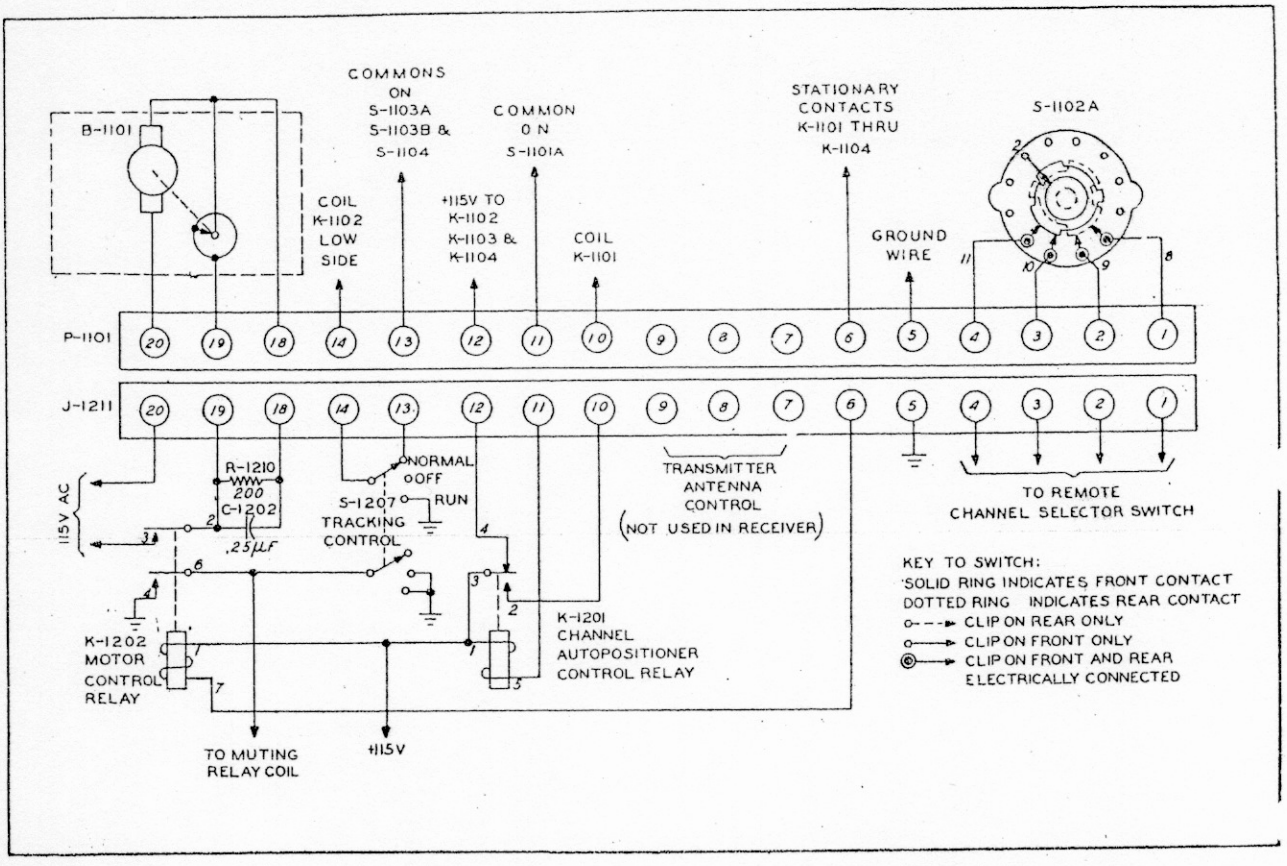

Figure 4-9. External Connections of Frequency Selector Unit.

3.6 Operation of the Channel Selecting Autopositioner

Instead of positioning tuning shafts, as is done in the other three autopositioners, the channel selecting autopositioner positions the shaft of the three driven channel selector switches, S-1102C, S-1102D and S-1102E. These three driven channel selector switches provide a ground on the rotor of the desired set of pre-set switches. In this autopositioner, the relay K-1101 has its right hand terminal grounded and the relay operation is controlled in the +115 volt d-c circuit, which is connected to the left hand terminal of the relay. When the +115 volt d-c circuit is closed to the channel selecting autopositioner, it is opened to the relays of the other three autopositioners. The reason for this is to keep the tuning

autopositioners from operating until the channel selecting autopositioner has positioned the driven channel selector switches. In other words, the channel selecting autopositioner completes its function before the other three autopositioners start their function. The channel selecting autopositioner has two seeking switches, S-1102A and S-1102B. S-1102B is used when the channels are selected by the local channel selector switch on the front panel of the receiver. S-1102A is used when the channels are selected by the remote channel selector switch. When the remote channel selector switch is used, the local channel selector switch must be placed in the remote position.

3.7 Local Channel Selection

Figure 4-9 shows the control circuit which is external to the frequency selector unit but directly associated with it. Referring to Figures 4-9 and 4-19, note that S-1101B has no function in the receiver, but is included to make the receiver frequency selector unit interchangeable with that of the transmitter.

The seeking switch S-1102B controls the operation of the channel autopositioner control relay K-1201, which in turn controls the +115 volts d-c to the autopositioner relays. Relay K-1201, which is shown in Figure 4-9, is normally de-energized and in this position allows +115 volts d-c to be applied to terminal 12 of P-1101, which in turn connects to the three tuning autopositioners. When relay K-1201 is energized, the d-c voltage is removed from terminal 12 of P-1101 and is applied to terminal 10 of P-1101, which in turn connects to the channel selecting autopositioner relay K-1101. The operation of relay K-1201 is controlled by the seeking switch S-1102B. This relay has +115 volts d-c connected to one side of its winding. The other side connects to terminal 11 of P-1101. Then, to energize this relay, a ground is needed on terminal 11 of P-1101. The ground is supplied through the rotor of the local channel selector switch S-1101A, then through one of its stator contacts, then through the corresponding stator contact on the seeking switch S-1102B, then through

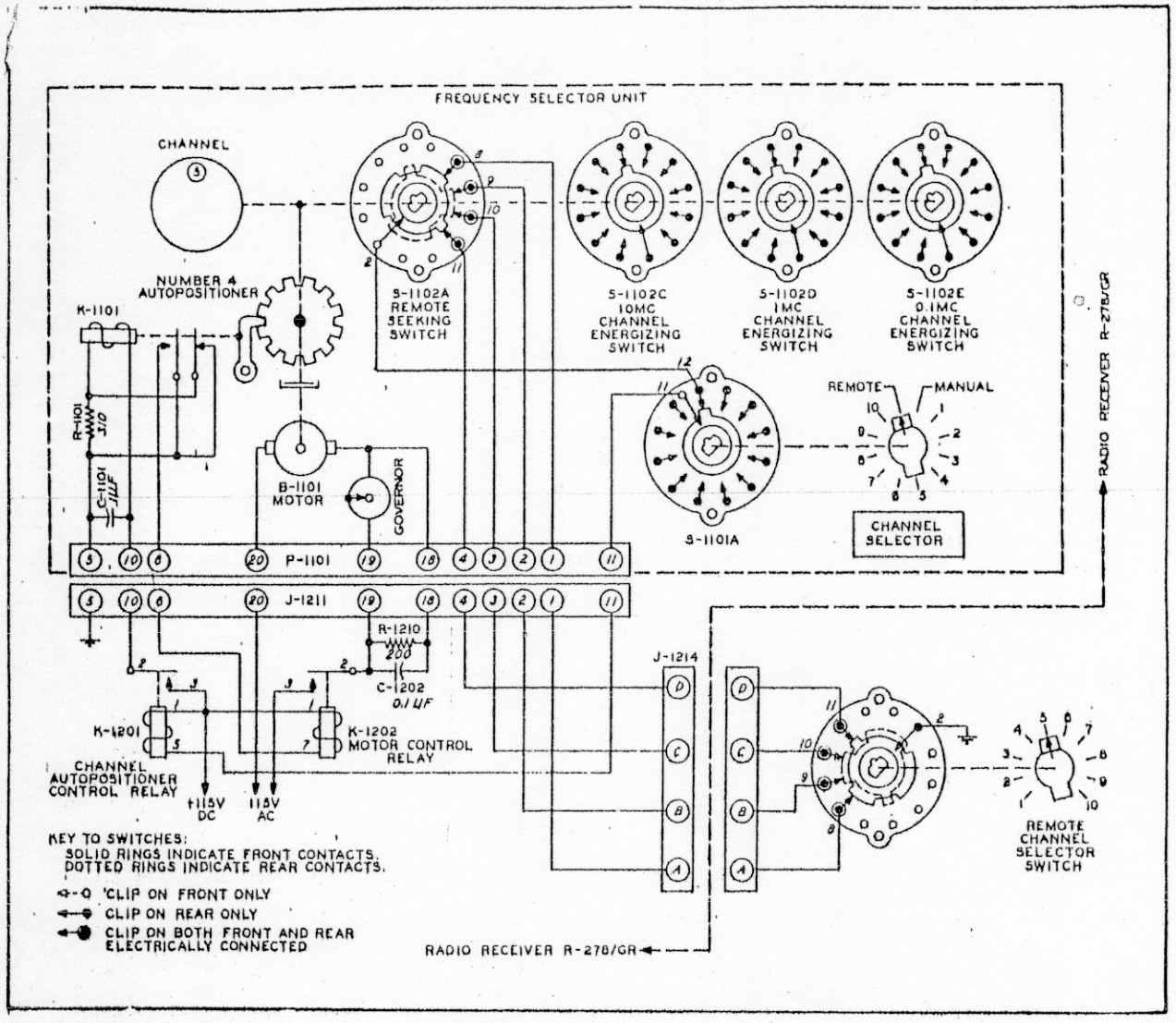

Figure 4-10. Remote Control of Frequency Selector Unit

the rotor contact of the seeking switch to ground. The stator contact of S-1101A through which the ground is supplied depends upon the position of S-1101A. When the notch in the seeking switch S-1102B reaches the stator contact through which the ground is supplied, the ground to K-1201 will be removed. Relay K-1201 will be de-energized and the +115 volts d-c will be removed from the channel selecting autopositioner relay and transferred to the relays of the other autopositioners.

Since the seeking switch and the driven channel selector switches are on the autopositioner shaft, the driven channel selector switches will be positioned for the selected channel.

3.8 Remote Channel Selection

Referring to Figure 4-10, the remote channel selector switch has only 10 positions. The manual channel can not be selected from the remote position. For remote channel selection, the local channel selector is turned to the remote position. The ground for the channel autopositioner control relay K-1201, is now supplied to terminal 11 of P-1101 through the rotor of S-1101A, through the stator contact of S-1101A, through the remote seeking switch S-1102A, through 4 wires that connect to the remote channel selector switch, then through the remote channel selector switch to ground.

In order to use a system of 4 wires and a ground to select 10 channels, special rotary type switches are used. Referring to Figure 4-12, each switch consists of two rotor blades mounted on opposite sides of the switch rotor and insulated from each other. Referring to the table in Figure 4-12, ten combinations of connections for the 4 wires are set up as the remote channel selector switch is rotated. The rotor contact of the remote channel selector switch makes contact with the front rotor blade, while the rotor contact of the remote seeking switch S-1102A makes contact with the rear rotor blade. At each position of the switches, the wires are always making contact with either the front or rear rotor blades, but never make contact to both at the same time. The circuit to the relay is open only when the two switches have the same position, therefore when the remote channel selector switch is turned, the relay will be energized and the remote seeking will turn until it reaches the same position as that to which the remote channel selector switch was turned.

This system of 4 wires and a ground can also be explained by referring to Figure 4-11, in which a system of single-pole double-throw switches are used. As shown, each seeking switch is in the same position as the corresponding remote switch and the circuit to the relay is open. When any one of the remote switches is thrown to a different position, the relay

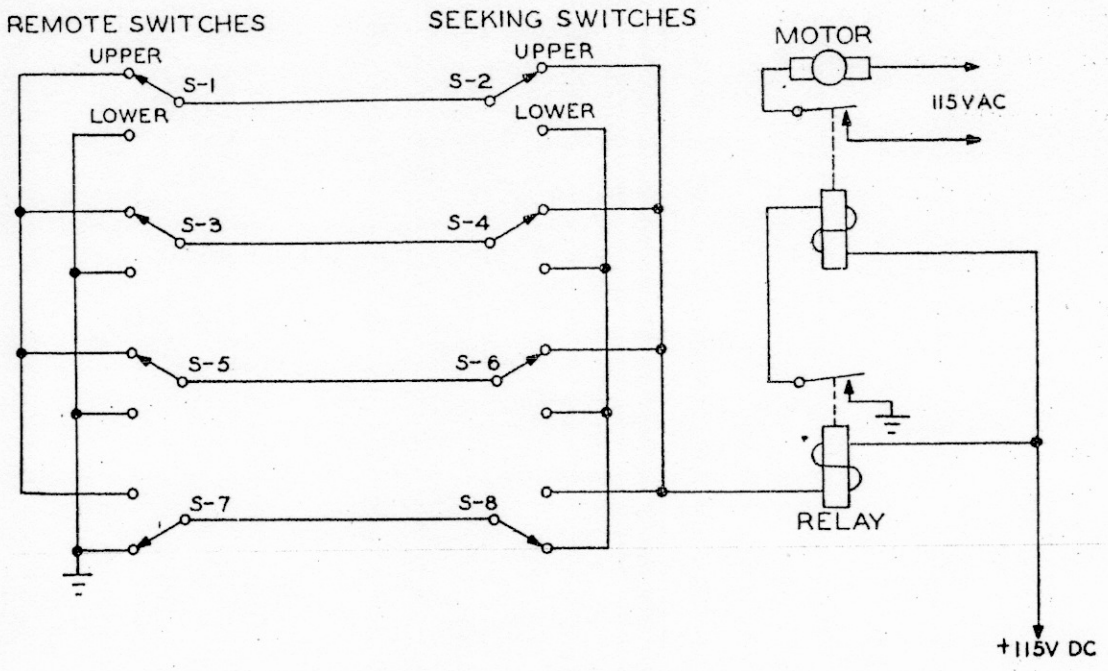

Figure 4-11. Basic Diagram of Binary Control System

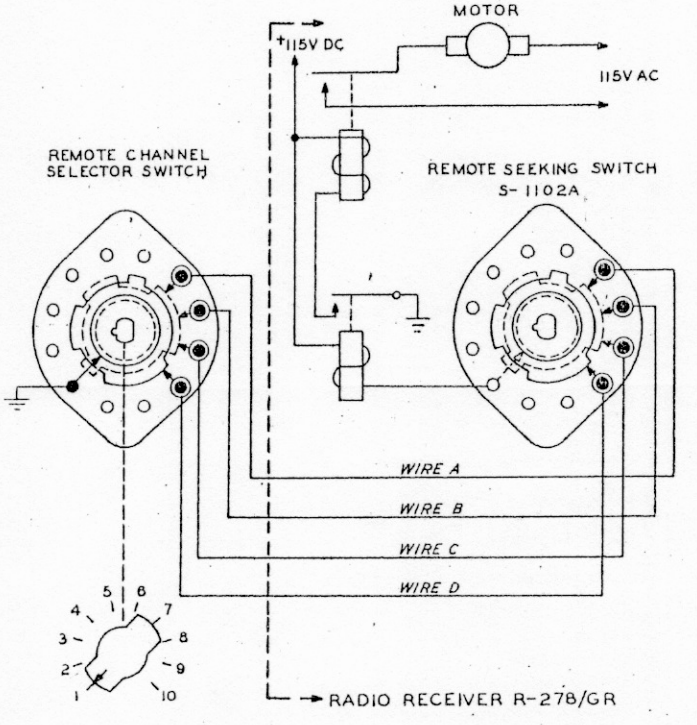

CHANNEL	WIRE			
	A	B	C	D
1				X
2	X			
3		X		
4			X	
5	X			X
6	X	X		
7		X	X	
8	X		X	X
9	X	X		X
10	X	X	X	

INDICATES WIRE GROUNDED IN REMOTE CHANNEL SELECTOR SWITCH

NOTE:
SOLID RINGS INDICATE FRONT CONTACTS
DOTTED RINGS INDICATE REAR CONTACTS

KEY TO SYMBOLS:
FRONT CLIP
REAR CLIP
FRONT & REAR CLIPS

Figure 4-12. Channel Coding of Remote Selector Switches

4.0 MECHANICAL DRIVE SYSTEM FOR RECEIVER TUNING

The frequency selector unit mechanically drives the tuning mechanism of the following units: Second I-F Amplifier, First I-F Amplifier, Main Oscillator, Frequency Multiplier-Amplifier, and R-F Amplifier.

4.1 Frequency Selector Unit Mechanical Drive

Referring to Figure 4-13, the motor B-1101 is energized at a time when one or more autopositioner pawls have lifted from their stop-wheels. The following is a typical operation:

The channel autopositioner becomes energized so that its pawl releases the stop wheel and a set of contacts energized the motor; the motor drives the four clutch plates through a series of gears; only the channel autopositioner shaft turns. All other clutches slip, since their pawls lock the stop-wheels; the channel indicator and channel switches set up, which action energizes the other three autopositioners; the channel autopositioner pawl engages its stop-wheel and the other three pawls release their stop-wheels; the motor drives the three frequency determining autopositioners through their clutches; the 0.1 mc autopositioner uses a direct drive output and the indicator dial is geared 1:1 to the output shaft; the 1 mc output uses a gear ratio of 2:1 to drive the 1 mc indicator dial and a gear ratio of 2:1 to drive the 1 mc shafts (see figure 4-14). Therefore, the 1 mc autopositioner must make two complete revolutions to complete a tuning cycle; the 10 mc autopositioner is geared to the tuning mechanism in such a way that six complete revolutions of the 10 mc autopositioner are required to complete a tuning cycle. Seeking switches S-1103A and S-1103B make three revolutions, blanking switch S-1104 one revolution and the 10 mc indicator dial two revolutions.

4.2 Second I-F Amplifier Unit Tuning

Referring to Figure 4-14, the second i-f amplifier has one mechanical input, that from the 0.1 mc autopositioner shaft. The gearing ratio is 1:1, so that one revolution of the 0.1 autopositioner shaft effects a complete tuning cycle

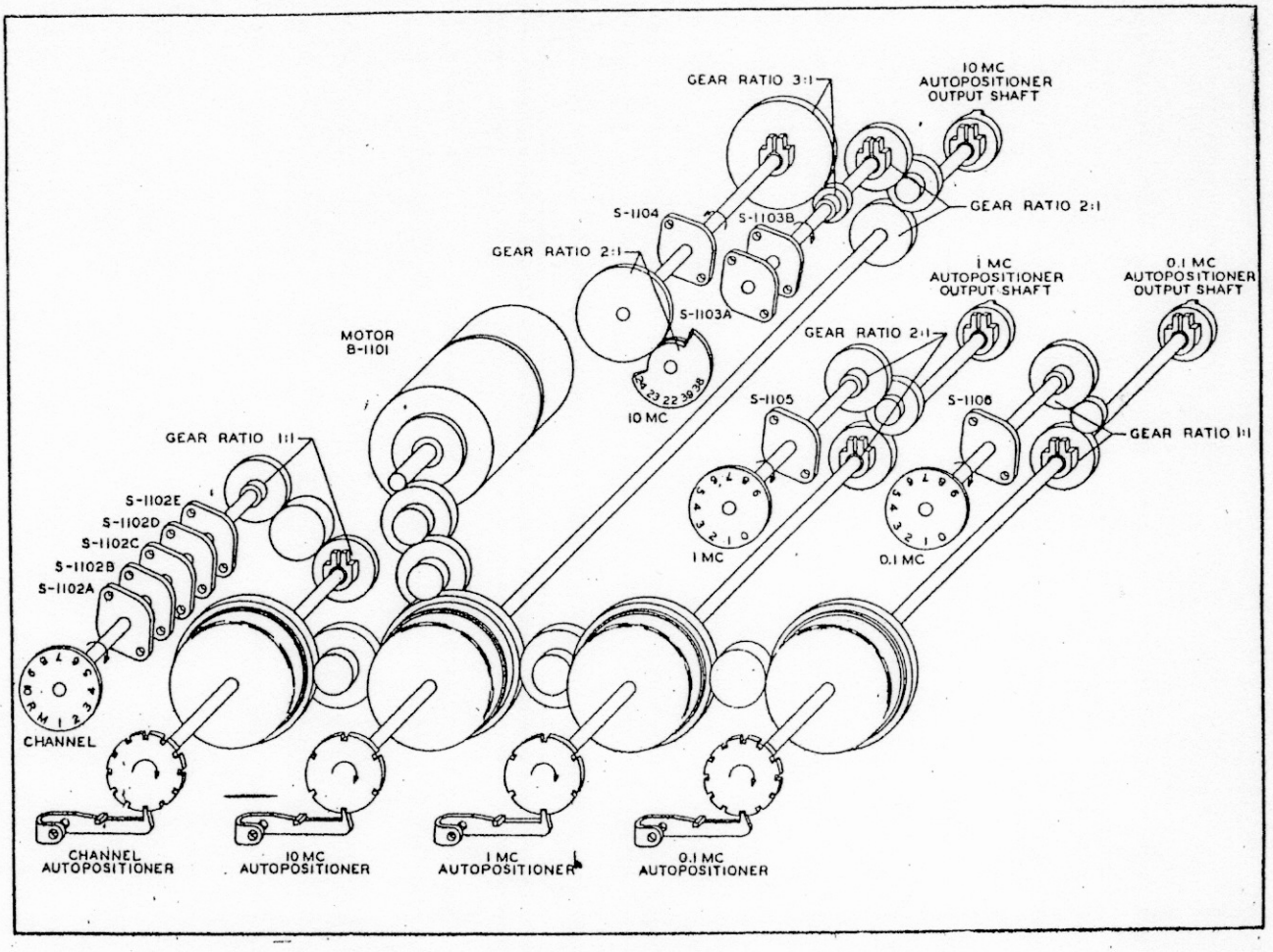

Figure 4-13. Frequency Selector Unit, Mechanical Drive System

of the second i-f amplifier. Two cams mounted on the tuning shaft of the second i-f amplifier turn 270 degrees to raise the tuning-core table from its lowest to its highest position to permeability tune the primaries and secondaries of T-501 and T-502. The remaining 90 degrees of cam travel allows the tuning rack to drop to its lowest position, which represents the highest tuning frequency. A rotary crystal-selector switch, having ten active positions in 270 degrees, is mounted on the end of the tuning shaft to select the proper third oscillator crystal unit for the receiver frequency selected.

4.3 First I-F Amplifier Unit Tuning

The first i-f amplifier unit receives two mechanical inputs on two parallel tunning shafts. The input from the 0.1 mc autopositioner is geared 1:1 through an idler gear and the input from the 1 mc autopositioner is geared 2:1 since the 1 mc autopositioner makes two revolutions for one tuning cycle.

The i-f transformers, T-401 and T-402, are permeability-tuned by a differential tuning core table which combines the inputs from the 1 mc and the 0.1 mc autopositioners to provide 100 tuning steps. The cams mounted on the floating 1 mc tuning shaft position the tuning core table in ten steps similiar to the tuning of the second i-f amplifier. The cams mounted on the 0.1 mc tuning shaft displace this 1 mc tuning shaft in 10 steps.to provide a vernier adjustment of the tuning core table position. The Oldham-type sliding coupler permits the floating 1 mc tuning shaft to be thus displaced.

The tuned circuits associated with the second oscillator are permeability tuned in 10 steps by a tuning core table positioned by means of two cams mounted on the fixed-bearing 1 mc tuning shaft. The crystal-selector switch of the second oscillator is operated from the fixed-bearing 1 mc tuning shaft through an idler gear.

4.4 Main Oscillator Unit Tuning

The main oscillator unit crystal-selector switch and coil-selector switch are driven from the 10 mc autipositioner shaft through a 3:1 gear reduction. Since the 10 mc autipositioner shaft makes six revolutions per tuning cycle, these selector switches make two complete revolutions per cycle. The first revolution provides 18 rotor positions for the selection of the proper crystal and coil for the selected receiver frequency. The second revolution occurs at the time the tuners of the frequency multiplier-amplifier and the r-f amplifier of the frequency mulitplier-amplifier are in the unused 180 degrees of their tuning cycle.

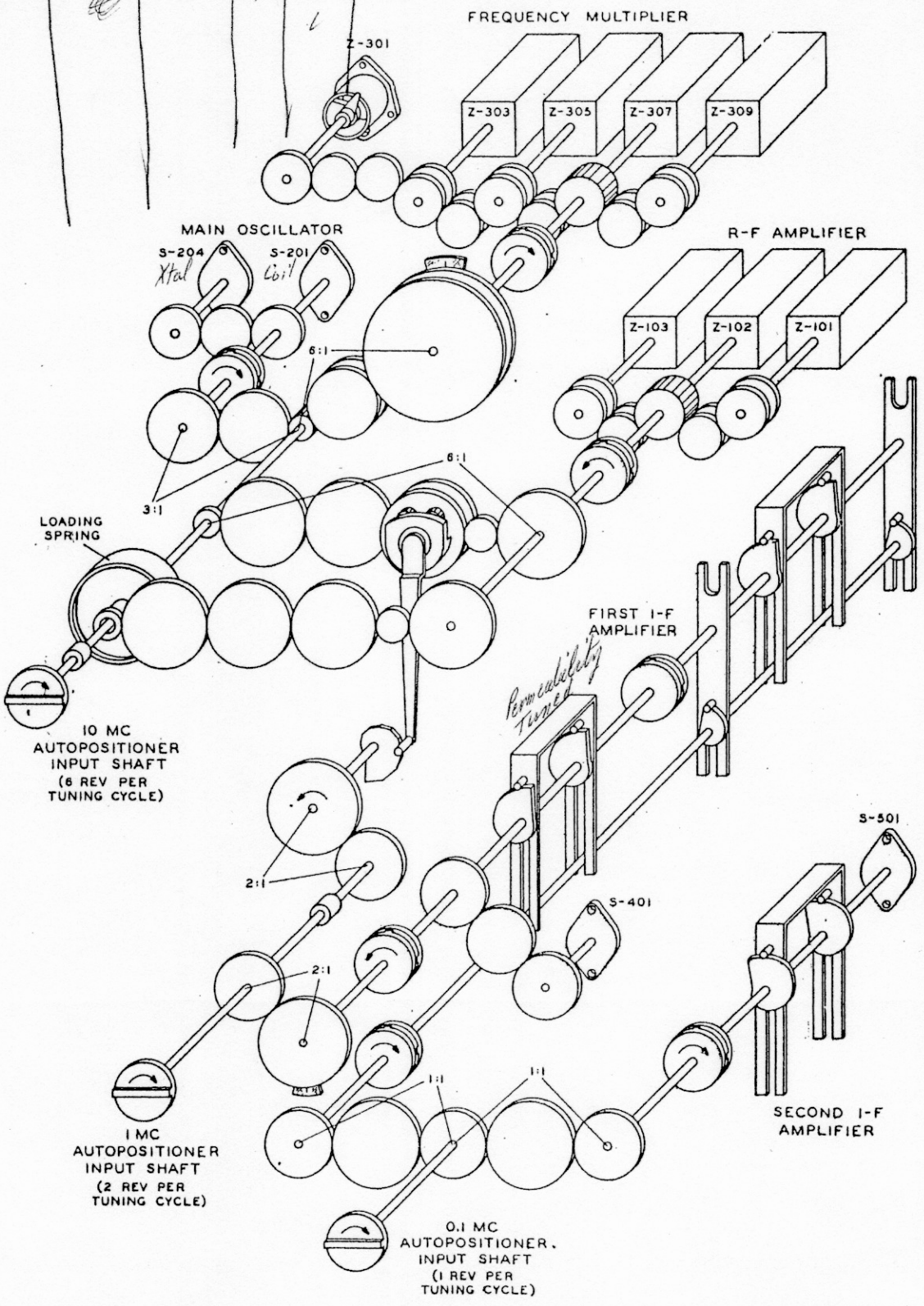

138/4
2/58

Figure 4-14. Receiver Tuning, Mechanical Drive System

4.5 Frequency Multiplier-Amplifier Unit Tuning

The tuning shaft of the frequency multiplier-amplifier is driven by the 10 mc autopositioner shaft through two stages of gear reduction which provide a speed reduction of 6:1. Thus, the tuners make 1 revolution per tuning cycle. The first 180 degrees of rotation provide the 18 operating positions of the tuners. The second 180 degrees of rotation return the tuners to the beginning point of their cycles. The gears employed in the reduction drive are of the split spring-loaded type to reduce possible inaccuracy due to backlash.

The tuners of the frequency multiplier are driven by the tuning shaft through a system of spur gears which, with the exception of the gears driving the toroidal step tuner, are also of the split spring-loaded type.

4.6 R-F Amplifier Unit Tuning

The r-f amplifier tuning shaft is driven from the 10 mc autopositioner shaft through a gearing system which includes a planetary-type differential in which the tuning information provided by the 10 mc autopositioner shaft is combined with tuning information provided by the 1 mc autopositioner shaft to provide 180 operating positions of the r-f amplifier tuners. The 1 mc input is accomplished by a rocker arm driving a pinion of the planetary gear system. This rocker arm is actuated by a cam driven from the 1 mc autopositioner shaft. This cam has its periphery radius-stepped, so that the rocker arm always rides on circle segments with increasing radius as the frequency increases from the zero position through the nine positions.

The driving gears provide a 3:1 speed reduction from the 10 mc autopositioner shaft and an additional 2:1 reduction is obtained in the differential mechanism. Thus the tuning shaft makes 1 revolution per tuning cycle to provide 18 primary tuning positions each of which is divided into 10 steps as determined by the setting of the 1 mc autopositioner shaft operating through the differential mechanism. Thus 180 positions covering 180 degrees rotation are provided. The tuning shaft is coupled back to the 10 mc autipositioner shaft through a system of loading gears and a helical spring to provide spring-loading of the entire gear train. The r-f amplifier tuners are driven by the tuning shaft through a system of spur-gears employing split spring-loaded gears.

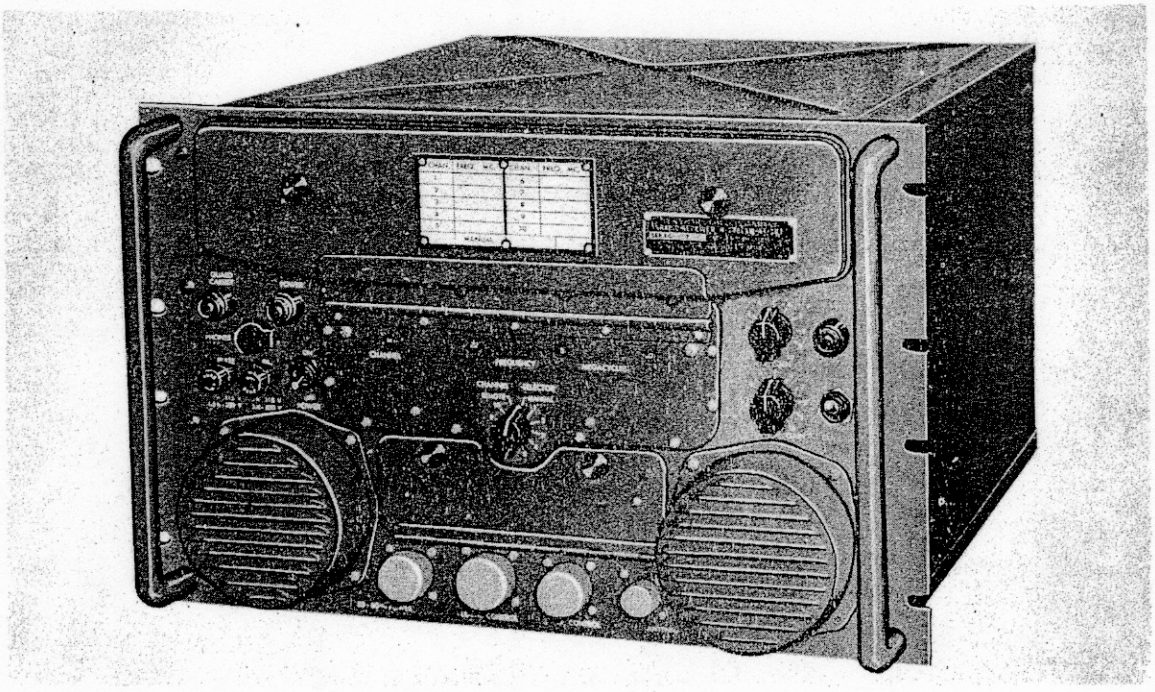

Figure 4-15. Radio Receiver R-278/GR

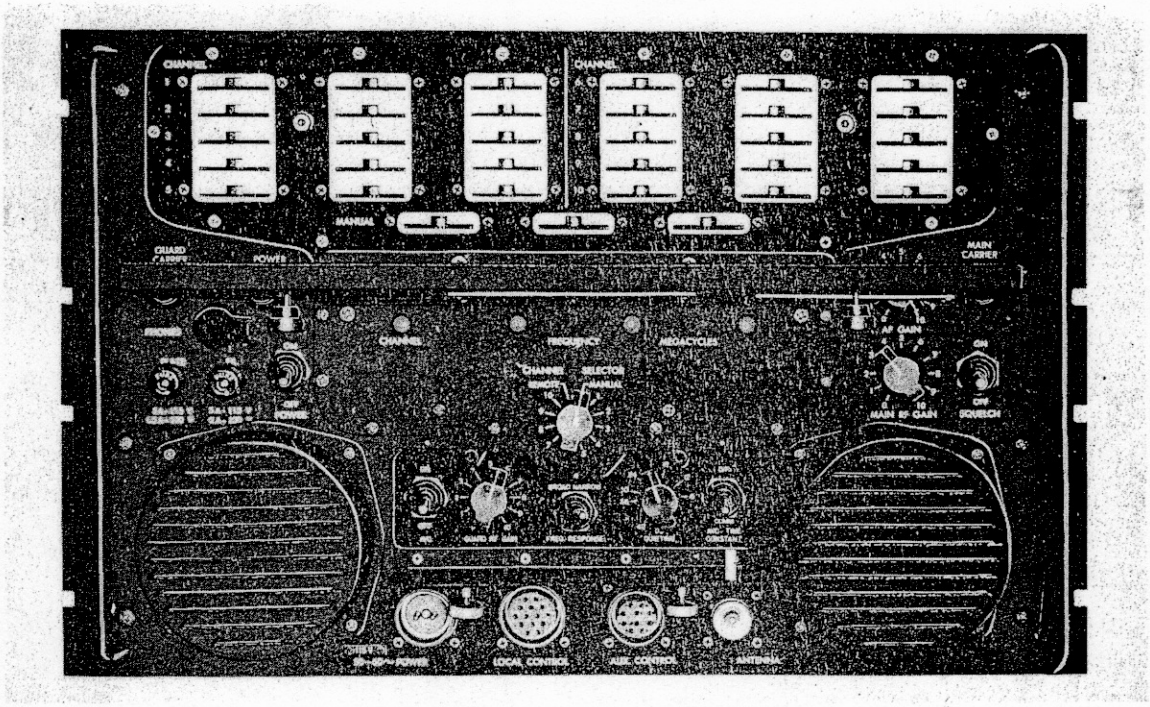

Figure 4-16. Radio Receiver R-278/GR, Controls

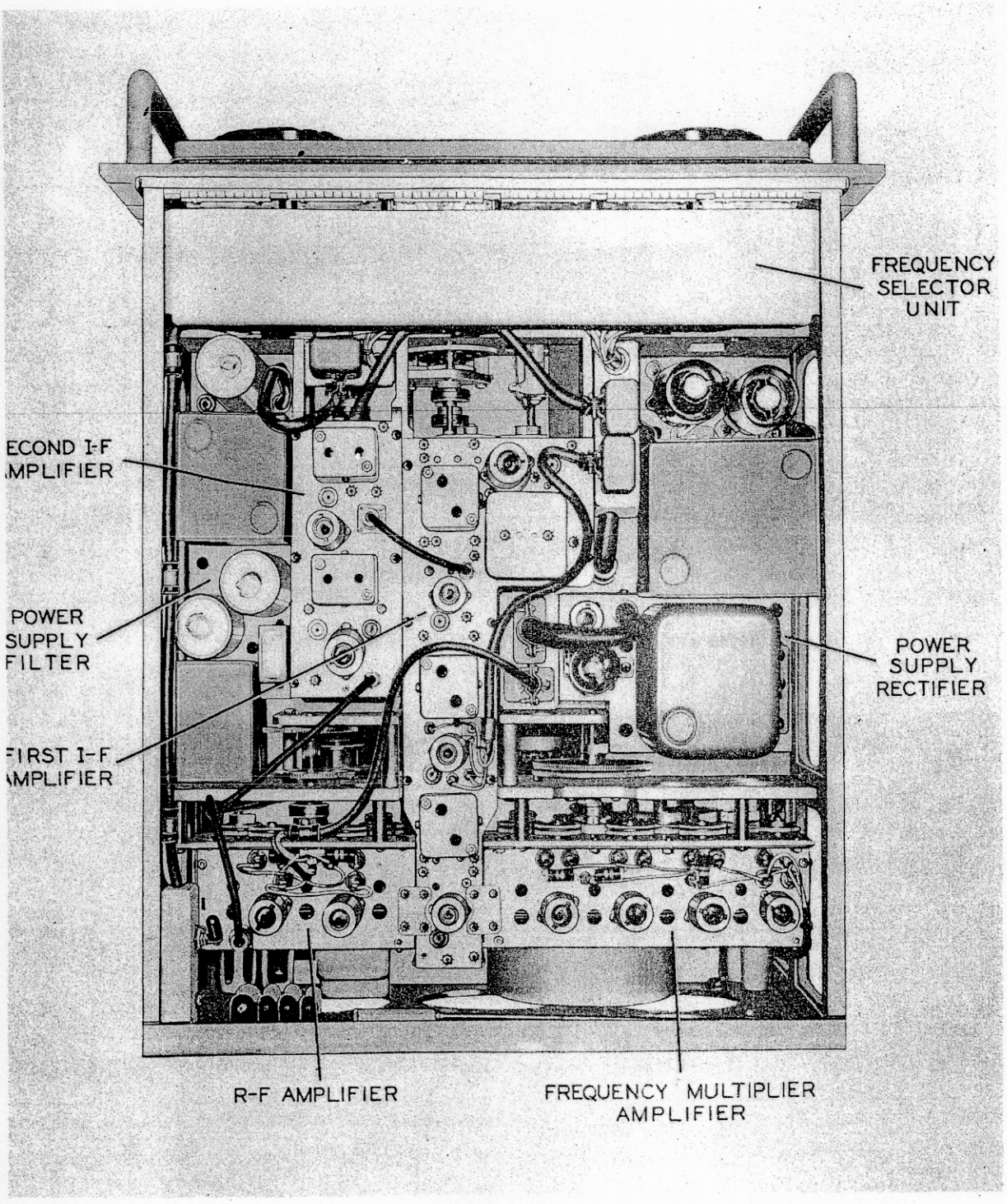

Figure 4-17. Radio Receiver R-278/GR Sub-Unit Arrangement, Top View

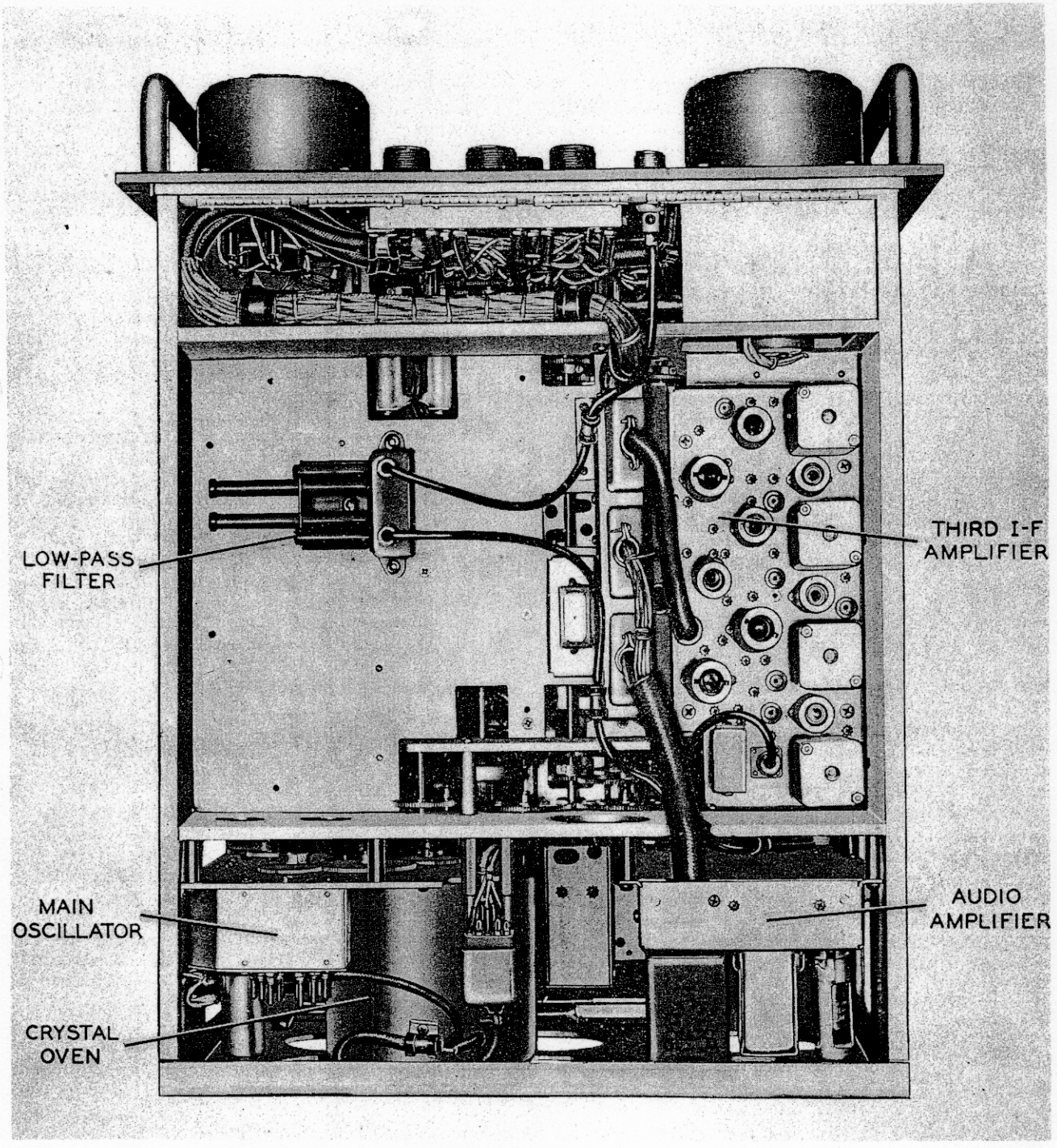

Figure 4-18. Radio Receiver R-278B/GR Sub-Unit Arrangement, Bottom View

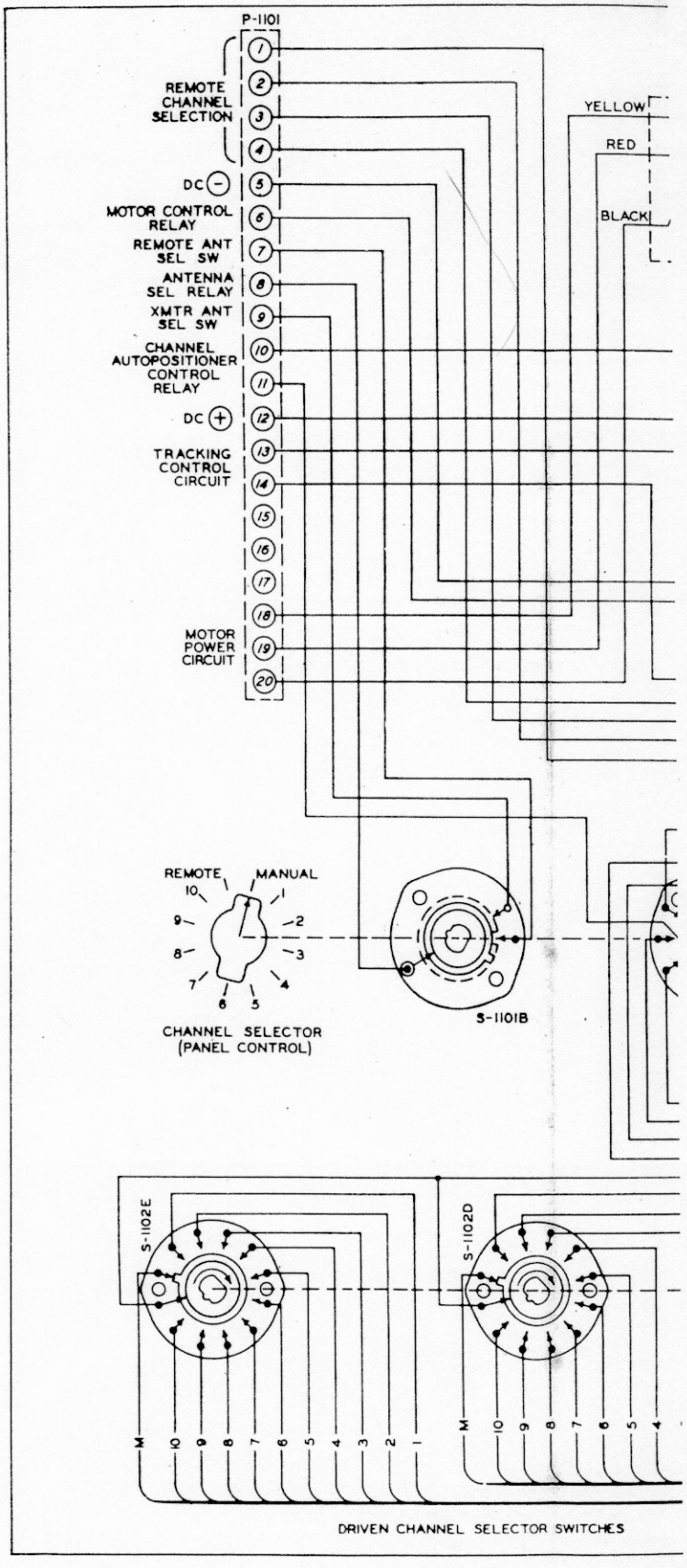
P-1101
REMOTE CHANNEL SELECTION
DC (−)
MOTOR CONTROL RELAY
REMOTE ANT SEL SW
ANTENNA SEL RELAY
XMTR ANT SEL SW
CHANNEL AUTOPOSITIONER CONTROL RELAY
DC (+)
TRACKING CONTROL CIRCUIT
MOTOR POWER CIRCUIT
YELLOW
RED
BLACK
REMOTE
MANUAL
S-1101B
CHANNEL SELECTOR (PANEL CONTROL)
S-1102E
S-1102D
M
DRIVEN CHANNEL SELECTOR SWITCHES

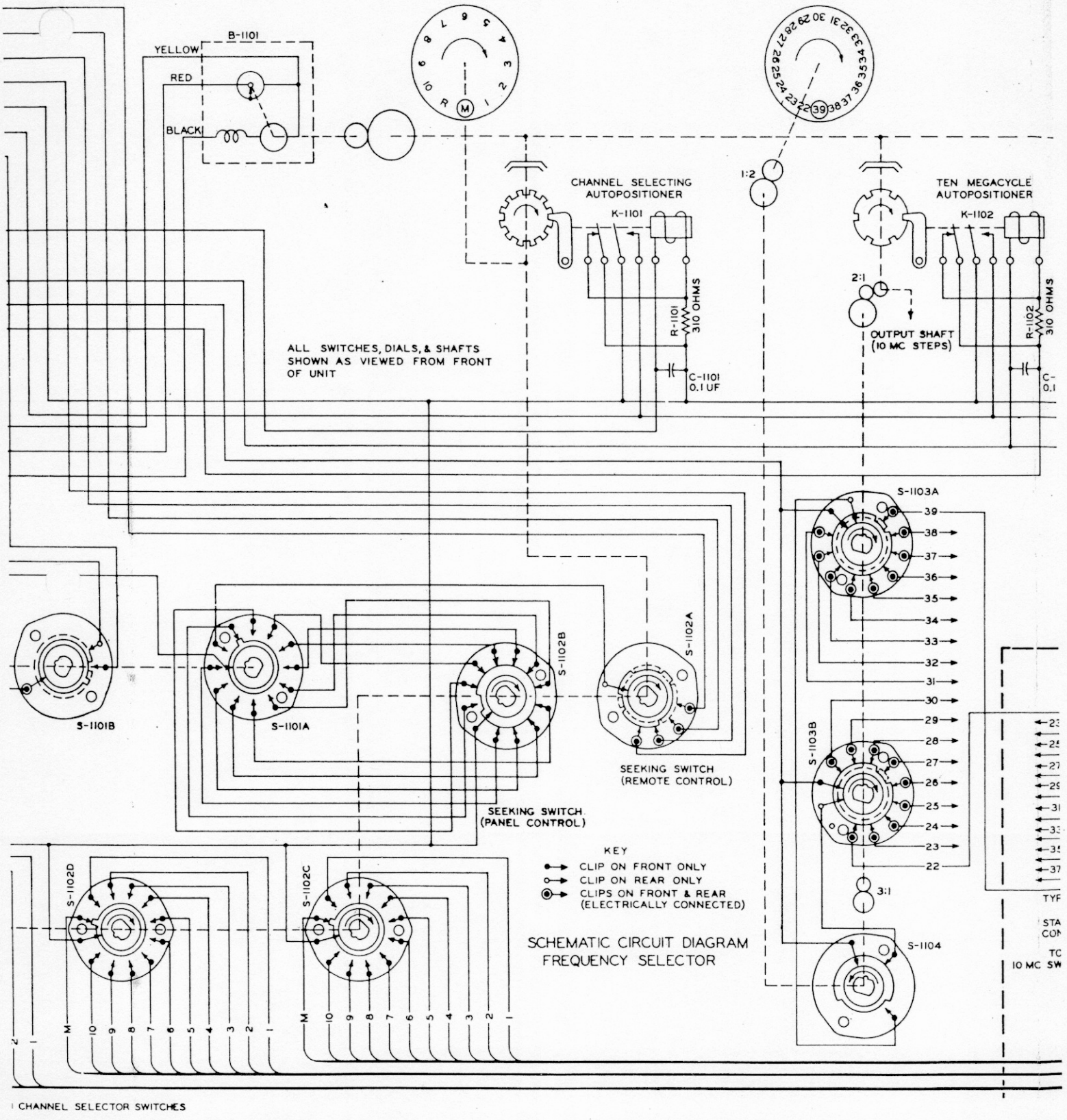
B-1101
YELLOW
RED
BLACK
CHANNEL SELECTING AUTOPOSITIONER
K-1101
TEN MEGACYCLE AUTOPOSITIONER
K-1102
1:2
2:1
3:1
OUTPUT SHAFT (10 MC STEPS)
R-1101 310 OHMS
R-1102 310 OHMS
C-1101 0.1 UF
ALL SWITCHES, DIALS, & SHAFTS SHOWN AS VIEWED FROM FRONT OF UNIT
S-1101B
S-1101A
S-1102B
S-1102A
S-1103A
S-1103B
S-1104
S-1102D
S-1102C
SEEKING SWITCH (REMOTE CONTROL)
SEEKING SWITCH (PANEL CONTROL)
KEY
CLIP ON FRONT ONLY
CLIP ON REAR ONLY
CLIPS ON FRONT & REAR (ELECTRICALLY CONNECTED)
SCHEMATIC CIRCUIT DIAGRAM
FREQUENCY SELECTOR
CHANNEL SELECTOR SWITCHES

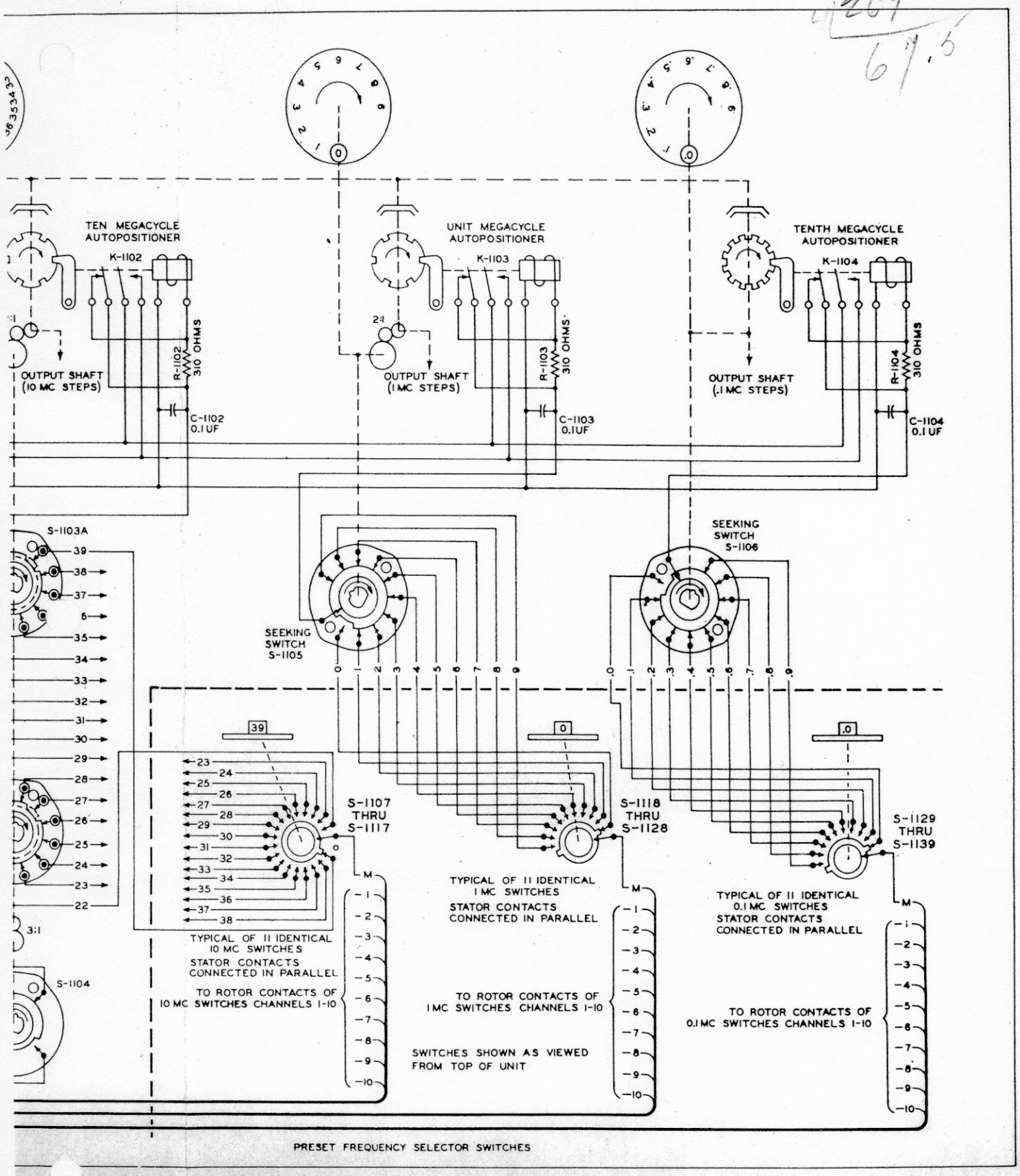

Figure 4-19 Frequency Selector Unit

9 t, X

< less
> More

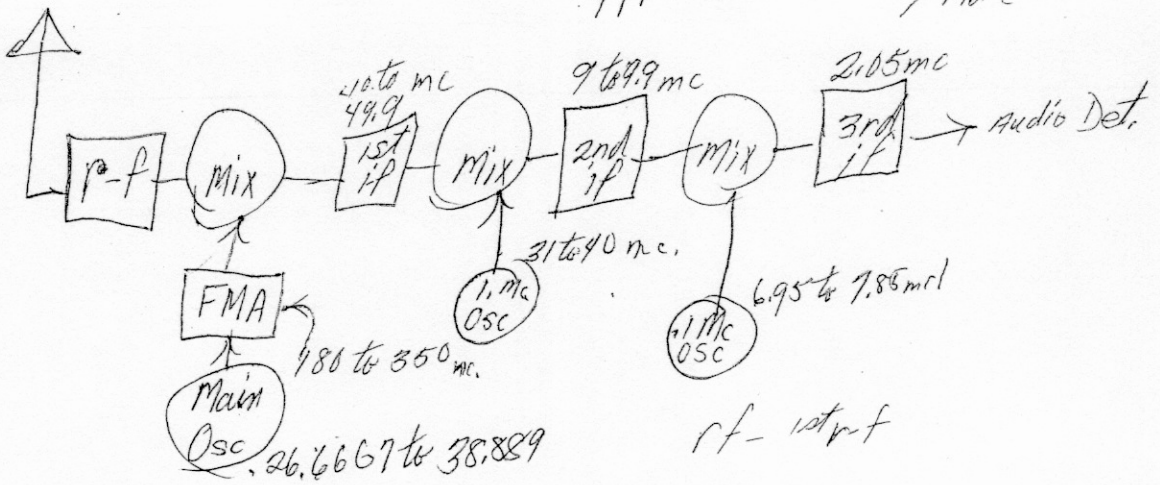

rf - 1st r-f

x9

1st if 40mc + last two digits of injection freq.

Main Osc ÷ by 9

2nd if − 3rd if (2.05) = .1 mc. osc. freq.

Main Osc. Butler - 18 CR-32/U xtals Range 26.6667 to 38.8889
1 Mc " " 10 CR-23/U " " 31 to 40
Mc Pierce Modified Colpitts 10 CR-18/U " " 6.95 to 7.85

FMA 2 Multi.
(1st doubling or tripling
2nd always tripling)
& 3 amps.
Range 180 to 350 mc
1st if 40 to 49.9 mc.
2nd if 9. to 9.9 mc
3rd if fixed 2.05
1st - image rejection
3rd if selectivity
2nd if to acquire additional frequencies

1800 frequencies available
seperated 100Kc (.1Mc)
from 220.0 to 399.9

Selectivity - 6db > 65Kc
-60db < 185 Kc

r-f Sensitivity 3uv 30%
1Kc should produce at least
1 watt S/N 10db

Audio output Main 3 watts
100uv mod 30% Lo Level 10 ohm
400Ω
3000Ω

Series NL; Shunt NL, Cancellation
Detector, Squelch, Broad bandpass
filter, + grnd grid amp.

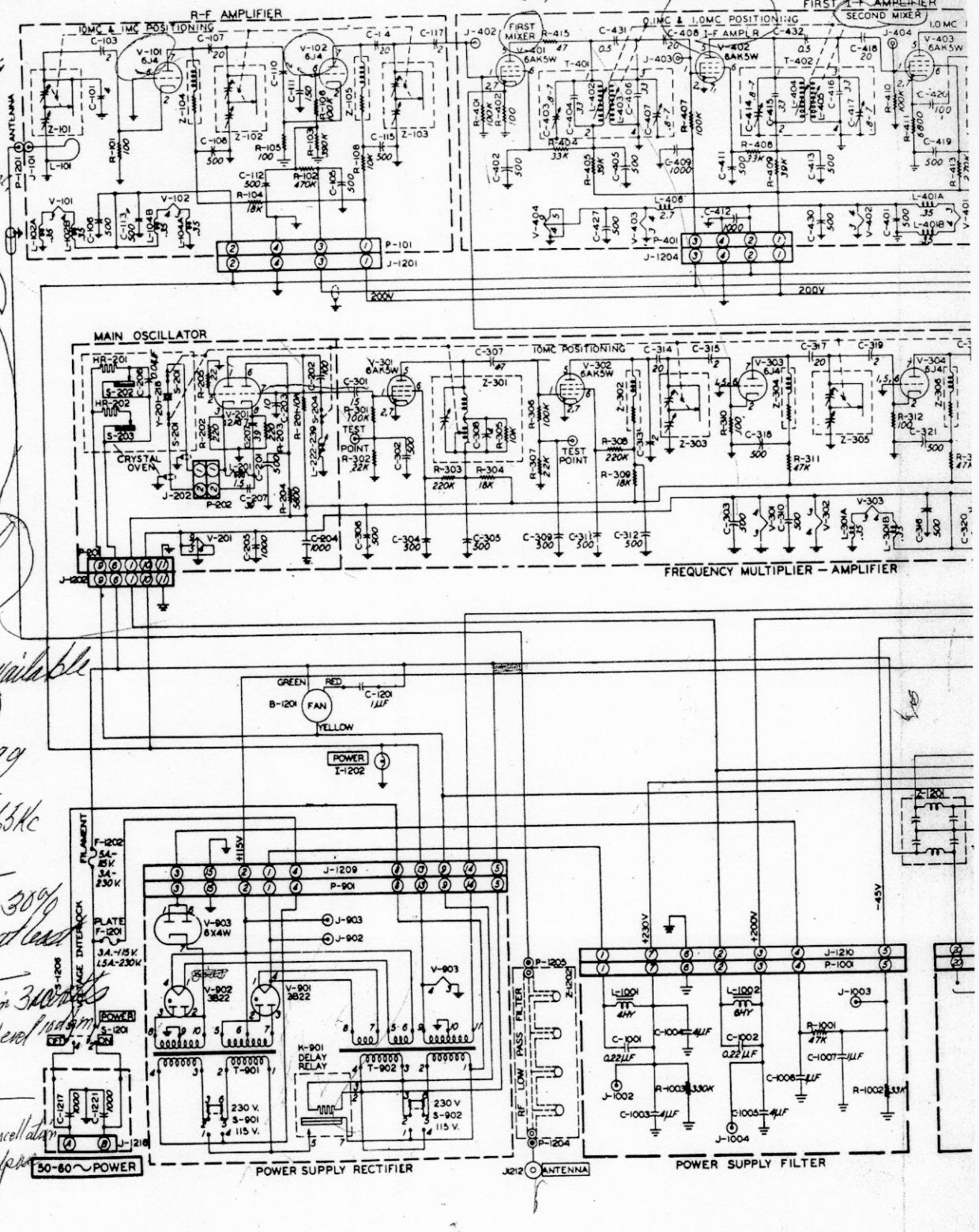

8.8889

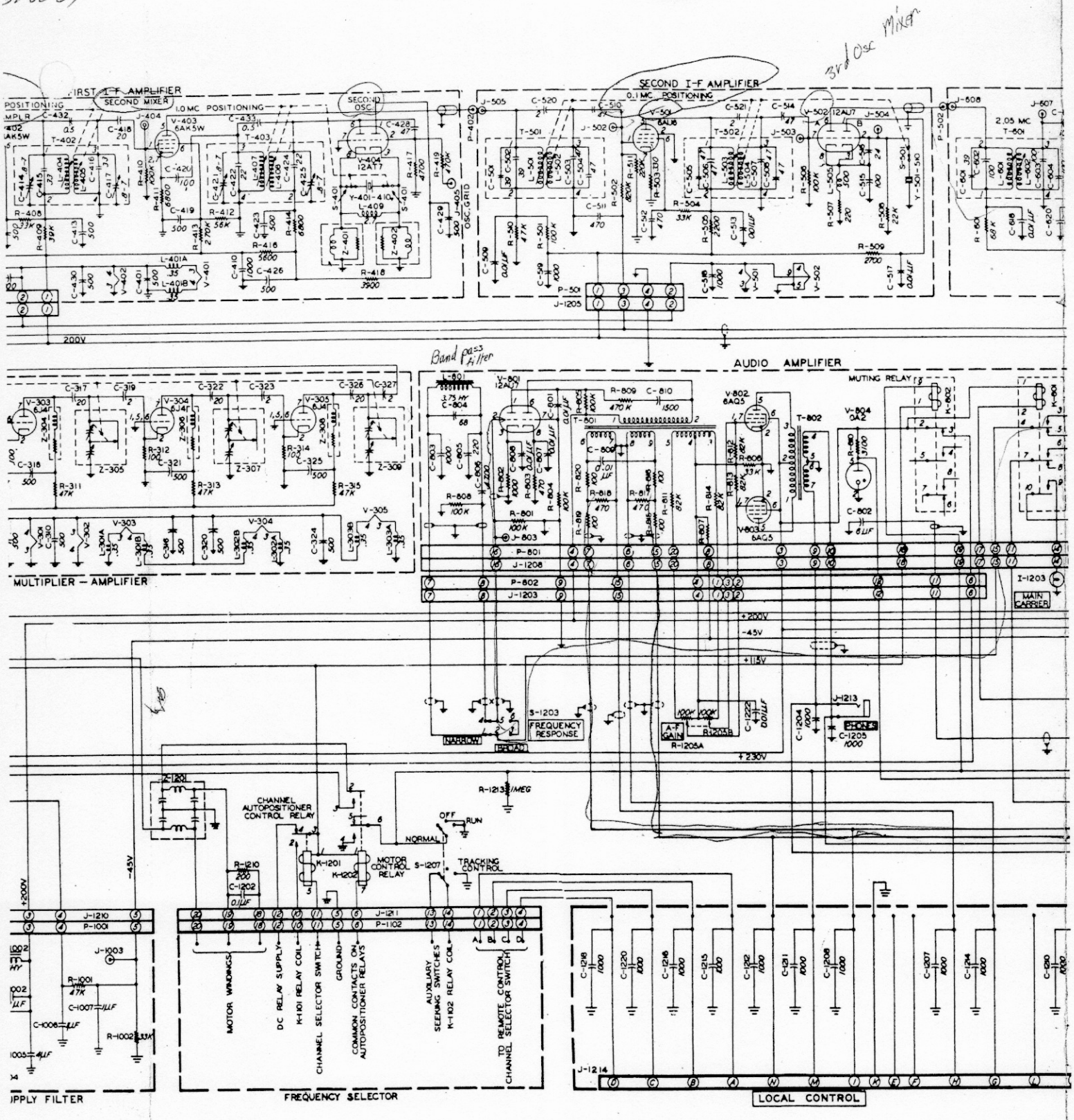
FIRST I-F AMPLIFIER
SECOND MIXER
1.0 MC POSITIONING
SECOND OSC.
SECOND I-F AMPLIFIER
0.1 MC POSITIONING
2.05 MC
200V
AUDIO AMPLIFIER
MUTING RELAY
Band pass filter
MULTIPLIER – AMPLIFIER
S-1203
FREQUENCY RESPONSE
NARROW
BROAD
A-F GAIN
R-1205A
R-1205B
PHONES
I-1203
MAIN CARRIER
+200V
-45V
+115V
+230V
CHANNEL AUTOPOSITIONER CONTROL RELAY
MOTOR CONTROL RELAY
K-1201
K-1202
NORMAL
OFF
RUN
TRACKING CONTROL
S-1207
R-1213 1MEG
R-1210
C-1202
MOTOR WINDINGS
DC RELAY SUPPLY
K-1101 RELAY COIL
CHANNEL SELECTOR SWITCH
GROUND
COMMON CONTACTS ON AUTOPOSITIONER RELAYS
AUXILIARY SEEKING SWITCHES
K-1102 RELAY COIL
TO REMOTE CONTROL CHANNEL SELECTOR SWITCH
J-1210
P-1001
J-1211
P-1102
J-1214
IPPLY FILTER
FREQUENCY SELECTOR
LOCAL CONTROL

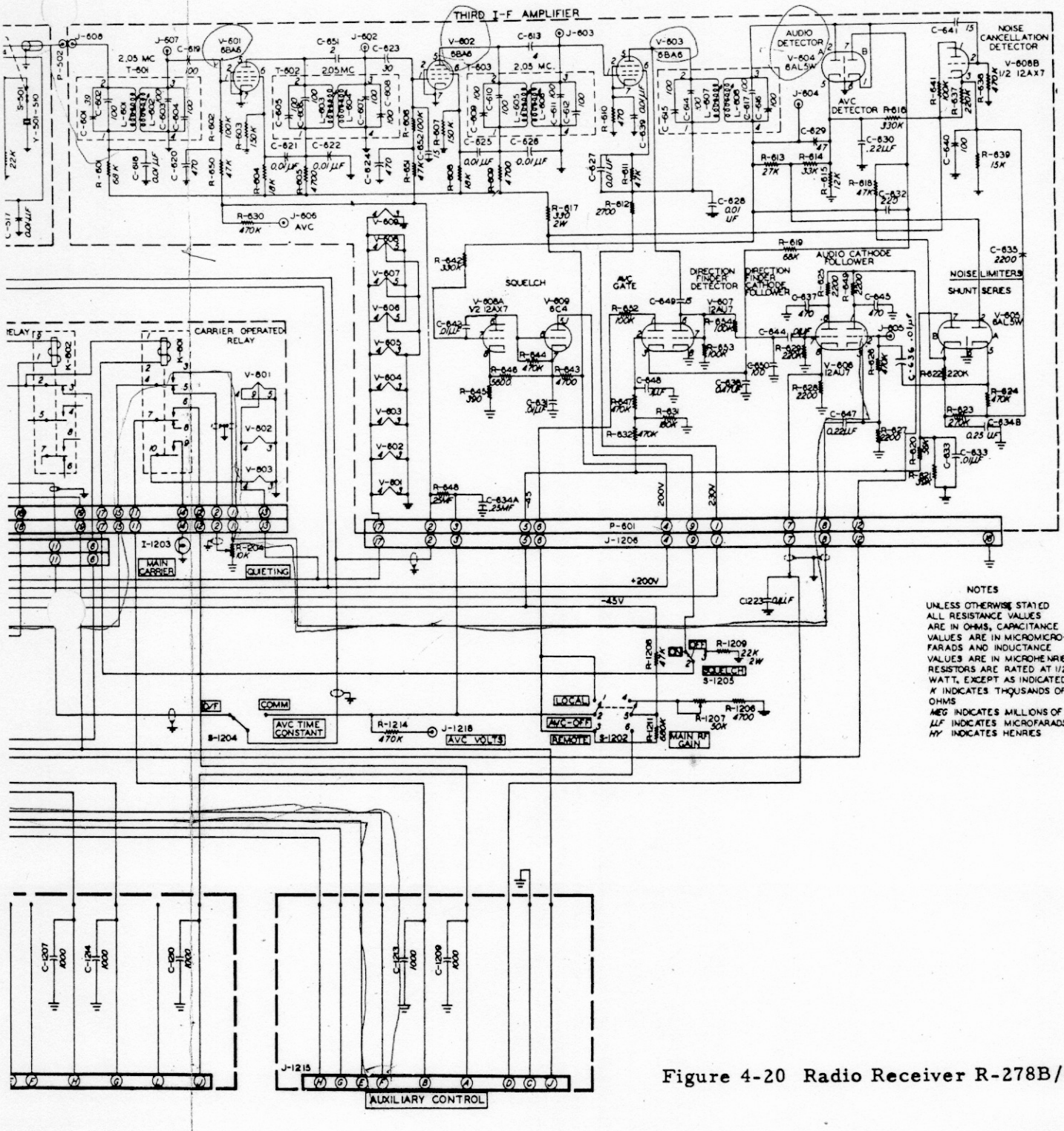

Figure 4-20 Radio Receiver R-278B/GR

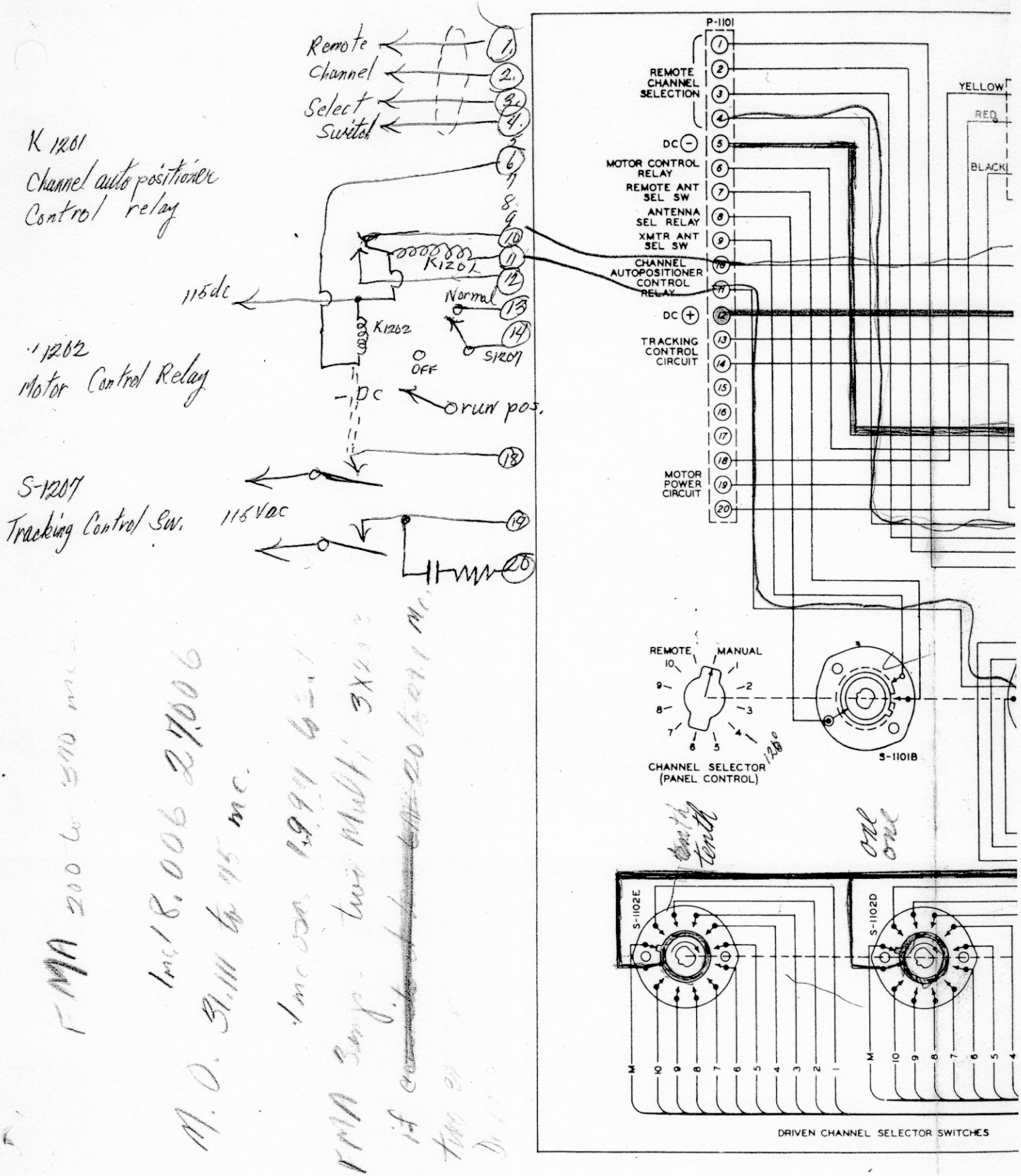
Remote
Channel
Select
Switch
K 1201
Channel auto positioner
Control relay
K1201
115dc
Normal
K1202
S1207
OFF
-DC
orun pos.
K 1202
Motor Control Relay
S-1207
Tracking Control Sw.
115Vac
P-1101
REMOTE CHANNEL SELECTION
DC (-)
MOTOR CONTROL RELAY
REMOTE ANT SEL SW
ANTENNA SEL RELAY
XMTR ANT SEL SW
CHANNEL AUTOPOSITIONER CONTROL RELAY
DC (+)
TRACKING CONTROL CIRCUIT
MOTOR POWER CIRCUIT
YELLOW
RED
BLACK
REMOTE
MANUAL
CHANNEL SELECTOR (PANEL CONTROL)
S-1101B
S-1102E
S-1102D
DRIVEN CHANNEL SELECTOR SWITCHES

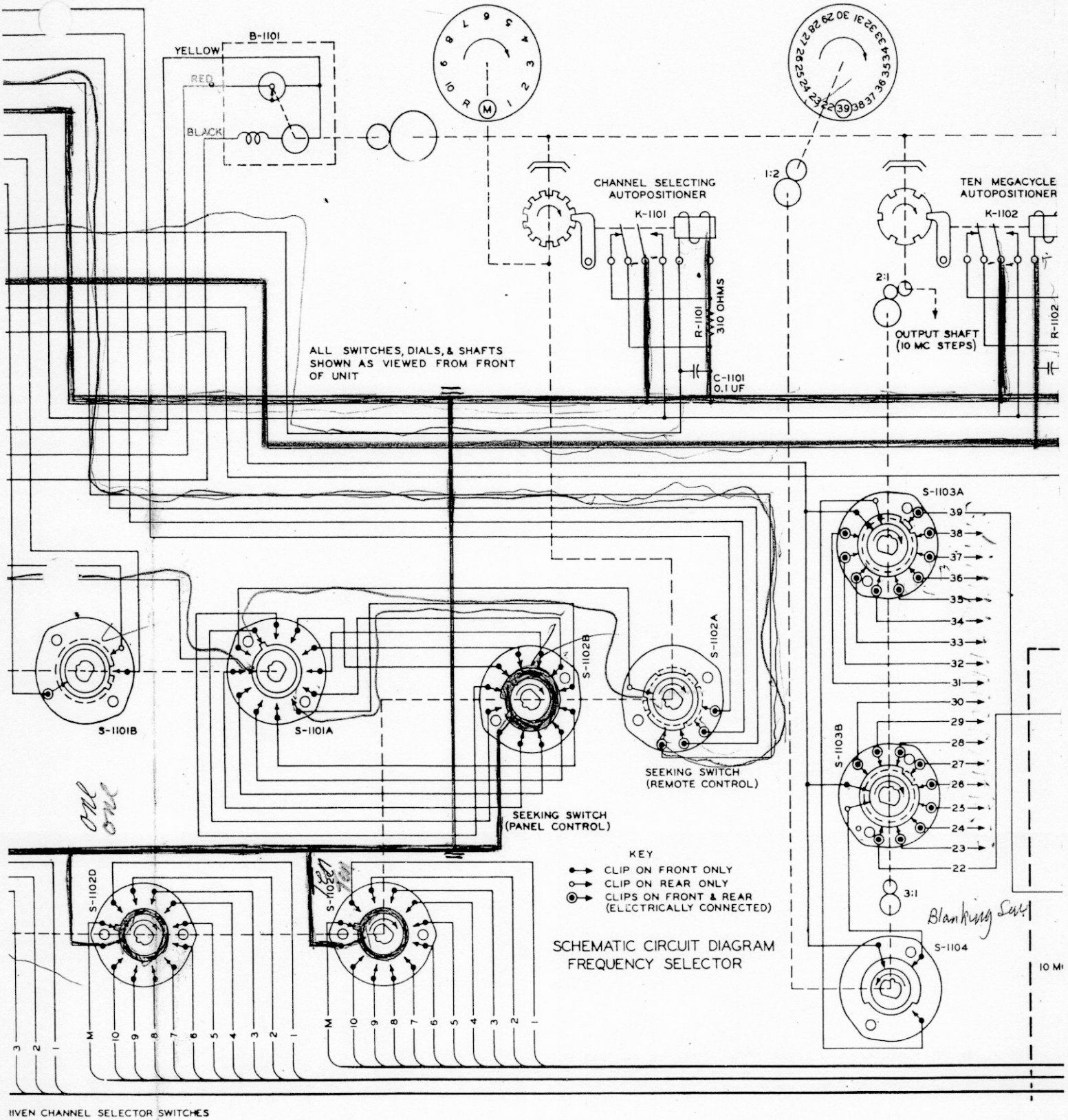

IIVEN CHANNEL SELECTOR SWITCHES

C D E

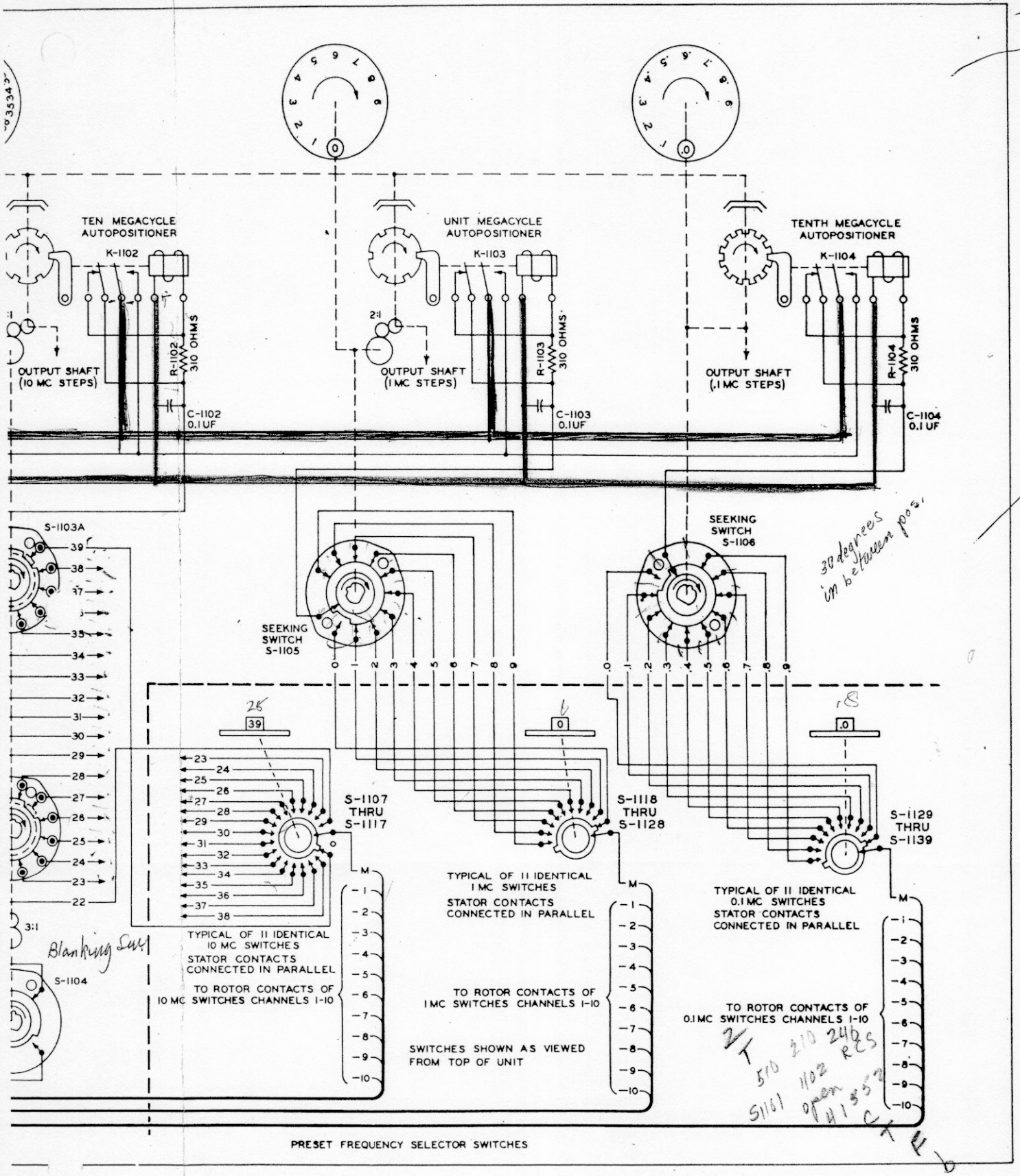

Figure 4-19 Frequency Selector Unit

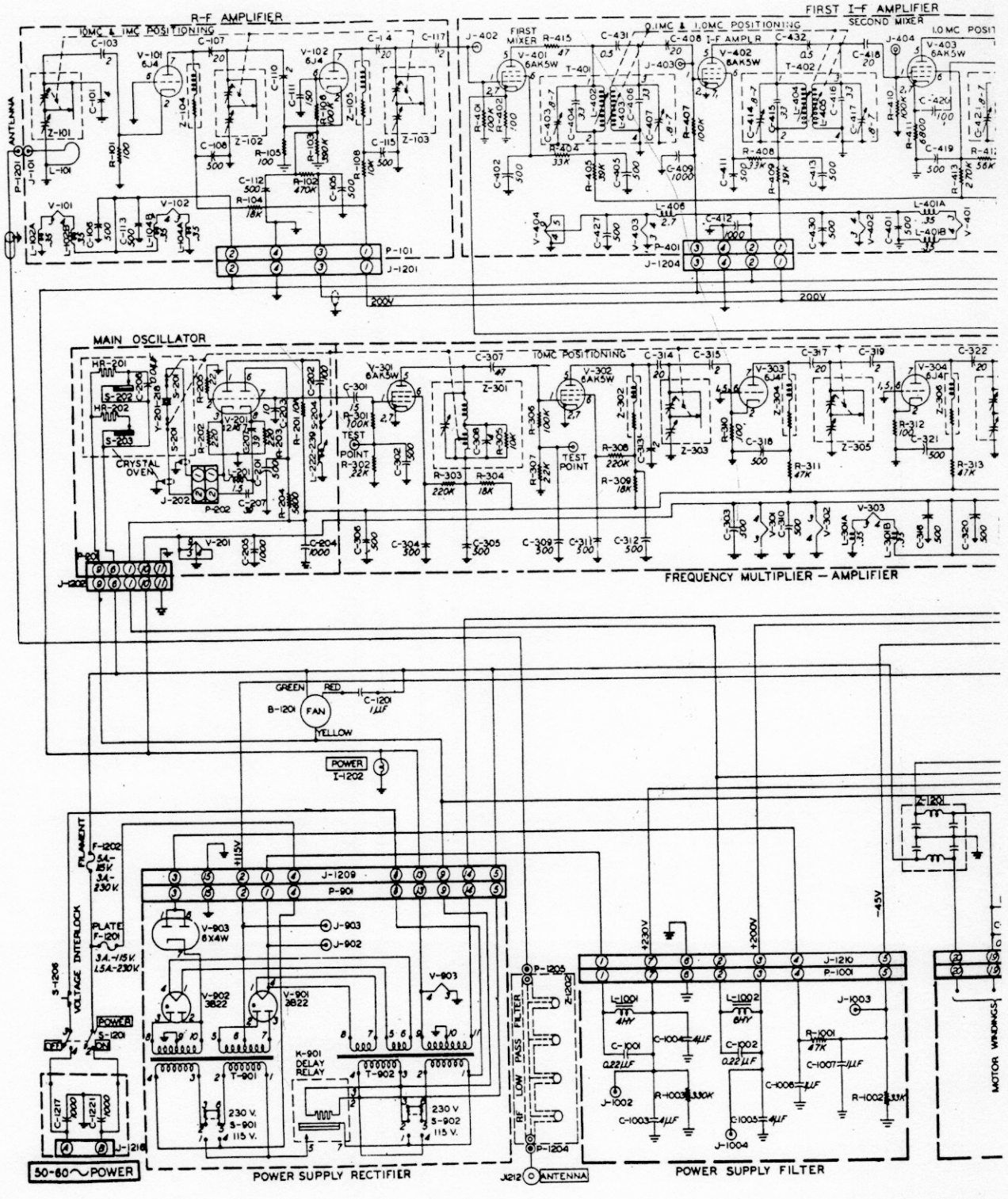
R-F AMPLIFIER
10MC & 1MC POSITIONING
FIRST I-F AMPLIFIER
SECOND MIXER
FIRST MIXER
I-F AMPLR
0.1MC & 1.0MC POSITIONING
1.0MC POSIT
MAIN OSCILLATOR
CRYSTAL OVEN
1MC POSITIONING
TEST POINT
FREQUENCY MULTIPLIER — AMPLIFIER
FAN
POWER
I-1202
FILAMENT
PLATE
VOLTAGE INTERLOCK
K-901 DELAY RELAY
230 V.
115 V.
RF LOW PASS FILTER
ANTENNA
50-60~POWER
POWER SUPPLY RECTIFIER
POWER SUPPLY FILTER
MOTOR WINDINGS
+230V
+200V
-45V
200V

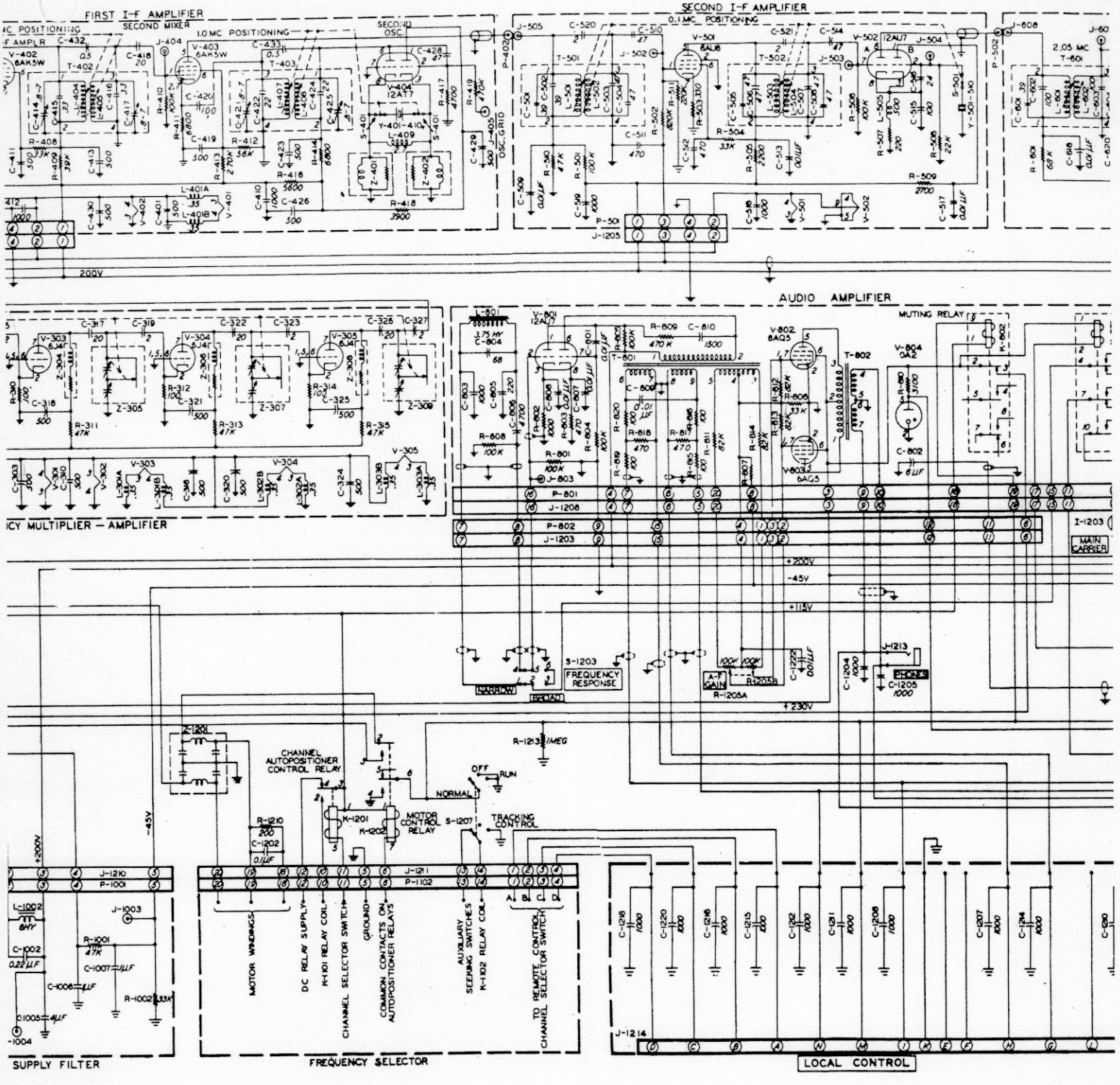
FIRST I-F AMPLIFIER
SECOND MIXER
1.0 MC POSITIONING
SECOND OSC.
SECOND I-F AMPLIFIER
0.1 MC POSITIONING
2.05 MC
AUDIO AMPLIFIER
MUTING RELAY
ICY MULTIPLIER — AMPLIFIER
MAIN CARRIER
NARROW
BROAD
FREQUENCY RESPONSE
A-F GAIN
PHONES
CHANNEL AUTOPOSITIONER CONTROL RELAY
MOTOR CONTROL RELAY
TRACKING CONTROL
OFF
RUN
NORMAL
MOTOR WINDINGS
DC RELAY SUPPLY
K-1101 RELAY COIL
CHANNEL SELECTOR SWITCH
GROUND
COMMON CONTACTS ON AUTOPOSITIONER RELAYS
AUXILIARY SEEKING SWITCHES
K-1102 RELAY COIL
TO REMOTE CONTROL CHANNEL SELECTOR SWITCH
SUPPLY FILTER
FREQUENCY SELECTOR
LOCAL CONTROL

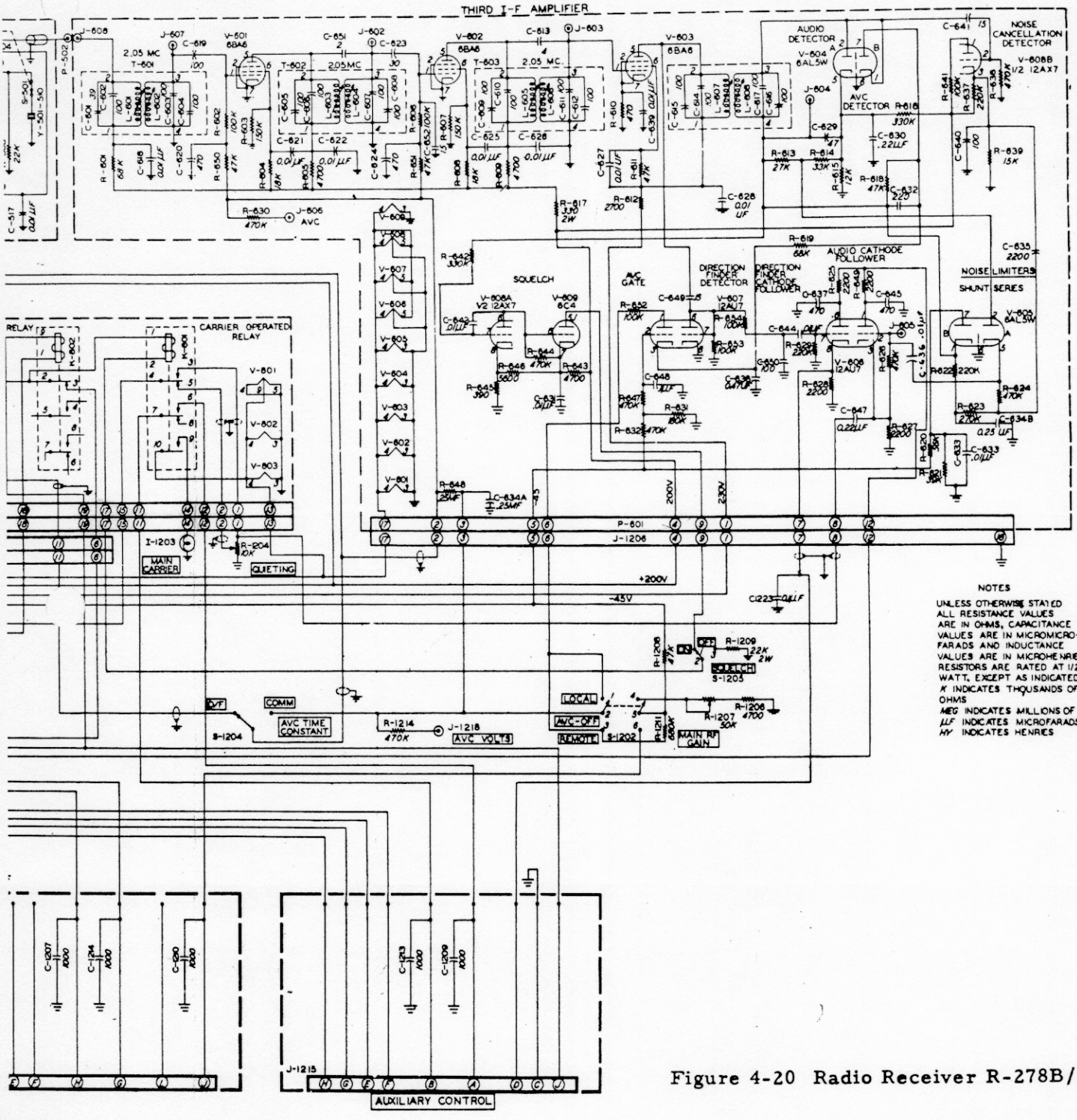

Figure 4-20 Radio Receiver R-278B/GR

UHF MILITARY EQUIPMENT

CHAPTER FIVE

T-217/GR TRANSMITTER
MD-129/GR MODULATOR-POWER SUPPLY

1.0 GENERAL

The type T-217/GR transmitter is a multi-channel transmitter, utilizing three crystal controlled oscillators. Transmitter T-217A/GR differs from the T-217/GR in that the T-217A/GR is a continuous duty transmitter. Likewise, modulator-power supply MD-129A/GR is rated for continuous duty. Several views of the transmitter and modulator-power supply are shown in Figures 5-25 through 5-28.

1.1 Frequency System

The transmitter will operate on any one of 1800 frequencies spaced at 0.1 mc intervals. There are 1750 frequencies spaced at 0.1 mc intervals in the UHF band extending from 225.0 to 399.9 mc. However, the frequency system employed is capable of providing 50 additional frequencies spaced at 0.1 mc intervals from 220.0 to 224.9 mc. Therefore, the transmitter will operate on 1800 crystal controlled frequencies spaced at 0.1 mc intervals from 220.0 to 399.9 mc. The transmitter is tuned by a motor-driven frequency selector unit. The frequency diagram is shown in Figure 5-1.

There are three frequency injection systems, which are controlled by the three crystal controlled oscillators. The 10 mc injection system tunes from 200.0 to 370 mc in 10 mc steps, a total of 18 steps. The 1 mc injection system tunes from 18 to 27 mc in 1 mc steps, a total of 10 steps. The 0.1 mc injection system tunes from 2 to 2.9 mc in 0.1 mc steps, a total of 10 steps. The output of the 0.1 mc injection system and the 1 mc injection system are fed to a mixer. The sum of the frequencies in the output of the mixer is from 20.0 to 29.9 mc, which will be in 0.1 mc steps, a total of 100 steps. These frequencies are fed to the i-f amplifier, which is tuned in 0.1 mc steps. The output of the i-f amplifier

(20.0 to 29.9 mc) and the output of the 10 mc injection system (200.0 to 370.0 mc) are fed to another mixer. The sum of the frequencies in the output of this mixer is from 220.0 to 399.9 mc, which will be in 0.1 mc steps, a total of 1800 steps. These frequencies are amplified in the exciter, driver, and power amplifier stages.

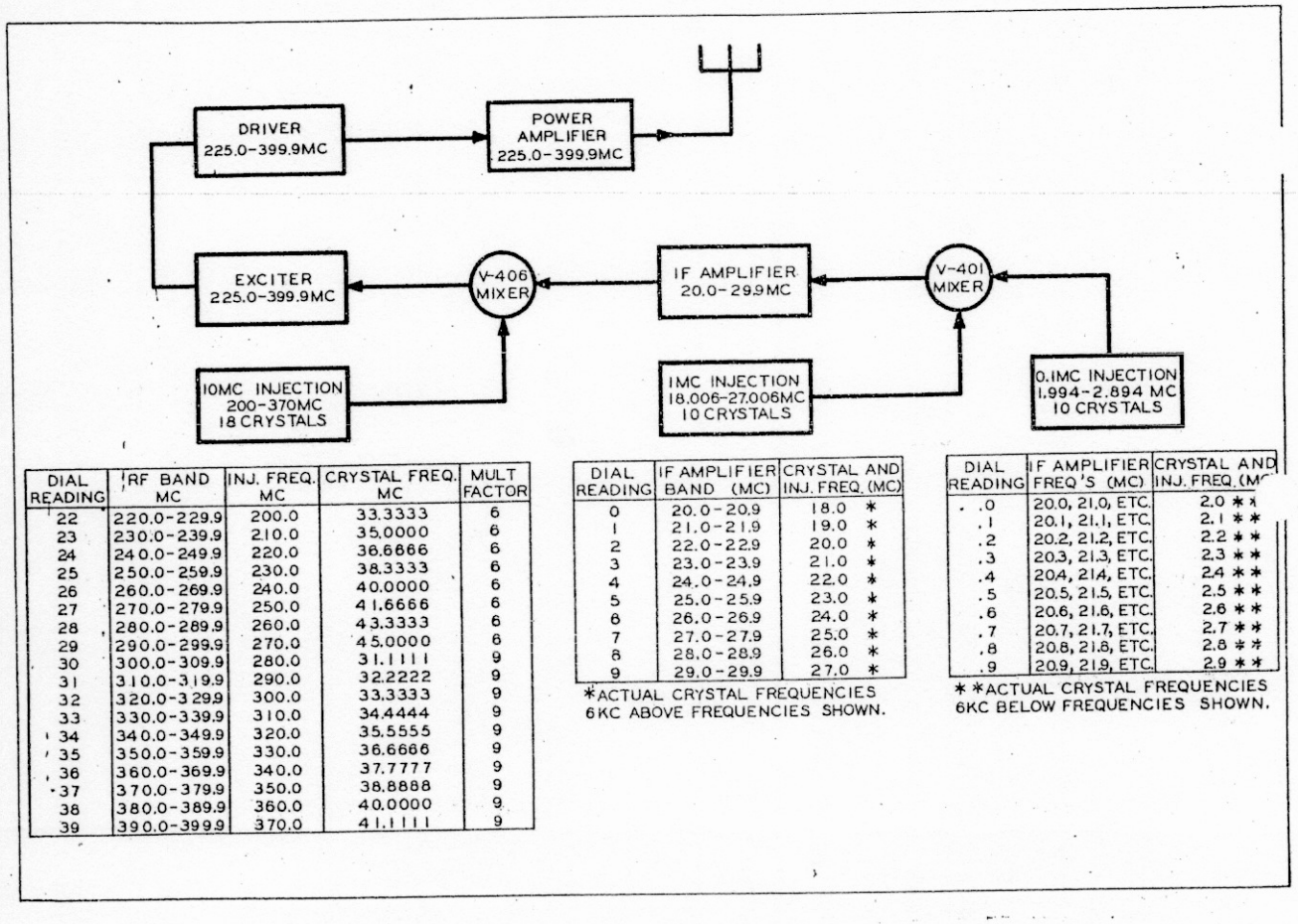

DIAL READING	RF BAND MC	INJ. FREQ. MC	CRYSTAL FREQ. MC	MULT FACTOR
22	220.0-229.9	200.0	33.3333	6
23	230.0-239.9	210.0	35.0000	6
24	240.0-249.9	220.0	36.6666	6
25	250.0-259.9	230.0	38.3333	6
26	260.0-269.9	240.0	40.0000	6
27	270.0-279.9	250.0	41.6666	6
28	280.0-289.9	260.0	43.3333	6
29	290.0-299.9	270.0	45.0000	6
30	300.0-309.9	280.0	31.1111	9
31	310.0-319.9	290.0	32.2222	9
32	320.0-329.9	300.0	33.3333	9
33	330.0-339.9	310.0	34.4444	9
34	340.0-349.9	320.0	35.5555	9
35	350.0-359.9	330.0	36.6666	9
36	360.0-369.9	340.0	37.7777	9
37	370.0-379.9	350.0	38.8888	9
38	380.0-389.9	360.0	40.0000	9
39	390.0-399.9	370.0	41.1111	9

DIAL READING	IF AMPLIFIER BAND (MC)	CRYSTAL AND INJ. FREQ. (MC)
0	20.0-20.9	18.0 *
1	21.0-21.9	19.0 *
2	22.0-22.9	20.0 *
3	23.0-23.9	21.0 *
4	24.0-24.9	22.0 *
5	25.0-25.9	23.0 *
6	26.0-26.9	24.0 *
7	27.0-27.9	25.0 *
8	28.0-28.9	26.0 *
9	29.0-29.9	27.0 *

*ACTUAL CRYSTAL FREQUENCIES 6KC ABOVE FREQUENCIES SHOWN.

DIAL READING	IF AMPLIFIER FREQ'S (MC)	CRYSTAL AND INJ. FREQ. (MC)
.0	20.0, 21.0, ETC.	2.0 **
.1	20.1, 21.1, ETC.	2.1 **
.2	20.2, 21.2, ETC.	2.2 **
.3	20.3, 21.3, ETC.	2.3 **
.4	20.4, 21.4, ETC.	2.4 **
.5	20.5, 21.5, ETC.	2.5 **
.6	20.6, 21.6, ETC.	2.6 **
.7	20.7, 21.7, ETC.	2.7 **
.8	20.8, 21.8, ETC.	2.8 **
.9	20.9, 21.9, ETC.	2.9 **

**ACTUAL CRYSTAL FREQUENCIES 6KC BELOW FREQUENCIES SHOWN.

Figure 5-1. Transmitter T-217/GR Frequency Block Diagram

There are 18 crystals in the 10 mc injection system, 10 crystals in the 1 mc injection system, and 10 crystals in the 0.1 mc injection system, a total of 38 crystals to obtain 1800 crystal controlled channels.

The crystals in the 10 mc injection system are type CR-32/U, operated in a thermostatically controlled crystal oven. The crystal frequency is multiplied 6 times when the transmitter is tuned to any frequency from 220.0 to 299.9 mc and the crystal frequency is multiplied 9 times when the transmitter is tuned from 300.0 to 399.9 mc. The 18 output frequencies from the 10 mc injection system are in 10 mc steps from 200.0 to 370.0 mc.

The crystals in the 1 mc injection system are type CR-23/U. The 10 output frequencies are in 1 mc steps from 18.0 to 27.0 mc.

The crystals in the 0.1 mc injection system are type CR-18/U. The 10 output frequencies are in 0.1 mc steps from 2.0 to 2.9 mc.

NOTE: Referring to the chart in Figure 5-1, note that in the 1 mc injection system the actual crystal frequencies are 6 kc above the frequencies shown, while in the 0.1 mc injection system the actual crystal frequencies are 6 kc below the frequencies shown.

1.2 Tuning System

A motor-driven frequency selector is used to permit rapid change of the operating frequency. The frequency selector unit has three rotary output shafts that select the proper crystal units and tunes various circuits to establish a particular operating frequency. All circuits, except the power amplifier, are tuned directly by these output shafts. The power amplifier is tuned by a servo system. The servo system uses a resistance-type bridge, which is set up by rotary switches that are driven by the three rotary output shafts of the frequency selector unit.

The three output shafts of the frequency selector unit are called the 10 mc, the 1 mc and the 0.1 mc shafts. The 10 mc shaft rotates in 18 incremental steps, each step representing 10 mc. The 1 mc shaft rotates in 10 incremental steps, each step representing 1 mc. The 0.1 mc shaft rotates in 10 incremental steps, each step representing 0.1 mc. By combining the outputs of these shafts and applying the mechanical sum to tuning of the various circuits, any one of 1800 frequencies in the range of 220.0 to 399.9 mc may be selected as explained below.

The 10 mc injection system (Main oscillator and frequency multiplier-amplifier sections) is tuned in 18 ten mc steps by the 10 mc shaft, which also operates the main oscillator crystal selector switch to select one of 18 crystal units.

The 1 mc injection system is tuned in 10 one mc steps by the 1 mc shaft, which also operates the 1 mc crystal selector switch to select one of 10 crystal units.

The 0.1 mc injection system is tuned in 10 tenth mc steps by the 0.1 mc shaft, which also operates the 0.1 mc crystal selector switch to select one of 10 crystal units.

The i-f amplifier is tuned by the 1 mc and 0.1 mc shafts, the rotations of which are combined in a differential tuning mechanism to produce 100 tenth mc steps.

The exciter and driver are tuned in 180 one mc steps by the 10 mc shaft (18 positions) and the 1 mc shaft (10 position) whose rotary motions are combined in a differential mechanism to produce 180 rotational positions.

The power amplifier is <u>not</u> tuned directly by the output shafts, but by a servo system which takes its information from a resistance-type servo bridge. This bridge is set up by the rotary switches driven by the 10 mc, the 1 mc, and the 0.1 mc shafts, which produces 360 one-half mc steps. In transmitters with serial number below 1000, this bridge is set up by the rotary switches driven by the 10 mc and the 1 mc shafts, which produces 180 one mc steps.

1.3 Frequency Example

As an example case of frequency selection, assume that one wishes to tune the transmitter to an output frequency of 395.5 mc. One of the 10 pre-set channels (assume channel 10) is set to 395.5 mc by turning the knurled disks to 395.5 as indicated on the dials. The CHANNEL SELECTOR switch is turned to channel 10. The frequency selector motor starts and produces a mechanical output that tunes the transmitter properly in the following manner:

10 mc injection system	370.0 mc
1 mc injection system	23.006 mc
0.1 mc injection system	2.494 mc
Exciter, Driver & Power Amplifier	395.5 mc

In this case, the main oscillator in the 10 mc injection system is tuned to 41.1111 mc, which when multiplied 9 times, results in a frequency of 370.0 mc.

1.4 Power Output

The power output of the T-217/GR transmitter is 100 watts nominal. The output impedance is 52 ohms. The output from the power amplifier is sampled by a device known as a directional coupler, which provides power-output and standing-wave-ratio information to a front panel meter. A low-pass filter is used in the output circuit. The second and third harmonics of the output frequency is down 40 db and all other harmonics are down 60 db. The carrier noise level is 40 db below 95% modulated carrier level. The output frequency stability is $\pm$ 10 kc.

1.5 Audio System

The power amplifier is plate modulated by voice or a 1020 cps tone. The power amplifier can be modulated up to 95%. The distortion is less than 12% as measured through the rectified carrier sidetone circuit with 95%

modulation and 20 db audio compression. The audio bandwidth is 400 to 3000 cps when narrow band is used, and is 200 to 20,000 cps when broad band used.

1.6 Power Requirements

The transmitter and modulator-power supply operates from either 115 or 230 volts, single phase, 50 to 60 cycles power source. The power factor is 88%. All fuses for the transmitter and modulator-power supply are located in the modulator-power supply unit.

1.7 Construction

The transmitter contains 9 sub-chassis which may be removed individually from the basic frame. Each sub-chassis is electrically connected to the system by a cable that plugs into a receptacle on the basic frame. The sub-chassis are as follows:

Unit

Main oscillator
Frequency mult-amp
I-F oscillator
Exciter
Driver
Power-amplifier
Servo-amplifier
Monitor amplifier
Frequency selector

The modulator-power supply is built up on an inside-out type of construction on one main frame. There are no sub-assemblies.

The location of the 9 sub-shassis in the transmitter are shown in Figure 5-27 and Figure 5-28.

1.8 Block Diagram

A block diagram of the T-217 transmitter is shown in Figure 5-2. This diagram shows that the Servo System is controlled by the 10 mc, 1 mc, and 0.1 mc auto-positioners. In transmitters with serial numbers below 1000 the Servo System is controlled by only the 10 mc and 1 mc autopositioners.

T-217/GR TRANSMITTER
MD-129/GR MODULATOR-POWER SUPPLY

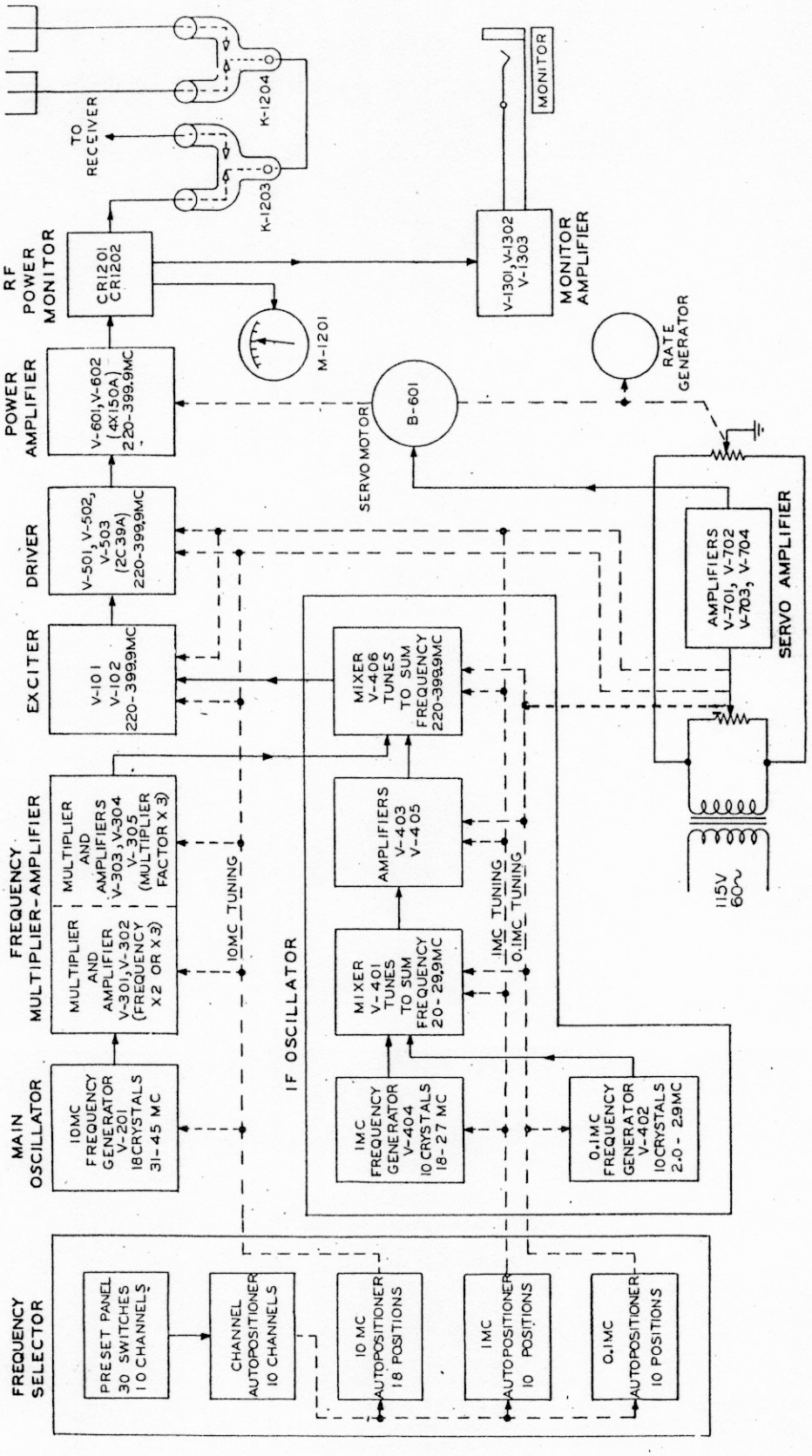

138/5
5/58

Figure 5-2. Radio Transmitter T-217/GR, Complete Block Diagram

2.0 THEORY OF OPERATION

The individual circuits of the transmitter and modulator-power supply will now be considered in detail.

Three of the nine sub-chassis included in the transmitter are incorporated in the frequency generating system. These are the Main Oscillator, the Frequency Multiplier-Amplifier, and the I-F Oscillator. The outputs of the three crystal oscillators are multiplied, amplified and mixed together in order to provide the desired frequency for the Exciter.

2.1 Main Oscillator

Referring to Figure 5-3, the Main Oscillator employs a Butler circuit and consists of: V-201, type 12AT7, a high mu duo-triode; a bank of 18 type CR-32/U crystal units with a crystal switch, all inside a temperature-controlled crystal oven; a bank of 18 coils with associated switch; and other circuit elements. The oscillator consists of a grounded grid amplifier followed by a cathode follower which in turn couples back into the grounded grid stage through the crystal.

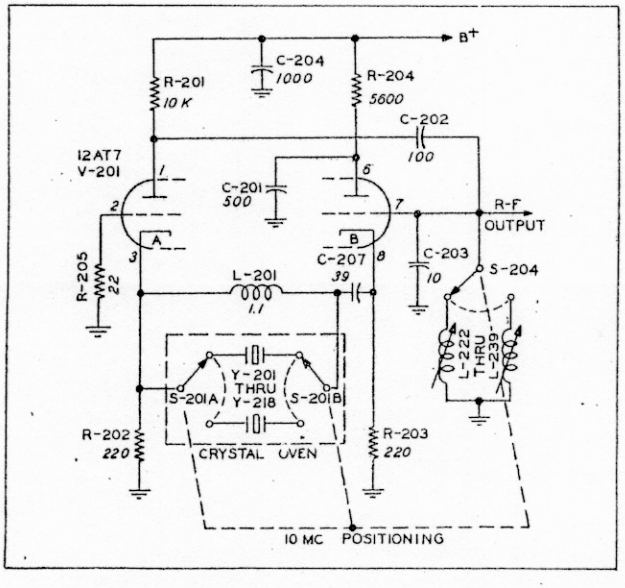

Figure 5-3. Main Oscillator, Simplified Schematic

To understand the operation of this oscillator imagine a random positive pulse appearing at the cathode, pin 3, of the grounded grid amplifier, V-201A. Since the grid is grounded through a 22 ohm resistor, a rise in cathode voltage will cause a decrease in plate current and therefore an increase in plate voltage. This positive pulse is coupled to the grid of the cathode follower, V-201B. The cathode voltage follows the grid voltage so that the positive pulse is coupled back to the cathode of the grounded grid amplifier through the crystal. The crystal presents a low impedance path only at series resonance. Thus oscillations are generated by the stage and sustained by the feedback loop. The plate load of the grounded grid amplifier is the tuned circuit C-203 in parallel with one of 18 inductances selected by the 10 mc autopositioner output shaft. The frequency of oscillation can be adjusted over a small range by adjusting the tuning of the plate circuit. This circuit is normally adjusted so that the frequency of oscillation is precisely as desired, thereby eliminating any inaccuracy in the frequency of the crystal unit. A 1.1 microhenry inductance, L-201, is used to resonate with the stray circuit capacities at approximately 30 mc. The oscillator signal is fed to V-301 through a capacitor and a soldered connection connecting the oscillator unit with the frequency-multiplier amplifier unit.

The crystal is maintained at a constant temperature by the thermostatically controled crystal oven. The crystal oven operates on 115 volts a-c and includes two heater elements and two thermostats. One heater element has a rating of approximately 70 watts and is employed to bring the oven to operating temperature rapidly when the equipment is first turned on. The second heater element has a rating of approximately 30 watts and operates intermittently to maintain the oven at the proper temperature (75° C $\pm 5^{\circ}$C).

2.2 Frequency Multiplier-Amplifier

Referring to Figure 5-4, the circuit elements mounted upon this sub-chassis act together to multiply the output of the main oscillator by either six or nine. This provides eighteen frequencies spaced 10 mc apart in the range of 200.0 to 370.0 mc.

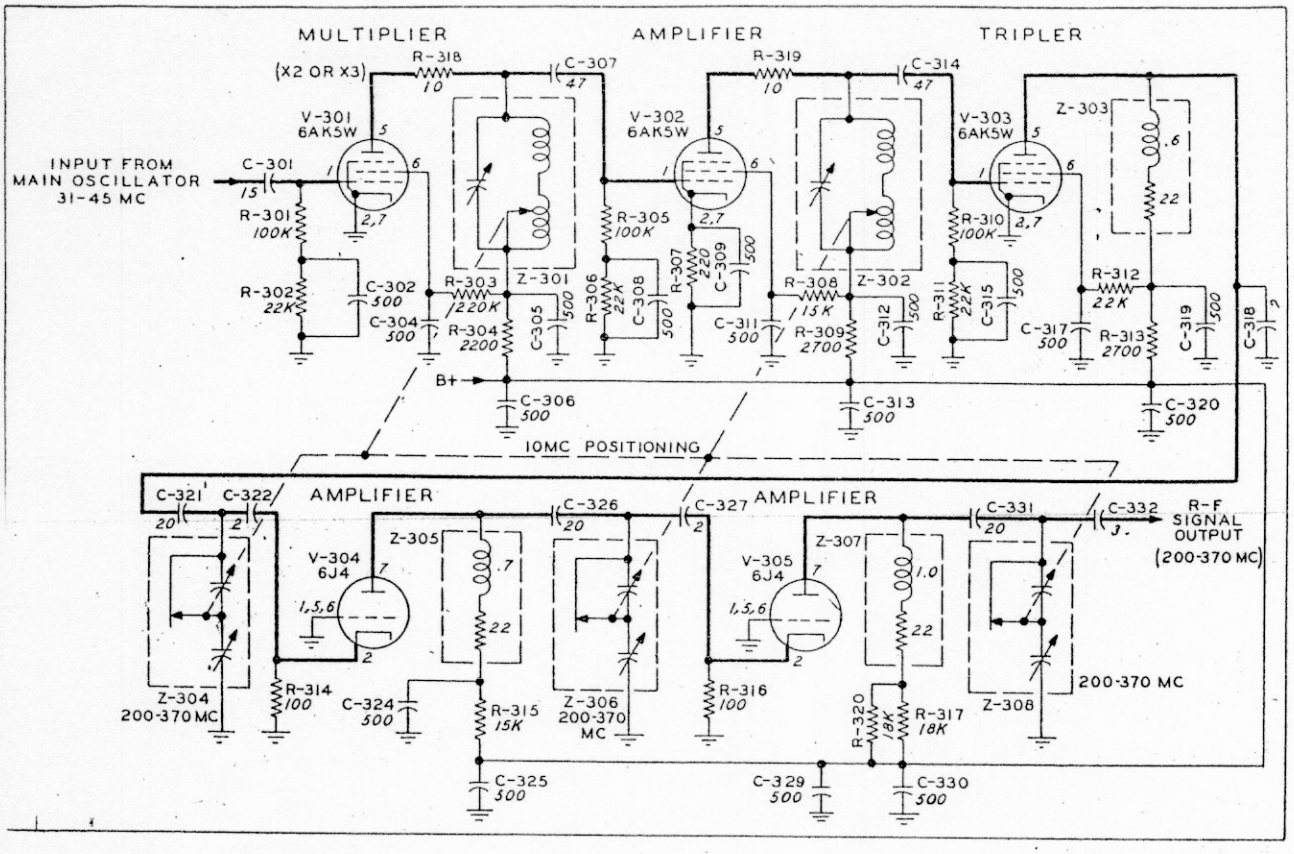

Figure 5-4. Frequency Multiplier-Amplifier, Simplified Schematic

The output signals from the main oscillator are coupled through C-301 to V-301 which is the first stage of the frequency multiplier-amplifier. Here, either the second or third harmonic of the main oscillator frequency is selected (by the parallel tuned tank, Z-301, in the plate circuit), and amplified. This harmonic is then coupled through C-307 to V-302 where it is amplified further. Z-301 and Z-302 are the plate tanks of V-301 and V-302, respectively. Each consists of an eighteen turn tapered toroidal coil in series with a high frequency trimmer coil, both of which are in parallel with a variable capacitor to provide low frequency padding. The eighteen turn coil is wound on a form in such

a way that each turn of the coil may be contacted by a switch arm. The switch arm is driven in eighteen steps by the frequency selector unit. The tanks may consequently be tuned in increments of 3.3333 mc each, between 66.6666 and 123.3333 mc.

After the signal is amplified by V-302, it is coupled through C-314 to V-303 where it is tripled before being further amplified in the cascade amplifiers V-304 and V-305. These three amplifier stages employ a special r-f tuner circuit represented on the schematic as Z-304, Z-306 and Z-308. These tuners are a unique device and because they require very precise alignment adjustment it is important that they be thoroughly understood. They are described in the following section. These tuners are ganged together and driven by the frequency selector unit. They are tuned in increments of 10 mc each between the limits of 200.0 to 370.0 mc. The output of the frequency multiplier-amplifier is coupled through C-332 to the cathode of the final mixer, V-406, on the I-F oscillator sub-chassis.

2.3 R-F Tuners

In the last three stages of the frequency multiplier-amplifier, in the exciter and in the driver, special r-f tuners are used. Each of these sub-chassis includes three separate tuners which are ganged together, and are driven by one of the autopositioner shafts, or by differential outputs of two shafts. These tuners cover the wide frequency range necessary by simultaneously changing both the capacitance and the inductance of their elements as they are positioned by the frequency selector unit.

Figure 5-5 illustrates the principal elements of a typical tuner of the type used. This r-f tuner consists of a variable capacitor and variable inductor which are rotated simultaneously so that in 180° of rotation the resonant frequency changes linearly 180 mc or 1 mc per degree. The variable capacitor consists of two stator plates and three rotor plates, the front and rear of which are radially slotted for the purpose of alignment adjustments. The inductive loop consists of the inductance stator rod, the inductance ring and the inductance rotor rod.

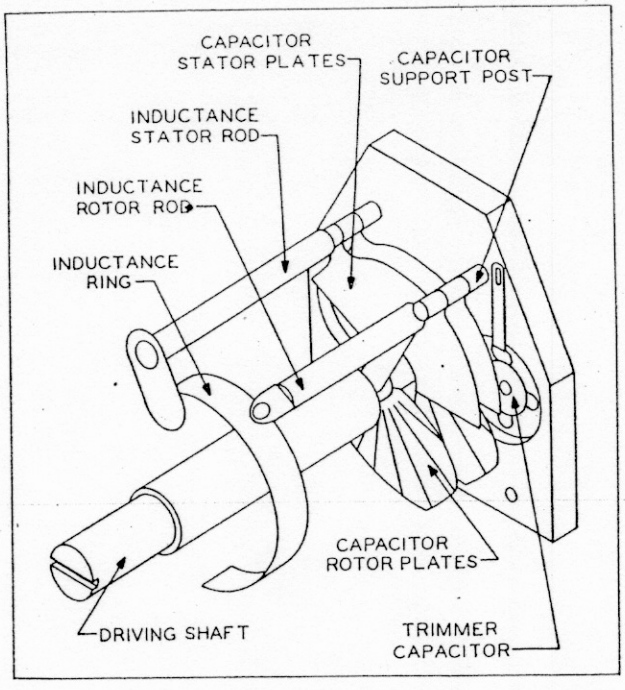

Figure 5-5. R.F. Tuner,
Principal Elements

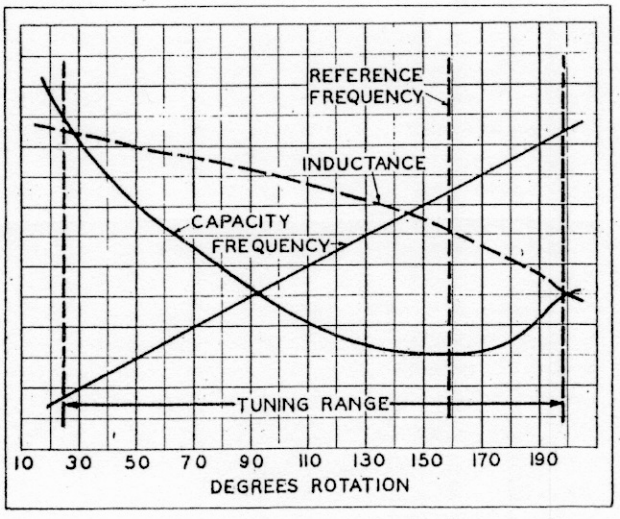

Figure 5-6. R.F. Tuner,
Tuning Curves

Figure 5-6 illustrates the manner in which the inductance and capacitance change to produce the required resonant frequency as the tuning elements are rotated. It will be noted that the point of minimum capacitance does not correspond to the maximum frequency of the tuning range. The point at which the inductance rotor rod is exactly in line with the short capacitor support bar, is used as a reference point in the tracking procedures.

The capacitor rotor plates are divided into 20 degree sectors by slots which are cut well down toward the center of the plates. The two plates on each tuner which are so slotted, have their slots staggered so that the slots on one plate correspond to the center of the sectors on the other plate. If the capacitor rotor plates are rotated in ten degree increments (10 mc), at each position at which the rotor comes to rest, one sector of one or the other of the plates will be just half engaged with the stator. Tracking of these tuners over the frequency range is accomplished by bending, in the proper direction, the sector which is half engaged at each of the tracking frequencies.

2.4 I-F Oscillator

Referring to Figure 5-7, the I-F Oscillator consists of the 0.1 mc and 1 mc oscillators, the first mixer V-401, amplifier stages V-403 and V-405, and the second mixer V-406. The purpose of this circuit is to provide to the mixer, V-406, an injection signal at any of 100 frequencies spaced 100 kc apart in the range of 20.0 to 29.9 mc. When any of these frequencies and the output frequency of the frequency multiplier-amplifier are added together in the mixer, V-406, it makes available to the excitor a signal of some particular frequency to be amplified and finally emerge as the output of the power amplifier. To accomplish this purpose, two crystal oscillators are employed, their outputs being added together and amplified before being impressed upon the grid of the mixer V-406.

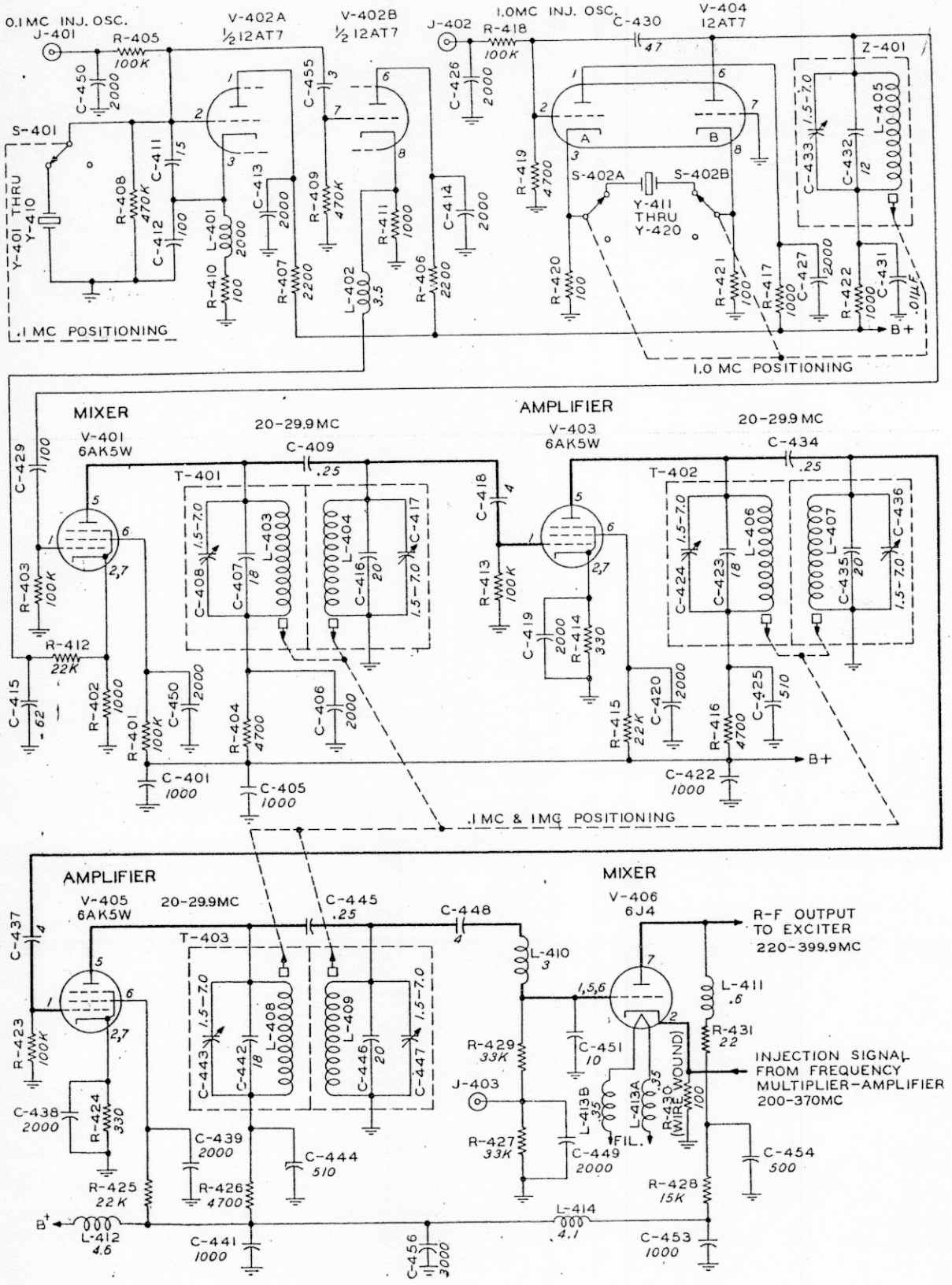

138/5
5/58

Figure 5-7. I.F. Oscillator, Simplified Schematic (Serial Numbers 0-2331)

The first of these two oscillators is composed of half of V-402 and its associated circuitry. This is funadmentally a Colpitts oscillator with the output taken from the grid circuit to minimize harmonic output. The various crystals, Y-401 to Y-410, are selected by S-401 which is driven by the 0.1 mc shaft. This oscillator output, as determined by the selected crystal, is at a frequency of 1.994 to 2.894 mc in steps of 100 kc (0.1 mc).

The output from this oscillator is coupled through C-455 to the grid of the other half of the duo-triode V-402. This triode section, used as a cathode-follower, acts as a buffer between the oscillator and the mixer, V-401. The output from this cathode-follower is coupled to the cathode of the mixer, V-401, through L-402 and R-412.

The second oscillator upon this sub-chassis is a Butler oscillator composed of both triode sections of V-404. Crystals Y-411 to Y-420 are the frequency control items for this oscillator, and the plate tank, Z-401, is permeability tuned. The output frequency, as determined by the crystals, ranges from 18.006 to 27.006 mc in steps of one mc. Crystal selector switch S-402, and the tuning of Z-401 are both controlled by the one mc shaft. The output from this oscillator is coupled to the control grid of the mixer, V-401, through C-429.

With these two independent inputs to the mixer, V-401, there will appear at the output of the mixer the sum of the two input frequencies. Since one input may vary from 1.994 to 2.894 mc in ten steps of 100 kc, and the other input may vary from 18.006 to 27.006 mc in ten steps of one mc, this output sum-frequency may vary from 20.0 to 29.9 mc in 100 steps of 100 kc. T-401 contains the plate tank for V-401 as well as the grid tank for the amplifier, V-403.

The output from V-401 is coupled to the grid of V-403 through C-409 and C-418. V-403 and V-405 are both r-f amplifiers with T-402 and T-403 functioning exactly as did T-401.

T-401, T-402 and T-403 are all permeability tuned by a rack which is driven by two cam shafts, the sum of whose positions determines the position of the rack. These two cams are driven by the 1 mc shaft and the 0.1 mc shaft. The position of the rack is therefore simultaneously affected by these two inputs, and as a consequence will position the shaft in 100 incremental steps, each step corresponding to.0.1 mc. T-401, T-402 and T-403 are then tuned over the range from 20.0 to 29.9 mc in steps of 100 kc each.

The output from V-405 is coupled to the grid of the mixer V-406 through C-445 and C-448. Since the output of the frequency mulitplier-amplifier appears at the cathode of this mixer, the output of the stage as appearing at the plate will be the sum of these two frequencies. There is then available as an input to the exciter any desired frequency from 220.0 to 399.9 mc in 100 kc increments.

The mixer stage, V-406, was converted as of serial no. 2331 (approx.) from a cathode-grid mixer to a cathode-plate mixer as shown in Figure 5-8. The plate of V-406 is now shunt fed through the secondary of T-403.

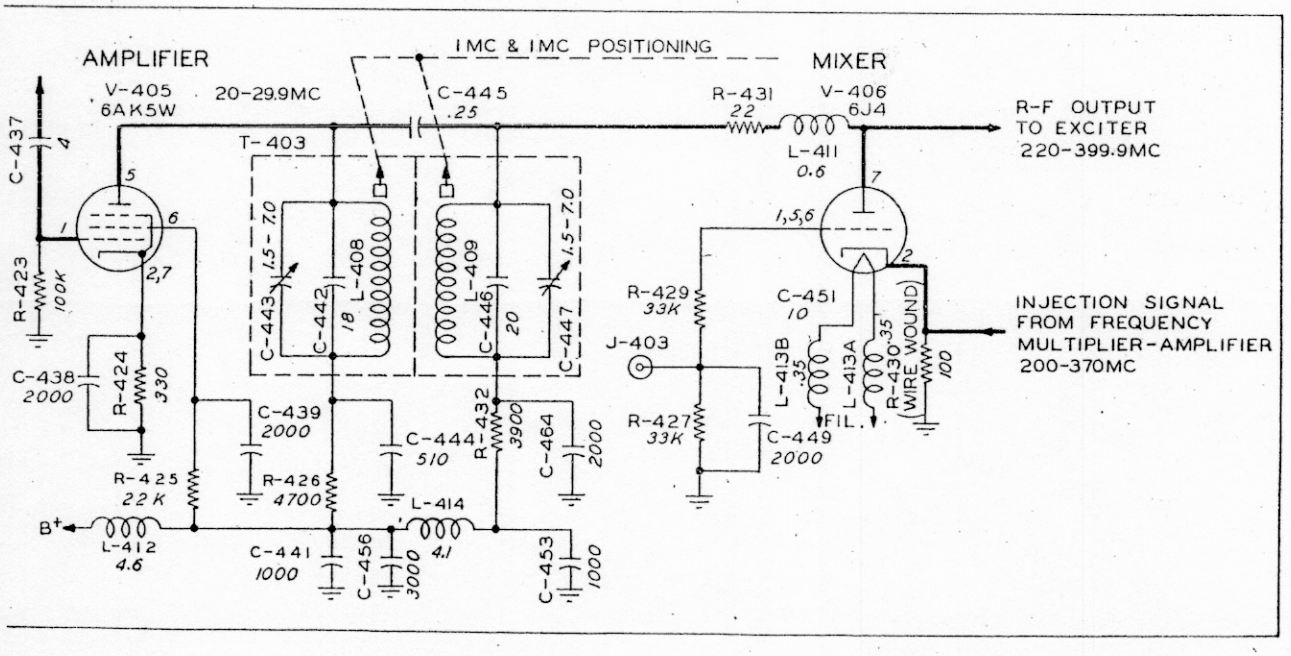

138/5
5/58

Figure 5-8. I-F Oscillator; Second Mixer for Serial Numbers following No. 2331

2.5 Exciter

The r-f signal from the mixer, V-406, is sufficiently amplified in the excite to provide adquate input to the driver stages. (See Figure 5-9.)

Three tuned circuits and two amplifier stages are mounted upon the exciter sub-chassis. Z-101, Z-102 and Z-103 are tuned over the range of 220.5 to 399.5 mc in steps of 1 mc, by the action of a differential driven by the 10 mc and 1 mc autopositioners. Each position of these tuners corresponds to the center frequency in each 1 mc band. These tanks are r-f tuners of the type previously described in the section describing R-F Tuners, and act to discriminate against undesired signals. V-101 and V-102 are grounded grid amplifiers with inputs to their cathodes. Cathode resistors R-101 and R-103 are each 100 ohm wire-wound resistors. The fact that they are wire-wound causes them to look like a high impedance to the uhf signal therefore holding the loading of Z-101 and Z-102 to a minimum. Z-104 and Z-105 are the r-f plate loads to V-101 and V-103 respectively.

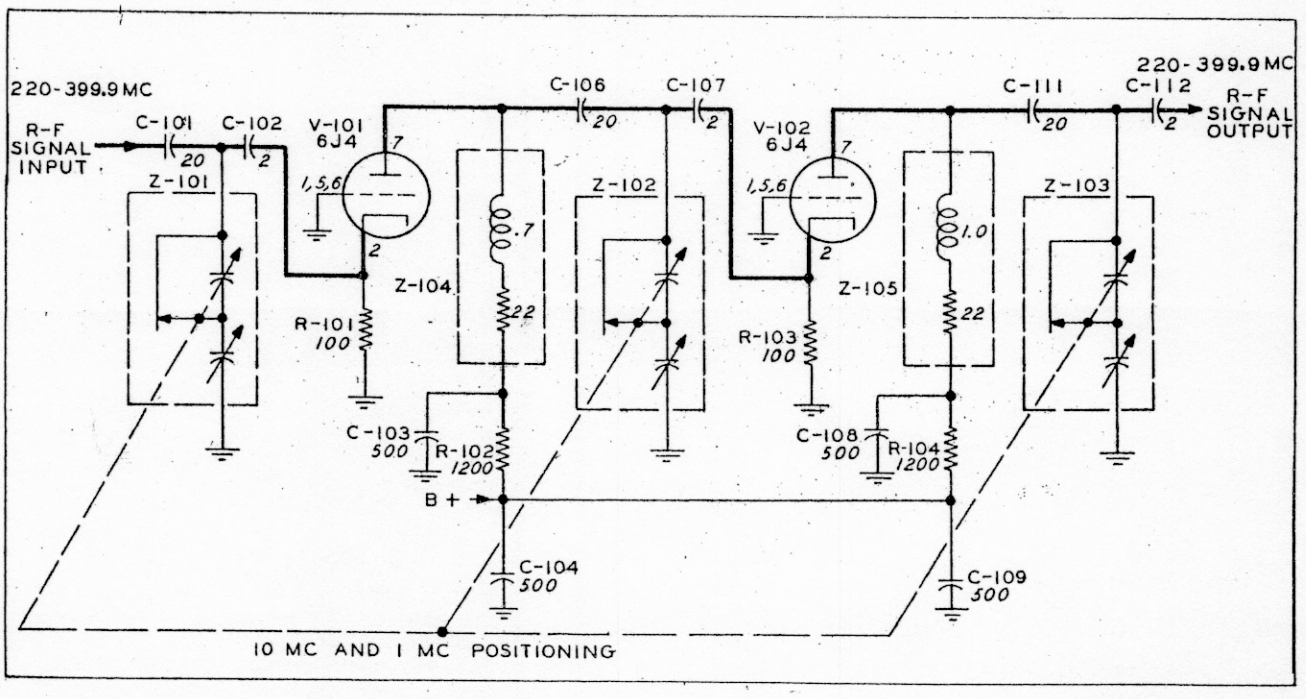

Figure 5-9. Exciter, Simplified Schematic

2.6 Driver

Referring to Figure 5-10, the driver amplifies the output of the exciter and provides approximately 15 watts of uhf power to drive the final power amplifier.

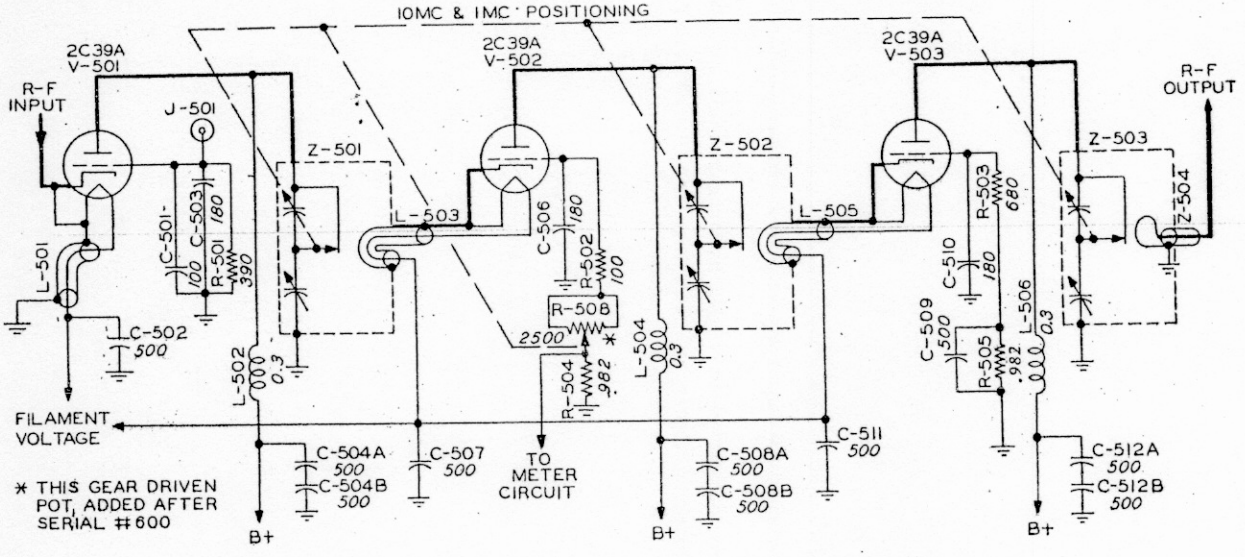

Figure 5-10. Driver, Simplified Schematic

The output from the exciter is coupled to the cathode of V-501, which is the first of three stages mounted upon the driver sub-chassis. V-501, V-502 and V-503 are all grounded grid amplifiers, their plate tanks being Z-501, Z-502 and Z-503, respectively. These tanks are r-f tuners similiar to the type described in the section on R-F Tuners. They are tuned over the range of 220.5 to 399.5 mc in steps of 1 mc, by the action of a differential driven by the 10 mc and 1 mc autopositioners. Each position of these tuners correspond to the center frequency in each 1 mc band. Interstage coupling is accomplished by bringing the concertric filament supply leads, and consequently the cathode loop, into close proximity with the inductance stator rod in the r-f tuners. Output coupling from the driver is provided by a loop, Z504, inserted into Z-503. To cool the tubes, the driver blower forces air into the driver compartment.

The gear driven potentiometer R-508 was added after serial number 600 to provide variable bias on V-502 to attain a more uniform power output.

2.7 Power Amplifier

The function of the power amplifier is to amplify the output of the driver to the required 100 watts output. It is automatically tuned over the frequency range of 220.2 to 399.7 mc by means of a servo amplifier system as explained later. Each position of the tuned circuits in the power amplifier correspond to the center frequency of each 1/2 mc band.

The power amplifier is basically a tuned grid-tuned plate push-pull amplifier operating at Class C, and using two 4X150A beam tetrode tubes. Input to and output from the power amplifier employs inductive coupling in both grid and plate circuits. The plate and grid circuits used are tuners of the parallel line type, which are rolled up for convenience of tuning.

Figure 5-11 is presented as an aid in visualizing the construction of the power amplifier since it is difficult to see in the equipment. Note that the power amplifier is completely enclosed in a box having a transverse partition which separates the grid and plate circuits. Figure 5-11 shows the two 4X150A tubes side by side, mounted on the transverse partition. The grids are coupled through C-602 and C-603 to the grid tuner and the plates are connected directly to the plate tuner. Connection to the screen is made through screen contact fingers. To cool the tubes, the power amplifier blower forces air into the power amplifier compartment. The parallel lines of the grid and plate circuits (tuners) make up about 300 degrees of a circle, one end of which is coupled to the grid or plate and the other end of which is permanently shorted. On these circular segments rides a shorting bar (also called wiping fingers), which is automatically positioned by means of the servo drive system which selects a certain length arc to correspond with the frequency of operation. Accompanying the shorting bar is an injection loop (on the grid side) or a pick-up loop (on the plate side). The grid and plate tuners are geared together by means of a loaded gear train which is part of the power amplifier assembly.

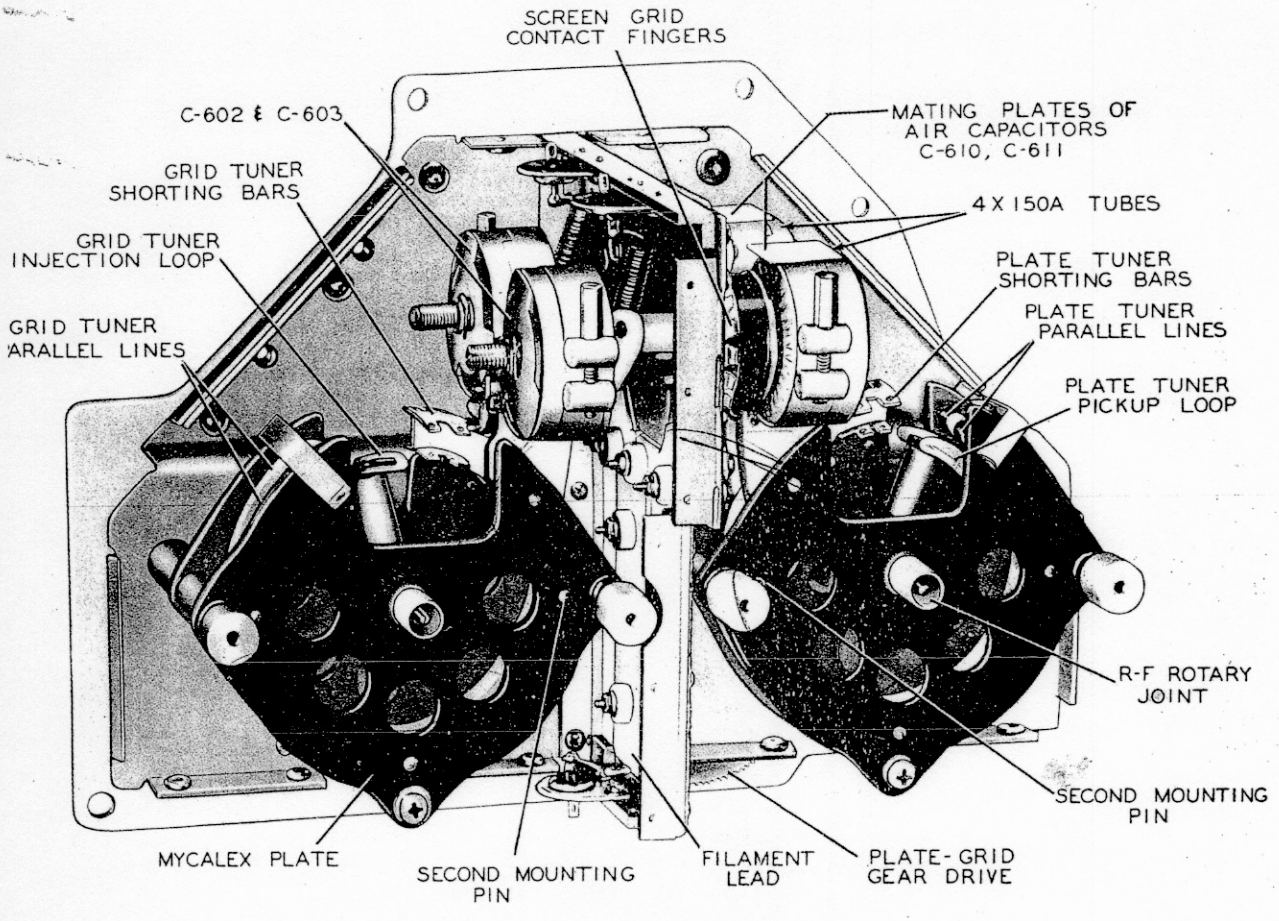

Figure 5-11. Power Amplifier With Side Removed Showing Details of Construction.

A simplified schematic of the power amplifier is shown in Figure 5-12. The two 4X150A grids are capacitively coupled to the grid lines through C-602 and C-603. These are special cylindrical capacitors, constructed to duplicate the distributed capacitive and inductive elements in the plate circuit. This, of course, is to permit accurate tracking of the grid and plate circuits. These grid capacitors are adjustable over a narrow range to aid in tracking. The grid voltage is developed across chokes L-601 and L-602. The grid bias is the sum of -47 volts fixed bias and whatever grid leak bias is developed across R-602 and R-603 by the d-c grid current. Normal bias is about -85 volts, corresponding to about 4 ma grid current per tube. The sum of the grid currents is indicated in the "P.A. Grid" position of the front panel meter.

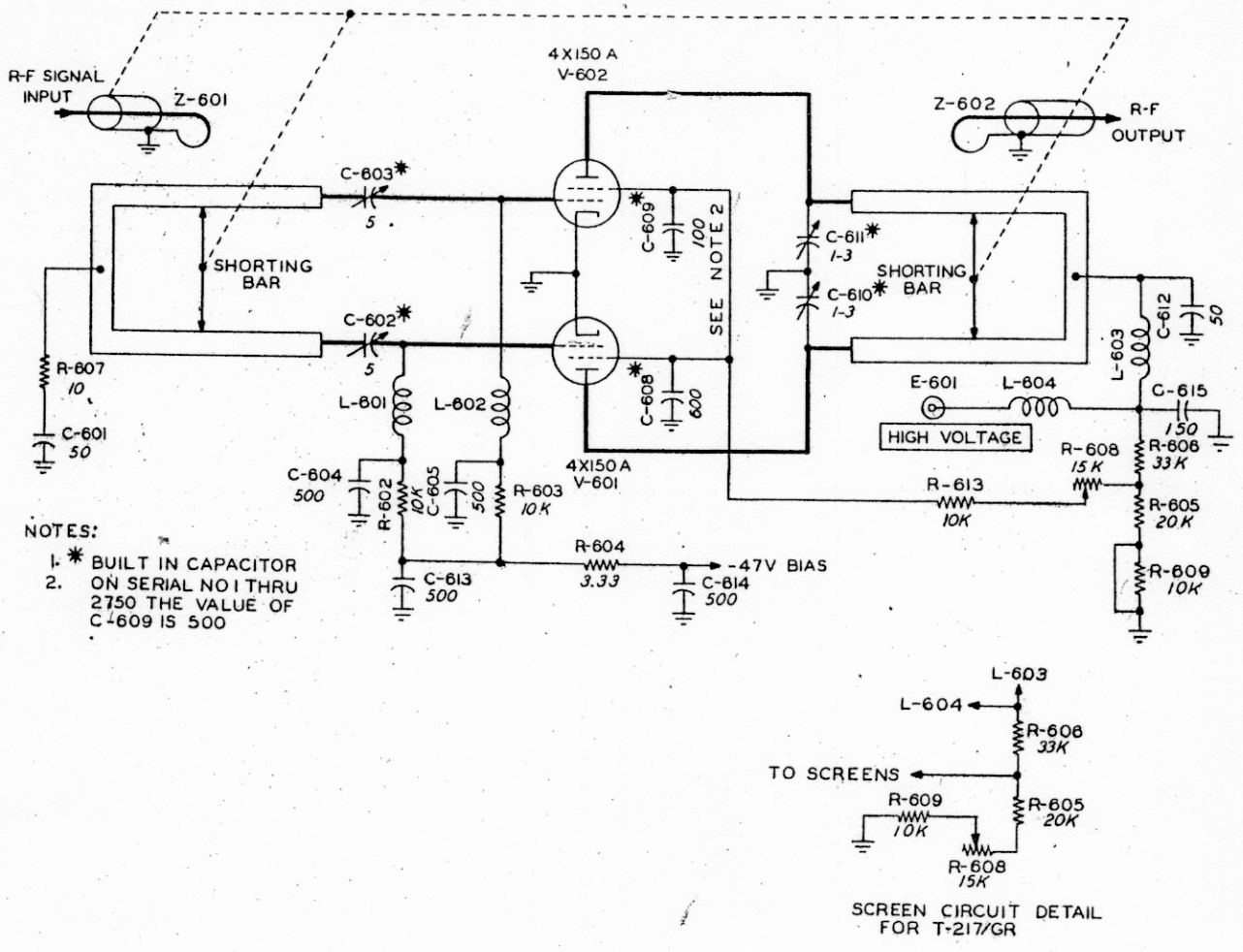

Figure 5-12. Power Amplifier Used in T-217A/GR Simplified Schematic

The screens are supplied with about 250 volts d-c through the bleeder composed of R-605, R-606, R-608 and R-609 and are directly bypassed to ground through a sandwich type capacitor. Control over the screen grid voltage is provided by means of R-608. This potentiometer should be adjusted only after circuit changes have been made, such as changing of the power amplifier tubes or after the power amplifier has been re-aligned. To increase the power output, screen voltage should be increased to a maximum of 300 volts or until there is a maximum of 450 ma plate current. These two conditions should not be exceeded across the frequency range of the equipment. If the adjustment of R-608 can not provide sufficiently high screen voltage or plate current, the bus wire which shorts out R-609 may be clipped. This will increase the screen grid voltage slightly.

The plate lines are attached directly to the plates of the 4X150A tubes by means of low inductance straps. Trimmer capacitors C-610 and C-611 are used for tracking and to compensate for the slight capacity variations when changing tubes. The plate and grid lines are by-passed at the "cold" ends by C-601 and C-612. In addition, a parasitic suppressor R-607 is installed in series with the grid line and its bypass, C-601.

The input and output loops are fastened to the structures carrying the shorting bars. This permits them to be coupled to the low impedance points of the tank circuits at all times which helps in reducing the harmonic output. These loops are mounted on a special piece of coaxial line, which enters the tuning shafts and leave the power amplifier through rotating joints which are terminated in "type N" 52 ohm coaxial connectors. From an operating and maintenance standpoint the most important parts of the power amplifier are the "shorting bars" which are actually made up of eight spring fingers. The position of the short circuit established by these shorting bars determines the resonant frequency of these parallel line tanks. It follows that they must all make positive contact to the line at all times to insure power output and reset accuracy.

2.8 Servo System

Most of the tuning of the transmitter is done directly from the autopositioner output shafts, but since this method of tuning is not adaptable to the power amplifier, a servo system of tuning is used. The servo system is made up on two sub-assemblies, the Servo Amplifier and the Servo Drive.

A servo system is an electrical-mechanical device that translates a mechanical motion or setting into electrical energy which can be amplified any desired amount and then translated back to mechanical energy to perform a certain task. In other words a servo system is an amplifier system for mechanical energy. A servo system depends upon an electrical bridge circuit which has two variable legs. The input leg (a potentiometer) is adjusted by a positioning device, such as an autopositioner in the case of transmitter T-217/GR. Changing the setting of the input leg of the bridge throws the bridge out of balance causing a signal to be applied to the servo amplifier. This signal is amplified any desired amount and the output applied to a servo motor which responds to the amplified signal. The motor runs performing the desired tuning but it also restores the bridge to balance by adjusting the output leg in the bridge circuit. When the bridge is again balanced, there is no longer an error signal applied to the servo amplifier and the servo system is in equilibrium.

2.9 Servo Bridge Circuit

Referring to Figures 5-13 and 5-14, the servo bridge is at first glance not easy to see, but it consists essentially of R-1205 as the input leg, and R-601 as the output leg. A 60 cycle signal is taken from one of the secondaries of T-1202 and impressed across R-1205 which is a wire wound resistor with adjustable taps. Adjacent taps of this resistor are connected to adjacent contacts of S-1202A as shown in Figure 5-15. As the 10 mc autopositioner shaft drives S-1202A, a predetermined portion of R-1205 is picked off by the common contacts of S-1202A. This portion of resistance picked off of

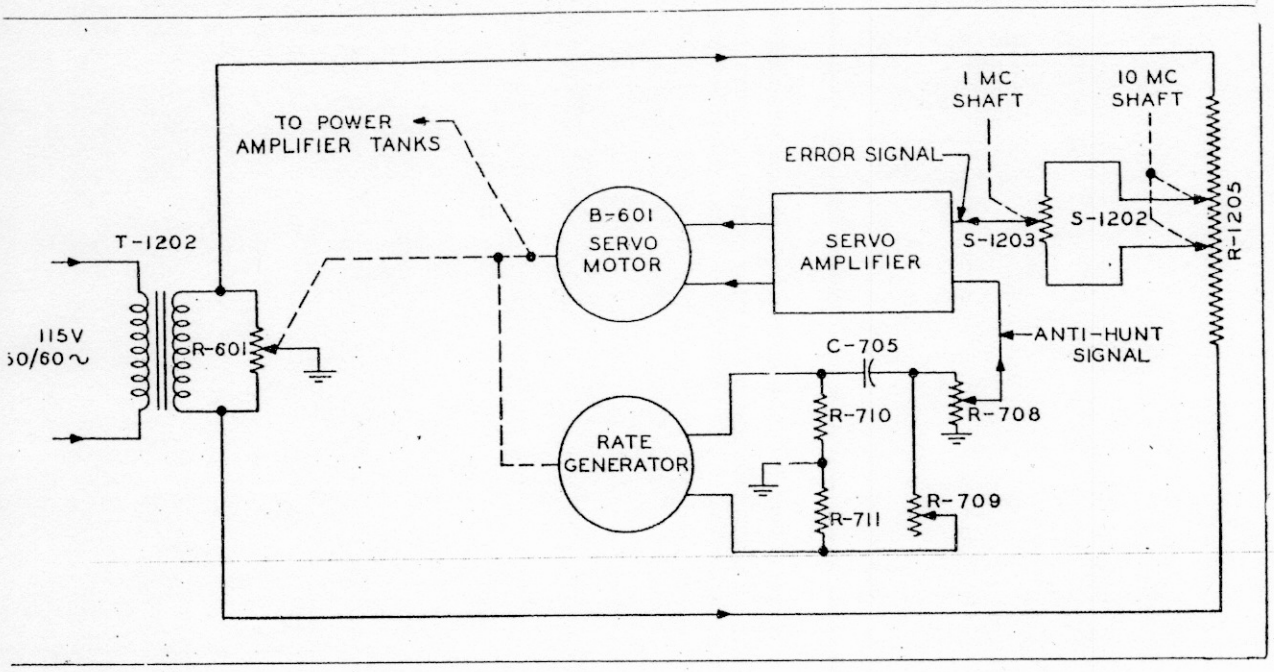

Figure 5-13. Servo System, Block Diagram (Serial Numbers 0 - 1000)

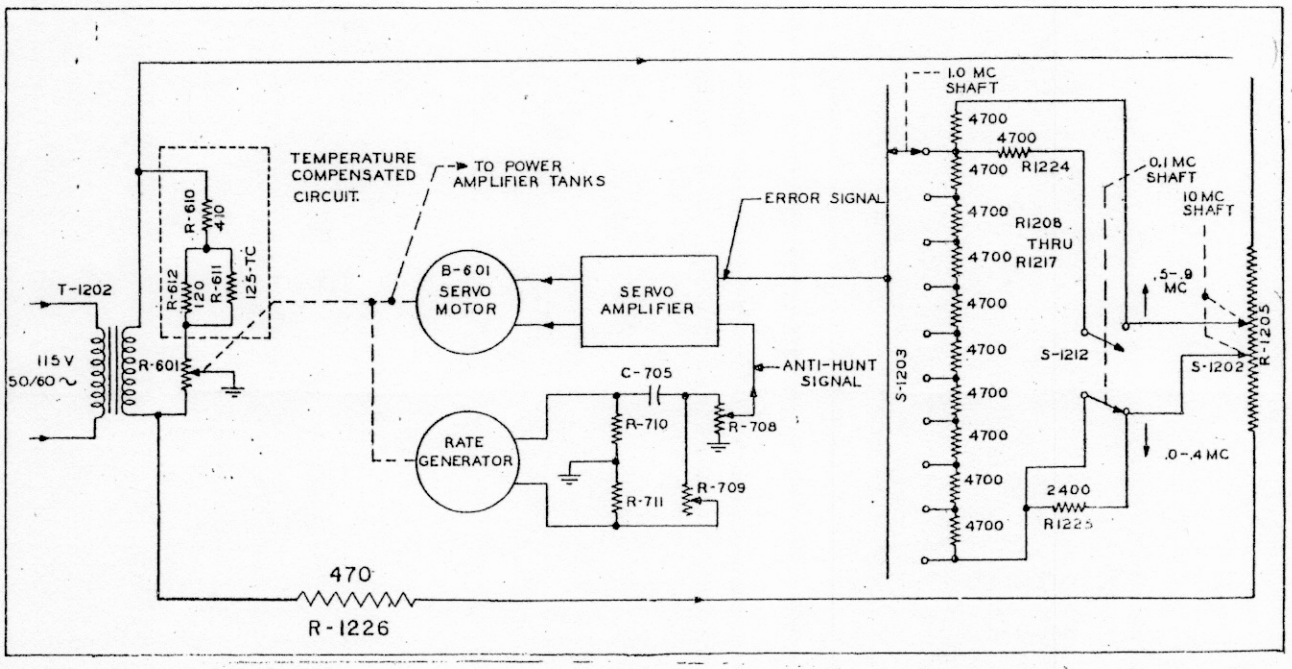

Figure 5-14 Servo System Block Diagram
(Serial Numbers after 1000 approx.)

R-1205 represents a 10 mc range of frequencies as seen by the servo amplifier. As a vernier adjustment to provide 1 mc tuning information, switch S-1203, driven by the 1 mc autopositioner selects a position somewhere along the series of resistors R-1208 through R-1217. One end of this chain of resistors represents the 0.0 mc point while the opposite end represents the 9.0 mc point.

To provide power amplifier tuning at half megacycle intervals, S-1212 and its associated circuits were added on equipments after serial No. 1000. When the 0.1 mc shaft is positioned to any point between 0.0 mc and 0.4 mc, inclusive, the action of S-1203 is exactly as in the original models. When the 0.1 mc shaft is positioned to any point between 0.5 mc and 0.9 mc, R-1225 is placed in series with one end of the 1 mc voltage divider, and R-1224 is placed parallel with R-1217 at the other end. The addition of these resistors does not change the effective resistance of the voltage divider, but does change the electrical position of the taps to provide the same function as would a 20 position voltage divider. At this same serial number the temperature compensating network consisting of R-610, R-611 and R-612 was added. (See Figure 5-14). This network acts to change the value of resistance in one leg of the servo input bridge in a direction suitable to correct the tuning drift of the power amplifier due to temperature change. To maintain balance in the bridge legs R-1226 was added to counter-balance the temperature compensating network.

Across this elaborate system of resistances, selected by the 10 mc, 1 mc and 0.1 mc autopositioners, the 60 cycle voltage is impressed. At any one instant of time one end of this chain of resistances will be positive and the other end will be negative. At some point along the chain (depending on the setting of R-601) there will be a null point or ground. The servo amplifier is looking for this null point and adjusts R-601 to it. When R-601 is adjusted to the null point the error signal is removed from the servo amplifier.

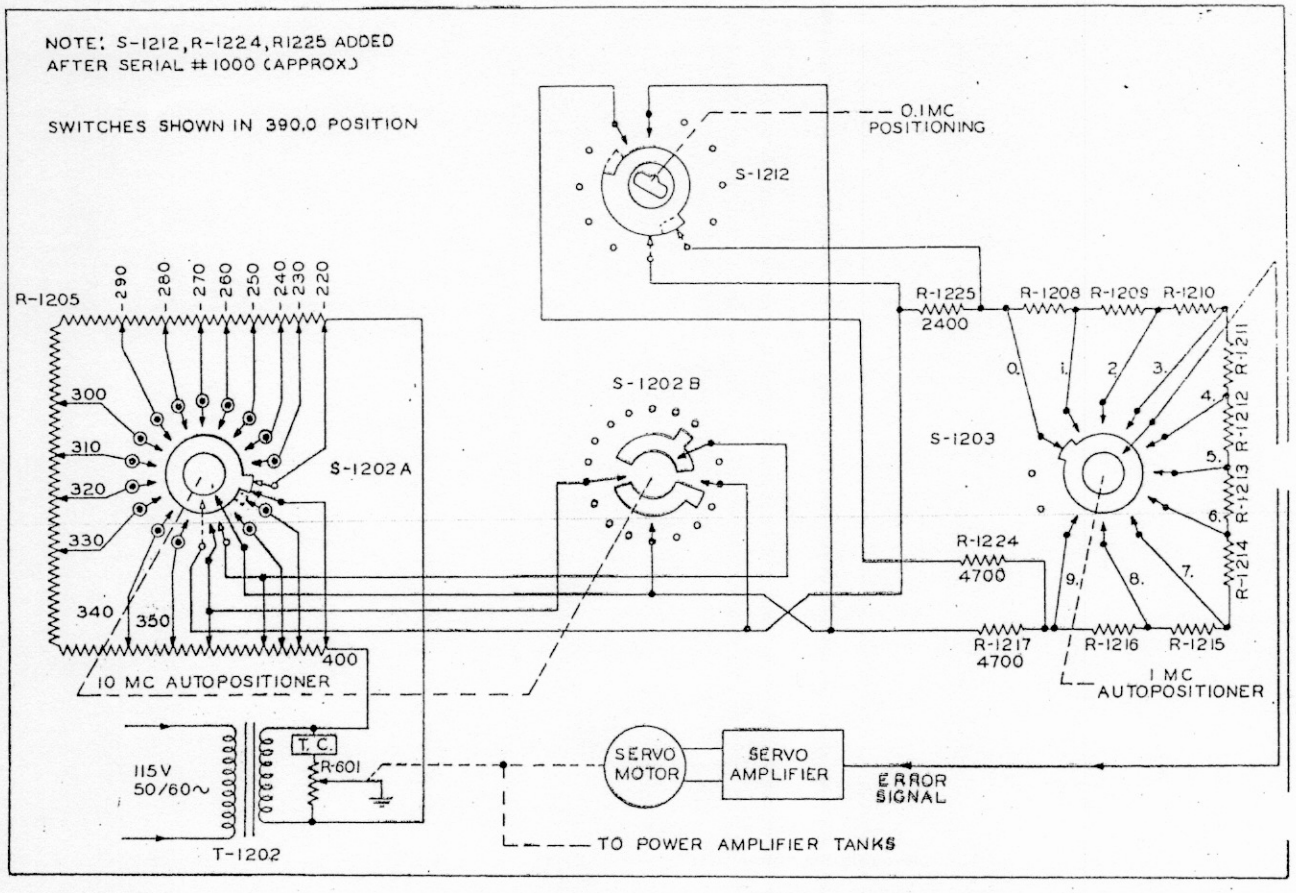

Figure 5-15. Servo Input, Simplified Schematic (Serial Numbers after 1000 approx.)

2.10 Servo Amplifier

Referring to Figure 5-16, the 60 cycle signal appearing at the common contact of S-1203 is applied through R-701 to the grid of the first stage of the servo amplifier, V-701A. The output from V-701A is taken from a resistance-capacitance phase shifter made up of R-704 and C-704. Since the signal voltage appearing at the cathode is 180 degrees out of phase with that appearing at the plate, the phase of the output of the voltage divider may be varied over a wide range by varying R-704.

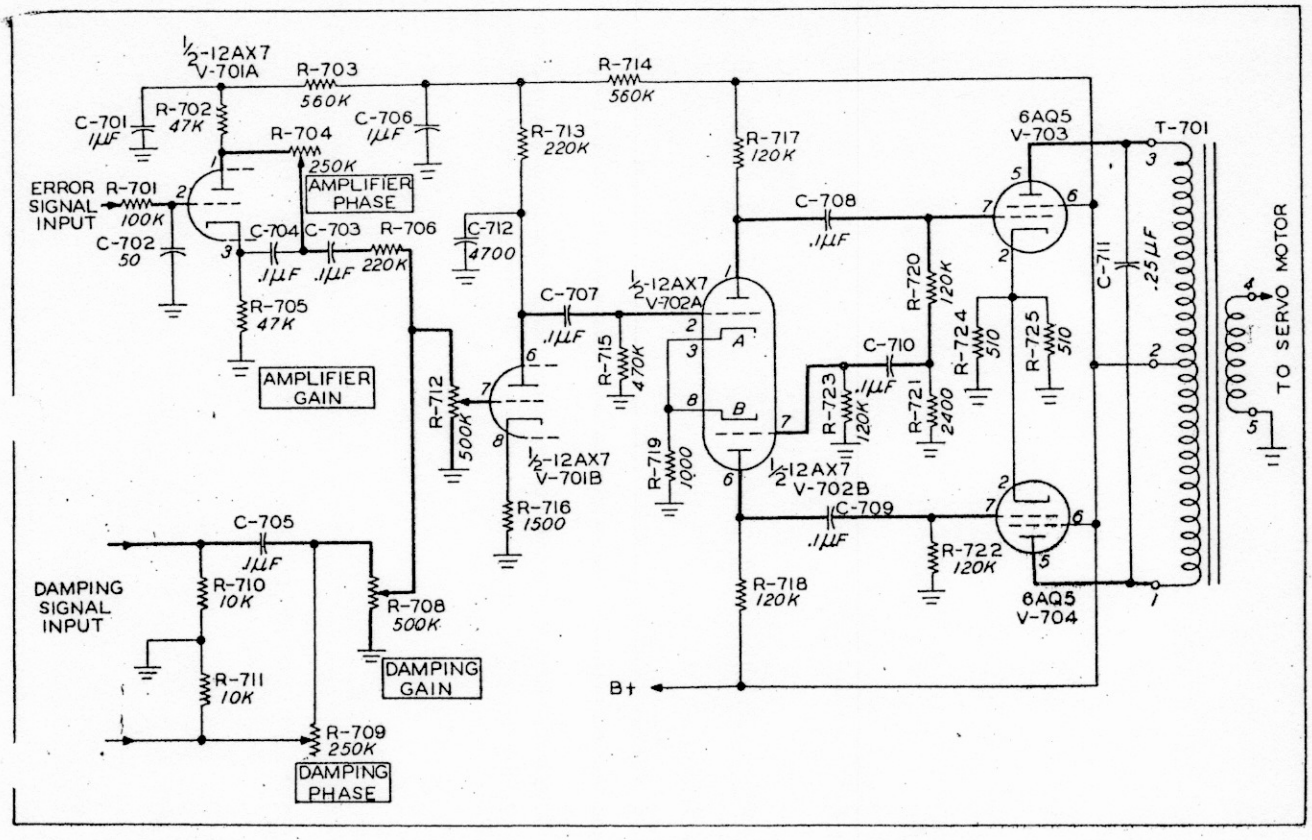

Figure 5-16. Servo Amplifier, Simplified Schematic

R-704 is adjusted to provide a 90 degree signal for the control phase on the motor. This signal is coupled to the mixing resistor, R-712, which is the grid resistor of V-701B.

A negative feed-back voltage, used as an anti-hunt signal, obtained from the rate generator on the servo motor, is also applied to the mixing resistor, R-712. The phase of this feed-back voltage is adjusted by varying R-709, and its amplitude is controlled by R-708.

The combined value of these two 60 cycle signals appears across R-712 and the amplitude of the resultant voltage appearing at the grid of V-701B is determined by the setting of the movable arm of this potentiometer. Output from V-701B is coupled through C-707 to the grid of V-702A where it is amplified before being applied to V-703 through C-708. A portion of the signal appearing at the grid of V-703 is selected by a voltage divider consisting of R-720 and R-721, and coupled back to the grid of V-702B through C-710.

The signal output from V-702B, coupled to the grid of V-704 through C-709, is of the proper phase and amplitude to drive V-704 in push-pull operation with V-703. The primary of the output transformer, T-701, appears as the plate load to this push-pull stage, and the secondary voltage is used to drive the servo motor, B-601.

2.11 Servo Drive

The stators of both the servo motor and the rate generator are excited by a 60 cycle voltage taken from the primary of T-1202. The output voltage from the servo amplifier acts to excite the rotor of the servo motor, B-601, causing the motor to run. As the servo motor turns, it serves three functions; (1) it tunes the plate and grid tanks of the power amplifier; (2) it rotates the center arm of R-601, and (3) it turns the rotor of the rate generator. This rate generator forms the negative feed-back loop that was mentioned in the discussion of the Servo Amplifier. The 60 cycle output of this rate generator is directly proportional to the speed of its rotation and the phase of the output voltage depends upon the direction of rotation, hence, the faster it is being rotated by the servo motor, the greater will be the feed-back in opposition to the 60 cycle signal voltage developed at the output of V-701A. The speed of the servo motor, and consequently the amplitude of the negative feed-back to the amplifier, are limited by the torque in the driven elements. With large values of error signal there is no change in the speed of the servo motor for a change in error signal. (See Figure 5-17). The effective error signal is the algebraic sum of the original error signal and the negative feed-back voltage.

Near the null point these two voltages cancel and the effective error signal is zero. The servo motor will therefore stop turning without hunting back and forth about the null point.

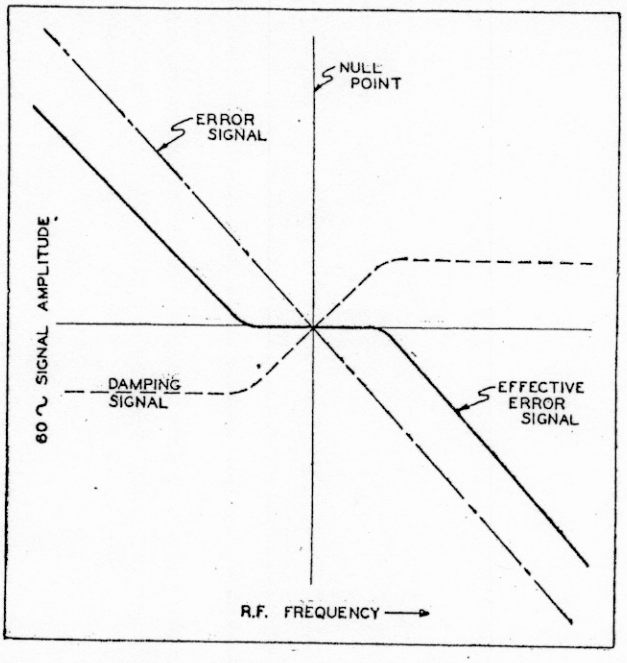

Figure 5-17. Servo Error Signal Graph

Since the amplitude and phase of the error signal at the grid of V-701A depends upon the position of the arm of R-601 for any given setting of the 0.1 mc, 1 mc, and 10 mc autopositioners, the servo motor will turn, moving the arm of R-601, until this error signal voltage drops to zero.

2.12 Output Network

Referring to Figure 5-30, the output of the power amplifier is available at the coaxial connector J-602. This output if fed through the coaxial cable, W-1201 to the low pass filter Z-1201. This is a coaxial filter employing five tuned stubs to discriminate against frequencies above 450 mc.

The output of this filter is connected to the R-F Power Monitor. Here two directional couplers are used to give two sampling voltages. The output from one of these directional couplers serves to indicate power output, supply an input to the Monitor Amplifier, and is used in the calibration of the standing wave ratio indicator. The output from the other directional coupler provides standing wave ratio indication in conjunction with M-1201 by measuring reflected power.

The output of the R-F Power Monitor is connected through coaxial cable W-1202 to the antenna transfer relay K-1203. This is a coaxial relay, and works in conjunction with the push-to-talk circuit, transferring the antenna from the receiver coaxial connector, J-1213 to the transmitter coaxial cable, W-1202 when the push-to-talk circuit is energized. The circuitry is so arranged that the antenna is transferred before the high voltage is applied. The movable contact of K-1203 is connected to the movable contact of the antenna selector relay, K-1204. This is another coaxial relay and acts to connect W-1203 to either the directional or the omni-directional antenna.

2.13 Monitor Amplifier

Referring to Figure 5-18, a portion of the output voltage of the directional coupler, which samples forward power and is incorporated into the R-F Power Monitor, is used as the input to the Monitor Amplifier.

This input signal is connected to the grid of half of V-1301 through C-1301. Potentiometer R-1301 controls the level of the signal at the input grid. The output of this first stage is coupled to the grid of the second half of V-1301 through C-1302. This second stage acts as a phase inverter to drive the push-pull output stage with outputs being taken from both the plate and cathode circuits. These outputs are coupled to the two halves of V-1302 through C-1303 and C-1304, respectively. Output transformer T-1301 has a split and balanced secondary. The two halves of this secondary are connected in series

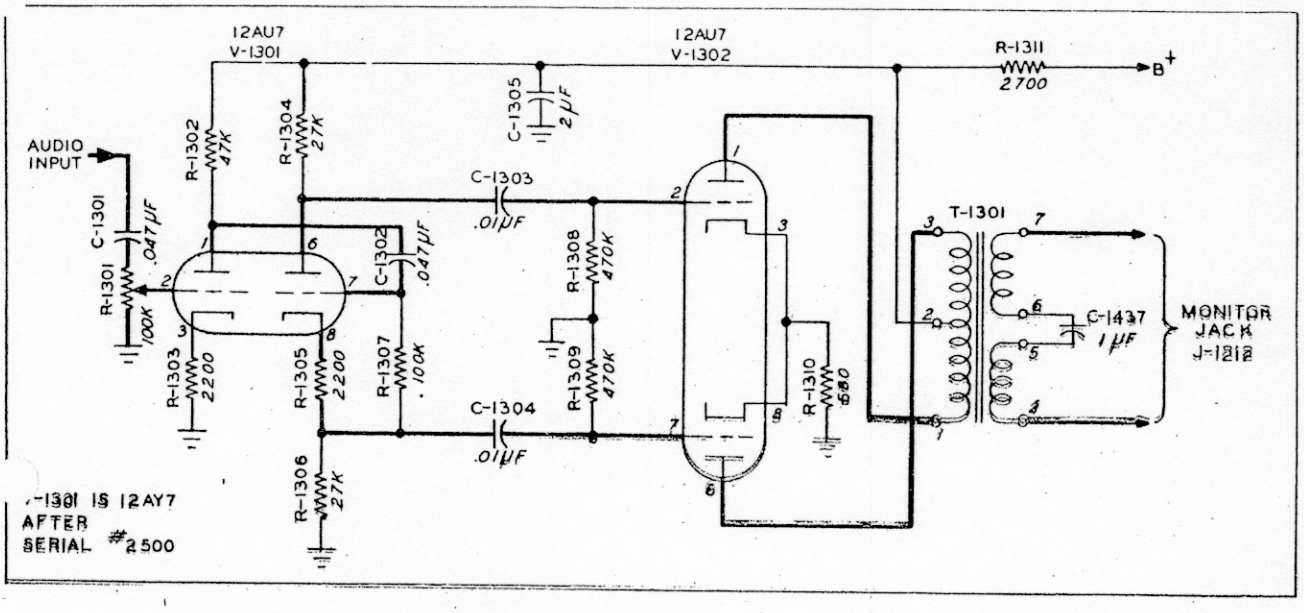

Figure 5-18. Monitor Amplifier, Simplified Schematic

through a capacitor, C-1437, in the Modulator-Power. The 600 ohm output from this secondary circuit is impressed across the monitor jack, J-1212 and is also made available to the local control unit through connection to the Modulator-Power Supply.

2.14 Modulator-Power Supply

The MD-129/GR Modulator-Power Supply illustrated in Figure 5-26, serves two main functions. It provides all necessary power to Transmitter T-217/GR and it modulates the transmitter. With the advent of the continuous duty version of the transmitter, T-217A/GR, it was found necessary to increase the capabilities of the modulator-power supply. The Modulator-Power Supply MD-129A/GR includes a re-designed high voltage power supply which produces a high voltage output (approximately 900 to 1000 volts depending on conditions of loading, etc). Also included is another intake fan. Air is drawn in through the two louvers on the front panel and is exhausted through a screen on the rear of the case and side openings.

2.15 Power Supply Block Diagram

Refer to Figure 5-19 for the power supply block diagram. Note the four power supplies; low voltage, bias, relay, and high voltage, the four being supplied by three transformers. The filament transformer has primary power applied as soon as the main switch is thrown. The low voltage transformer depends on a time relay and case interlocks and the high voltage transformer depends on the bias interlock and the push-to-talk relay to be closed before primary power is applied to them.

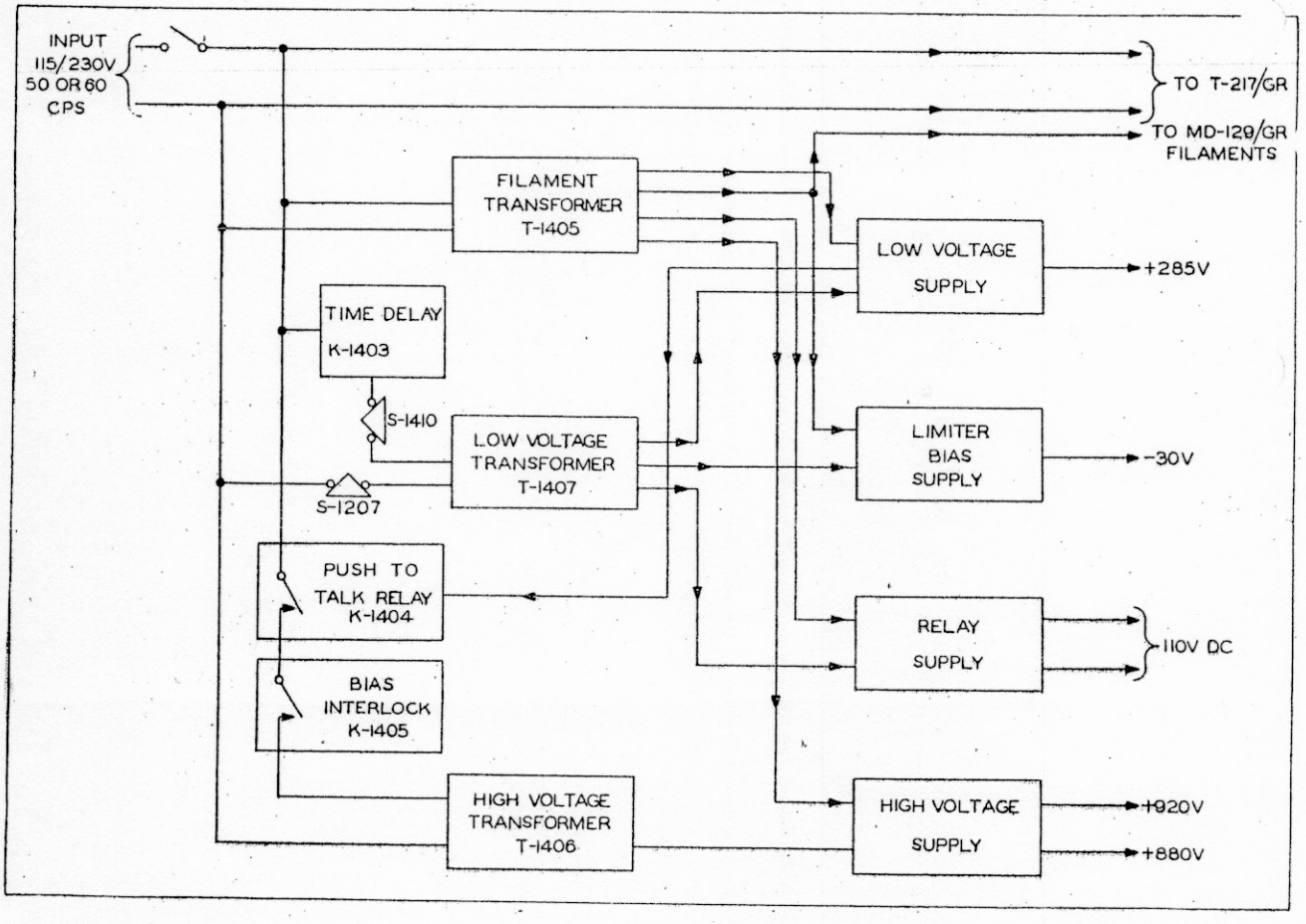

Figure 5-19. Power Supply, Block Diagram

2.16 Power Input Circuit

Refer to Figure 5-20 for the partial schematic of the power supply. An input voltage of either 115 or 230 volts at either 50 or 60 cycles is required to operate the equipment. S-1401 is the main power on-off switch. On MD-129A/GR a cam driven switch, S-1401B, opens the other power input line. The ganged switches S-1407, S-1408 and S-1409 act to connect the split primaries of T-1405, T-1406 and T-1407 in either series or parallel, depending upon the input voltage. S-1406, also ganged with S-1407, S-1408 and S-1409 serves to select the proper number of turns on the overload trip mechanism in S-1401, for the supply voltage used.

2.17 Filament Supply

Referring to Figure 5-20, the filament transformer, T-1405, has four secondaries. One of these secondaries supplies filament power for the audio section of Modulator-Power Supply MD-129/GR and for the limiter bias rectifier tubes; one secondary supplies filament power for the high voltage rectifier tubes, one secondary supplies filament power for the low voltage rectifier tubes and the fourth secondary supplies filament power for the relay rectifier.

2.18 Low Voltage Supply

Referring to Figure 5-20, the low voltage transformer, T-1407, is excited through the contacts of the thermal time delay relay, K-1403, and the interlock switches, S-1401 and S-1207. K-1403 allows the filaments to warm sufficiently before the application of plate voltage to the rectifiers, while S-1410 and S-1207 make it impossible to accidentally excite the power transformers while either MD-129/GR or T-217/GR is outside of its dust cover. Two type 3B28 tubes, V-1415 and V-1416, serve as full wave, low voltage rectifiers. The low voltage filter is composed of two sections. The first section consists of the parallel tuned circuit L-1403 and C-1431, followed

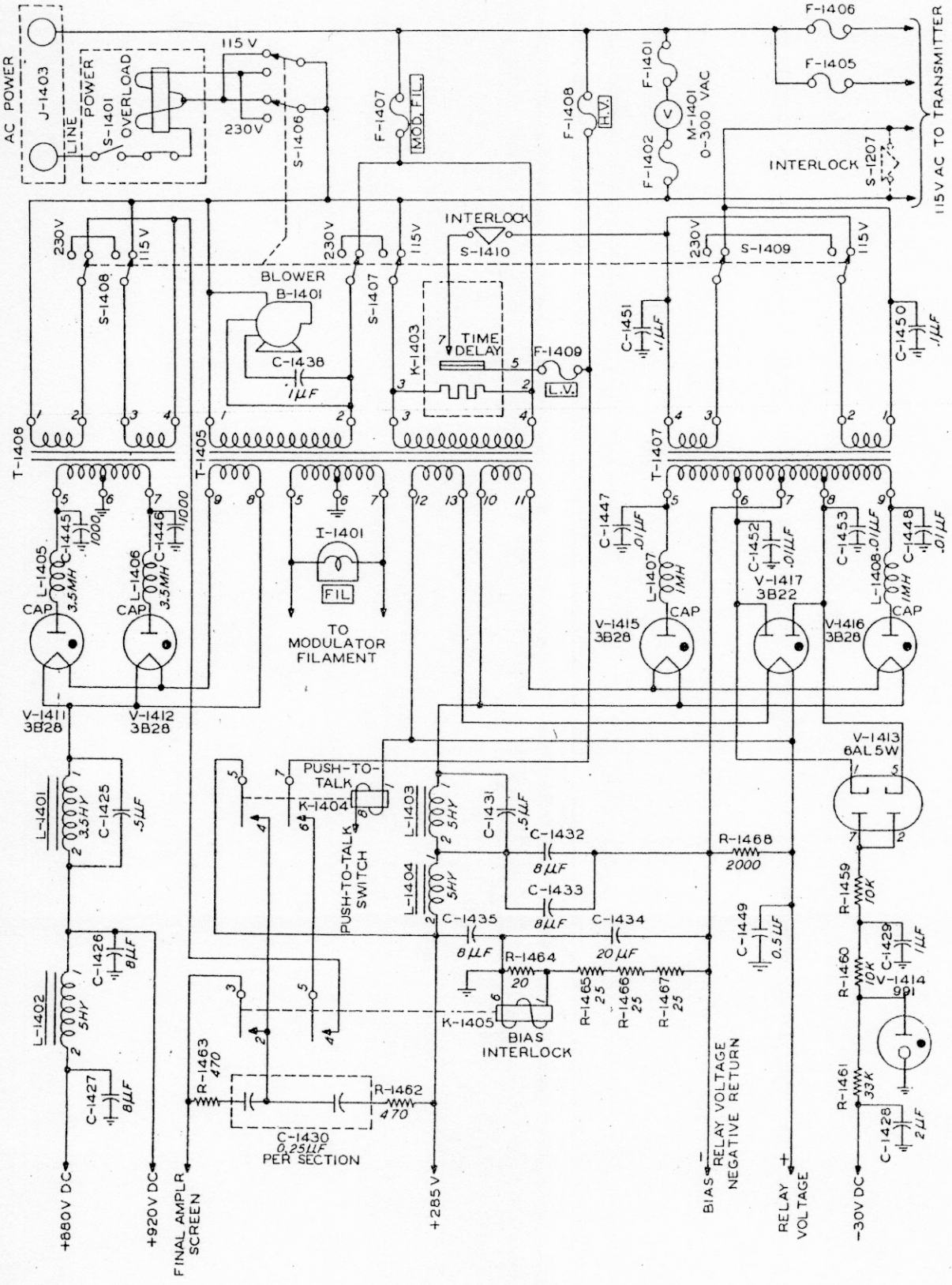

138/5
5/58

Figure 5-20. Power Supply, Partial Schematic

by two eight microfarad capacitors, C-1432 and C-1433 in parallel. L-1403 and C-1431 give maximum attenuation to the ripple frequency. C-1432 and C-1433 are returned to the center tap of the low voltage transformer, T-1407. The second filter section consists of L-1404 and C-1435.

Referring to Figure 5-20 and Figure 5-29, Power and Control Circuits Simplified Schematic, with the push-to-talk relay, K-1404, de-energized, this 285 volt supply is connected only to the servo amplifier in the transmitter, which draws about 100 ma. from the supply. Since this current flows through the series resistors R-1464, R-1465, R-1466 and R-1467, the center tap of T-1407 is at a negative potential of slightly less than nine volts. The coil of the bias interlock relay, K-1405, is in parallel with R-1464. The resistance of this coil is approximately 27 ohms and it requires 200 ma. to actuate the relay, therefore the total output current from the 285 volt supply must be about 470 ma. before K-1405 will become energized.

With the push-to-talk relay energized, the 285 volt supply is connected to all of the 285 volt circuits except the screens of the modulator tubes, V-1407 and V-1408. The total output current from the supply is now increased to a value in excess of the 470 ma. required to close K-1405. As K-1405 closes, the 285 volt supply is connected to the screens of the modulator tubes. The high voltage transformer, T-1406, is excited through the contacts of K-1404 and K-1405. With all the 285 volt circuits connected to the supply, the total current through the series resistors R-1464, R-1465, R-1466 and R-1467 is increased to approximately 550 ma. This places the center tap of T-1407 at a negative potential of about 47 volts. This negative 47 volts is used as the bias supply.

2.19 Relay Supply

Referring to Figure 5-20, a second rectifier supplied by the low voltage transformer provides the necessary 110 volts for operation of the relays. This is a type 3B22 tube, V-1417, operating as a full wave rectifier, the output of which is left unfiltered. Since the potential at the center tap of

T-1407 varies between a negative 9 and a negative 47 volts, the positive or cathode side of the rectifier will vary between 100 and 62 volts, but the total voltage between cathode and center tap will remain essentially constant at 110 volts. R-1468 acts as a bleeder, drawing about 55 ma.

2.20 Limiter Bias Supply

Referring to Figure 5-20, the third rectifier associated with the low voltage transformer provides a regulated 30 volts bias for the limiter incorporated within the audio section of MD-129/GR. A 6AL5W, V-1413, acts as a full wave rectifier with the cathodes connected to T-1407. R-1459 and R-1460 are voltage dropping resistors while a type 991 tube, V-1414, serves as a voltage regulator. C-1429 serves as a filter capacitor, further reducing the ripple voltage.

2.21 High Voltage Supply

Referring to Figure 5-20, the primary of the high voltage transformer, T-1406, is excited through the contacts of K-1404 and K-1405. Two type 3B28 tubes, operating as a full wave rectifier, are connected to the secondary. The first filter section is composed of L-1401, C-1425 and C-1426. L-1401 and C-1425 are parallel tuned to give a high impedance to the ripple frequency, while C-1426 acts as a low impedance to this frequency. The 920 volt supply for the modulator plates is taken off after the first filter section. The second filter section composed of L-1402 and C-1427 further filters this high voltage for the 880 volt supply to the transmitter. Referring to Figure 5-31, this circuit passes through one secondary of the modulation transformer, T-1404, before going to J-1406 and on to the transmitter. In MD-129A/GR the safety switch S-1411 was added to short out the high voltage capacitors when the unit is removed from the case.

2.22 Audio Section

The audio amplifier employed is capable of amplifying signals from a level of minus 45 dbm to a level sufficient to modulate the transmitter up to 95%.

Two audio bandwidths are provided by the use of a bandpass filter for narrow bandwidth, and omission of this same filter for broad bandwidth. The limiter employed has been designed to allow not more than two db increase in output for a 20 db increase in input power.

Referring to Figure 5-21, the input audio transformer, T-1401, has two separate primary windings. Winding 1-2 is used only for microphone input from J-1401. When the microphone is plugged into J-1401 and the push-to-talk button pressed, relay K-1401 becomes energized to turn the transmitter carrier on.

The second winding 3-4-5-6, designed for remote control operation provides 600 ohms termination for the remote microphone and serves as a split and balanced input from E-1401 and E-1402 or from terminals G and H of J-1404. Normally the NORMAL-EMERG switch S-1402 is in the NORMAL position in which case this second primary winding is used only for audio frequency voltage. In this case another pair of wires closes a circuit which causes the transmitter carrier to be turned on. However, a single pair of wires to a remote control unit can be used to perform both functions if S-1402 is placed in the EMERG position. The ground circuit to operate K-1401 is then completed through both sections of S-1402 and through the remote microphone when the push-to-talk button is pressed.

Two tubes, V-1418 and V-1419, on serial numbers 0-2950 are used as voltage limiters to limit the voltage appearing across the line to less than 140 volts when S-1402 is in the EMERG position. Closing of the contacts on K-1401 also applies a negative voltage to the grids of these tubes to stop them from drawing current. Circuit constants are such that the voltage across C-1436 is just slightly less when the remote microphone push-to-talk switch is closed then when it is not closed.

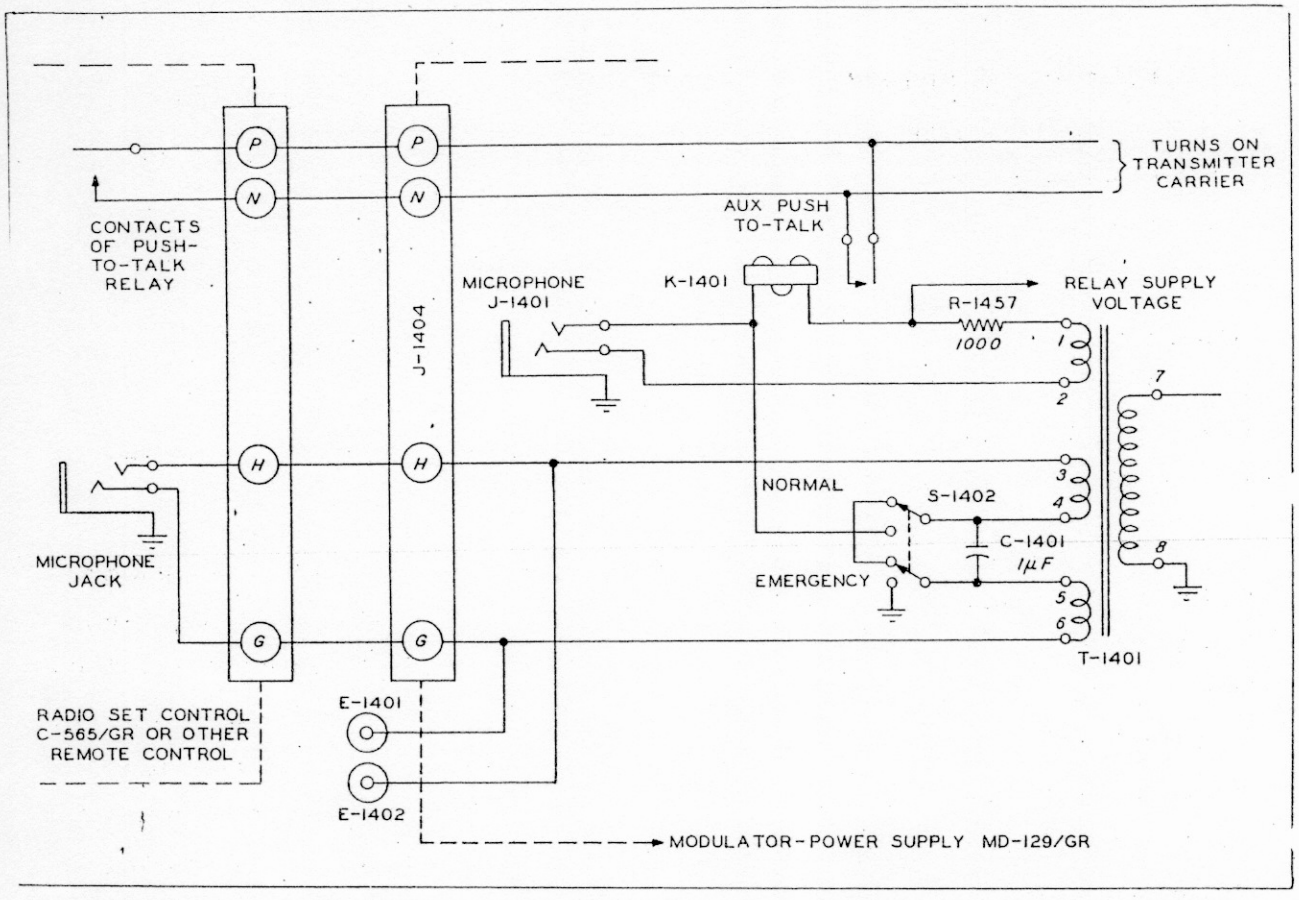

Figure 5-21. Input Circuit to Audio Transformer

Referring to Figure 5-31, the secondary of the input transformer T-1401 is connected to the grid of the first amplifier stage, half of V-1401, through the dual potentiometer, R-1401, which serves as the AUDIO GAIN control. This two section potentiometer provides the necessary attenuation for both high and low level inputs.

The output from this first half of V-1401 is taken from the plate circuit and coupled through C-1404 to the grid of the second half of the same tube. The bandpass filter, Z-1401, narrows the bandwidth to 400-3,000 cps. With S-1403 in the BROAD position, this bandpass filter is by-passed and the bandwidth is increased to 200-20,000 cps.

The output from this second triode section, as it appears across R-1407, is coupled to the primary of the inter-stage transformer, T-1402, through the limiter.

The output from T-1402 drives the two halves of V-1403 in push-pull, and the output from this stage drives the two halves of V-1404 in push-pull. V-1405 and V-1406 are driven by the two halves of V-1404 and also operate in push-pull. Two negative feedback loops, one composed of R-1430 and C-1411, and the other composed of R-1431 and C-1412, couple from the plates of V-1405 and V-1406 respectively, back to the cathodes of V-1404 to improve the frequency response and minimize distortion of the amplifier.

Coupling between the push-pull stage consisting of V-1405 and V-1406, and the modulator output stage, V-1407 and V-1408, is through T-1403. C-1416 and C-1417, connecting primary to secondary of T-1403, act to minimize the high frequency distortion of the amplifier.

The push-pull output stage, consisting of V-1407 and V-1408, works into the output transformer T-1404. Three separate secondaries are employed on this transformer. One secondary carries the high voltage for the transmitter and consequently supplies the modulation for the transmitter. The second secondary winding is center tapped, and supplies a balanced audio output of up to 50 watts across 600 ohms to the auxiliary connector J-1405. The third secondary winding on T-1404 supplies the signal for the limiter rectifier described in the next section.

A portion of the modulated high voltage output at J-1406 is rectified by V-1410 and serves in conjunction with M-1402 to indicate percentage of modulation.

2.23 Limiter

In order to provide a uniformly high output from the modulator, and consequently insure a constant and high level of modulation without the possibility of over modulation, a limiter is used. This limiter is essentially a self balancing bridge in a compressor circuit and, when properly adjusted, will permit only about a two db increase in output from the amplifier for a 20 db increase in input voltage.

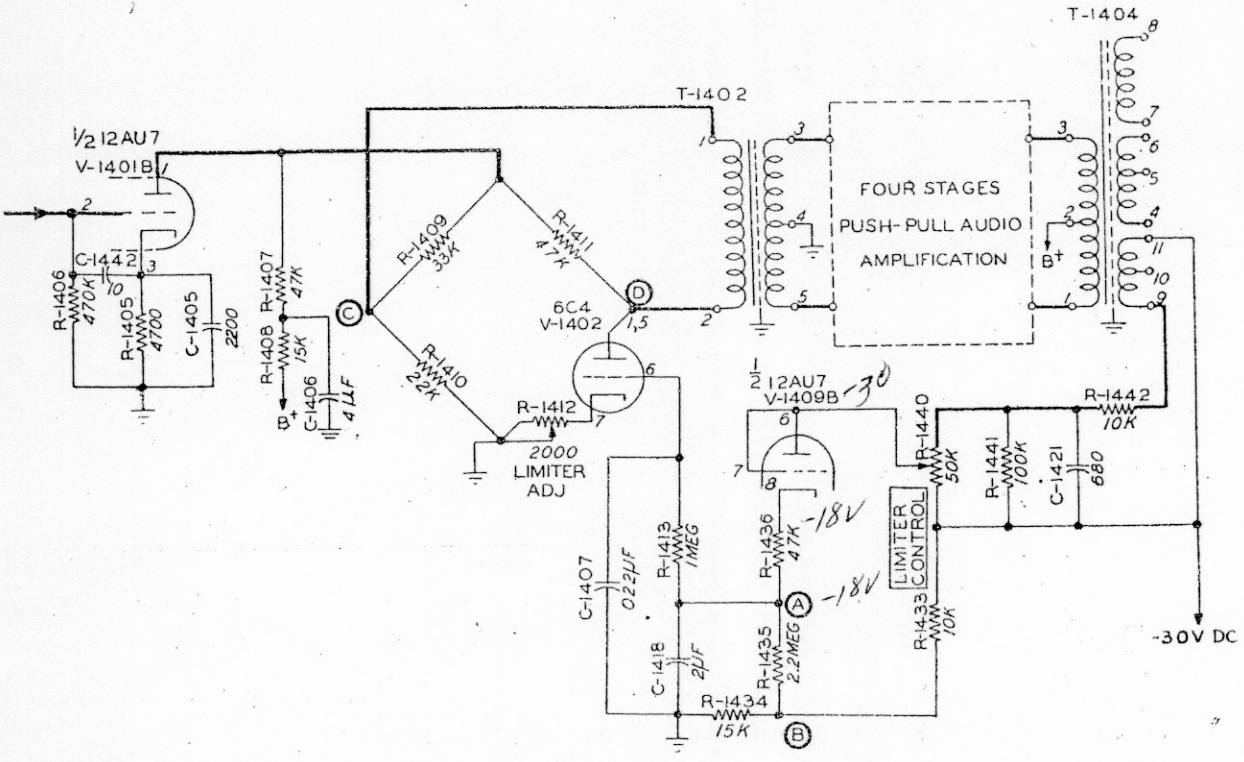

Figure 5-22. Modulator Limiter, Simplified Schematic

As may be seen in Figure 5-22, the output from the second half of V-1401 is impressed across the bridge in one direction, and the interstage transformer, T-1402, is connected to the output of the bridge. The leg of the bridge containing V-1402 is actually the variable impedance element. Below the threshold of compression, this tube is operating near cut-off because of the bias on the grid. This bias, or the voltage at point "A", is determined by two factors: the voltage at point "B" on the voltage divider across the negative 30 volt supply, and the amount of conduction through V-1409. The amount of conduction of V-1409 is a function of the difference between cathode and plate voltages. The voltage on the plate of this tube is a function of the magnitude of the signal appearing on T-1404. As the voltage on T-1404 increases, conduction in V-1409 will increase,

and consequently the amount of compression will increase. The voltage at point "B" is approximately negative 18 volts due to the values of R-1433 and R-1434. The voltage at point "A" will vary between this value when V-1409 is not conducting to a value of approximately negative six volts for full compression. (Since this is a high impedance circuit, this voltage cannot be readily measured. Any attempt to measure this voltage will distrub the operation of the limiter).

The threshold of compression may be adjusted by R-1440. C-1418 acts to filter the voltage at point "A" while C-1407 further filters the actual signal on the grid of V-1402. R-1412 is used to adjust the compression to the specified two db increase of output for 20 db increase in input voltage, and to compensate for tube variations in V-1402.

The voltage appearing across the primary winding of T-1402 is the voltage between points "C" and "D" in Figure 5-22. The voltage from point "C" to ground is approximately two-fifths of the output voltage of V-1401 because of the values of R-1409 and R-1410. The voltage from point "D" to ground is slightly less than the output voltage of V-1401. Hence, the voltage from C to D impressed on the primary of transformer T-1402 is approximately one-half of the output voltage of V-1401 when V-1409 is not conducting.

When R-1440 is adjusted for the threshold of compression, any increase in output will cause a positive voltage to be impressed on the negative grid voltage of V-1402 due to rectification of V-1409. This means less negative grid bias on V-1402, and in turn means a lowered internal resistance from plate to cathode of V-1402. Lowering the internal resistance of V-1402 reduces the voltage from point "D" to ground, which reduces the voltage impressed across the primary of T-1402, which tends to reduce the output voltage of the modulator. Circuit constants in the bridge, consisting of R-1409, R-1410, R-1411 and V-1402, and the rectifier consisting of V-1409 and filter elements, are such that a 20 db increase in input level will result in only a 2 db increase in output level when R-1440 is adjusted for the threshold of compression at the lower input level.

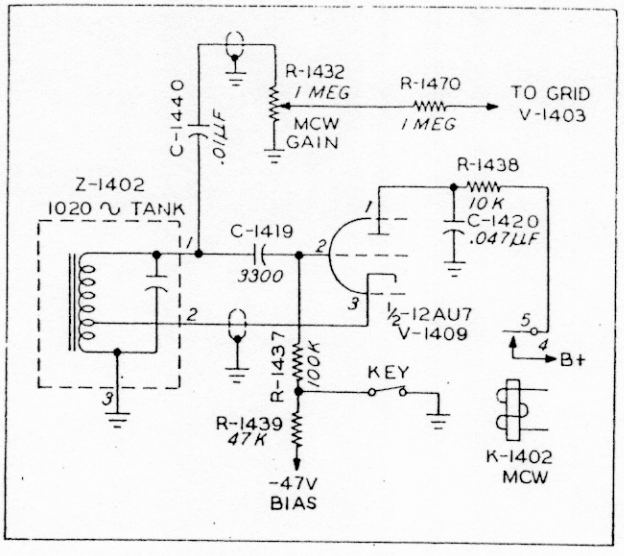

Figure 5-23. MCW Oscillator, Simplified Schematic

2.24 MCW Oscillator

Referring to Figure 5-23, the second half of V-1409 is used in a audio oscillator circuit to provide a 1020 cycle tone for MCW operation. Operation of the VOICE-MCW CARRIER ON switch, S-1404, to the MCW CARRIER ON position energizes K-1404 and the MCW relay K-1402. As the MCW relay is energized, voltage is applied to the plate of V-1409. This tube is employed in a 1020 cps oscillator. Closing the key removes the -47 volt bias from the tube permitting it to oscillate. The 1020 cps tank, Z-1402, is the frequency determining element, and output is taken from the potentiometer, R-1432, in the grid circuit. This output is coupled through R-1470 to the grid of V-1403, from where it is amplified and finally used to modulate the carrier.

3.0 FREQUENCY SELECTOR UNIT

The frequency selector unit in the T-217 transmitter is identical to and interchangeable with the frequency selector unit in the R-278 receiver. The frequency selector unit is explained in detail in CHAPTER FOUR, Section 3.0.

4.0 MECHANICAL DRIVE SYSTEM FOR TRANSMITTER TUNING

The mechanical drive system for transmitter tuning is shown in Figure 5-24. The frequency selector unit mechanically drives the tuning mechanism of the following units: Main Oscillator, Frequency Mulitplier-Amplifier, Exciter, Driver, Servo System and I-F Oscillator.

4.1 Frequency Selector Unit Mechanical Drive

The frequency selector unit mechanical drive system in the T-217 transmitter is identical to the frequency selector unit mechanical drive system in the R-278 receiver since they are a part of the frequency selector unit. For a description of this drive system refer to CHAPTER FOUR, Section 4.1.

4.2 Main Oscillator Unit Tuning

Referring to Figure 5-24, the main oscillator unit crystal-selector switch and coil-selector switch are driven from the 10 mc autopositioner shaft through a 3:1 gear reduction. Since the 10 mc autopositioner shaft makes six revolutions per tuning cycle, these selector switches make two complete revolutions per cycle. The first revolution provides 18 rotor positions for the selection of the proper crystal and coil for the selected frequency. The second revolution occurs at the time the tuners of the frequency mulitplier-amplifier unit are in the unused 180 degrees of their tuning cycle.

4.3 Frequency Multiplier-Amplifier Unit Tuning

The tuning shaft of the frequency multiplier-amplifier is driven by the 10 mc autopositioner shaft through two stages of gear reduction which provide a

speed reduction of 6:1. Thus, the tuners make 1 revolution per tuning cycle. The first 180 degrees of rotation provide the 18 operating positions of the tuners. The second 180 degrees of rotation return the tuners to the beginning point of their cycles. The gears employed in the reduction drive are of the split spring-loaded type to reduce possible inaccuracy due to backlash.

The tuners of the frequency multiplier are driven by the tuning shaft through a system of spur gears which, with the exception of the gears driving the toroidal step tuners, are also of the split spring-loaded type.

4.4 Exciter and Driver Tuning

The r-f tuners used in the exciter and driver units are tuned in 1 mc increments over the frequency range of 220.5 to 399.5 mc. To accomplish this, a mechanical differential is employed. The output from the 10 mc shaft is introduced to a planetary gear system. The output from the 1 mc shaft is also introduced to this gear system through a rocker arm driving a pinion gear. This rocker arm is raised or lowered by a cam on the 1 mc shaft. This cam has its periphery radius-stepped, so that the rocker arm always comes to rest on circle segments with increasing radius as the frequency decreases from the nine position through the zero position. The output from this planetary gear system is then a differential combination of the 1 mc and the 10 mc shafts.

4.5 Servo System Tuning

The three switches employed in the servo system are positioned by the 1 mc and the 10 mc shafts. S-1202A and S-1202B are simultaneously positioned by the output from the 10 mc shaft, and S-1203 is positioned by the 1 mc shaft. In equipments after serial No. 1000, S-1212 was added and it is positioned by the 0.1 mc shaft.

4.6 I-F Oscillator Tuning

The i-f oscillator unit receives two mechanical inputs on two parallel tuning shafts. The input from the 0.1 mc autopositioner is geared 1:1 through an idler gear and the input from the 1 mc autopositioner is geared 2:1 since the 1 mc autopositioner makes two revolutions for one tuning cycle.

The 0.1 mc input is used alone to operate S-401, the crystal selector switch in the low frequency oscillator. The 1 mc input is used alone to operate S-402A and S-402B, the crystal selector switches for the high frequency oscillator, and to operate the tuning core table associated with Z-401. This tuning core table is raised and lowered by a pair of cams which are actuated by the rotation of the 1 mc shaft.

The i-f transformers, T-401, T-402 and T-403, are permeability-tuned by a differential tuning core table which combines the inputs from the 1 mc and the 0.1 mc autopositioners to provide 100 tuning steps. The cams mounted on the floating 1 mc tuning shaft position the tuning core table in ten steps. The cams mounted on the 0.1 mc tuning shaft displace this 1 mc tuning shaft in 10 steps to provide a vernier adjustment of the tuning core table position. The Oldham-type sliding coupler permits the floating 1 mc tuning shaft to be thus displaced.

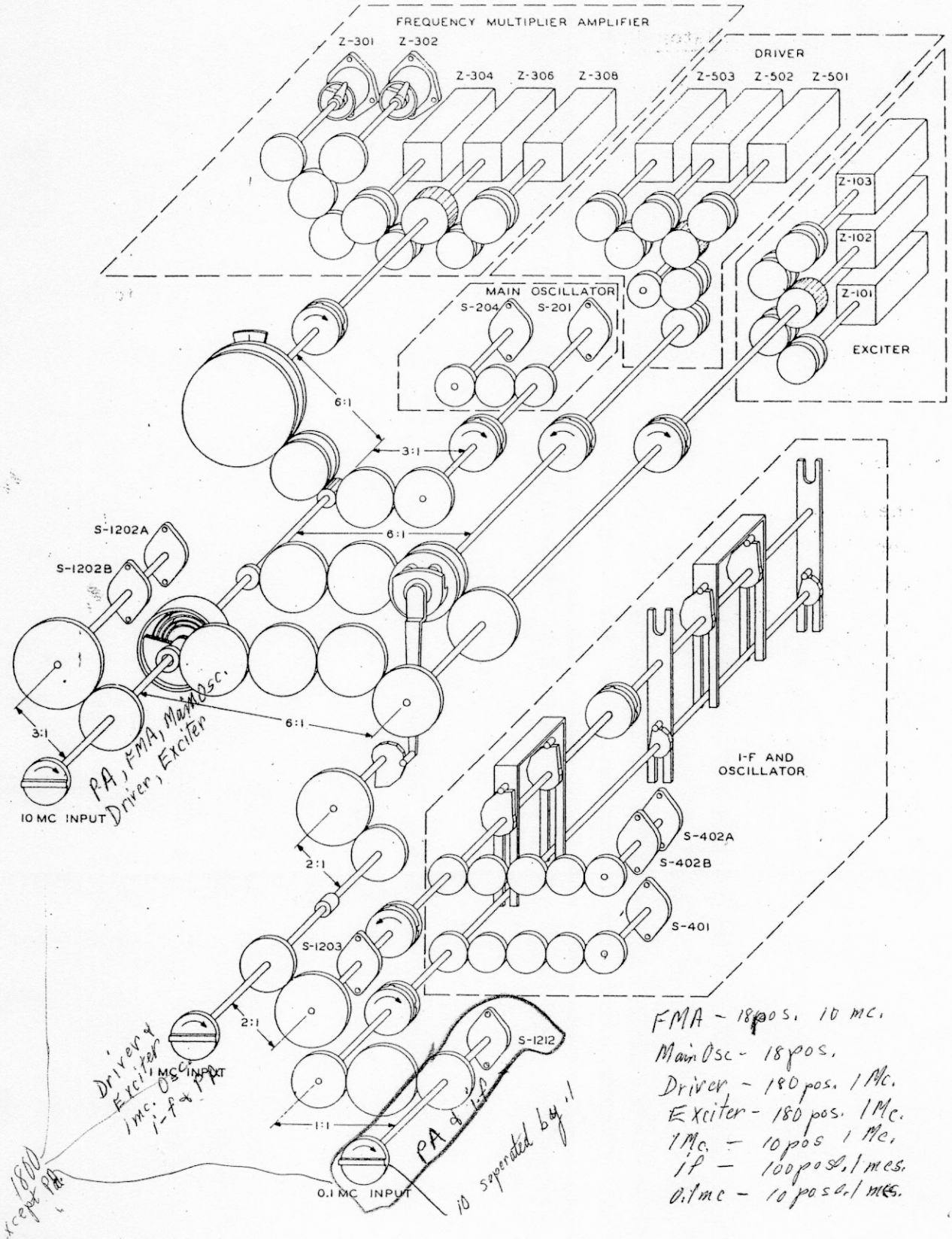

138/5
5/58

Figure 5-24. Tuning System, Mechanical Diagram

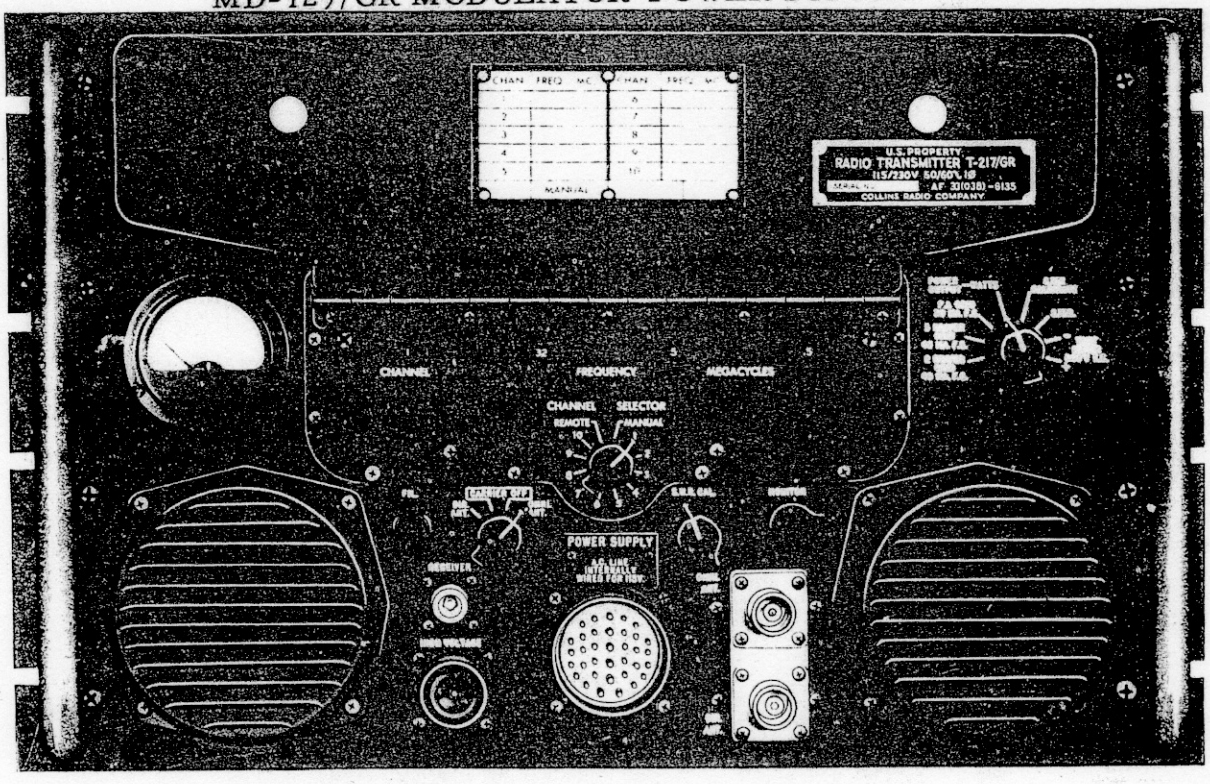

Figure 5-25. Radio Transmitter T-217/GR, Front Panel.

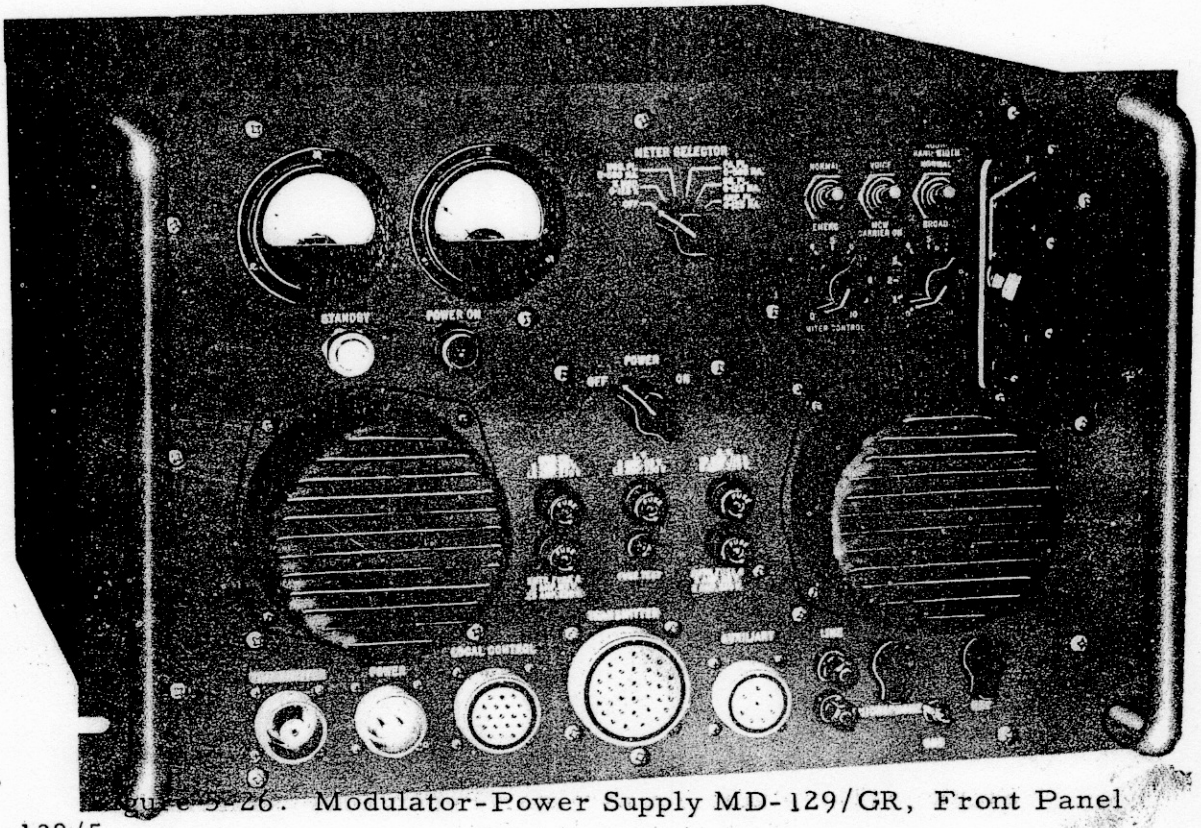

Figure 5-26. Modulator-Power Supply MD-129/GR, Front Panel

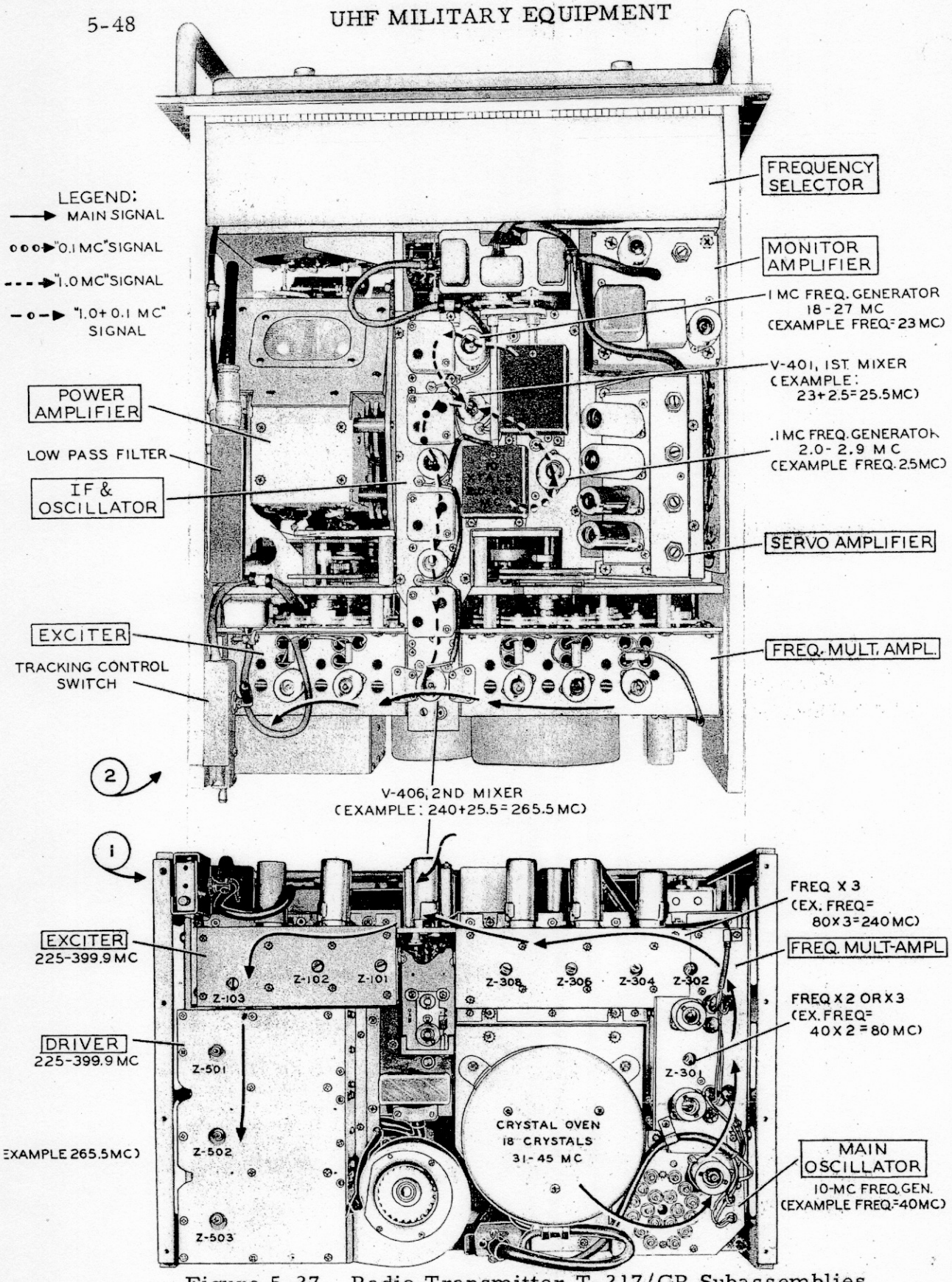

Figure 5-27. Radio Transmitter T-217/GR Subassemblies With Signal Flow Paths.

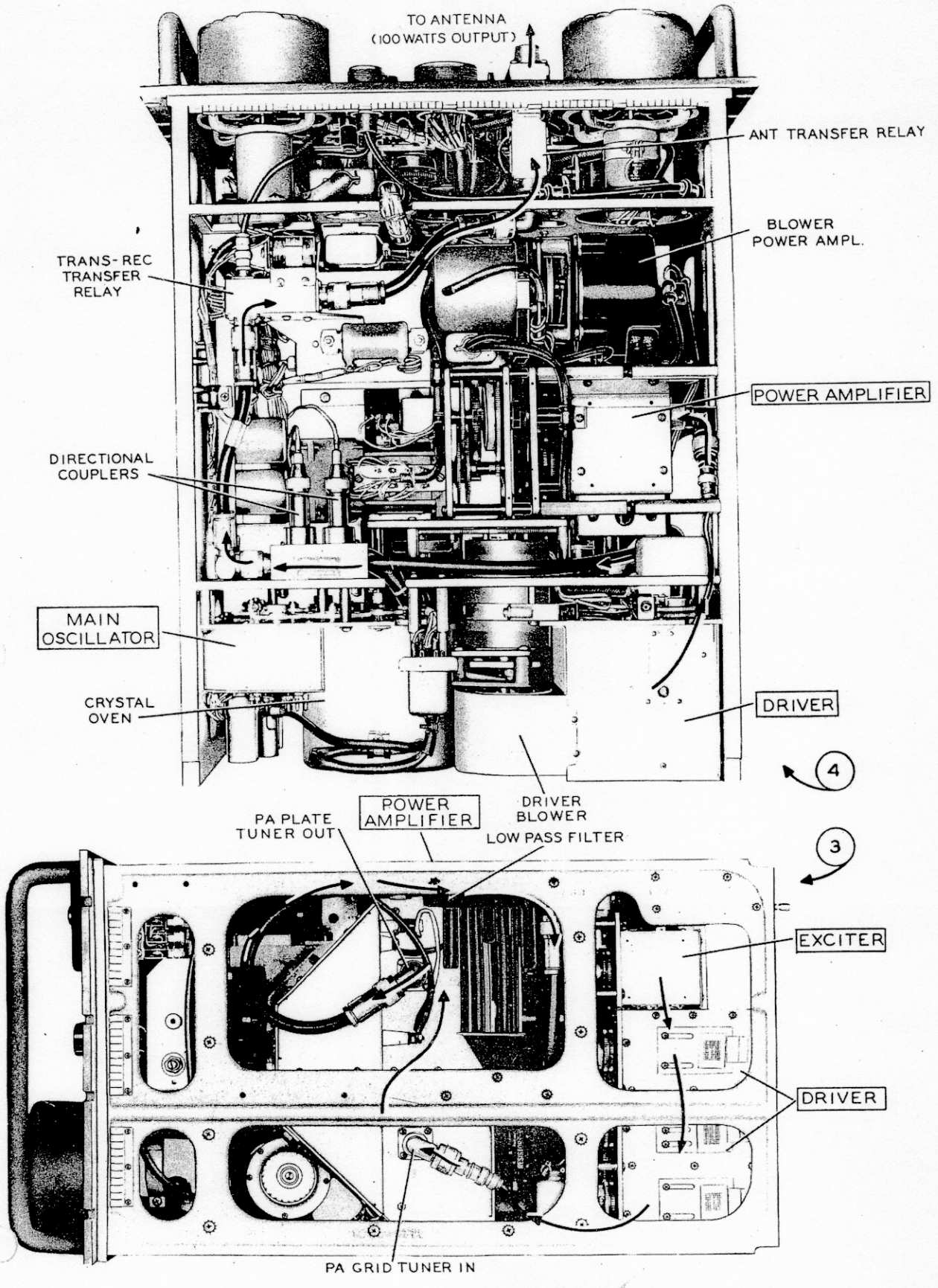

Figure 5-28. Radio Transmitter T-217/GR Subassemblies With Signal Flow Paths.

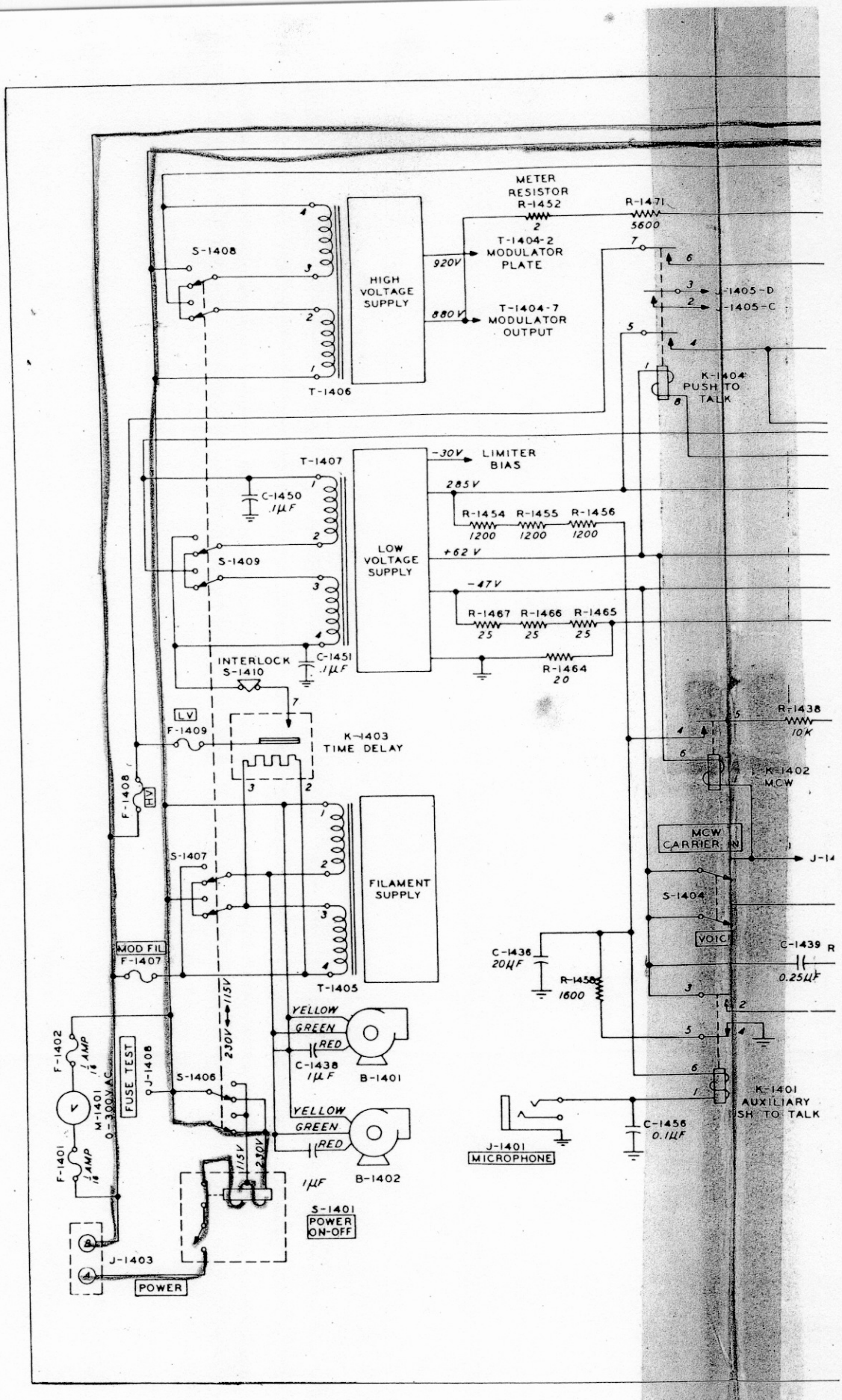
METER RESISTOR R-1452
R-1471 5600
S-1408
T-1406
HIGH VOLTAGE SUPPLY
920V
880V
T-1404-2 MODULATOR PLATE
T-1404-7 MODULATOR OUTPUT
J-1405-D
J-1405-C
K-1404 PUSH TO TALK
T-1407
C-1450 .1μF
S-1409
LOW VOLTAGE SUPPLY
-30V LIMITER BIAS
285V
R-1454 1200
R-1455 1200
R-1456 1200
+62 V
-47V
R-1467 25
R-1466 25
R-1465 25
R-1464 20
INTERLOCK S-1410
C-1451 .1μF
LV
F-1409
K-1403 TIME DELAY
F-1408
HV
S-1407
FILAMENT SUPPLY
MOD FIL F-1407
T-1405
R-1438 10K
K-1402 MCW
MCW CARRIER ON
J-14
S-1404
VOICE
C-1436 20μF
R-1458 1600
C-1439 0.25μF
R
YELLOW
GREEN
RED
C-1438 1μF
B-1401
B-1402
F-1402 1/4 AMP
F-1401 1/4 AMP
M-1401 300V AC
FUSE TEST
J-1408
S-1406
230V
115V
1μF
S-1401 POWER ON-OFF
J-1403
POWER
K-1401 AUXILIARY PUSH TO TALK
C-1456 0.1μF
J-1401 MICROPHONE

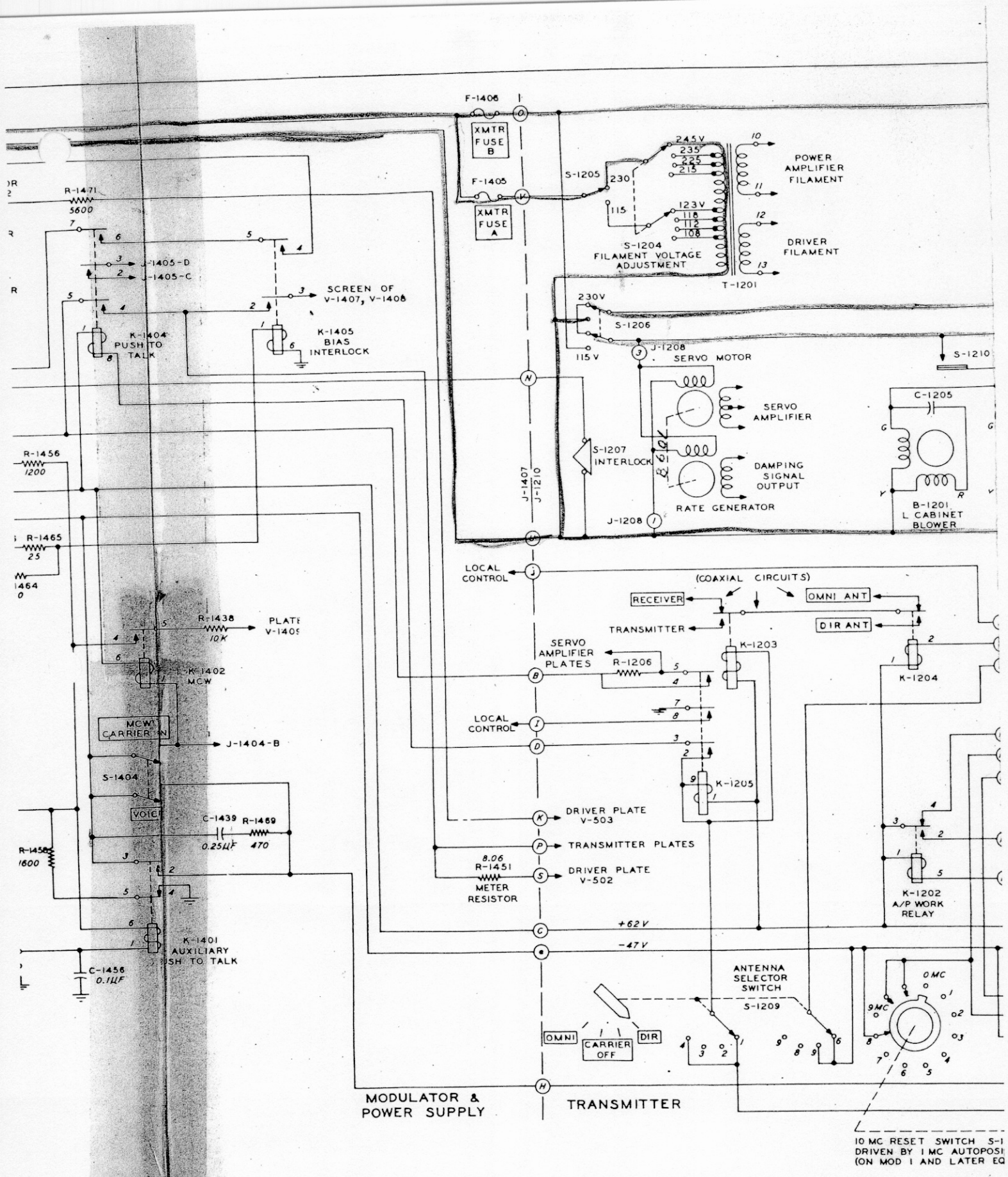
F-1406
XMTR FUSE B
F-1405
XMTR FUSE A
S-1205
245 V
235
225
215
230
115
123 V
118
112
108
S-1204 FILAMENT VOLTAGE ADJUSTMENT
T-1201
POWER AMPLIFIER FILAMENT
DRIVER FILAMENT
230 V
S-1206
115 V
J-1208
SERVO MOTOR
S-1210
SERVO AMPLIFIER
S-1207 INTERLOCK
DAMPING SIGNAL OUTPUT
RATE GENERATOR
J-1208
C-1205
B-1201 L CABINET BLOWER
R-1471 5600
J-1405-D
J-1405-C
SCREEN OF V-1407, V-1408
K-1404 PUSH TO TALK
K-1405 BIAS INTERLOCK
J-1407
J-1210
R-1456 1200
R-1465 25
R-1464 0
LOCAL CONTROL
(COAXIAL CIRCUITS)
RECEIVER
OMNI ANT
TRANSMITTER
DIR ANT
SERVO AMPLIFIER PLATES
R-1206
K-1203
K-1204
R-1438 10K
PLATE V-1405
K-1402 MCW
MCW CARRIER ON
J-1404-B
S-1404
VOICE
C-1439 0.25μF
R-1469 470
R-1458 1600
K-1205
DRIVER PLATE V-503
TRANSMITTER PLATES
8.06 R-1451 METER RESISTOR
DRIVER PLATE V-502
K-1202 A/P WORK RELAY
+62 V
-47 V
K-1401 AUXILIARY PUSH TO TALK
C-1456 0.1μF
ANTENNA SELECTOR SWITCH
S-1209
OMNI
CARRIER OFF
DIR
0 MC
9 MC
MODULATOR & POWER SUPPLY
TRANSMITTER
10 MC RESET SWITCH S-1
DRIVEN BY 1 MC AUTOPOSI
(ON MOD I AND LATER EQ

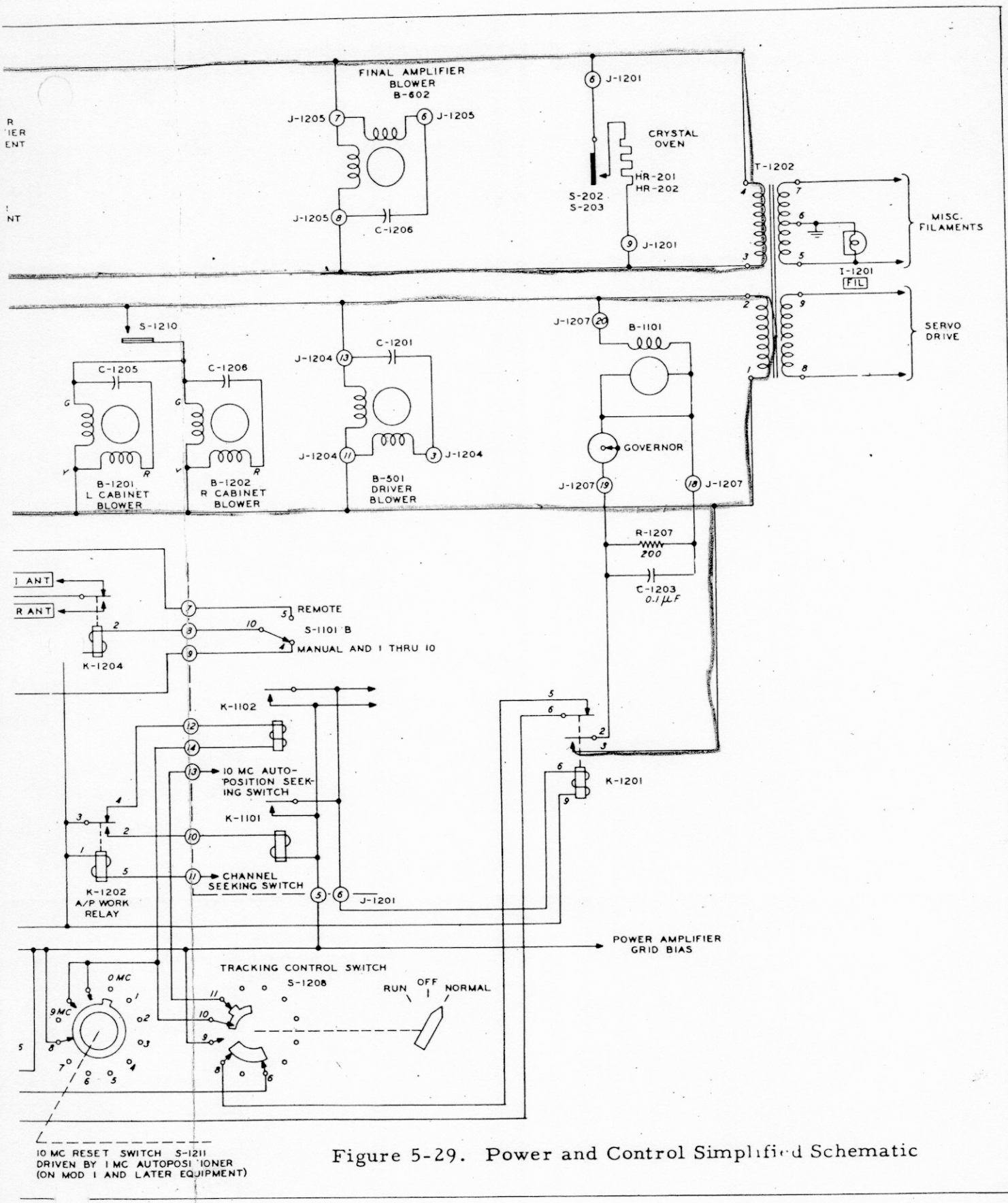

Figure 5-29. Power and Control Simplified Schematic

1mc Osc. 18.006+X

1mc Osc. 1.994+.X

if = 20+X.X

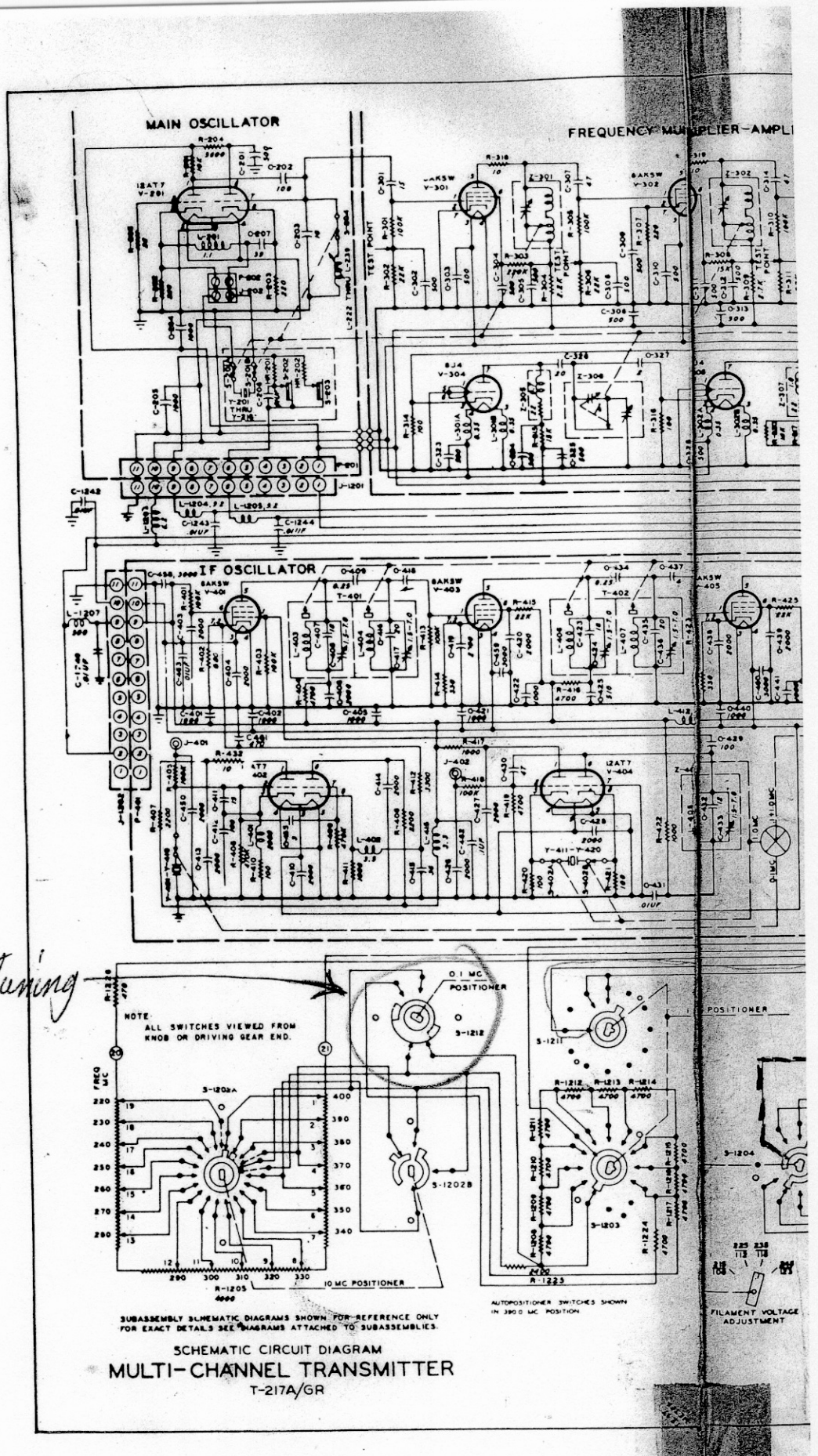

SCHEMATIC CIRCUIT DIAGRAM

MULTI-CHANNEL TRANSMITTER

T-217A/GR

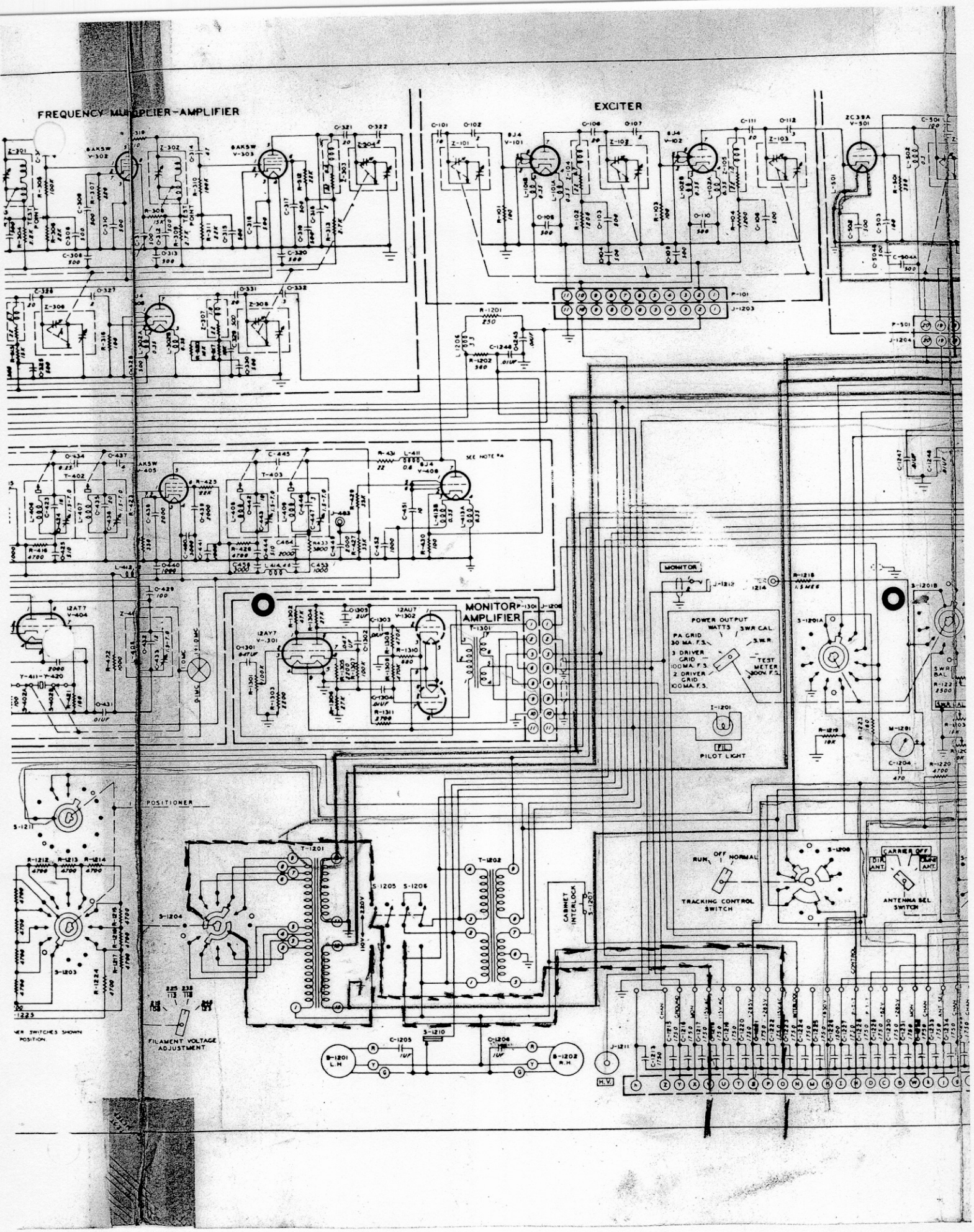
FREQUENCY MULTIPLIER-AMPLIFIER
EXCITER
MONITOR AMPLIFIER
POWER OUTPUT WATTS
SWR CAL.
PA GRID 30 MA. F.S.
3 DRIVER GRID 100 MA. F.S.
2 DRIVER GRID 100 MA. F.S.
TEST METER 300V F.S.
PILOT LIGHT
TRACKING CONTROL SWITCH
ANTENNA SEL SWITCH
CABINET INTERLOCK
FILAMENT VOLTAGE ADJUSTMENT
POSITIONER

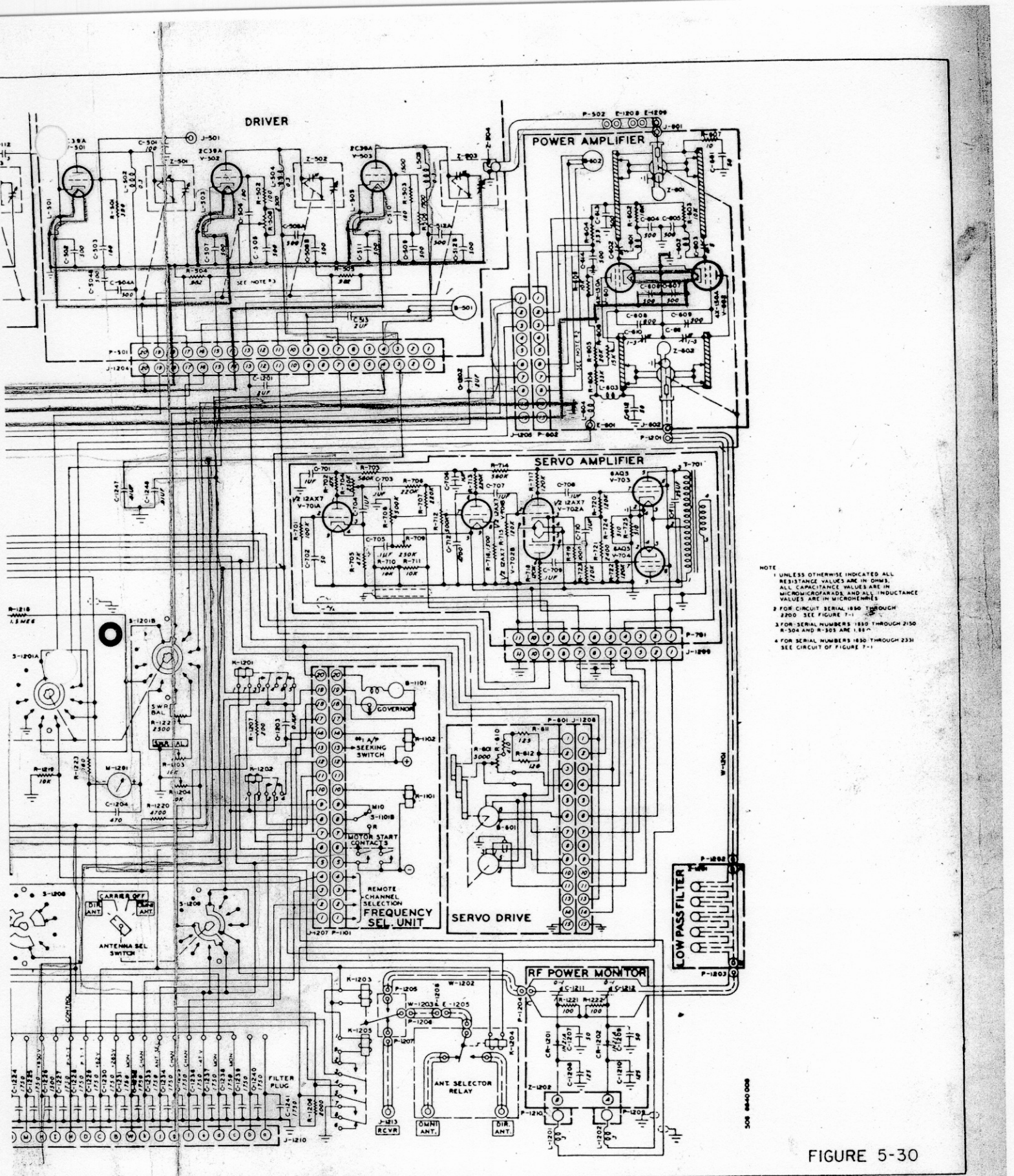
DRIVER
POWER AMPLIFIER
SERVO AMPLIFIER
SERVO DRIVE
FREQUENCY SEL UNIT
REMOTE CHANNEL SELECTION
ANTENNA SEL SWITCH
CARRIER OFF
DIR. ANT.
OWN ANT.
ANT. SELECTOR RELAY
RF POWER MONITOR
LOW PASS FILTER
FILTER PLUG
GOVERNOR
SEEKING SWITCH
MOTOR START CONTACTS
SWR BAL
RCVR
NOTE
1 UNLESS OTHERWISE INDICATED ALL RESISTANCE VALUES ARE IN OHMS, ALL CAPACITANCE VALUES ARE IN MICROMICROFARADS, AND ALL INDUCTANCE VALUES ARE IN MICROHENRIES
2 FOR CIRCUIT SERIAL 1850 THROUGH 2200 SEE FIGURE 7-1
3 FOR SERIAL NUMBERS 1850 THROUGH 2150 R-504 AND R-505 ARE 1.8Ω
4 FOR SERIAL NUMBERS 1630 THROUGH 2331 SEE CIRCUIT OF FIGURE 7-1

FIGURE 5-30

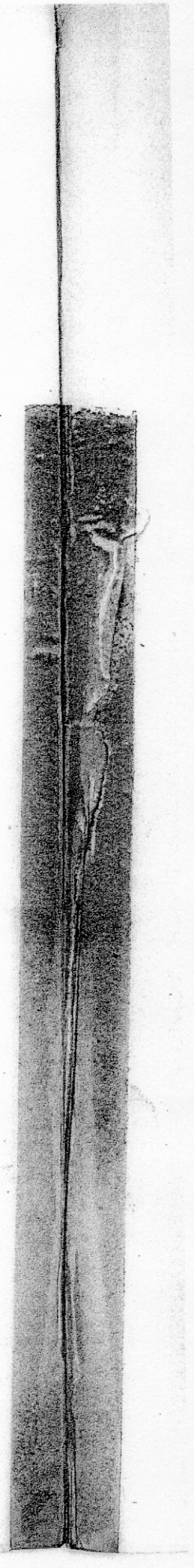

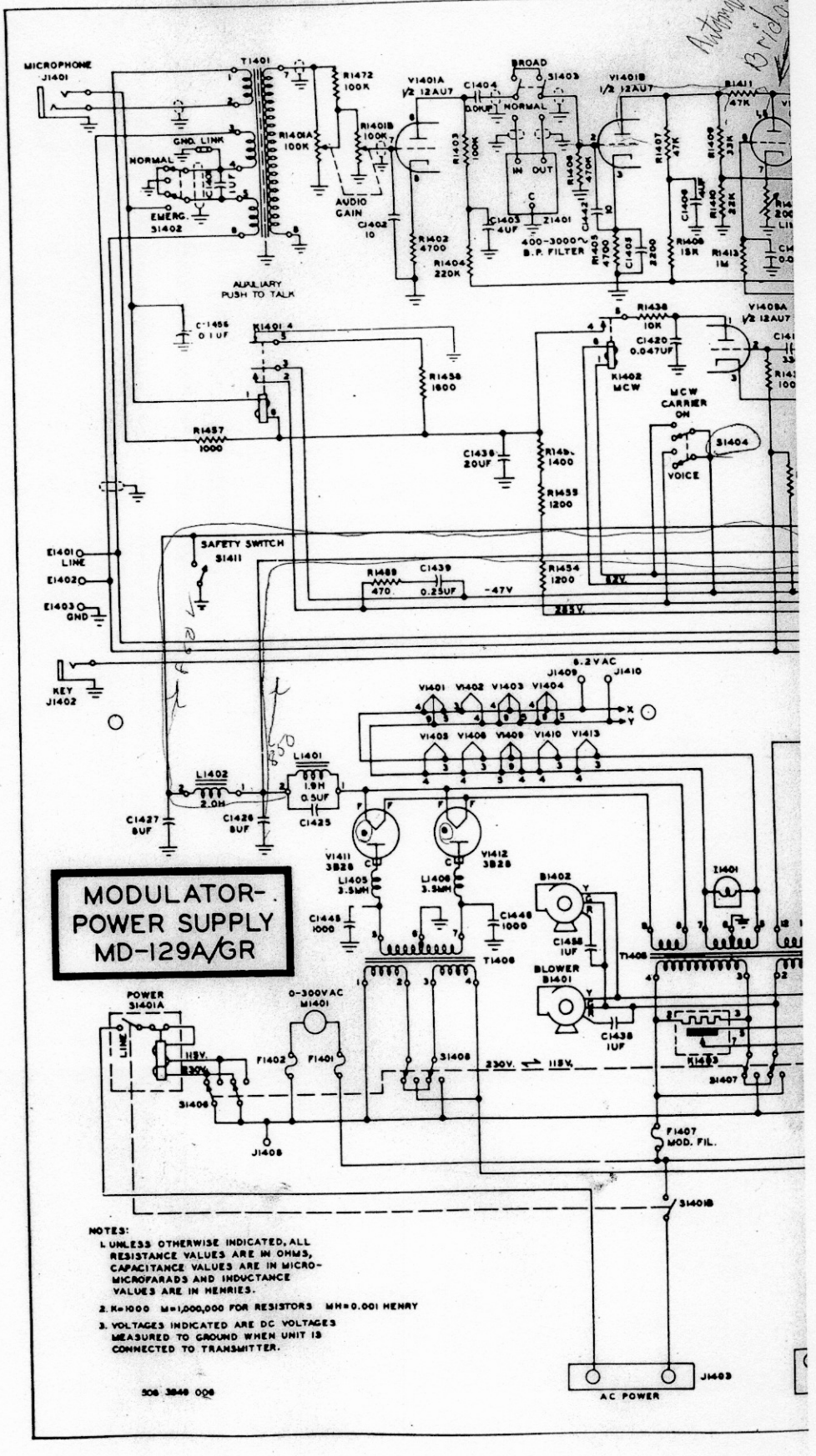

MODULATOR-POWER SUPPLY MD-129A/GR

NOTES:

1. UNLESS OTHERWISE INDICATED, ALL RESISTANCE VALUES ARE IN OHMS, CAPACITANCE VALUES ARE IN MICRO-MICROFARADS AND INDUCTANCE VALUES ARE IN HENRIES.
2. K=1000 M=1,000,000 FOR RESISTORS MH=0.001 HENRY
3. VOLTAGES INDICATED ARE DC VOLTAGES MEASURED TO GROUND WHEN UNIT IS CONNECTED TO TRANSMITTER.

508 3849 008

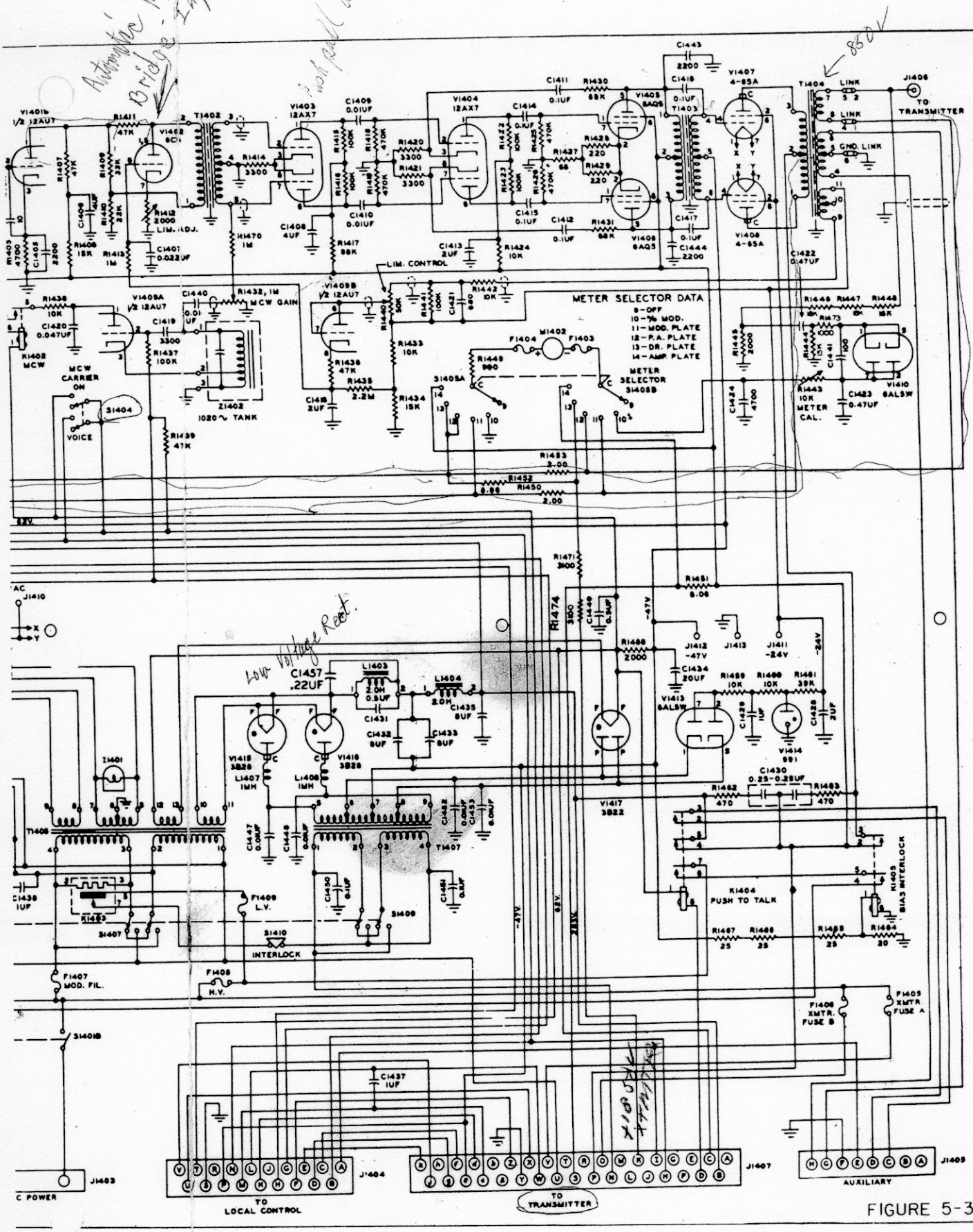
Automatic Mod. Bridge - Input
Push pull audio
850V
Low Voltage Rect.
METER SELECTOR DATA
9-OFF
10-% MOD.
11-MOD. PLATE
12-P.A. PLATE
13-DR. PLATE
14-AMP. PLATE
LIM. CONTROL
MCW GAIN
MCW CARRIER ON
VOICE
1020~ TANK
METER SELECTOR S1405B
METER CAL.
TO TRANSMITTER
LINK
GND. LINK
PUSH TO TALK
BIAS INTERLOCK
INTERLOCK
MOD. FIL.
H.V.
XMTR. FUSE B
XMTR. FUSE A
TO LOCAL CONTROL
TO TRANSMITTER
AUXILIARY
C POWER

FIGURE 5-31

UHF MILITARY EQUIPMENT
CHAPTER SIX
ASSOCIATED EQUIPMENT

1.0 ANTENNAS

All antenna systems of the resonant type capable of operating over a wide frequency range have a diameter or other cross-section that is relatively large. The use of a large diameter does not affect radiation resistance appreciably, but it reduces the inductance and increases the capacity of the antenna elements (smaller L/C ratio), thereby lowering the "Q" of the antenna and permitting it to resonate over a broader frequency range. Antennas used with the military UHF equipment have these characteristics.

The discone antenna is composed of a metallic cone mounted so that the apex of the cone is uppermost and a metallic disc mounted with the flat sides in the horizontal plane directly above, but insulated from, the apex of the cone. Usually the lengths of the antenna elements for half wave resonance are considerably less for the discone than those for a dipole, and at each side of resonance the reactive component of the antenna impedance is less. The discone antenna will retain the low reactance characteristic over a wide range of frequencies and can be fed directly with a 52 ohm transmission line; it is therefore broadband and has the gain of a half wave dipole over a considerable range of frequencies. Also,the high angle radiation is much greater than that from a vertical dipole.

1.1 AT-197/GR Antenna

Referring to Figure 6-1, the AT-197/GR antenna is a discone type antenna consisting of 12 rods forming a simulated disc and 12 rods forming a simulated cone. The disc and cone are separated by a glass insulator. Radiation from the AT-197 is vertically polarized and is non-directional in the horizontal plane, with the signal strength

not varying more than 1/2 db about the azimuth. The vertical angle of maximum signal strength is at the horizon for lower frequencies and increases considerably above the horizon as the frequencies are increased from 225 to 400 megacycles. This antenna is the one primarily used for CAA installations. The radiation pattern of the AT-197/GR antenna at 300 mc is shown in Figure 6-3.

1.2 AS-505/GR Antenna

The AS-505/GR antenna is not used in CAA installations. However, since it was designed for use with UHF Military Equipment it will be described.

Referring to Figure 6-2, the AS-505/GR antenna is a stacked 4 bay antenna, the bays being mounted upon a vertical mast by metallic supports. These supports also serve as insulators due to the configuration of the antennas and the electrical lengths of the elements. Each bay is in effect a vertically polarized wide-band dipole, folded and fed so as to obtain non-directional radiation in the horizontal plane. The physical spacing between the bays of the antenna and the electrical lengths of their connecting cables are such that the vertical angle of the main lobe is 5 degrees. Smaller low power lobes are present in the pattern at higher vertical angles but these are of very low power when compared to the lower angle intensity. The gain of the antenna at the main lobe is 4 to 5.5 db over the range of 225 to 400 megacycles.

The design of the AS-505 is such then, that it is very efficient for broadband use where maximum distance coverage is desired and the sacrifice of good reliable overhead communications is not detrimental. The radiation pattern of the AS-505/GR antenna at 285 mc is shown in Figure 6-4.

2.0 REMOTE CONTROL UNIT, C-806/GR

Referring to Figures 6-5 and 6-6, the C-806/GR control unit is used in conjunction with the T-217 and R-278 equipment to provide a means of

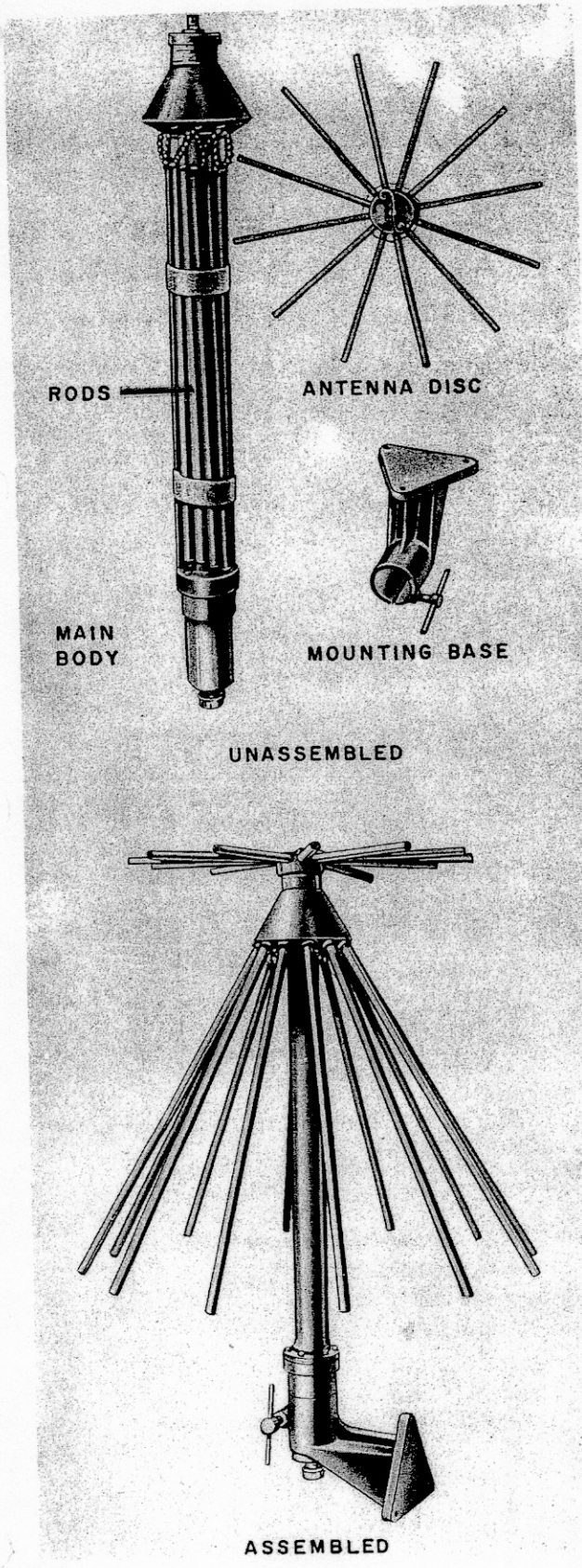

Figure 6-1. Antenna AT-197/GR

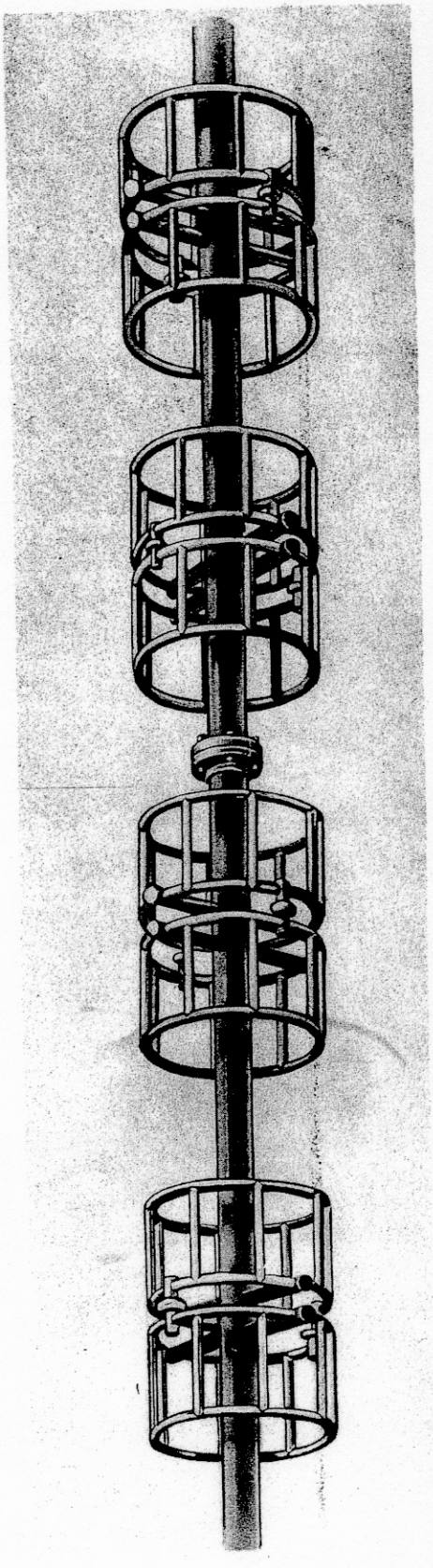

Figure 6-2. Antenna AS-505/GR

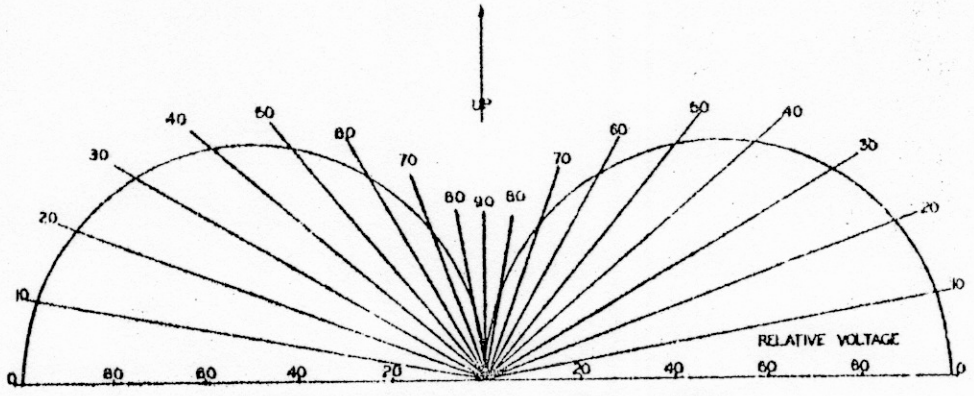

Figure 6-3.

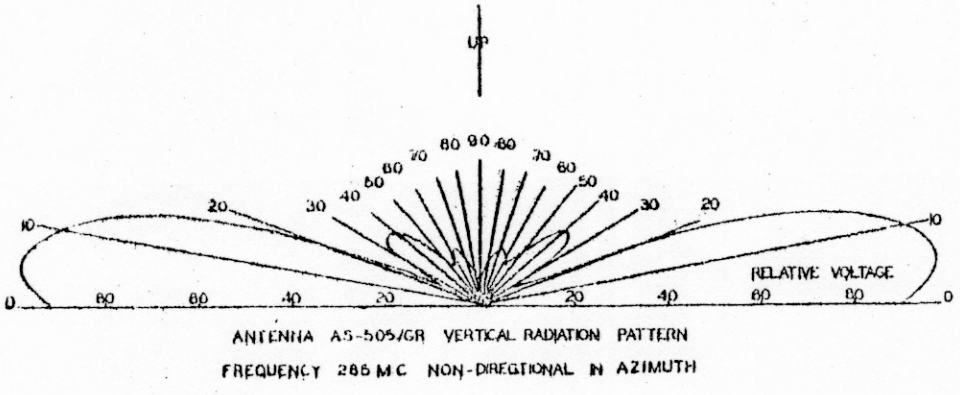

Figure 6-4.

selecting the desired pre-set channels on the transmitter and receiver. The control indicator, which uses a type 991 neon lamp, is used as a visual monitor for the transmitter. The headset jack is used for monitoring the receiver output and the monitor jack is used for aural monitoring of the transmitter.

The control unit is mounted in the air-ground console at the communications stations and at the operating positions in towers. The C-806 control unit has a self contained power supply using a 6X4 type tube and RC filtering for its B+ supply. The control indicator, the microphone jack and the headphone jacks are in the center of the front panel with the receiver channel selection switch to the left of these and the transmitter channel selection switch to the right.



Figure 6-5. Control-Indicator C-806/GR Panel Controls

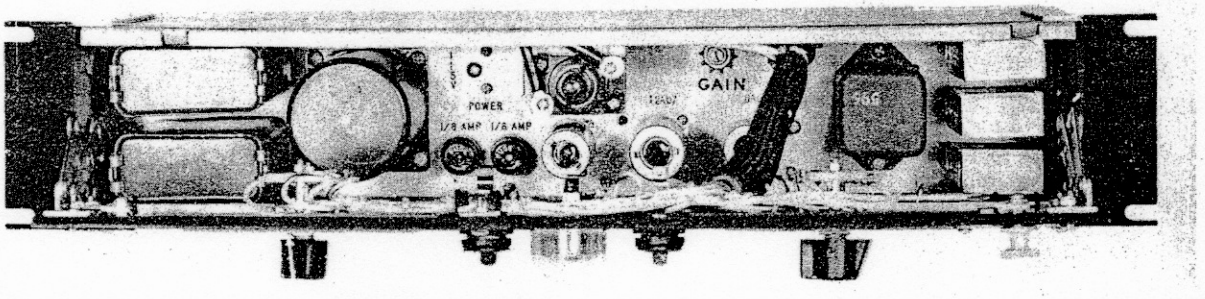

Figure 6-6. Control-Indicator C-806/GR Front Panel Open

Remote channel selection has been covered thoroughly in section 3.8 of Chapter 4, (R-278 Receiver), and will not be repeated here. The microphone and headset connections are brought out to the terminal strip, thence to the equipment and needs no further discussion. The monitoring circuits however, contain some unusual applications of some basic circuits.

Referring to Figure 6-7, the transmitter monitoring and control indicating circuitry consists of 2 tubes, a 12AU7 and a 6AL5. The "A" section of the 12AU7 acts either as an amplifier supplying output at the plate, or as an amplifier with output taken from both the plate and the cathode. This may be verified by obsering that when headphones are not plugged into the monitoring jack the closed-circuit type jack connects the lower end of capacitor C-503 to ground, causing it to serve as a bypass for R-502 in the cathode circuit. With these connections, the output will be developed across the plate load resistor and fed to the 6AL5 for rectification. When headphones are plugged into the monitor jack the lower end of the capacitor is removed from ground and the capacitor is then used to couple the audio developed across R-502 to the headphones for aural monitoring of the transmitter output.

The operation of the visual indicating circuitry can best be analyzed by first considering no signal across the primary of T-501. With this condition no signal is present at the grid of the DC amplifier V-501B. With the grid of V-501B at groung potential the current through the tube will be relatively high causing a substantial voltage drop across R-508 and R-509 in parallel. The neon lamp, V-504, is connected in series with a current limiting resistor between the plate of the tube and ground. The plate voltage, under these conditions, is too low to cause ionization of the gas in the lamp and it will not light.

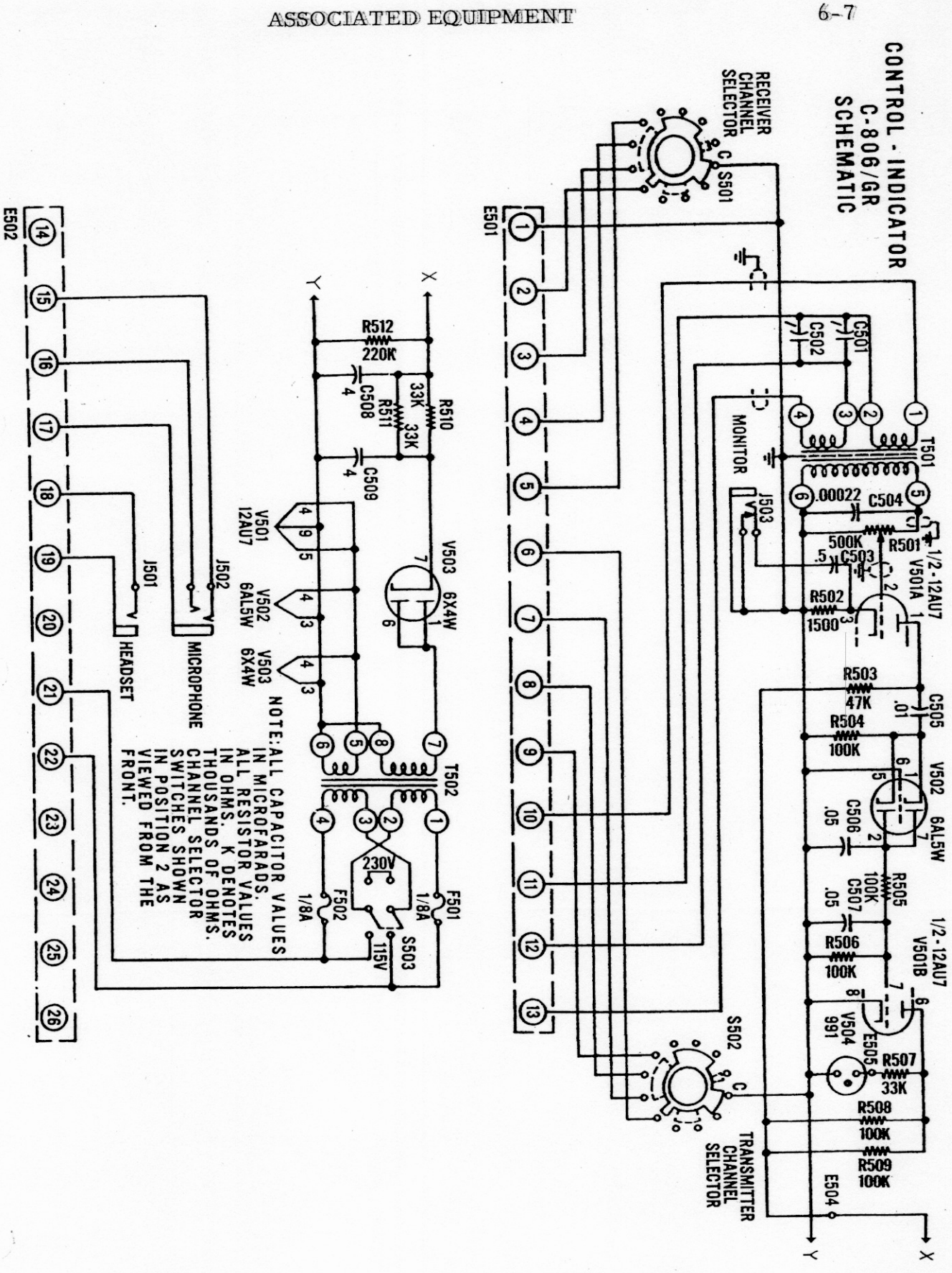

Figure 6-7. Control-Indicator C-806/GR

When the transmitter is modulated an audio signal is supplied from a winding on the modulation transformer to the primary of T-501. The secondary winding of T-501 is terminated into a variable resistor with the variable contact supplying input to the grid of V-501A, which amplifies the signal and feeds it to the rectifier circuit of V-502. The negative output from the rectifier, applied to the grid of V-501B, will cause a decrease in the plate current of this tube and the plate voltage will rise. The increase in plate voltage is sufficient to cause ionization in V-504, therefore a visual indication is obtained as the transmitter is modulated. The variable resistor, R-501, is adjusted so the audio level applied to the rectifier circuit is high enough to cause proper operation of the lamp. With correct adjustment of resistor R-501 the addition of the headphones for aural monitoring should not affect the visual functions of the unit.

3.0 DISTRIBUTION PANEL, J-390/GR

A distribution panel, J-390/GR, is mounted in each rack used for UHF military equipment. The purpose of the panel is to furnish a junction from which primary power can be distributed and from which audio and control connections between the rack equipment and external units can be made. Referring to Figure 6-8, three horizontal metallic bars are mounted in the left end of the distribution panel and are used for primary power and distribution. The center and bottom bars are used for 115 volt operation; the top and bottom bars for 230 volt operation, with the center bar used as neutral. The center bar may be grounded by a slotted link provided for this purpose when using 230 volt primary power. Two 115 volt convenience outlets are mounted on the back of the unit. Forty terminals occupy the remainder of the space in the distribution panel and are used for control and audio connections to the rack equipment. An external earth ground should be connected to the stud located between the convenience outlets on the rear of the unit.

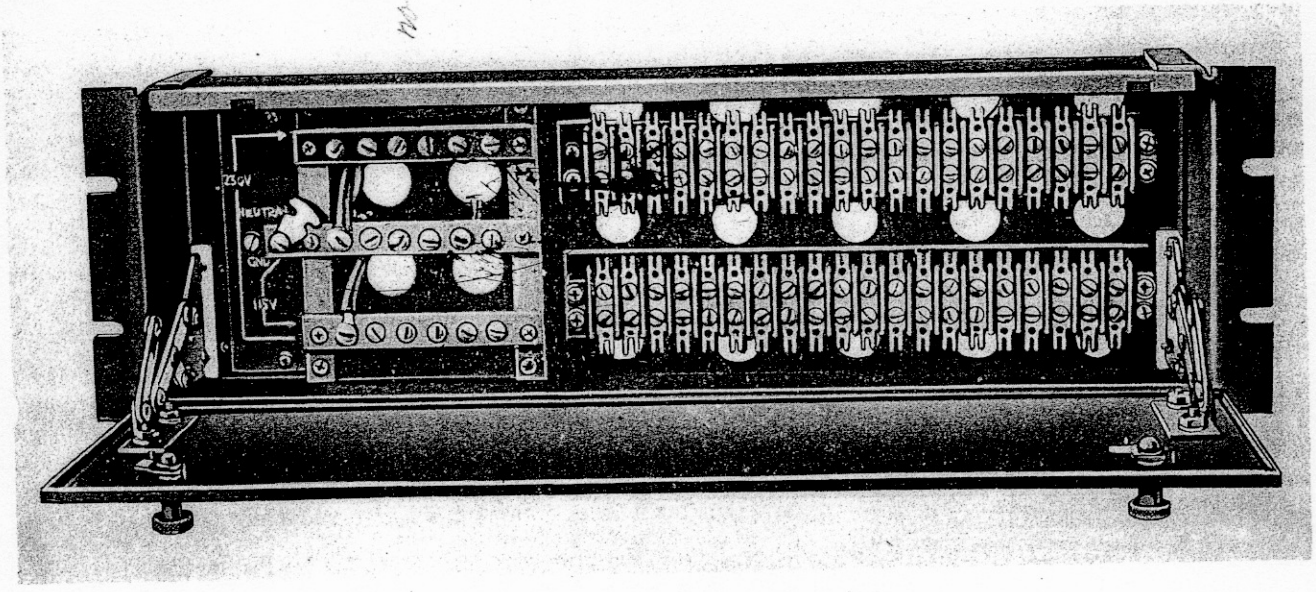

Figure 6-8. Distribution Panel J-390/GR

4.0 AF AMPLIFIER, AM-447/GR

The AF amplifier AM-447/GR is a complete unit with a self-contained power supply. Operating controls are accessible from the front panel. Connections to the unit are made through a connector plug on the rear of the chassis that mates with a connector jack on the mounting panel, MX-1125/G, when the amplifier is in the mounting panel.

The Amplifier requires an AC power source of 107 to 120 volts, 50 to 60 cycles, single phase. The input level may be either -10 dbm to +10 dbm or -20 dbm to 0 dbm with no more than 5 miles of cable between the equipment supplying the signal and the Amplifier. The output level may be adjusted for any level up to 3 watts (+34 dbm) and will hold the level constant within 2 db for all levels of input signals within the limits previously stated. Some distortion may be expected in the output, however, if the Amplifier is adjusted for extremely low output levels.

4.1 Theory of Operation and Circuit Analysis

Referring to Figure 6-9, the output from the first audio stage is dependent upon two variables, the amount of signal applied to the grid from the input circuit and the bias supplied from the limiter, and will be held constant by adjustments of these variables. The constant level audio is then further amplified by the second amplifier and output stages to produce an audio output of a predetermined level up to 3 watts.

Taps on the input transformer, T-102, provide for connection of the Amplifier input to either a 300 or 600 ohm line. A phone jack, J-102, connected across the 600 ohm tap of T-102 provides a convenient connection for monitoring or measuring the level of the input signal. The secondary of T-102 is terminated into a series-parallel resistance using a variable resistor, R-103, to adjust the signal level applied to the grid of V-102, first amplifier stage.

The first audio amplifier stage is the variable-gain stage of the unit. The tube is self-biased by R-106 in the cathode circuit and in addition a negative voltage from the limiter is applied to the grid. This limiter voltage varies with signal level and is adjustable to obtain the desired output from the AM-447/G. The limiter circuit will be discussed later in this chapter. The audio output from the first stage is developed across resistor, R-110 and coupled to the grid of the second stage by capacitor C-107.

The second audio amplifier stage and the audio output stage are normal audio amplifiers and no unusual circuitry is used in their application in this unit. The output of V-104 is developed across a parallel circuit composed of the primary of the output transformer, T-103, and resistors R-121 and R-122. These resistors are connected in series. One secondary winding of T-103 provides taps for a balanced output of either 200 or 600 ohms impedance. The other secondary winding has 5000 ohms impedance and is terminated into a resistive load consisting

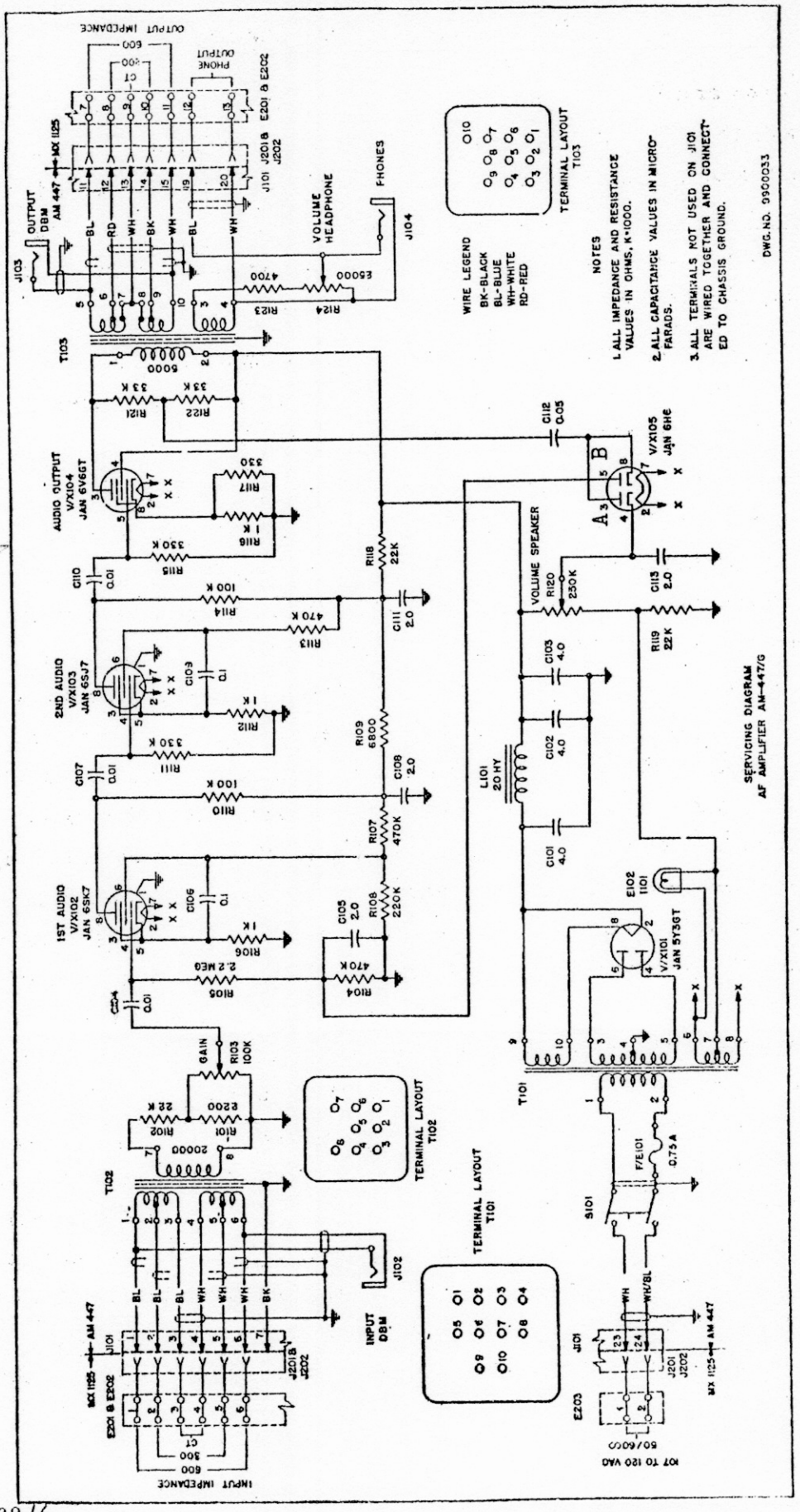
OUTPUT IMPEDANCE
PHONE OUTPUT
OUTPUT DBM
VOLUME HEADPHONE
PHONES
AUDIO OUTPUT V/X104 JAN 6V6GT
2ND AUDIO V/X103 JAN 6SJ7
1ST AUDIO V/X102 JAN 6SK7
V/X105 JAN 6H6
VOLUME SPEAKER
V/X101 JAN 5Y3GT
GAIN
INPUT DBM
INPUT IMPEDANCE
TERMINAL LAYOUT T101
TERMINAL LAYOUT T102
TERMINAL LAYOUT T103
WIRE LEGEND
BK-BLACK
BL-BLUE
WH-WHITE
RD-RED
NOTES
1. ALL IMPEDANCE AND RESISTANCE VALUES IN OHMS, K=1000.
2. ALL CAPACITANCE VALUES IN MICROFARADS.
3. ALL TERMINALS NOT USED ON J101 ARE WIRED TOGETHER AND CONNECTED TO CHASSIS GROUND.
DWG. NO. 9900033
SERVICING DIAGRAM AF AMPLIFIER AM-447/G
107 TO 120 VAC

Figure 6-9

of R-123 and R-124 in series. R-124, a variable resistor, is used to vary the level of the audio supplied to the headphone jack, J-104, mounted on the front panel. Another jack, J-103, is mounted on the front panel also, and is connected across the 600 ohm winding to provide a convenient method of measuring the audio output while making the gain and limiter adjustments of the unit.

The volume limiting circuits maintain the output of the Amplifier at a preset level by varying the gain of the first audio amplifier stage. V-105 in the limiter circuit is a 6H6 (duo-diode).

The plate of diode "A" is connected to the cathode of diode "B" and to one side of the coupling capacitor C-112. Potentiometer R-120, which is in the bleeder circuit of the power supply, applies a positive bias to the cathode of diode "A". When the audio voltage developed across resistor R-122 is negative, diode "B" will conduct and a negative voltage will be developed across resistor R-104. This negative voltage is filtered by C-105 and is applied to the grid of the 1st audio stage, which will provide a certain amount of automatic gain control. When the audio voltage developed across resistor R-122 is positive and when this voltage is greater than the positive bias on the cathode of diode "A", this diode will conduct. When diode "A" conducts, capacitor C-112 will charge to a voltage that is equal to the difference between the positive bias on the cathode of diode "A" and the positive voltage across R-122. The voltage developed across C-112 is of a polarity that will add to the negative voltage that is developed across R-122 during the negative half cycle of the audio signal. This will cause diode "B" to conduct heavier and will produce a higher negative voltage across R-104. Therefore, a greater gain reduction is provided for the higher level audio signals and will limit the level of the audio output of the amplifier. The amount of limited output level is adjusted by potentiometer R-120. R-120 varies the positive bias on the cathode of diode "A", which in turn varies the voltage to which C-112 will be charged during the positive half cycle of the audio signal.

4.2 Adjustment of AM-447/G

For normal operation the limiter bias control, R-120, (This control is labeled "VOLUME SPEAKER" on the front of the amplifier), is adjusted full clockwise to provide maximum bias voltage to the "A" section of V-105 thus disabling its limiter action. An audio signal of normal level (mid-point of the input limits) is applied to the input of the Amplifier and the gain control, R-103, adjusted for an output level 2 db greater than the desired output. The "VOLUME SPEAKER" control is then adjusted counter-clockwise until limiter action reduces the Amplifier output to the desired level. These adjustments sets the limiter action so that input signals may vary $\pm$ 10 db without a change of more than 2 db in the Amplifier output level. To change the level of the audio supplied by the AM-447 to the line, or other terminating equipment, both the gain control and the limiter action must be readjusted as above, otherwise severe distortion in the output may result.

Several views of the AM-447/G amplifier is shown in Figures 6-10 through 6-13.

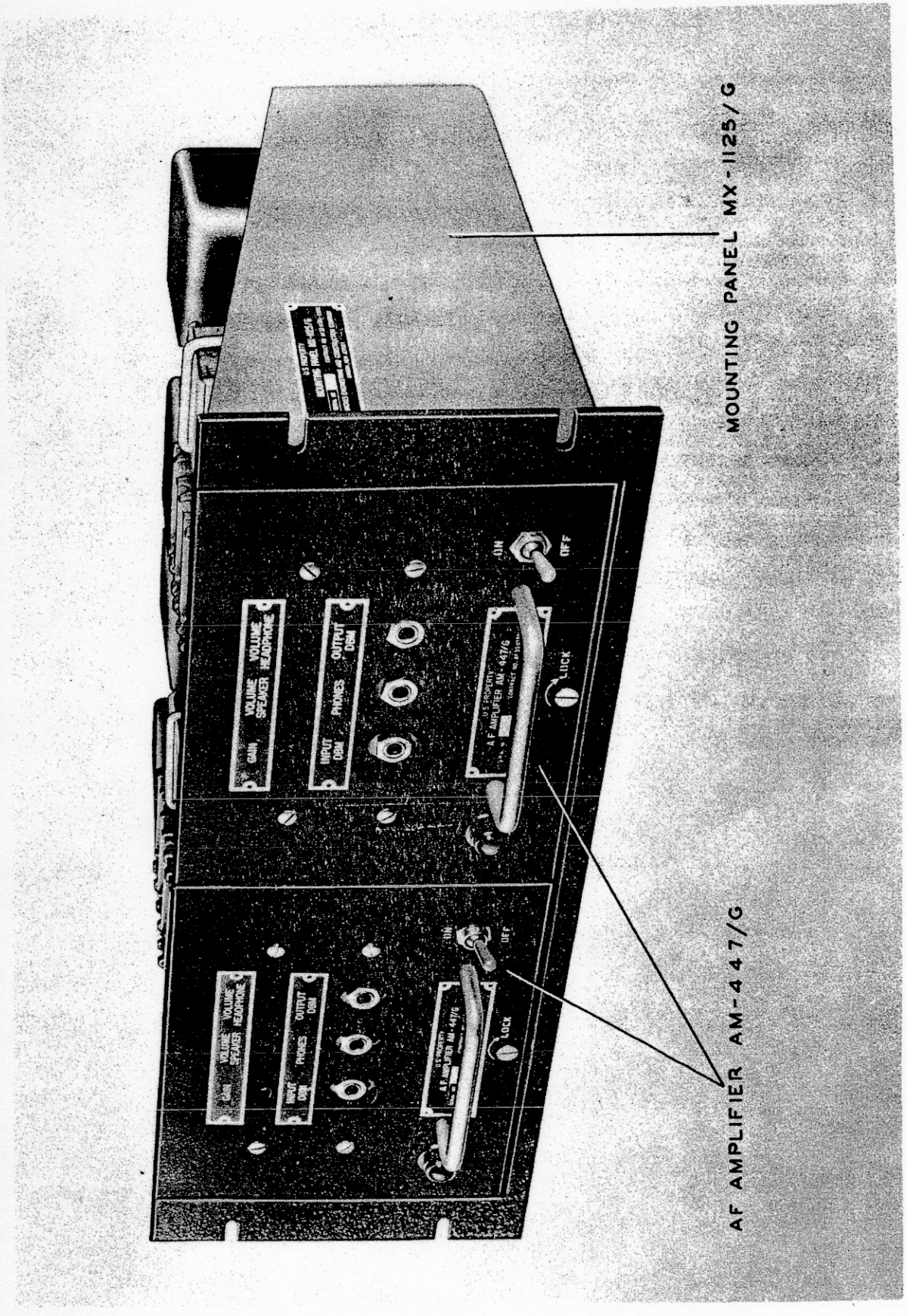

Figure 6-10. AF Amplifier AM-447/G and Mounting Panel MX-1125/G

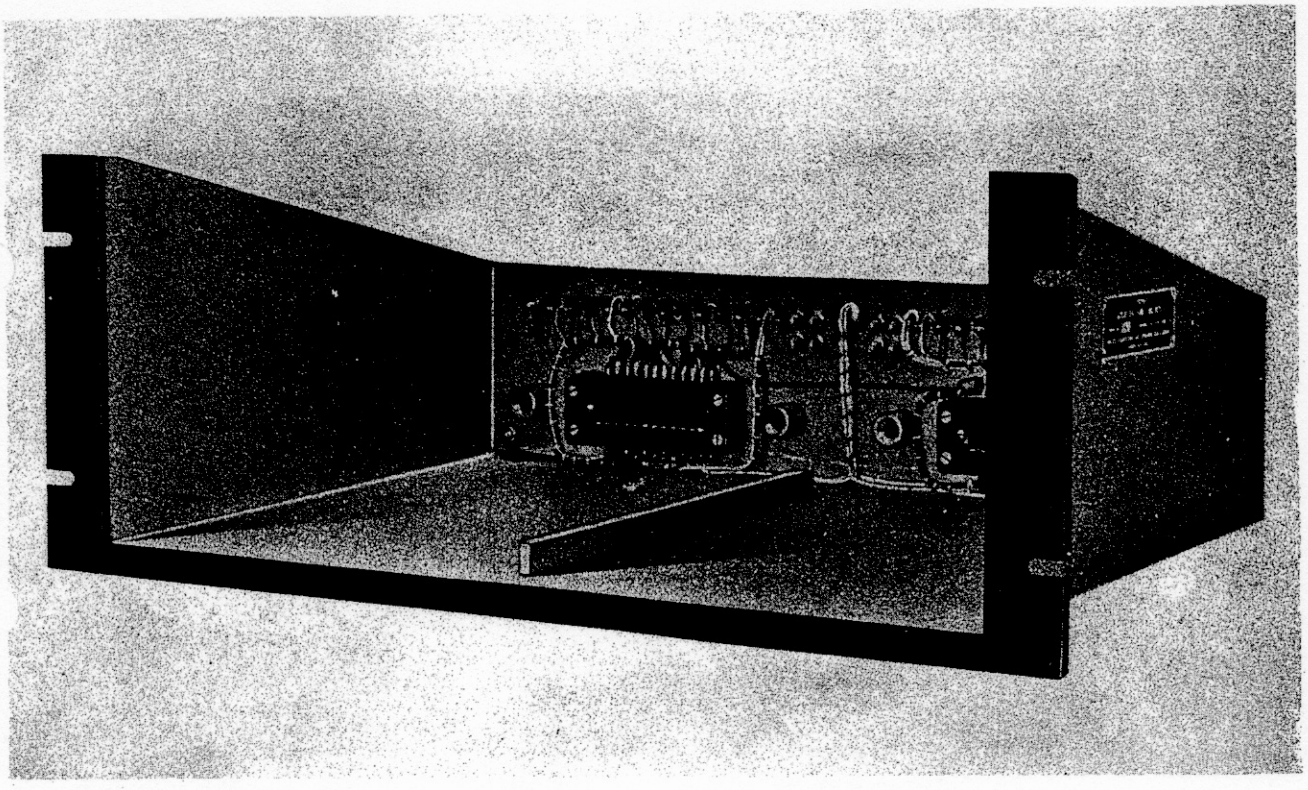

Figure 6-11. Mounting Panel MX-1125/G



Figure 6-12. AF Amplifier AM-447/G, Panel View

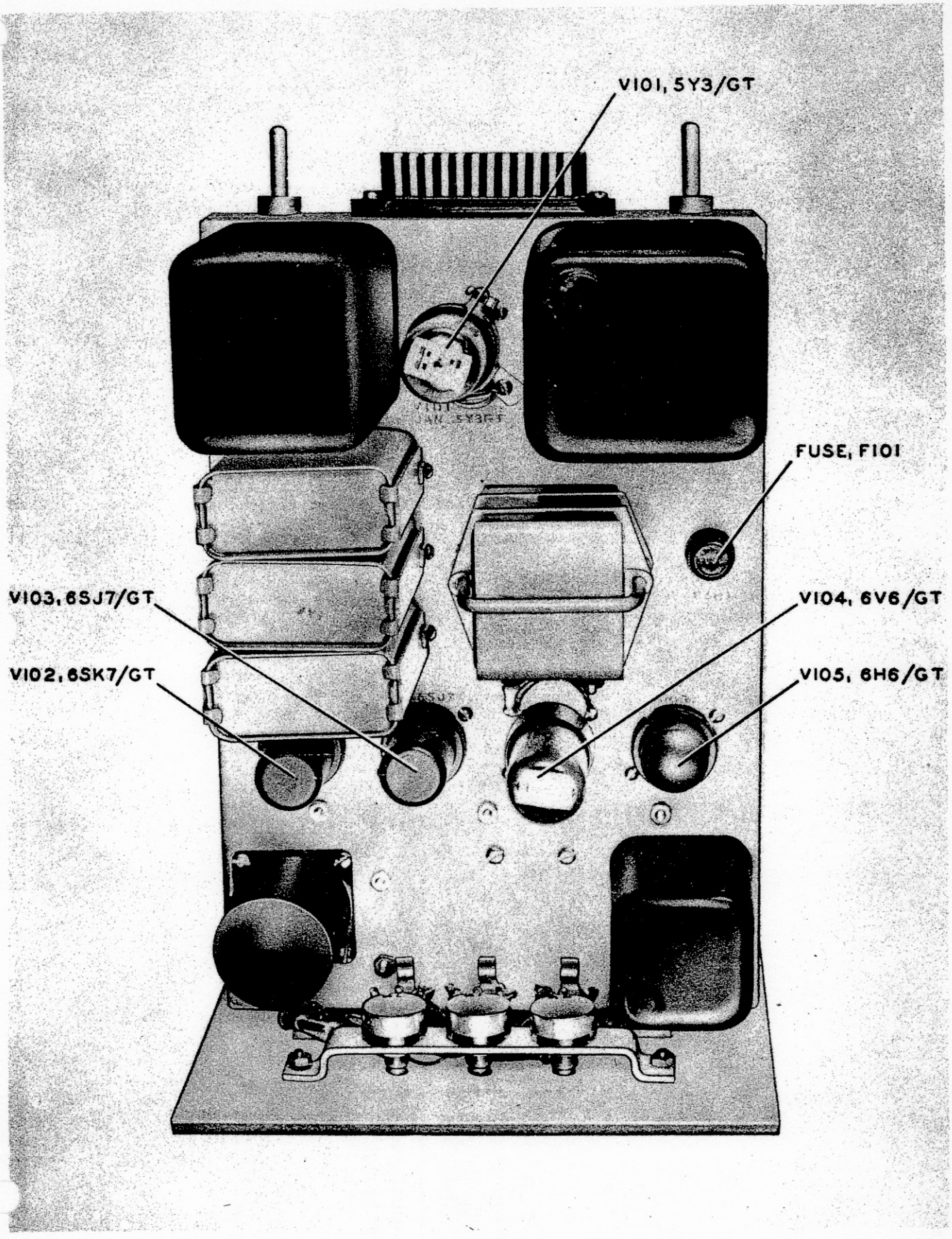

138/6
11/58 Figure 6-13. AF Amplifier AM-447/G, Top View

CAA AERONAUTICAL CENTER
AIR NAVIGATION FACILITIES BRANCH
COMMUNICATIONS EQUIPMENT UNIT

UHF MILITARY EQUIPMENT LABORATORY EXPERIMENT

Name Charles G. Turner

Date March

R-361 RECEIVER

PURPOSE OF EXPERIMENT

The purpose of this experiment is to familiarize the student with the physical and electrical characteristics of the R-361 receiver. Approved methods of alignment and making performance measurements are used herein and the use of specialized test equipment and tools is required.

REFERENCES

Handbooks, Operating Instructions (TO #AN-16-30GRR7-1), Service Instructions (TO #AN-16-30GRR7-2), Overhaul Instructions (TO #AN-16-35R361-3), for Radio Set AN/GRR-7 (R-361/GR Receiver).

UHF Military Equipment Course Material.

Lecture Notes.

EQUIPMENT REQUIRED

Radio Receiver, Type R-361/GR.

HF Signal Generator, Measurements Corporation Model 65B.

UHF Signal Generator, Hewlett-Packard Model 608D.

Output Meter, General Radio Type 583A.

Vacuum Tube Voltmeter.

Frequency Meter, Model BC-221.

Miscellaneous Hand Tools, in Tool Box.

Assorted Cables and Test Leads.

Special Tools for R-361 Receiver.

PROCEDURE I (Familiarization)

A. Remove the receiver from the rack, taking out the bottom screws last, and place on its handles, face down, on the work table. Remove cover by loosening the four fasteners at rear and sliding up.

B. Locate R-F Subassembly and observe design and construction thereof.

1. Remove bottom cover of R-F subassembly at rear of chassis. Using the schematic drawing (use the blue Ozalid copy in back of binder instead of those in the books), look over the construction of the unit. Locate the following on both the schematic and the receiver:

a. J-401
b. C-432
c. U-401
d. C-402, R-401
e. V-401, Type? 6J4WA
f. L-404, C-404
g. C-403, R-403
h. C-401
i. L-401, C-407
j. C-406, R-404
k. V-404, Type? 6AK5W
l. C-425 and connection to T-301.
m. Observe compartmentation and shielding between input and output circuits of each tube.

C. Locate Oscillator Subassembly and observe design and construction thereof.

1. Remove bottom of oscillator subassembly next to R-F unit. Locate, both on the schematic, and on the receiver:

   a. A-501 (on top)
   b. L-505
   c. V-501, Type? 12AT7WA
   d. C-501, L-501
   e. C-502, L-502
   f. J-501, Name? 1st tripler Meter
   g. J-502, Name? 1st ampl. Meter
   h. J-503, Name? 2nd tripler
   i. J-504, Name? 2nd ampl. Meter
   j. U-501
   k. U-502 and the strap over to C-427 in the R-F subassembly.
   l. Y-502 (on top), Freq? 34.4 mc.
   m. V-505, Type? 12AT7
   n. E-501, Combination of coil and resistor
   o. C-528, C-534, L-504
   p. L-507 and wire to Second Mixer, V-301.

2. Replace the covers of both subassemblies, noting:

   a. Orientation of covers so that grounding strips align with compartmentation.

   b. Strap between covers.

D. Locate I-F strip and observe design and construction thereof.

1. Look over the general construction of the first and second I-F sections.

2. Read note on schematic above T-304.

3. Record the serial number of this receiver.

   Serial No. 3746

4. Locate the following test points:

   a. Center tab of C-351.

   b. Pins No. 1 of V-301, V-302, V-303 and V-304.

   c. Junction of R-325 and S-303, Noise Limiter Switch. (Important test point)

5. Locate the R-F GAIN control R-309. What tubes does it control? Gain of 1st + 2nd i-f.

E. Locate Audio, AVC and Power Sections, and observe design and construction thereof.

1. Locate, on the schematic, and on the receiver:

a. Tubes V-305 through V-312.

b. A-F GAIN control R-327.

c. AUDIO QUIETING DB control, R-333.

d. SQUELCH switch S-302.

e. Audio output transformer T-308 (not identified in Fig. 7-16, but is transformer immediately to the right of V-309).

f. AUDIO OUTPUT jack J-301. Output should be at least 1 watts into 600 ohms.

g. MUTING terminals. NOTE: The full output power (see above) is available at these terminals for a 600 ohm load.

h. MONITOR terminals. NOTE: Correct Service Instructions Handbook, Page 45, Paragraph 4-52, in part, to read . . . . . R-348 supplies + 15 dbm (15 db above one milliwatt) . . . . . Correction is underlined.

i. J-303 AVC METER jack.

j. Junction of R-342, R-343, C-331 (important test point - shorts out AVC when grounded).

k. POWER switch S-301 and r-f filters for the AC line L-313, C-345, etc.

PROCEDURE II (Alignment)

A. Connect A-C power to receiver, VTVM, BC-221 Frequency Meter, and HF Signal Generator.

B. Adjust Output Meter for 600 ohm load, with meter switch on highest output level setting. Connect AUDIO OUTPUT (phones) jack of receiver to Output Meter.

C. Set receiver R-F and A-F GAIN controls to extreme counter-clockwise position (minimum).

D. Turn receiver POWER switch to ON.

E. Allow equipment to warm up 10 minutes before attempting to align.

F. Align the 6 mc I-F Section.

1. Set receiver controls as follows:

   a. Turn the POWER switch to OFF.

   b. Turn the R-F GAIN control to extreme clockwise position. (Pointer should indicate "10")

   c. Turn the AUDIO QUIETING DB control to extreme counterclockwise position.

   d. A-F GAIN control is in extreme counterclockwise position.

   e. Turn the SQUELCH switch to OFF position.

   f. Turn the NOISE LIMITER SWITCH, located on the main chassis, to the OFF position.

2. Short the AVC bus to ground, by means of a jumper from the junction of R-342 and R-343 to the chassis.

3. Set the vacuum tube voltmeter to "-3V D-C" scale, and connect connect D-C lead to the junction of R-325 and S-303. Connect common lead to receiver chassis.

4. Connect one side of a .05 mfd paper capacitor in series with the center conductor lead from the signal generator. Connect the other side of the capacitor to the center tab of C-351, by means of a clip lead.

5. Connect the ground lead from the signal generator to the receiver chassis, by means of a short length of bus wire (three inches or less).

NOTE: When connecting the signal generator to the receiver, the length of the connecting leads must be kept to a minimum.

6. Make certain the MODULATION control on the signal generator is set to OFF.

7. Set the frequency meter to 6 mc, and connect it to the center conductor lead from the signal generator.

8. Set the output of the signal generator to 500,000 uv, and carefully turn frequency dial of the signal generator until zero beat is heard in the earphones, plugged into the frequency meter.

9. Disconnect the frequency meter from the circuit. The signal generator is now set to 6 mc.

NOTE: Do not turn the frequency control knob on the signal generator once the alignment has been started.

10. Turn the POWER switch on the receiver to ON.

11. Adjust the output of the signal generator until the vacuum tube voltmeter swings to a level of about -1.0 volt.

12. Refer to Figure 1-4, R-361 Service Instructions Handbook for location of primary and secondary connections.

13. Carefully clip a 680 ohm aligning resistor across the primary of I-F transformer T-303.

14. Increase the output of the signal generator until the VTVM again reads approximately -1.0 volt.

15. Slowly tune the secondary (top slug) of T-303, until a maximum reading is obtained on the VTVM.

NOTE: Reduce signal generator output as required to prevent pinning VTVM meter needle and to maintain approximately a -1.0 volt output indication.

16. Remove the 680 ohm resistor from the primary of T-303, and apply it to the secondary.

17. Slowly tune the primary (bottom slug) of T-303, until the VTVM indicates maximum.

18. Repeat steps 13 through 17 on I-F transformers T-304, T-305 and T-306.

19. Remove the 680 ohm aligning resistor.

20. Remove the AVC grounding connection from the junction of resistors R-342 and R-343 to ground.

21. Transfer the D-C lead of the VTVM from the junction of R-325 and S-303, to AVC METER jack J-303.

22. Increase the output of the signal generator until the VTVM reads approximately -1.0 volt.

23. Tune the bottom slug of T-302 until a maximum output is obtained.

G. Determine gain of 6 mc I-F Section as follows:

1. Short AVC to ground with a jumper from the junction of R-342, R-343 and C-331.

2. Measure gain of third 6 mc I-F stage.

a. Adjust receiver controls as follows:

(1) POWER switch to ON.

(2) SQUELCH switch to OFF.

(3) NOISE LIMITER switch to OFF.

(4) R-F GAIN full counterclockwise.

(5) A-F GAIN full counterclockwise.

(6) AUDIO QUIETING DB full counterclockwise.

b. Connect VTVM between test point H and ground.

NOTE: See receiver schematic for location of test points.

c. Connect HF Signal Generator between test point I and ground using a .05 mfd capacitor in series with the "hot" lead of the generator.

10,000

d. Set output frequency of signal generator to 6 mc (as determined by BC-221 previously), with MODULATION to OFF.

e. Adjust output level of signal generator to produce exactly -1.0 volt D-C on the VTVM. Record this value on the attached performance data sheet. Value should be less than 150,000 uv. 10,000

3. Measure gain of second 6 mc I-F stage.

a. Adjust receiver controls same as in step 2-a except:

(1) R-F GAIN control full clockwise.

b. Connect HF Signal Generator to test point J.

c. Adjust output level of signal generator to produce exactly -1.0 volt D-C on VTVM. Record this value on the attached performance data sheet. Value should be less than 15,000 uv. 2, K

4. Measure gain of first 6 mc I-F stage.

a. Adjust receiver controls same as in step 3, a.

b. Connect HF Signal Generator to test point K.

c. Adjust output level of signal generator to produce exactly -1.0 volt D-C on VTVM. Record this value on the attached performance data sheet. Value should be less than 500 uv. 15-0 uv

5. Measure overall gain of 6 mc I-F Section.

a. Adjust receiver controls same as in step 3, a.

b. Connect HF Signal Generator to test point L.

c. Adjust output level of signal generator to produce exactly -1.0 volt D-C on VTVM. Record this value on the attached performance data sheet. Signal generator output level required should be between 390 and 810 uv. 320 280 uv

H. Determine the center frequency of the 6 mc I-F section as follows:

1. Set receiver controls and special conditions as indicated in Steps G-1 and G-5 above.

2. Connect test equipment to receiver as indicated in Step G-5 above. (VTVM connected between Test Point H and ground).

3. Adjust output frequency of HF Signal Generator to approximately 6 mc and then refine frequency adjustment to give a maximum reading on VTVM. Adjust output level of signal generator to approximately -1.0 volt on VTVM.

4. Vary frequency of signal generator above and below 6 mc and notice that a peak is obtained in both instances. Now vary the frequency from one peak to the other, and note the frequency between the two peaks, at which minimum output from the i-f strip is obtained.

5. Connect the frequency meter to the output of the signal generator. Increase the output of the signal generator until sufficient signal is available, at the frequency meter, to detect a beat-note. The frequency meter dial setting corresponds to the center frequency of the I-F Amplifier and should be 6 mc $\pm$ 1 kc.

NOTE: The specification "6 mc + 1 kc" is given for the condition where the 680 ohm aligning resistor is a 1/4 watt unit and is soldered into the circuit as required during the 6 mc I-F section alignment. As 1/2 watt, 680 ohm resistors (larger size-greater capacity to ground) are connected into the circuits by alligator clips (more capacity) in the foregoing experiment, it is to be expected that the center frequency of the I-F section will be out of the tolerances specified. However, record the actual measured frequency on the attached performance data sheet.

I. Measure the 6 mc I-F bandwidth as follows:

1. Set receiver controls and special conditions as indicated in Step G-1 and G-5 above.

2. Connect test equipment to the receiver as indicated in Step G-5 above. (VTVM connected to Test Point H and ground).

3. Set signal generator to same frequency as determined in Step H above.

4. Set output level of signal generator to 500 uv.

5. MODULATION control on generator should be OFF.

6. Read and record VTVM indication.

7. Increase output of signal generator to 1000 uv.

8. Detune the signal generator above and below center frequency until VTVM reading is same as in Step 6. Note and record these two frequencies. (Use "Dial" scale of 65B Signal Generator to improve accuracy of these readings).

9. The difference between the two readings in Step 8 is the 6 db bandwidth of the receiver. It should be more than 60 kc for the receivers used in this laboratory.

10. Increase output of signal generator to 500,000 uv.

11. Detune signal generator above and below center frequency until VTVM reading is same as in Step 6. Note and record these two frequencies. (Use "Dial" scale of 65B Signal Generator to improve accuracy of these readings).

12. The difference between the two readings obtained in Step 11 is the 60 db bandwidth. It should be less than 175 kc for the receivers used in this laboratory.

13. Record the 6 db and 60 db bandwidths on the attached performance data sheet.

14. Remove jumper shorting AVC to ground.

J. Align the Second Oscillator.

1. Connect the D-C probe of the VTVM (with built-in 1-megohm isolating resistor) to Pin 1 of V-301.

2. Tune the 2ND OSC TUNING control for maximum indication on the VTVM.

3. Detune 2ND OSC TUNING slightly on the stable side of resonance. (On the unstable side of resonance, the oscillator will drop sharply out of oscillation). Check with the instructor in case of difficulty.

K. Align the First Oscillator.

1. Determine receiver channel frequency as follows:

a. Note frequency of crystal Y-501 in first oscillator.

b. Multiply crystal frequency by nine (9) and add 40.4 mcs to the product. The result will be the receiver channel frequency. 379.40003

2. Set all the tuning dials to approximately the correct frequency as determined in Step K-1 above. See Figure 1-3 of Service Instructions #AN16-30GRR7-2 for location of dials if necessary.

3. Connect VTVM to the 1st TRIPLE METER jack J-501 and tune the 1st OSC adjustment for a peak on the VTVM.

4. Connect VTVM to the 1st AMPL METER jack J-502 tune the 1st TRIPLE PLATE adjustment for a peak on the VTVM.

5. Connect VTVM to the 2nd TRIPLE METER jack J-503 and tune the 1st AMPL plate adjustment for a peak on the VTVM.

6. Connect VTVM to the 2nd AMPL METER jack J-504 and tune the 2nd TRIPLE PLATE adjustment for a peak on the VTVM.

7. Set the 2nd AMPL PLATE adjustment to the desired frequency on the scale.

L. Align the R-F Section.

1. Connect a VTVM to the junction of R-325 and S-303.

2. Connect the UHF Signal Generator to the ANT INPUT jack.

3. Adjust output level of the signal generator to get a nominal output on the VTVM. MODULATION control on signal generator should be on EXT MOD.

4. "Rock" the signal generator frequency dial for a maximum indication on the VTVM. (About half-scale on "3" V. D-C range)

5. Adjust the ANT, 1st R-F PALTE, 2nd R-F Plate, and 3rd R-F PLATE tuning adjustments to the approximate desired frequency. See Step K-2 above.

6. Make a final adjustment on the above four controls as well as the others indicated, by noting a peak on the VTVM, in the order given below: (Not more than half-scale on "3" V. D-C range)

   a. 2nd AMPL PLATE
   b. ANT
   c. 1st R-F PLATE
   d. 2nd R-F PLATE
   e. 3rd R-F PLATE
   f. T-301 (top slug)
   g. T-301 (bottom slug)
   h. L-307 (bottom slug)
   i. Repeat steps 6-a through 6-h.

PROCEDURE III (Performance Measurements)

A. R-F Sensitivity.

1. Set receiver controls as follows:

   a. POWER switch to ON.
   b. R-F GAIN full clockwise.
   c. A-F GAIN full clockwise.
   d. SQUELCH switch ON.
   e. NOISE LIMITER switch ON.
   f. AUDIO QUIETING DB control full counterclockwise.

2. Connect output meter to receiver AUDIO OUTPUT (phones) jack. Set output meter impedance to 600 ohms and level multiplier to 100.

3. Connect UHF Signal Generator to antenna input of receiver.

4. Turn signal generator POWER to OFF.

5. Note whether or not an output level (noise) is indicated on the output meter. (Decrease level multiplier if necessary) 30 m watt

   a. If an output is indicated (noise), reduce the R-F GAIN control until this noise is squelched.

   b. If no output is indicated (noise), proceed with the next step, leaving the R-F GAIN control full clockwise. Record setting of R-F GAIN control. 9.5 dd

6. Turn signal generator POWER to ON.

7. Turn SQUELCH to OFF.

8. Set output level of signal generator to 3.0 uv, modulated 30% with 1000 cps, on channel frequency.

9. Set A-F GAIN of receiver so that output level is 10 mw.

10. Turn MODULATION control on signal generator to EXT MOD.

11. The output level as noted on the output meter should drop at least 10 db.

    a. If it drops more than 10 db, repeat 8, 9, and 10, using a smaller signal input until a signal to noise ratio of 10 db is obtained.

    b. If it fails to drop 10 db, sensitivity is below normal. Check equipment and test equipment settings and connections, and if trouble cannot be remedied, contact an Instructor.

12. Record R-F sensitivity on the attached performance data sheet.

NOTE: This receiver is designed to provide 10 mw of audio power across a 600 ohm balanced load, with an input signal not greater than 3 uv, modulated 30% at a frequency of 1,000 cps. These conditions must be met when maintaining a minimum signal plus noise, to noise ratio of ten to one.

B. Measure voltage levels in First and Second Oscillator sub-assemblies as follows:

1. First Oscillator, V-501.

   a. Connect D-C probe of VTVM between 1st TRIPL METER jack J-501 and ground.

   b. Measure output of first oscillator V-501. Level indicated on VTVM should be approximately -1.0 volt.

2. First tripler V-501.

   a. Connect VTVM between 1st AMPL METER jack J-502 and ground, using D-C probe of VTVM.

   b. Measure first tripler output. Level indicated on VTVM should be approximately -1.5 v.

3. First Amplifier, V-502.

   a. Connect VTVM between 2nd TRIPL METER jack J-503 and ground, using D-C probe of VTVM.

   b. Measure 1st amplifier output. Level indicated on VTVM should be approximately -3 volts.

4. Second Tripler, V-503.

   a. Connect VTVM between 2nd AMPL METER jack J-504 and ground, using D-C probe of VTVM.

   b. Measure second tripler output. Level indicated on VTVM should be approximately -1.0 volt.

5. Second Oscillator, V-505.

   a. Touch D-C probe of VTVM to pin 1 of V-301. Connect negative lead of VTVM to ground.

   b. Measure second oscillator output. Level indicated on VTVM should be approximately -4 to -10 volts.

C. Check image rejection ratio as follows:

1. Set receiver controls as indicated in Step A, R-F Sensitivity.

2. Connect test equipment as indicated under R-F Sensitivity.

3. Adjust R-F GAIN control of receiver to setting determined in Step A-5, R-F Sensitivity.

379.4
80.8
298.6

4. Turn SQUELCH switch to OFF.

5. Tune signal generator to image frequency. (Channel frequency minus twice the 1st I-F frequency)

6. Set output of signal generator to 350,000 uv, 30% modulated at 1000 cps, and refine frequency adjustment to give maximum output as indicated on output meter.

3.5dd

7. Adjust receiver A-F GAIN control to give an output level of 10 mw.

8. Retune signal generator to channel frequency.

9. Adjust signal generator output level to about 5 uv, 30% modulated at 1000 cps, and tune signal generator for maximum indication on the output meter.

10. Readjust output of signal generator to develop the same output as in Step 7 above (10 mw). Image rejection should be at least 80 db. Record value obtained on attached performance data sheet.

93.0

D. AVC Characteristics

1. The design specification for this equipment limits the maximum total change of output to 4 db for an input range of 10 to 100,000 uv. With an input of one volt, the audio output level is not to vary more than 6 db above one watt. To check the AVC characteristics, proceed as follows:

NOTE: An output level of one volt is not obtainable on the signal generators used in this laboratory. Therefore, measurements requiring use of a one volt input to the receiver will not be made.

a. Adjust the R-F GAIN control as explained under "R-F Sensitivity".

b. Set the A-F GAIN control to produce one watt output with 50 uv input, which is the 0 db reference level used during the AVC measurement.

c. Vary the output of the signal generator to 10, 1,000, 10,000 and 100,000 uv, while maintaining 30% modulation at 1,000 cycles per second. The output variation should be less than 4 db for signals up to the 100,000 uv level. Record results on the attached performance data sheet.

E. Audio Power Output

1. The audio power output for this receiver, should be at least one watt across 600 ohms with an R-F input signal of 50 uv modulated 30 percent at an audio rate of 400 to 3,000 cps. In order to check this requirement, proceed as follows:

a. Set the A-F GAIN control to the extreme clockwise position.

b. Set the output of the signal generator to 50 uv, 30 percent modulated with 400 cps and then 1,000 cps (both internal).

c. The power output should indicate at least one watt for both of these frequencies. Record results on the attached performance data sheet.

F. Squelch Check

1. Set receiver controls as indicated in Step A-1, "R-F Sensitivity".

2. Connect test equipment as indicated under Step A-2, 3, "R-F Sensitivity".

3. Set R-F GAIN control to setting determined in Step A-5, "R-F Sensitivity".

4. Turn SQUELCH switch to OFF.

5. Set signal generator output to 3 uv, modulated 30% with 1000 cps on channel frequency.

6. Refine signal generator frequency adjustment for maximum indication on the output meter.

7. Turn SQUELCH switch to ON. (AUDIO QUIETING DB control should be maximum counterclockwise).

8. Reduce signal generator output to minimum. Output level should be extremely low or zero on output meter.

9. Slowly increase signal generator output level until the squelch opens and an output is noted on the output meter. Record this level (squelch threshold) on the attached performance data sheet.

G. Check receiver for any missing parts, nuts screws, etc. Replace as required. Replace dust cover and reinstall receiver in rack.

REVIEW QUESTIONS

A. Complete the applicable review questions and submit to instructor on the day following completion of the experiment.

Name Charles G. Turner

R-361 Serial Number 3746 Date March

6 mc I-F Measurements

70,000 uv at Point I to produce - 1.0 volt DC at Point H.
2,000 uv at Point J to produce - 1.0 volt DC at Point H.
150 uv uv at Point K to produce - 1.0 volt DC at Point H.
320 uv uv at Point L to produce - 1.0 volt DC at Point H.

6 mc I-F Center Frequency .0015 mc.

6 mc I-F Bandwidth 1000 uv (6 db) 68 kc.
500,000 uv (60 db) 159 kc.

Noise level squelched at R-F GAIN control setting of 9.5 dd.

R-F SENSITIVITY: 3 uv for 10 db S/N ratio.

CHANNEL FREQUENCY: 379.1 mc.

OSCILLATOR TUNING

1-st Oscillator:

Voltage at J-501 — 1.5 v. DC Voltage at J-503 -3 v. DC
Voltage at J-502 — 1.7 v. DC Voltage at J-504 -2 v. DC

2nd Oscillator Voltage at Pin 1, V-301 -7 v. DC

IMAGE REJECTION: Image Feequency 298.6
Image Rejection Ratio 93.0 db.

AVC CHARACTERISTIC

3 db change in output from 10 to 100,000 uv input.

AUDIO POWER OUTPUT

50 uv input, 400 cycles 300 w.
1000 cycles 600 w.

SQUELCH THRESHOLD .125 uv.

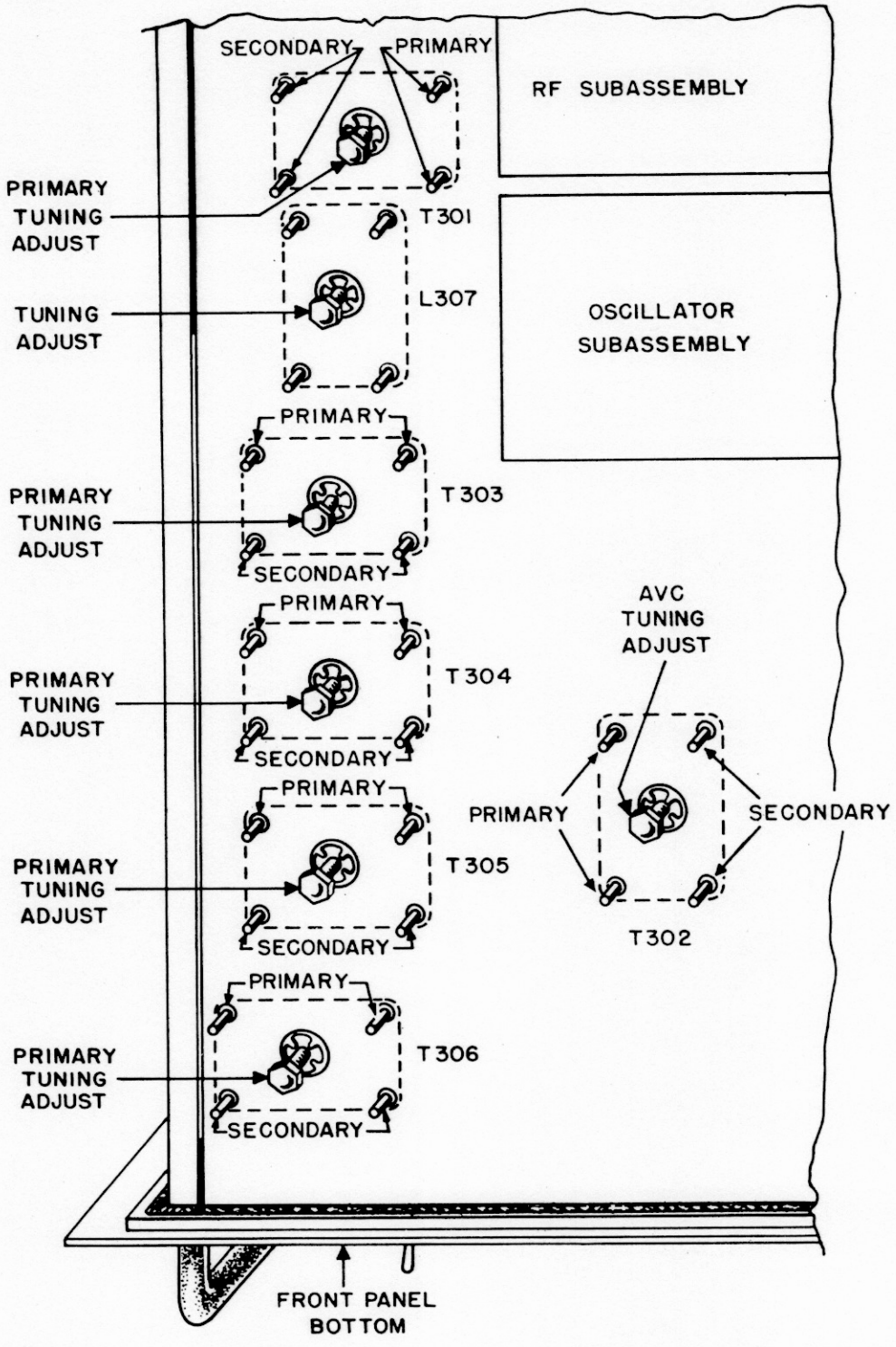

Radio Receiver R-361/GR, Bottom View, Dust Cover Removed

Rev. 1/59

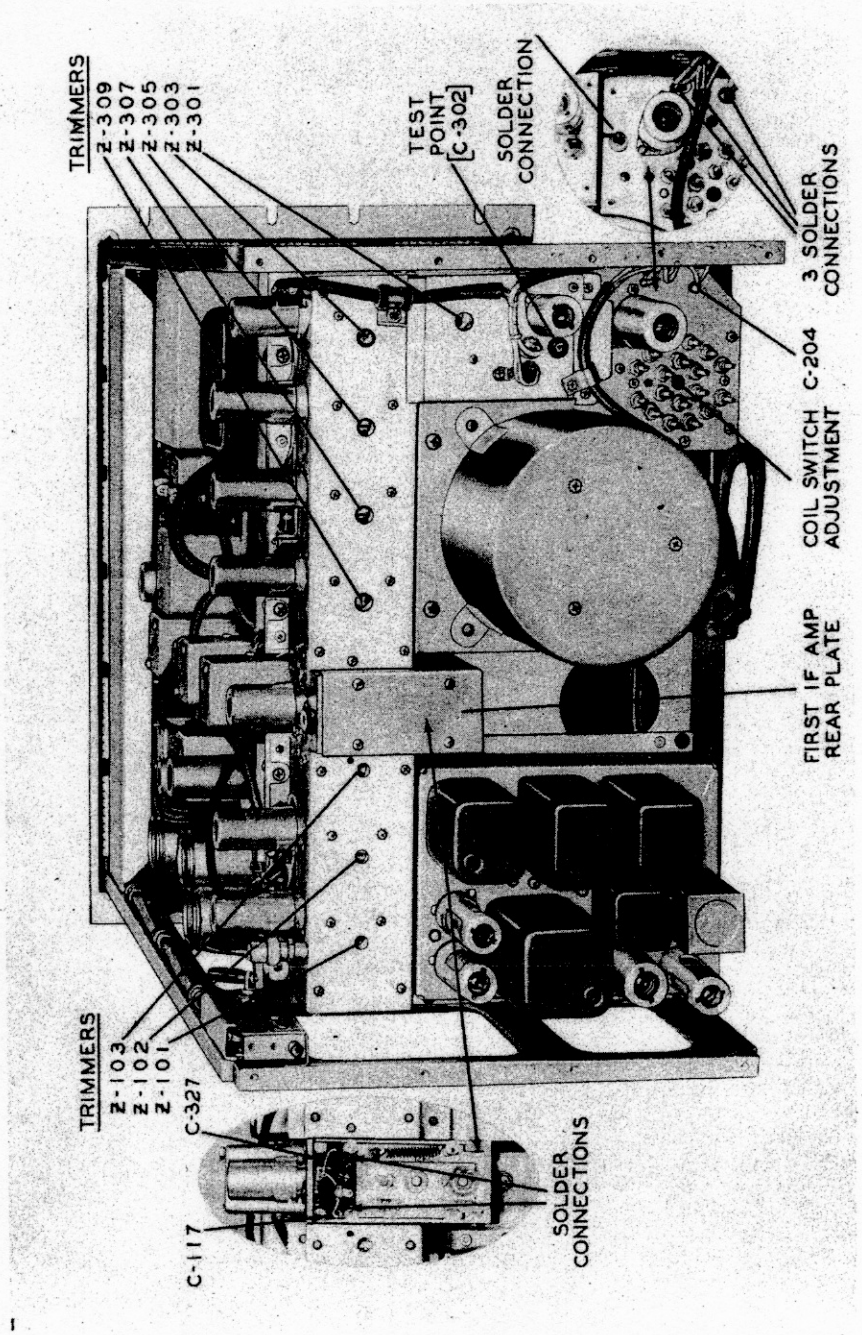

Radio Receiver R-278/GR, Rear View

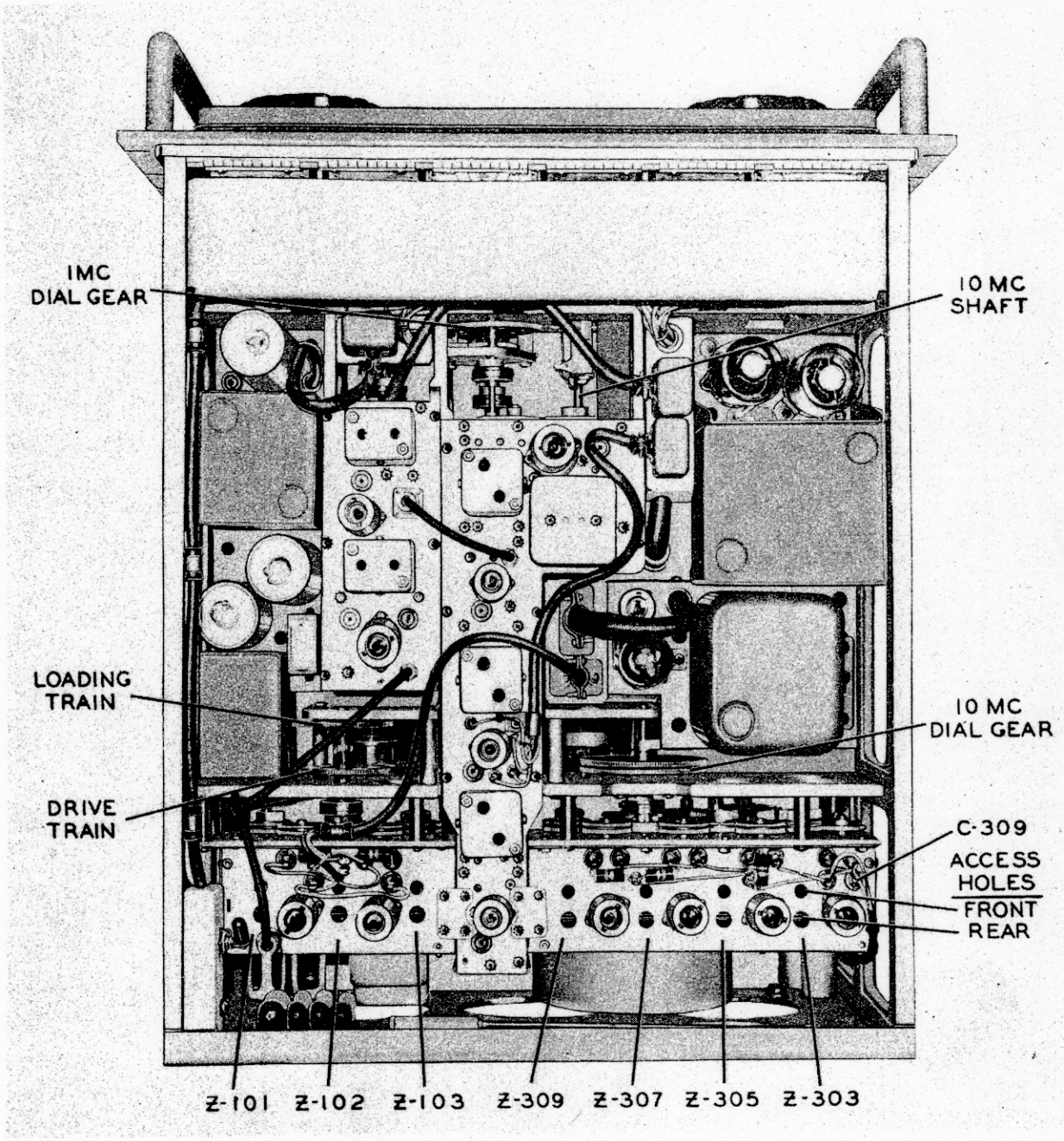

Radio Receiver R-278/GR Alignment Points, Top View

Rev. 1/59

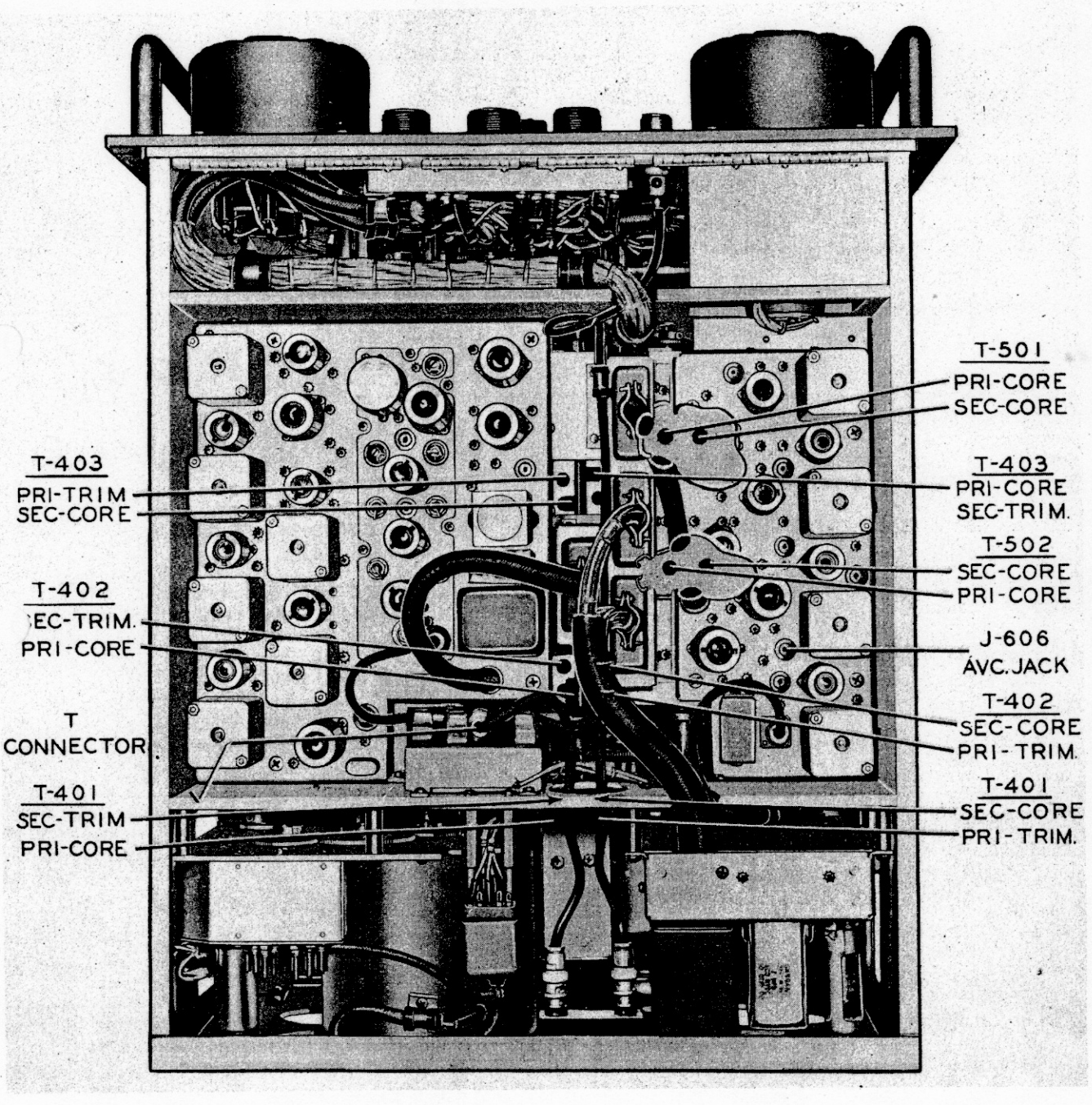

Radio Receiver R-278/GR Alignment Points, Bottom View

CAA AERONAUTICAL CENTER
AIR NAVIGATION FACILITIES BRANCH
COMMUNICATIONS EQUIPMENT UNIT

UHF MILITARY EQUIPMENT LABORATORY EXPERIMENT

Name Charles G. Turner

Date 3/2/59

T-282 TRANSMITTER AND MD-141A MODULATOR-POWER SUPPLY

PURPOSE OF EXPERIMENT

The purpose of this experiment is to familiarize the student with the physical and electrical characteristics of the T-282 Transmitter and MD-141A Modulator-Power Supply. Approved methods of transmitter tune-up are employed and the student is required to adjust and measure the modulation percentage of this equipment.

REFERENCES

Handbook Service Instructions, Radio Transmitting Set AN/GRT-3, AN #16-30GRT3-2.

Handbook Operating Instructions, AN #16-30GRT3-1.

UHF Military Equipment Course Material.

Lecture Notes.

EQUIPMENT REQUIRED

T-282/GR Transmitter

MD-141A/GR Modulator-Power Supply

RF Load, 52 ohm Termaline

Multimeter

Audio Oscillator

Audio Attenuator

PROCEDURE I (Familiarization)

CAUTION: Extreme care must be used in handling Transmitter and Modulator-Power supply units to avoid personal injury and major damage to equipment. Always use two men to handle these units and coordinate your movements since they are quite heavy. Keep hands and feet clear to avoid serious personal injury in case of mishap. Observe usual precautions to avoid electrical shock.

A. Transmitter Familiarization

1. Disconnect A-C Power Input cable from Modulator-Power Supply.
2. Remove all cable connectors from rear of T-282 Transmitter.
3. Move transmitter to work table and remove dust cover.
4. Loosen all dial locks.
5. Loosen and pull forward "Monitor-Screen Modulator" Unit for inspection.
6. Remove the air filters and the perforated plates beneath them. (Be careful not to lose the mounting screws.)
7. Note location of all tubes.
8. Locate the three interlock switches associated with access panels.
9. Observe location and markings on the one switch and six potentiometers on the "Monitor-Screen Modulator Unit".
10. Put the Monitor-Screen Modulator unit back in place.
11. Make sure all dial locks are loose.
12. Rotate MAIN TUNING (crank) dial to one end of its range, then back to the other end.

    a. Note effect on other dials.
    b. Which dials are effected by MAIN TUNING?

PA Grid – PA Plate – 2nd doubler Plate
Osc & 1st dblr Plate Driver Plate DRIVER Grid

13. Rotate dials individually and observe (where possible) which components are varied and how much?

14. Locate on right side of unit, the following:

    a. Splien Wrenches

    b. Interlock Switch S-901

15. Locate on bottom of Unit:

    a. Low Pass Filter

    b. Micro-Match Directional Coupler

    c. Terminal Boards E-901, E-902 and E-903

    d. Push-to-Talk Relay

16. Examine on front of Transmitter.

    a. Test Points

    b. Crystal Holder

17. Inspect fuses for correct type and rating.

18. Trace the path of air flow from front filter through blower to rear filter.

    a. Which tubes are not cooled by the blower?

19. Replace Perforated Covers, Air Filters and Dust Cover.

20. Return transmitter to rack and re-connect cables to transmitter only.

B. Modulator-Power Supply Familiarization

1. Remove Modulator-Power supply from rack and place on small work table.

2. Remove rear Air Filter.

3. Locate and examine the following: (A flashlight will help).

    a. Outlet air filter interlock and its "cheater".

    b. Location of 6AL5W tube socket

c. Fuses (Check for proper ratings)

d. Buck-Boost Switch

e. Line, Control and Ground terminal block

f. Cable and Power connectors

4. Carefully remove front air filter and fan motor as a unit. (Loosen four thumb screws and pull straight out on handles).

5. Observe that a small silver plated vane protrudes into the opening.

a. This is an air controlled switch

b. Do not bend or distort it

6. Note location of tubes and components visible within unit.

7. Locate and identify:

a. Power Switch

b. Plate Switch

c. Limiter Threshold Control

d. Audio Gain Control

e. Push-to-Talk, Carrier-On Switch

f. Emergency-Normal Switch

g. Narrow-Broad Switch

h. Blower Fan Connector Plug

i. Test Points

j. Indicator Lamps

k. Interlock Switch

8. Replace fan and air filters.

a. Use caution to replace in proper position

9. Replace dust cover and reinstall in rack.

C. Distribution Panel J-390/GR Familiarization

1. Note A-C power busses and terminal strips.

2. Note plastic safety cover with holes for measuring A-C voltages.

PROCEDURE II (Adjustments)

A. Reconnect all interunit cables and A-C power cable to equipment and turn POWER ON-OFF switch to ON.

B. Terminate transmitter output in R-F dummy load.

C. Tune Transmitter:

1. Crystal frequency is marked on oven cover. Determine output frequency by multiplying crystal frequency by 36.

2. Turn the TUNE-OPERATE switch to the TUNE position.

3. Place CARRIER ON -PUSH TO TALK switch in CARRIER ON position.

4. Set METER 1 SELECTOR SWITCH to "1" METER 2 SELECTOR SWITCH to CARRIER WATTS.

5. With all tuning dial locks loose, (from above) set MAIN TUNING dial to desired frequency and tighten the dial lock.

6. Turn the OUTPUT COUPLING control to its extreme counterclockwise position.

7. Turn the PLATE ON-OFF switch to the ON position. The red indicator above the switch will light. A reading of approximately .04 milliampere should be observed on METER 1.

8. Set METER 1 SELECTOR SWITCH to position "2" and tune OSC & 1ST DOUBLER PLATES control until METER 1 reads maximum. Lock control, exercising caution that its setting is not disturbed. This caution should be exercised when locking other tuning controls, as required in the following steps.

#1

#3

9. Set METER 1 SELECTOR SWITCH to position"3" and tune the 2ND DOUBLER PLATE control until METER 1 reads maximum. Lock control.

#4

10. Set METER 1 SELECTOR SWITCH to position "4" and tune the BUFFER AMPLR PLATE control until METER 1 reads minimum.

#5

11. Set METER 1 SELECTOR SWITCH to position"5" and tune the DRIVER GRID control until METER 1 reads maximum.

12. Readjust the BUFFER AMPLR PLATE and DRIVER GRID controls to obtain a maximum reading on METER 1. Several successive adjustments of these two controls will be necessary before a true maximum reading can be obtained. Lock both controls.

13. Set METER 1 SELECTOR SWITCH to position "7" and tune the DRIVER PLATE control until METER 1 reads minimum. If a minimum reading can not be observed, proceed with the next step.

14. Set METER 1 SELECTOR SWITCH to position "6" and tune the PA GRID control to obtain the maximum reading on METER 1.

15. With METER 1 SELECTOR SWITCH still on position "6", manipulate the PA GRID and DRIVER PLATE controls until METER 1 reads maximum. If resultant reading on meter is greater than 0.4 detune DRIVER GRID control until meter reads 0.4. Lock both controls.

16. Tune the PA PLATE control until METER 2 reads maximum.

17. Set METER 1 SELECTOR SWITCH to position "8", throw the TUNE-OPERATE switch to the OPERATE position and tune the PA PLATE control until METER 2 reads maximum.

18. Generally, it is desirable to leave the OUTPUT COUPLING control at the extreme counterclockwise position (step 6). If 100 watts output cannot be achieved by tuning of the PA PLATE control alone, manipulate the PA PLATE and OUTPUT COUPLING controls until at least 100 watts output is achieved. (Between 90 and 100 watts is acceptable for the school equipment) Normal indication on METER 1 is 0.50 to 0.62 milliamperes.

19. Recheck above tuning. Note that plate circuits (except the P.A.) are tuned for maximum grid drive. All grids (except the Driver Grid) are tuned for maximum grid current.

NOTE: Also see table 6-1, Minimum Performance Standards, Field, Handbook Service Instructions, AN16-30GRT3-2 as required.

D. Modulation Adjustments

1. The T-282 Transmitter was not originally designed for use with CAA transmitter control equipment. The carbon microphone is not commonly used in CAA stations and the methods described in Paragraphs 2-10 and 2-12 of AN16-30GRT-1 are likewise not suitable for CAA use. Regional modifications have been made to separate the audio and control circuit inputs, but to our knowledge no standard has been adopted. We shall use a 600 ohm "normal" audio line input and utilize the CARRIER-ON position of the PUSH-TO-TALK - CARRIER ON switch for control.

2. Reduce the GAIN control setting on the MD-141A to zero.

3. Turn the LIMITER THRESHOLD adjustment as far counterclockwise as it will go.

4. Connect apparatus as follows:

   a. Audio oscillator output to CA-403 Attenuator input. Multimeter is connected across audio oscillator output.

   b. CA-403 Attenuator output is connected to 600 ohm input terminals, AUDIO LINE INPUT, at lower left rear side of modulator MD-141A.

5. Adjust audio oscillator and attenuator for zero db (6 mw) at 1000 cycles, into a 600 ohm line.

6. Calibrate METER 2 as follows:

   a. Turn METER 2 SELECTOR SWITCH to SET CAL.

   b. Key transmitter (CARRIER ON).

   c. Turn CALIBRATE control, next to METER 2 SELECTOR SWITCH until pointer of METER 2 indicates CAL at right end, bottom scale.

7. With METER 2 SELECTOR SWITCH on % MOD, advance the MD-141A GAIN control until METER 2 reads 95% modulation.

   a. Record the gain control setting, estimating tenths of dial divisions _____.

8. Calculate the percentage of modulation that is 1.5 db below 95%:

   $db = 20 \log \frac{95}{x}$ Answer 79.9 or 80%

9. Adjust LIMITER THRESHOLD control to reduce the percentage of modulation, as indicated on METER 2, to this figure.

10. Plug in a carbon microphone and advance gain control until normal voice modulation is evident as you speak into it.

    a. Note limiting action apparently keeps the modulation below about 75%.

    b. Monitor output by plugging headphones into SIDETONE OUTPUT jack on front panel of transmitter.

E. Recording of Data

1. Record all meter readings on the attached meter reading form.

2. Contact an Instructor for a final check of the transmitter adjustments.

REVIEW QUESTIONS

A. Complete applicable review questions and submit to instructor on the day following completion of the experiment.

T-282 TRANSMITTER AND MD-141A MODULATOR-POWER SUPPLY

RECORD OF METER READINGS AND ADJUSTMENTS

Name _____

Date _____

Transmitter Serial Number		
Crystal Frequency		
Output Frequency		
CIRCUIT	METER 1 Indication	Current
Oscillator Grid		
2nd Doubler Grid		
Buffer Grid		
Buffer Plate		
Driver Grid		
P. A. Grid		
Driver Plate		
P. A. Plate		
	METER 2	
Power Output, watts		

CAA AERONAUTICAL CENTER
AIR NAVIGATION FACILITIES BRANCH
COMMUNICATIONS EQUIPMENT UNIT

UHF MILITARY EQUIPMENT LABORATORY EXPERIMENT

Name Charlie Turner

Date _____

R-278B RECEIVER FAMILIARIZATION

PURPOSE OF EXPERIMENT

The purpose of this experiment is to familiarize the student with the physical and electrical characteristics of the R-278B receiver and associated components of the AN/GRC-27 Radio Set. The student will become acquainted with the operating adjustments of this equipment and will receive training in the removal and replacement of subassemblies and the mechanical synchronization checks necessary to insure proper operation.

REFERENCES

Handbook Operation and Service Instructions, Radio Set AN/GRC-27, To #16-30GRC27-1.

Handbook Maintenance Instructions, Receiver Group OA-192/GR, To #16-350A192-3.

Lecture Notes.

UHF Military Equipment Course Material.

EQUIPMENT REQUIRED

Radio Receiver, Type R-278B/GR.

Antenna, Type AT-197/GR.

Control Indicator, Type C-806/GR.

A-F Amplifier, Type AM-447/G.

Tools furnished with receiver.

Tool Box with assorted tools.

Special frequency selector extension cable.

PROCEDURE I (Familiarization)

A. Antenna, AT-197/GR.

1. Remove, examine, and re-install:

a. Simulated disc.

b. One or more rods of simulated cone.

2. Remove antenna cable from receiver and antenna and examine cable and connectors. Replace cable.

a. The coaxial cable prescribed for long runs is RG-17U. Ask Instructor to show sample of this cable if it is unfamiliar to you. Short jumpers of RG-8/U are used at either end, however, as they are more flexible.

B. Control Indicator, C-806/GR.

1. Remove rear cover and locate, both on the schematic inside the cover, and on the unit:

a. Receiver and transmitter channel selectors.

b. Headset Jack

2. The remainder of the circuitry provides an amplified sidetone from the transmitter for monitoring purposes. A-C power does not have to be supplied to the unit to control the receiver. Replace cover.

C. A-F Amplifiers, AM-447/G

1. Remove an AM-447/G Amplifier by lifting and sliding it out. Lay amplifier on bench. Using the schematic on under side of bottom plate of amplifier, locate both on the schematic, and on the unit:

a. Input and output connections; impedance

b. GAIN control

(1) Used in conjunction with VOLUME SPEAKER control to set the output level of the amplifier.

c. VOLUME SPEAKER control

(1) Sets the output level at which volume limiting begins. (See b, (1)

2. This amplifier is of the volume limiting type, similar to that of CAA line amplifiers. Locate on the schematic the following:

a. 6H6 limiter tube.

b. Its load resistor R-104 and time constant filter capacitor C-105.

c. Variable-mu controlled tube 6SK7.

3. Replace cover and amplifier.

D. Receiver, R-278B/GR

1. From the nameplate, record:

Type R-278B/GR Serial No. 934

Manufacturer Delco Remy Div. Gen. Mtrs. Div.

2. Remove receiver from rack and place on front handles on small work table.

3. Remove rear cover by loosening the four Dzus fasteners. Locate both on the schematic drawings on the cover and on the receiver itself, these sub-units:

a. Frequency selector

b. R-F low pass filter

c. R-F Amplifier

d. Main oscillator

e. Frequency multiplier-amplifier

f. First I-F amplifier

g. Second I-F amplifier. Note crystals just visible at rear of sub-unit.

h. Third I-F amplifier

i. Audio amplifier

j. Power supply rectifier

k. Power supply filter

l. Interlock switch. Note disabling feature

m. Power cable CX-1541/U

n. Local control cable CX-1540/U. Where it goes.

4. Locate on the front panel the operating controls described in the Operation and Service Instruction Book for the AN/GRC-27 Radio Set, Paragraph 4-10, Page 23.

5. In addition to physical location, trace the following controls on the schematic and note their function:

a. R-F GAIN control

(1) Adjusts squelch threshold level.

(2) Effective only in LOCAL position of R-F GAIN switch.

(3) Controls gain of R-F and I-F amplifiers.

b. A-F GAIN control

(1) Controls only the volume to the PHONES jack on the receiver and to terminals G and H of the AUXILIARY CONTROL jack.

(2) Is in the MAIN or high level output circuit (push-pull 6AQ5's). 3 watts max.

c. Low level audio output from first audio amplifier V-801 (12AU7) to pins N and I of LOCAL CONTROL jack J-1214 and pins E and F of AUXILIARY CONTROL jack J-1215.

(1) +10 dbm maximum to 600 ohm termination.

(2) Not affected by setting of A-F GAIN control.

(3) The AUDIO CT (center-tap) connections to pins G and H of LOCAL CONTROL jack (for d-c simplexing) is not likely to be used.

PROCEDURE II (Operating Adjustments)

A. Receiver R-278B

1. With receiver on work table, connect A-C power, antenna, and local control cables to receiver. Turn on A-C power to receiver.

2. Adjust receiver controls according to the Operation and Service Instruction Book, Paragraph 3-28, Page 17 - R-F GAIN switch on LOCAL. Pre-set the following frequencies, setting as indicated:

1. 257.8 mc - Will Rogers Tower
2. 363.8 mc - Tinker RAPCON
3. 225.4 mc
4. 379.4 mc
5. 255.4 mc - Will Rogers ATCS
6. 335.8 mc
7. 287.0 mc - GCA
8. 289.4 mc - GCA
9. 275.8 mc
10. 236.6 mc - Tinker Tower

Manual: 243.0 mc - UHF Emergency Frequency

B. Control Indicator, C-806/GR

1. Check control indicator by switching to each channel. (Channel Selector switch on receiver must be in REMOTE position).

2. Observe positioning action of receiver tuning gears while switching channels.

PROCEDURE III (Removal and replacement of subassemblies)

A. Frequency Selector Unit Removal

1. Set receiver on its rear, so that the front of the receiver is up.

2. Turn R-F and A-F GAIN controls to O and connect A-C power cable to receiver. (Antenna cable and local control cable are not connected to receiver)

3. SAFETY PRECAUTION - Disconnect A-C cable from receiver after tuning, but before removing or replacing frequency selector.

4. Position the frequency selector unit to 390.0 mc. In case the system has gone "dead" or is mechanically jammed, so that it is not possible to set up this frequency, record the frequency at which the frequency selector is tuned before removal and disassembly. 390.0 Oldham 257.

5. Remove twelve #4 flat-head screws and eight #6 round-head screws on the outside edge of the frequency selector unit.

6. Remove connector P-1101 from J-1211.

7. Slowly lift straight up on the released unit, being careful not to jar or scrape any of the mounted elements against the frame.

8. Retain Oldham couplers.

9. Place frequency selector unit upside down on a 4 inch prop under motor. Remove windowed front plate using tools provided and block between sections so that the dials will turn freely.

10. Connect special extension cable between unit and receiver. Apply A-C power to receiver.

11. Observe operation of unit while switching channels.

    a. Set MANUAL preset switches to 222.5 mc. Set CHANNEL 1 preset switches to 397.9 mc. Change CHANNEL SELECTOR switch to CHANNEL 1.

    b. Observe the order in which the dials commence rotating when the channel selector is switched to MANUAL.

    c. Observe the order in which the dials stop rotating when the CHANNEL SELECTOR is switched to either channel.

    d. With the CHANNEL SELECTOR on MANUAL, change the MANUAL pre-set switches one at a time.

Maximum inductance at zero and slug is all the way to the top of the coil.

IMPORTANT!!

12. Identify each switch, relay, etc., of the frequency selector unit, referring to the schematic drawing printed on the receiver cover.

13. Position the unit to 390.0 mc., remove extension cable, and replace front plate. Reinstall the frequency selector unit carefully in the receiver. See that the receiver tuning shafts are correctly positioned, and that the Oldham couplers are seated before tightening screws.

    a. After installation of unit, these three couplers are visible from the bottom of the receiver. With the frequency selector unit still set on 390.0 mc, the scribe lines on the couplers should align with the scribe lines on the indicator blocks which are attached to the receiver frame.

    b. The calibrated dial ahead of the first i-f amplifier should indicate "0" with the frequency selector unit set to 390.0 mc.

    c. The calibrated dial ahead of the frequency-multiplier amplifier should indicate "39" with the frequency selector unit set to 390.0 mc.

    d. The iron cores in the I-F transformers in the second i-f amplifier should be in the position where the greatest amount of core is in the coil. Check by using a small screwdriver as a gauge and cycling .1 mc autopositioner from .9 to .0 mc.

B. R-F Amplifier

1. Remove r-f amplifier according to the following procedure:

    a. Position frequency selector unit to 360.5 mc.

    b. Set receiver on its handles.

    c. Remove large rear plate.

    d. Remove rear plate from first i-f amplifier unit.

    e. Disconnect capacitor C-117 from pin 1 of V-401.

f. Disconnect antenna connector P-1201 from J-101.

g. Remove power connector P-101 from J-1201.

h. Remove small grounding plate connecting r-f amplifier to first i-f amplifier.

i. Remove mounting captive screws (red-headed).

j. Lift out unit. Retain the center part of the Oldham coupler.

2. Remove rear plate of unit and observe operation of tuners while rotating coupler by hand.

a. Refer to schematic diagram printed on side cover of unit and to detailed theory of operation in instruction book or course material.

(1) Note method of shielding and compartmentation.

(2) Note use of integral condensers for grounding grids of 6J4's (Pins 1, 5, 6)

3. Check internal synchronization as follows:

a. Set key of coupler in vertical position with red dot up.

b. Using this as a reference on each r-f tuner, the movable bar must line up with the stator mounting rivet (for short stator bar). This is the 360.5 mc position.

4. Do not make any adjustments without consulting instructor.

5. Do not install the r-f amplifier unit at this time.

a. When directed to reinstall r-f amplifier, have key of Oldham coupler in vertical position with red dot up and receiver frequency set to 360.5 mc.

C. Main Oscillator and Frequency Multiplier-Amplifier

1. For the purpose of familiarization, it is convenient to remove these sub-units together.

2. Position frequency selector unit to 220.0 mc.

3. Set receiver face downward on its handles.

4. Remove small grounding plate connecting frequency multiplier-amplifier to first i-f amplifier.

5. Remove solder connection between C-327 and Pin 2 of V-401.

6. Remove cable connection P-201 from J-1202.

7. Remove eight captive mounting screws (red-headed), (four each unit).

8. Do not remove connecting plate or soldered connections between main oscillator and frequency multiplier-amplifier.

9. Carefully lift the two units out together (do not try to separate). Lay on bench with gears down. Retain the Oldham couplers.

10. Remove top rear cover and right side schematic cover (as viewed from rear) of frequency multiplier-amplifier. Remove the cylindrical crystal cover of the oscillator by removing screws (3) securing cover to base by right angle brackets. Look over the construction of the units, referring to schematic diagrams on units and detailed theory of operation in instruction book or course material.

11. Check internal synchronization as follows:

    a. Set key of coupler on main oscillator in a vertical position with red dot down.

    b. With this as a reference, the crystal selector switch should be making contact with crystal #18 (220.0 mc position).

    c. For this same condition, the coil selector switch should be making contact with coil #L-222 (220.0 mc position). Hold a flashlight over the center hole of the coil cover. The switch contact for coil #22 (L-222) may be seen directly below the smaller hole between coils 22 and 39.

    d. Set key of coupler on frequency multiplier-amplifier in a vertical position with red dot up.

e. With this as a reference, the step tuner Z-301, (tapered toroid coil) must be making contact with the largest turn (last turn).

f. On each tuner, the movable contact is making contact with the end of the inductance ring and lines up with the mounting eye of the ring. (Visible by looking along bottom of tuner toward front with rear cover of unit off.) This is the 220.0 mc position.

12. Replace only round cover on main oscillator and rear cover of frequency multiplier-amplifier. Do not install the units.

a. When directed to reinstall main oscillator, have key of Oldham coupler in vertical position with red dot down and receiver frequency set at 220.0 mc.

b. When directed to reinstall frequency multiplier-amplifier, have key of Oldham coupler in vertical position with red dot up and receiver frequency set at 220.0 mc.

D. First I-F Amplifier

1. The first i-f amplifier in the R-278B receiver and the i-f oscillator unit in the T-217A transmitter are quite similar. Since the i-f oscillator unit is removed during the transmitter experiments, disassembly of the first i-f amplifier in the receiver is omitted.

2. Note that access to trimmers and cores of i-f transformers in first i-f amplifier is through the bottom of the receiver.

3. Refer to receiver schematic diagrams for location of stages, and to instruction book or course material for detailed theory of operation.

E. Second I-F Amplifier

1. Remove the second i-f amplifier according to the following procedure:

a. Set receiver in its normal position.

b. Position the frequency selector unit to 399.9 mc.

c. Remove connector P-501 from J-1205.

d. Remove connector P-502 from J-608.

(1) In order to perform step d. in the field, it may first be necessary to remove the audio amplifier unit. However, since the middle cable clamp has been removed from the units here in the school, it will not be necessary to remove the audio amplifier.

e. Release captive mounting screws (red-headed).

f. Remove unit by sliding to the rear and lifting up.

2. Remove cover. Look the unit over, referring to the schematic diagrams, and the detailed theory of operation in the instruction book or course material.

3. Check internal synchronization as follows:

a. Set key of coupler in vertical position with red dot up.

b. With this as a reference, the cam follower should be 8 degrees clockwise from the low point of the cam and the crystal switch should be making contact with crystal #10. (This is the 399.9 mc position).

4. Replace cover, but do not install unit.

a. When directed to reinstall second i-f amplifier, have key of Oldham coupler in vertical position with red dot up and receiver frequency set to 399.9 mc.

F. Third I-F Amplifier and Audio Amplifier

1. It is not necessary to remove these units at this time.

a. Removal of the third i-f amplifier will be accomlished during the alignment experiment.

2. Locate the various stages in the third i-f amplifier and audio amplifier and briefly study their principles, referring to schematic diagrams and detailed theory of operation in the instruction books or course material.

G. Power Supply Rectifier and Power Supply Filter

1. It is not necessary to remove these units.

2. Locate the distinctive features of these units, referring to schematic diagrams and the detailed theory of operation in instruction books or course material.

H. Receiver Tuning - Mechanical Drive

1. The removal of sub-units has made the intermediate gear train mechanism accessible to view.

2. Referring to Paragraphs 3-124, Pages 36-39 of the Instruction Book, or to the appropriate course material, observe the operation of the intermediate gear train and drive shafts. Note which sub-units are tuned each time. With POWER switch ON:

   a. Place the CHANNEL SELECTOR switch on MANUAL.

   b. Change the "tens" megacycle MANUAL pre-set switch to a higher number.

   c. Change the "tens" megacycle MANUAL pre-set to a lower number.

   d. Change the "units" megacycle MANUAL pre-set switch to a higher number.

   e. Change the "units" megacycle MANUAL pre-set switch to a lower number.

   f. Change the "tenth" megacycle MANUAL pre-set switch to a higher number.

   g. Change the "tenth" megacycle MANUAL pre-set switch to a lower number.

   h. Set the "units" switch to 9 and observe the position of the radius stepped periphery cam on the 1 mc shaft. Then change to 8, 7, etc to 0, 9, observing the r-f amplifier tuning shaft position at each step.

I. Assembly of sub-units

1. After checking with the Instructor, reinstall sub-units in reverse order of removal, following the applicable instructions listed above.

CAUTION: Allow a nominal clearance of .010 inch between sections of Oldham couplers when tightening captive screws.

2. To install any one of the mechanically coupled sub-units into the receiver frame, set the key of the coupler in a vertical position with red dot up (except for the main oscillator which must have red dot down) and have the receiver set to the assembly frequency for that unit. These assembly frequencies are:

Frequency Selector Unit - 390.0 mc
First and Second I.F. Amplifier - 399.9 mc
Main Oscillator - 220 mc
Frequency Multiplier-Amplifier - 220 mc
R-F Amplifier - 360.5 mc

3. Be certain to reinstall rear cover plate on first i-f amplifier.

4. Leave large rear plate off of receiver to facilitate the next experiment.

PROCEDURE IV (Mechanical Synchronization Checks)

A. Criteria for determining correct adjustment of mechanical drive system.

1. A-C Power Cable connected to receiver. Receiver POWER switch ON.

2. Make the following mechanical synchronization checks:

NOTE: The following checks are in addition to the checks made during the foregoing procedures and with them are considered sufficient for this experiment. A complete list of all mechanical checks is carried on Page 50A-50B of the Instruction Book.

a. With a frequency of xx9.9 selected, the red dots on the two couplers ahead of the first i-f amplifier should be in the up position.

b. With a frequency of xx9.9 selected, the iron cores in the i-f transformers of the first i-f amplifier should be in the position where the smallest amount of core is in the coil.

c. With a frequency of xx9.x selected, the crystal switch in the first i-f amplifier should be on position number "1" (40 mc crystal position)

d. With a frequency of xx0.x selected, the follower on the step cam in the rear gear train should be on the highest point on the cam.

e. With a frequency of 22x.x selected, the rotor bar in all four frequency multiplier-amplifier tuners should be opposite the eyelet at bottom of tuner (bar directly beneath driven shaft as viewed from top of tuner).

f. With a frequency of 390.x selected, the rotor bars in all three r-f amplifier tuners should be in a vertical position directly above their respective driven shafts.

g. With a frequency of 39x.x selected, the rotor contact of toroidal step tuner Z-301 should be on the smallest turn of the coil and should have tension holding contact against turn.

B. Operational Check

1. Connect antenna to receiver and make an operational check on one or more of the frequencies (used locally) listed in Procedure II, Paragraph A-2.

REVIEW QUESTIONS

A. Complete the applicable review questions and submit to instructor on the day following completion of the experiment.

CAA AERONAUTICAL CENTER
AIR NAVIGATION FACILITIES BRANCH
COMMUNICATIONS EQUIPMENT UNIT

UHF MILITARY EQUIPMENT LABORATORY EXPERIMENT

Name Charles G. Turner

Date 3/27/1959

R-278B RECEIVER ALIGNMENT

PURPOSE OF EXPERIMENT

The purpose of this experiment is to train the student in R-F and I-F alignment of the R-278B/GR Radio Receiver and to acquaint the student with the methods of measuring performance. In addition, it permits the student to gain experience in use of CAA test equipment and in the detection of abnormal receiver operation.

REFERENCES

Handbook of Maintenance Instructions, Radio Receivers, R-278/GR, R-278A/GR, and R-278B/GR (T.O. No. 16-350A192-3), revised June 30, 1953.

UHF Military Equipment course material

Instruction books for test equipment (as required)

Lecture Notes

EQUIPMENT REQUIRED

Receiver, Type R-278B/GR

UHF Signal Generator, Hewlett-Packard Model 608D

HF Signal Generator, Measurements Corporation Model 65B

UHF Frequency Meter, Gertsch Model FM-3

HF Frequency Meter, BC-221

Vacuum Tube Voltmeter

Output Meter, General Radio 583A

Alignment Tools

Hand Tools

2200 ohm Resistor w/clip on each end

Capacitor, .05mfd w/clip on one end

Head Set

PROCEDURE I (Alignment)

A. General Instructions

1. Because of circuit differences between the Collins equipment for which the Maintenance Handbook is written, and the Delco equipment, which we have, the schematic drawings printed on the receiver cover and sub-units and in the binder of the instruction books should be used whenever possible.

B. Preparation of Equipment

1. Remove receiver from rack. Remove dust cover and place receiver on front handles. Remove large plate on rear of receiver. Turn on test equipment and receiver and allow a warm-up period of about 15 minutes. Use this time to check test equipment and read over experiment.

C. Alignment of Third I-F Amplifier

1. Accurately adjust the 65B signal generator output frequency to 2.05 mc by zero beating it against the BC-221 Frequency Meter.

2. Adjust receiver controls as follows:

a. R-F GAIN set at 10. A-F GAIN set to 0.

b. AVC TIME CONSTANT set in COMM position.

c. AVC switch in ON position.

d. SQUELCH switch in OFF position.

3. Remove Third I-F Amplifier unit from receiver frame and remove bottom cover plate.

4. Replace electrical connections to receiver.

5. Remove V-501 from Second I-F Amplifier.

6. Connect VTVM to AVC jack, J-606, or AVC jack on front of receiver.

7. Connect signal generator output to J-603 (grid of V-603) and adjust output to maintain AVC voltage of 2.5 to 3.5 throughout alignment procedure.

8. Tune the secondary and primary (bottom and top respectively) of coils of T-604 for maximum AVC voltage.

9. Connect signal generator output to J-602 and adjust output as before.

10. Shunt the primary of T-603 (terminals 1 and 2) with the 2200 ohm swamping resistor and tune secondary (bottom) coil for maximum AVC voltage. Shunt the secondary of T-603 (Terminals 3 and 4) with the swamping resistor and tune the primary (top) coil for maximum AVC.

    NOTE: Before attaching swamping resistor, turn plate voltage OFF by operating the tracking control switch.

11. Connect signal generator to J-607 and adjust output.

12. Tune T-602 using the same procedure as in step 10.

13. Connect signal generator to J-503 and adjust output.

14. Tune T-601 using the same procedure as in step 10.

15. Leave third i-f unit out, cables connected.

16. Replace V-501 in second i-f amplifier. Remove swamping resistor.

D. Alignment of Second I-F Amplifier

1. Adjust receiver controls as follows:

    a. Same as step C-2.

    b. Tenth mc frequency set at 0.5 mc.

2. Remove V-402 and V-404 from first i-f amplifier.

3. Check operation of third injection oscillator for each 0.1 mc crystal by changing 0.1 autopositioner from .0 to .9 and measuring d-c voltage at J-504. (Should be -6.0 to -15.0 volts)

4. Connect VTVM to AVC jack, J-606, or AVC jack on front of receiver. Reset .1 mc autopositioner to .5 mc.

5. Connect signal generator to J-404 and tune the signal generator to 9.5 by maximum AVC indication. Maintain signal level to give AVC voltage of 2.5 to 3.5 volts throughout alignment procedure.

6. Studs for adjusting the slugs of the second i-f amplifier transformers are accessible through the bottom of the receiver after the third i-f amplifier has been removed.

7. Adjust the slugs of both T-501 and T-502 for maximum avc voltage. In case the signal generator does not possess enough output to give an initial avc reading before the slugs are adjusted, position the slugs one and three sixteenth inches from the tops of the shield cans when the receiver is tuned to xxx.9 mc. After this has been accomplished, an initial avc reading should be noted following which peaking of the various slugs can be accomplished with the receiver tuned to xxx.5 mc.

8. Check the sensitivity of the amplifier at each of the ten frequencies between 9.0 and 9.9 mc by observing the signal voltage required to give a fixed avc voltage. If the ratio of maximum to minimum signal input voltage is greater than 1.12 to 1 (one db), retune the transformers at a frequency which will tend to lower the change in gain. For example, if after alignment of the transformers at 9.5 mc, the gain at 9.0 mc is slightly low, realign the transformers at a slightly lower frequency of about 9.4 mc. Recheck the gain ratio over the frequency range to see that it is less than 1.12 to 1. This completes alignment of the second i-f amplifier.

9. Replace third i-f amplifier.

10. Replace tubes V-402 and V-404 in first i-f amplifier.

E. Alignment of the First I-F Amplifier

1. Align second oscillator in first i-f amplifier to the same settings as used in Step C-2.

a. Adjust receiver controls.

b. Remove tubes V-102 and V-305.

c. The studs for adjusting the slug and trimmer condenser positions are accessible from the bottom of the receiver and may be adjusted with the special tool (skirted screwdriver) supplied with the receiver.

d. With the receiver tuned to xx9.9 mc, adjust the slugs in i-f transformers T-401, T-402, and T-403, so that the distance from the top of the shield cam to the slug is 1 and 11/32 inches.

e. Connect the VTVM to J-405.

f. Set the tuning to xx9.0 mc.
Tune T-403 primary trimmer for maximum meter indication.

g. Set the tuning to xx0.0 mc. Tune T-403 primary slug for maximum meter indication.

h. Repeat this procedure until no further improvement is noted.

i. Remove plug P-402 from jack J-505, and connect the the VTVM to J-404.

j. Set the tuning to xx9.0 mc and tune T-403 secondary trimmer for maximum meter indication.

k. Set the tuning to xx0.0 mc and tune T-403 secondary slug for maximum meter indication.

l. Repeat this procedure until no further improvement is noted.

m. This completes the oscillator alignment. As the receiver is tuned to each 1.0 mc position from 9.0 to 0.0 mc, check the tuning of the primary and secondary coils with a tuning wand. The tuned circuits associated with the oscillator should be very closely in resonance at every position.

n. With the VTVM in J-405, the d-c voltage indicated should be about -2.5 volts.

2. Align i-f stages in first i-f amplifier.

   a. Set the receiver tuning to xx5.0 mc. Connect the VTVM to J-606.

   b. Inject a 45.0 mc signal from the signal generator at J-402. Adjust the frequency of the signal generator for maximum avc voltage as read on the VTVM. (Use a 50 ohm coaxial line directly coupled to the signal generator with a 47-50 ohm carbon resistor loading the output end of the coaxial line). Adjust the input to give 3 or 4 volts on the VTVM. Maintain the input to give approximately this reading as the alignment progresses.

   c. Insert the iron end of the tuning wand into the primary of T-401 and tune the secondary trimmer (C-407) for maximum output. Remove the tuning wand from the primary and insert the iron end of the wand into the secondary. Tune the primary trimmer (C-403) for maximum output.

   d. Remove the tuning wand from T-401 and insert the iron end of the wand into the primary of T-402. Tune the secondary trimmer (C-417) for maximum output. Remove the tuning wand from the primary and insert the iron end of the wand into the secondary. Tune the primary trimmer (C-414) for maximum output.

   e. Set the receiver tuning to xx0.0 mc and inject a 40.0 mc signal at J-402 from the signal generator.

   f. Insert the iron end of the tuning wand into the primary of T-401 and check the tuning of the secondary with another tuning wand. If insertion of the brass end of the tuning wand increases the output indication, adjust the secondary slug for maximum indication by turning the slug stud counterclockwise. If insertion of the iron end of the tuning wand causes only a slight increase (.5 volts avc or less) do not change the slug adjustment.

   g. If insertion of the iron slug causes a greater increase, adjust the secondary slug for maximum indication by turning the slug stud clockwise.

   h. Repeat steps e, and f, for the secondary of T-401 and the primary and secondary of T-402.

i. Set the receiver tuning to 9.9 mc. Inject a 49.9 mc signal at J-402.

j. Insert the iron end of the tuning wand into the primary of T-401 and check the tuning of the secondary with another tuning wand. If insertion of the brass end of the tuning wand increases the output indication, adjust the secondary trimmer for maximum output. If insertion of the iron end of the tuning wand causes only a slight increase (approximately .5 volts avc or less), do not adjust the trimmer. If insertion of the iron end of the tuning wand causes a greater increase, adjust the trimmer for maxumum output.

k. Repeat steps i, and j, for the secondary of T-401 and the primary and secondary of T-402.

l. Repeat steps e, to k, until no further improvement is noted.

m. Check the gain over the frequency range by noting the input required from the signal generator to give an avc reading of 4.0 volts for each 1.0 mc increment of receiver tuning from 40.0 to 49.0 mc. The ratio of the largest to the smallest value of signal input should not be more than 1.41 to 1 (3 decibels). If the gain ratio is below 3 decibels, repeat the alignment procedure until the gain ratio is below the 3 decibel maximum.

NOTE: If all the amplifier trimmer capacitors are tuned for maximum capacity, the amplifier may oscillate due to mutual coupling provided by excessive chassis currents. This condition should not exist in actual operation as the trimmers should tune approximately 10 to 18 turns out from the maximum capacity position. To avoid the above conditions, never start alignment procedure with the trimmer capacitors tuned for maximum capacity.

n. Replace tubes V-102 and V-305.

F. Alignment of Main Oscillator

1. The crystals in the main oscillator are military type CR-32/U units with a frequency tolerance of .002%.

2. The main oscillator frequency can be varied over a small range by tuning L-222 to L-239 and checking the frequency with the Gertsch FM-3 Frequency Meter.

   a. The limit of frequency variation by this method is small when oscillator reliability and maximum drive to the succeeding stages are considered.

3. For this reason, the method used in this laboratory will be to adjust L-222 to L-239 for maximum drive and then measure the frequency under this condition.

   a. Connect a VTVM to test point C-302.

   b. Set receiver frequency at 22X.X mc to tune L-222; 23X.X to tune L-223; etc, to 39X.X to tune L-239.

   c. Adjust L-222 to L-239 for maximum meter indication.

4. Remove plate voltage from the receiver by operating the TRACKING CONTROL switch located at rear of chassis to the OFF position.

5. Connect R-F cable to INPUT/OUTPUT jack of Gertsch frequency meter. Connect other end of cable to receiver chassis and to plate voltage connector at C-204 (See Fig. 5-1 of TO #16-350A192-3) through an isolating capacitor. Turn TRACKING CONTROL to ON.

6. Referring to Figure 3-3 PAGE 10 of the Maintenance Instructions, measure a crystal frequency between 30 mc and 38.8889 mc. Record crystal frequency (indicated), the actual frequency (measured), and the percent deviation of measured frequency from indicated frequency (percent error).

7. Follow tuning instructions for the Gertsch Frequency Meter for "SECTION A - To measure a frequency."

   CAUTION: Always check for "Lock-in" (frequency meter step 6) by detuning HF OSC knob A slightly in either direction. If signal in headphones changes pitch with even a slight detuning of HF OSC knob, look for another beat note with the LF OSC knob C. With the correct beat note selected, RF OSC knob may be moved 5 or 10 degrees before the signal "pops" out of zero beat.

G. Alignment of Frequency Multiplier Amplifier

1. In general, since most adjustments of the Frequency Multiplier Amplifier are made by bending, and because it is possible to check adjustments without the necessity for re-making them, by use of the tuning wand, the laboratory procedures will be confined to checking alignment unless extreme misalignment is encounted.

2. Adjust receiver controls as follows:

   a. Same as Step C-2.

   b. Frequency as indicated in the following procedure.

3. Remove screws from Frequency Multiplier Amplifier right end cover plate but leave plate in place. (Cover may be off as result of familiarization experiment)

4. Attach D-C lead of VTVM to C-309.

5. Set receiver frequency to 320.0 mc.

6. Tune step tuner, Z-301, trimmer, (See Figure 5-1, TO #16-350A192-3) for maximum voltage reading on VTVM.

7. Set receiver frequency at 390.0 mc.

8. Check step tuner tuning at 390.0 mc by sliding side cover plate upward enough to insert tuning wand near the coil.

9. If insertion of iron end increases VTVM reading, this is an indication more inductance is needed. Compress turns of coil.

10. Set receiver frequency at 320.0 mc and retune step tuner.

11. Repeat steps 7 through 10 until minimum tuning deviation occurs over frequency range. This completes tuning of Z-301,

12. Replace side cover plate.

13. Attach VTVM to J-402.

14. Check tuning of trimmer capacitors of Z-303, Z-305, Z-307, and Z-309 for maximum meter indication at receiver frequency of 380.0 mc.

15. Set receiver frequency at 390.0 mc.

16. Check tuning of each tuner by inserting tuning wand in front access hole. Remember whether iron or brass is required to increase AVC voltage of each tuner. Repeat for 310 and 220 mc. Consult with instructor as to advisability of tab bending if tuning wand produces upward deflection on VTVM at J-402 in excess of 0.5 volts. (See page 60-61 of TO #16-350A192-3). Voltage measured at J-402 should be between -0.8 and -2.5 v. for all 18 positions of 10 mc Autopositioner.

H. Alignment of R-F Amplifier

1. Adjust receiver controls as follows:

   a. Same as Step C-2.

   b. Frequency as indicated in following procedure.

2. Connect 608D signal generator output to antenna jack J-1212.

3. Connect VTVM to AVC jack, J-606, or AVC jack on front of receiver.

4. Set receiver frequency to 360.5 mc.

5. Adjust signal generator output frequency to 360.5 mc by tuning for maximum receiver AVC voltage. (Signal Generator Modulation OFF)

6. Maintain signal level to give AVC reading of about 5.0 volts.

7. Adjust R-F tuner trimmers to give maximum AVC voltage.

8. Check R-F amplifier tracking at 390.5 mc, 380.5 mc, etc., to 220.5 mc.

NOTE: Output frequency of signal generator should be changed to correspond with indicated receiver frequency, tuning for maximum AVC voltage for each tracking point checked. Signal generator output level should be maintained at value determined in step 6.

9. The tuning wand will be found to be relatively ineffective below approximately 250 mc in checking the first and second R-F stages due to the low impedance of the tank circuits of the grounded grid amplifiers. If tuning wand produces an upward deflection in excess of 1 volt (AVC on VTVM), check with instructor as to the adviseability of tab bending.

PROCEDURE II (Performance Measurements)

A. General

1. Although a slight saving of time might be effected by combining some performance tests with the alignment procedures, they are accomplished separately here in order to present them in a form more useful to the student for signal tracing or performance measurements in the field.

2. Some data obtained will be in the nature of typical readings and will vary between receivers, while others must conform to established performance criteria. Refer to Figure 5-4, Page 54, TO #16-350A192-3, for normal readings at each step.

B. Third I-F Sensitivity

1. Remove V-501 and connect Model 65B Signal Generator direct to J-503. Connect VTVM to AVC jack J-606. Refine signal generator frequency at 2.05 mc and adjust its output to produce 1.0 volt above the static voltage existing at J-606 in the absence of a signal. Record on the attached performance data sheet. Replace V-501. The required signal generator output voltage should not exceed 625 uv.

C. Second I-F Sensitivity

1. Remove V-402 and V-404 and connect Model 65B Signal Generator direct to J-404. Connect VTVM to AVC jack J-606. Set receiver tenth mc frequency to .5 mc. Tune signal generator to 9.5 mc for maximum AVC voltage, and adjust its output to produce 1.0 volt above the static voltage at J-606. Record on data sheet. The required signal generator output voltage should not exceed 72 uv. Replace V-402 and V-404.

D. First I-F Sensitivity

1. Remove V-102 and V-305. Connect Hewlett-Packard Model 608D Signal Generator direct to J-402. Connect VTVM to AVC jack J-606. Set receiver unit and tenth mc frequency to 5.5 mc. Tune signal generator to 45.5 mc for maximum AVC voltage, and adjust its output to produce 1.0 volts above the static voltage at J-606. Record on data sheet. The required signal generator output voltage should not exceed 12 uv. Replace V-102 and V-305.

E. Third Oscillator Activity

1. Connect VTVM to J-504. Record the voltage at each tenth mc step from .0 to .9 mc by changing autopositioner. Use VTVM probe containing 1-megohm resistor (D-C probe).

F. Second Oscillator Activity

1. Connect VTVM to J-405. Record the voltage at each 1 mc step from 0 to 9 mc by changing autopositioner.

G. Main Oscillator Activity

1. Connect VTVM to test point R-302, C-302. Record the voltage at each 10 mc step from 22x.x to 39x.x by changing autopositioner.

H. Frequency Multiplier Amplifier

1. Connect VTVM to J-402. Record the voltage at each 10 mc step from 22x.x to 39x.x mc by changing autopositioner.

I. R-F Sensitivity

1. Set receiver controls as follows:

a. AF GAIN to O (minimum).

b. RF GAIN to 10.

c. FREQ RESPONSE to NARROW.

d. Frequency selector unit set to 315.5 mc.

e. QUIETING control set to maximum (42 db).

f. SQUELCH switch set to ON.

2. Connect the output meter to the receiver PHONES jack. Set the output meter impedance to 600 ohms and level multiplier to 100.

3. Connect the UHF Signal Generator to the receiver antenna input.

4. Turn signal generator POWER to OFF.

5. Connect VTVM to AVC volts jack on front panel or to J-606 on Third I-F Amplifier unit.

6. Reduce R-F GAIN until CARRIER light goes out. (If CARRIER light is already extinguished, leave R-F GAIN control at maximum setting)

7. Record setting of R-F GAIN control on attached performance data sheet.

8. Turn SQUELCH switch to OFF.

9. Turn signal generator POWER switch to ON.

10. Set signal generator output to 3 microvolts, on operating frequency, with 30% modulation at 1000 cps.

11. Refine signal generator output frequency adjustment, tuning for maximum receiver power output. (It will be necessary to adjust A-F GAIN control to give output indication)

12. Adjust A-F GAIN control to produce 1.0 watt (30 dbm) indication on output meter.

13. Switch signal generator modulation selector to EXT MOD and note reading of output meter.

a. Output meter reading should drop 10 db or more. (to 20 dbm or less)

(1) If it drops more than 10 db, repeat steps 10, 11, 12 and 13, using a smaller signal input until a signal to noise ratio of 10 db is obtained.

(2) If it fails to drop 10 db, sensitivity is below normal. Check equipment and test equipment settings and connections, and if the trouble cannot be remedied, contact an instructor.

b. Record signal generator output for a signal to noise ratio of 10 db on the attached data sheet.

c. Repeat steps I-1 to I-13 for 220.0 mc and 399.9 mc, recording results on the attached data sheet.

d. The AVC voltage should not change when modulation is switched on and off, but should be greater than the AVC volts obtained with no signal (signal generator attentuator at zero).

J. Selectivity Measurement

1. Since the overall band-pass characteristic of the receiver is determined largely by the 2.05 mc Third I-F Amplifier, selectivity measurement is confined to this section.

2. Adjust 65B Signal Generator output frequency to approximately 2.05 mc with Modulation "OFF". ✓

3. Remove tube V-501.

4. Connect signal generator to J-503 and VTVM to AVC jack, J-606 or AVC jack on front of receiver. ✓

5. Refine signal generator frequency by tuning for maximum AVC voltage and adjust generator output to produce 1.0 volt AVC above the static voltage at J-606. NOTE: If double-humped response is apparent, tune signal generator frequency to minimum between humps.

6. Record AVC voltage. 4.20

7. Record the output of the signal generator. 1000

8. Advance the output of the signal generator to twice the value recorded in step 7. ✓

9. Change the frequency of the signal generator on both sides of 2.05 mc until the AVC reading is obtained as recorded in step 6.

10. Record the two frequencies. (These are the 6 db points). The difference of these frequencies should not be less than 65 kc.

11. To obtain the 60 db bandwidth, set the signal generator output to 1000 times that recorded in step 7.

12. Change the frequency of the signal generator to produce the same AVC voltage recorded in step 6. (Bandwidth should be less than 185 kc).

13. Record the 2X (6 db) and 1000x (60db) bandwidths on the data sheet.

K. Audio Power Output Measurement

1. Connect the output of the Hewlett-Packard 608D Signal Generator to the input of the receiver, antenna jack, J-1212.

2. Attach the General Radio 583A Output Meter (set for 600 ohms) to the phones jack, J-1213.

3. Adjust the settings of the signal generator to produce a 100 microvolt signal, 30% modulated by 1000 cycles, on an output frequency of 399.9 mc.

4. The receiver should produce at least three watts at the main output (PHONES jack), with the A-F and R-F GAIN controls on 10.

5. Reduce A-F GAIN control setting until output is exactly three watts. Record A-F GAIN control setting for 1000 cycles.

6. Repeat measurement using a modulation frequency of 400 cycles, again adjusting the A-F GAIN control for three watts output. Record A-F GAIN control setting for 400 cycles.

L. Carrier-Operated Relay Sensitivity Measurement

1. Connect the UHF signal generator to the antenna input.

2. Set the receiver and signal generator to a frequency of 315.5 mc.

3. Set receiver R-F GAIN to value determined in Step I-7, R-F Sensitivity.

4. Turn SQUELCH switch to ON.

5. QUIETING control set to maximum setting (42 db).

6. Advance signal generator output slowly, from minimum level, until the carrier-operated relay becomes energized (CARRIER light goes on).

7. Note output level of signal generator and record on performance data sheet. (This is the squelch threshold)

REVIEW QUESTIONS

A. Complete applicable review questions and submit to instructor on the day following completion of the experiment.

PERFORMANCE DATA

R-278B RECEIVER ALIGNMENT

R-278 Serial Number 934

Name Charles G. Turner

Date March 30, 1959

MAIN OSCILLATOR
FREQUENCY MEASUREMENT: Crystal Freq. _____ Measured Freq. _____

Frequency Error _____ %

THIRD I-F SENSITIVITY: 500 uv at J-503 for 2.8 v. AVC at J-606.

SECOND I-F SENSITIVITY: 26 uv at J-404 for 2.8 v. AVC at J-606.

FIRST I-F SENSITIVITY: 6 uv at J-402 for 3.4 v. AVC at J-606.

THIRD OSC
J-504:

.0 mc 11 v.	.1 mc 10 v.	.2 mc 11.6 v.	.3 mc 11 v.
.4 mc 11.8 v.	.5 mc 10.7 v.	.6 mc 11.7 v.	.7 mc 10.4 v.
.8 mc 10.8 v.	.9 mc 11.8 v.		

SECOND OSC
J-405:

0 mc 2.5 v.	1 mc 2.7 v.	2 mc 2.7 v.	3 mc 2.7 v.
4 mc 2.45 v.	5 mc 3.2 v.	6 mc 3.25 v.	7 mc 3.35 v.
8 mc 3.4 v.	9 mc 3.3 v.		

MAIN OSC
C-302:

22 mc 1.7 v.	23 mc 1.65 v.	24 mc 1.5 v.	25 mc 1.5 v.
26 mc 1.5 v.	27 mc 1.4 v.	28 mc 1.7 v.	29 mc 1.65 v.
30 mc 1.65 v.	31 mc 1.6 v.	32 mc 1.6 v.	33 mc 1.6 v.
34 mc 1.55 v.	35 mc 1.5 v.	36 mc 1.5 v.	37 mc 1.35 v.
38 mc 1.4 v.	39 mc 1.35 v.		

FREQ MULT AMP J-402:

22 mc .6 v.	23 mc .65 v.	24 mc .65 v.	25 mc .9 v.
26 mc 1.12 v.	27 mc 1.32 v.	28 mc 1.7 v.	29 mc 1.7 v.
30 mc 1.8 v.	31 mc 1.6 v.	32 mc 1.7 v.	33 mc 1.4 v.
34 mc 1.5 v.	35 mc 1.5 v.	36 mc 1.35 v.	37 mc 1.2 v.
38 mc 1.2 v.	39 mc 1 v.		

R-F SENSITIVITY:

@ 315.5 mc: 1.9 uv, for 10 db S/N. R-F GAIN setting 9.

@ 220.0 mc: 1.9 uv, for 10 db S/N. R-F GAIN setting 9.

@ 399.9 mc: 3 uv, for 10 db S/N. R-F GAIN setting 8.8.

THIRD I-F SELECTIVITY: 2 X (6db) 80 kc. 1000 X (60db) 160 kc.

AUDIO POWER OUTPUT: 100 uv input, 400 cycles, 3 watt output. A-F GAIN setting 8.5.
100 uv input, 1000 cycles, 3 watt output. A-F GAIN setting 7.5.

CARRIER-OPERATED RELAY: @315.5 mc, with R-F GAIN control set to squelch on noise only:
R-F GAIN setting 8.8.
Relay operates with .45 uv input.

2.13
1.97 Hi-side
.16

2.1

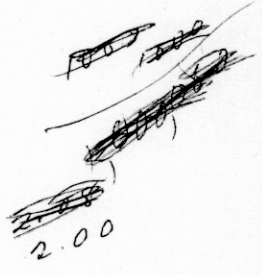

CAA AERONAUTICAL CENTER
AIR NAVIGATION FACILITIES BRANCH
COMMUNICATIONS EQUIPMENT UNIT

UHF MILITARY EQUIPMENT LABORATORY EXPERIMENT

Name Charles G. Turner

Date 3/31/59

T-217A TRANSMITTER AND MD-129A MODULATOR-POWER SUPPLY FAMILIARIZATION

PURPOSE OF EXPERIMENT

The purpose of this experiment is to familiarize the student with the electrical and physical characteristics of the T-217A Transmitter and the location of subassemblies, major components, and test points. The student will become acquainted with the various controls, and learn their functions and effect. Additionally, he will acquire practice in the removal and replacement of subassemblies and perform the mechanical synchronization checks necessary to insure proper operation.

REFERENCES

Handbook Maintenance Instructions, T.O. #16-350A104-3

Lecture Notes

UHF Military Equipment Course Material

EQUIPMENT REQUIRED

Transmitter, T-217A/GR

Modulator-Power Supply, MD-129A/GR

R-F Load, 52 ohm Termaline

Tool Box with small Hand Tools

Microphone, T-17D

PROCEDURE I (Familiarization)

CAUTION: Extreme care must be used in handling Transmitter and Modulator-Power Supply units to avoid personal injury and major damage to equipment. Always use two men to handle these units and corrdinate your movements since they are quite heavy. Keep hands and feet clear to avoid serious personal injury in case of mishap. Observe usual precautions to avoid electrical shock.

A. Locate and identify controls of T-217A and MD-129A.

1. Set controls as follows:

a. NORMAL-EMERGENCY switch to NORMAL.

b. NORMAL-BROAD switch to NORMAL.

c. VOICE-MCW switch to VOICE.

d. ANTENNA SELECTOR SWITCH to OMNI-ANT.

e. CHANNEL SELECTOR (on T-217A) to "1".

f. CHANNEL 1 preset switches to 29 - 7 - .4 (297.4 mc)

g. LIMITER and AUDIO GAIN controls both to "O"

2. Identify all controls and indicators on C-806/GR Control Indicator Panel.

B. Locate and identify subassemblies

1. Modulator-Power Supply

a. Check fuses on front panel of MD-129A to ascertain the values are correct for the line voltage in use.

b. Remove A-C line power and disconnect all cables from Modulator-Power Supply.

c. Remove MD-129A from rack, turn up on handles and remove dust cover.

d. Locate:

(1) Safety interlock switches

(2) Meter fuses

(3) Safety Switch S-1411

e. Identify tubes and functions of each.

f. Replace dust cover and return modulator to rack.

2. Transmitter

a. Remove T-217A from rack, turn up on handles and remove dust cover.

b. Identify the following sections:

(1) Main Oscillator

(2) Frequency Multiplier-Amplifier

(3) I-F Oscillator Assembly

(4) Exciter

(5) Driver

(6) Power Amplifier

(7) Monitor Amplifier

(8) Servo Amplifier

C. Locate Test Points - Transmitter

1. Black phone tip jacks J-401, J-402, J-403, and J-501.

2. Condenser tabs on Multiplier-Amplifier C-302, C-308, and C-315.

3. Locate test points also on schematic diagram.

4. Locate HIGH VOLTAGE label on right side of transmitter and insulated terminal associated with it.

7. Turn AUDIO GAIN up slowly while talking into the microphone to obtain 50% modulation as indicated on the MODULATION meter.

PROCEDURE II (Removal and replacement of subassemblies)

PRECAUTION: Do not key the transmitter ON during the following procedures.

A. Removal of Monitor Amplifier

1. Remove Plug P-1301 (It may also be necessary to remove P-701)

2. Loosen four red-headed captive screws securing the chassis.

3. Lift amplifier from main chassis.

4. Examine the Monitor Amplifier.

5. Do not replace Monitor Amplifier at this time.

B. Removal of Servo Amplifier

1. Remove P-701.

2. Loosen four red-headed captive screws and lift Servo Amplifier from main chassis.

3. Remove bottom plate of Servo amplifier by removing two screws below controls and sliding bottom plate forward.

4. Examine Servo Amplifier. Note schematic and parts placement drawing on chassis and cover.

5. Replace Servo Amplifier and Monitor Amplifier. This is best done by reversing procedure for removal.

C. Removal of I-F Oscillator Assembly

1. Set transmitter frequency to 360.0 mc.

2. Disconnect cables from front panel and set transmitter on front handles.

3. Unplug P-401.

4. Remove small shield from rear end of I-F Oscillator Unit.

5. Remove two screws from outer edges of each bonding strip at rear of I-F Oscillator Unit.

6. Disconnect R-F connections to Exciter and Frequency-Multiplier Amplifier.

7. Loosen six red-headed captive screws and lift out unit. Do not lose the loose parts of the Oldham couplers.

8. Remove bottom plate of I-F Oscillator Unit on which circuit diagram is printed.

9. Observe cam and shaft arrangement for positioning slugs.

   a. Note how the coupler beneath T-401 allows the rear shaft to be moved vertically through a small range.

   b. Note which slugs are positioned by the rear shaft.

   c. Note that slugs may be screwdriver tuned from either top or bottom of chassis.

10. Note location of Switch S-1202A/B (Part of Servo System).

11. Replace I-F Oscillator Unit by following removal procedure in reverse order.

   a. The correct positioning of the shafts on I-F Oscillator is with two red dots on rear eccentrics toward each other. This is the 360.0 mc position.

   b. If couplers do not mesh, slightly rotate gears behind P-701.

D. Removal of Power Amplifier and Servo Mechanism

1. Lay transmitter on its right side and turn until the bottom side is toward you. In this position the driver subassembly is in the upper right hand corner.

2. Remove the following R-F cables and parts.

   a. Cable W-1203 (Antenna Selector Relay to Antenna Changeover Relay)

(1) Loosen "L" connector on antenna selector relay slightly and turn connector 90° clockwise to provide clearance between PA Assembly and connector during removal of PA Assembly.

b. Cable W-1202 (Antenna Changeover Relay to Directional Coupler).

c. Cable W-1201 (Low Pass Filter to P.A. Output)

d. Remove small cables and crystals from directional coupler. Crystals are marked "A" and "B" to identify correct position.

e. Remove directional coupler (four nuts).

f. Disconnect r-f input to PA grid by removing elbow.

g. Remove low pass filter. Mounting hole in lower end may be slotted to preclude necessity of removing that screw completely.

3. Remove Servo Plug P-601 and PA Plug P-602.

4. Disconnect (at insulated screw terminal) the high voltage lead from front panel jack J-1211 to terminal labeled HIGH VOLTAGE by loosening nut.

5. Remove two screws on right side of transmitter frame that fastens bracing struts to bottom of Servo mechanism.

6. Remove five large Phillips head screws that hold the PA Chassis to center section of transmitter frame. These are not captive screws and care should be taken not to drop them into transmitter.

7. Slide PA and Servo assembly out through bottom of transmitter.

8. Examine parts of transmitter exposed by removal of PA assembly.

9. Remove cover on plate side of PA assembly.

NOTE: DO NOT REMOVE PA TUBES UNLESS INSTRUCTOR IS CONSULTED. BREAKAGE OF SOCKET CLIPS MAY OCCUR UNLESS TUBES ARE REPLACED CAREFULLY AND PROPERLY.

a. Examine the plate tuning mechanism. This is identical to the PA grid tuning mechanism.

b. Note r-f coupling loop moves with shorting bar.

c. Teflon cover plate is used to concentrate air-flow through tube cooling fins.

d. Observe design of C-610 and C-611.

e. Leave PA Plate cover off until PA Assembly is replaced in a later experiment.

10. Examine Servo Mechanism

a. Note spring loading drum on Gear 0-614.

b. Note that main gear 0-605, can rotate only 180 degrees.

c. Note ratio between turning of 0-605 and Helipot R-601.

11. PA assembly is NOT replaced at this time because it restricts access to trimmer adjusting holes in i-f oscillator unit. PA assembly will be replaced after alignment of driver unit in the next experiment.

12. Other subassemblies are not removed at this time. Frequency Selector, Exciter, Driver, Frequency Multiplier-Amplifier, and Main Oscillator sub-assemblies are also removable. Removal of the Frequency Selector Unit is accomplished during the receiver experiments and therefore will not be done in the transmitter experiment since the Frequency Selector Units are identical and interchangeable. Removal of the other subassemblies is not complicated and does not expose as much of the interior of the transmitter as does removal of the I-F Oscillator and PA Assemblies. Moreover, removal of these assemblies involves removal of a number of soldered connections which when done frequently (as would be the case with these laboratory transmitters) would result in rapid deterioration of wiring and components. Detailed procedures for removal of these subassemblies is given in the Instruction Book.

PROCEDURE III (Mechanical Synchronization Checks)

A. Criteria for determining correct adjustment of Mechanical Drive System.

1. Reconnect power supply cable.

2. Remove High Voltage cable at MD-129A and terminate high voltage output of MD-129A with "D-C Dummy Load". This removes high voltage from PA tubes. It will not be necessary to reconnect this high voltage cable until the latter part of the next experiment when tracking of the PA Plate circuit is accomplished.

3. Do not key transmitter plate voltage ON during these checks.

4. Since some of the following mechanical checks may be difficult to locate for the first time, the instructor will be available for assistance.

5. Make the following mechanical synchronization checks:

a. With a frequency of 390.0 mc selected, and the transmitter laying on its side, the Oldham couplers between the frequency selector and the transmitter proper are visible from the bottom of the unit. The scribe lines on these couplers should line up with the scribe lines on blocks attached to the front gear plate at a frequency of 390.0 mc.

b. With the transmitter in the normal position (bottom down), and a frequency of xx0.x selected, the calibrated dial ahead of the i-f amplifier should indicate "0".

c. With a frequency of xx9.9 selected, the iron cores in transformers Z-401, T-401, T-402, and T-403 should be in the position where the least amount of core is in the coil.

d. With a frequency of xx5.x selected, the rotary crystal switch in the h-f oscillator of the i-f oscillator section should be on crystal number "5". Replace compartment cover.

e. With a frequency of xxx.5 selected, the rotary crystal switch in the 1-f oscillator of the i-f oscillator section should be on crystal number "6". Replace crystal compartment cover.

f. With a frequency of xx0.x selected, the cam follower which rides on the step cam in the rear gear train should be on the highest point of that cam.

g. With a frequency of 39x.x selected, the calibrated dial ahead of the frequency multiplier-amplifier should indicate "39".

h. With a frequency of 22x.x selected, the coil selector switch in the main oscillator unit should be making contact with coil #L-222. Hold a flashlight over the center hole of the coil cover. The switch contact for coil #22 (L-222) may be seen directly below the smaller hole between coils 22 and 39.

i. With a frequency of 22x.x selected, the crystal switch in the main oscillator should be making on crystal #18. Replace crystal oven cover.

j. With a frequency of 360.5 selected, the rotor bar on frequency multiplier-amplifier, exciter, and driver tuners should be aligned with the short stator bar.

k. With a frequency of 390.5 selected, the rotor bar on frequency multiplier-amplifier, exciter, and driver tuners should, with the exception of Z-103, bisect the access hole. Z-103 rotor bar should be 90° from the access hole and toward Z-102.

l. With a frequency of 39x.x selected, and the side (schematic) cover of the frequency multiplier-amplifier removed, the wiper on the toroidal tuners (step tuners) should be centered on the smallest winding with gear shoulder against direction of rotation. Leave cover off until later.

6. While the foregoing mechanical checks are sufficient for this experiment, a complete table of mechanical checks may be found on Pages 61-62 of the Instruction Book.

REVIEW QUESTIONS

A. Complete applicable review questions and submit to instructor on the day following completion of the experiment.

CAA AERONAUTICAL CENTER
AIR NAVIGATION FACILITIES BRANCH
COMMUNICATIONS EQUIPMENT UNIT

UHF MILITARY EQUIPMENT LABORATORY EXPERIMENT

Name _____

Date _____

T-217A TRANSMITTER ALIGNMENT

PURPOSE OF EXPERIMENT

The purpose of this experiment is to train the student in the proper methods of alignment, tracking, adjustments, and tests required to insure proper operation of the T-217A transmitter. In doing so, he will acquire a more detailed knowledge of the operation of the circuits involved and become familiar with the troubleshooting techniques required.

REFERENCES

T. O. #16-350A104-3, Handbook Maintenance Instruction T-217A/GR and MD-129A/GR

Lecture Notes

UHF Military Equipment Course Material

EQUIPMENT REQUIRED

Transmitter, T-217A/GR

Modulator-Power Supply, MD-129A/GR

R-F load, 52 ohm Termaline

Vacuum Tube Voltmeter

Kit of hand tools with special alignment tools

RG-8/U connecting cables and fittings

PROCEDURE

The alignment and tracking procedure given in the Instruction Book presupposes that the initial adjustments are not even approximately correct; i. e. some of the circuits may be set where they will have greater response to an undesired signal than to the desired one.

Therefore, in each case preliminary mechanical settings are described by which it is supposed to insure that each circuit will have maximum response to the desired signal. After these preliminary mechanical settings, all adjustments are refined to produce the desired electrical indications. This procedure is so detailed as to obscure the principle steps of the alignment and tracking procedure. Moreover, it has been found that, at least in some cases, the preliminary mechanical settings did not result in greater response to the desired signal than to some undesired signal. For the foregoing reasons, and since the transmitters in the laboratory are already approximately aligned and since this is the situation usually found in practice, the following procedure omits the preliminary mechanical settings and proceeds with the final adjustments in each case. After having accomplished the abridged procedure one or more times a person is in a better position to go through the complete procedure without becoming lost in detail.

A. Preliminary Conditions

1. P. A. Assembly is removed from transmitter (in Familiarization Experiment)

2. Replace Directional Coupler temporarily in transmitter. Replace cables, W-1203 and W-1202. Connect E-1209 (Driver Output) to P-1203 (Directional Coupler Input) by use of a junction UG-29/U.

3. Connect D-C Dummy Load to High Voltage Jack, J-1408, (marked TRANSMITTER on front panel) on Modulator-Power Supply.

4. Connect MAIN POWER cable between Transmitter and Modulator.

5. Connect R-F Dummy Load to OMNI ANTENNA jack on front of transmitter.

B. Main Oscillator Alignment

1. Since the method of adjusting the Main Oscillator is identical in the multi-channel transmitter and receiver, and since it is accomplished in the receiver experiments, it is omitted here.

C. Frequency Multiplier-Amplifier Alignment

IN THIS OR ANY OF THE FOLLOWING ALIGNMENT PROCEDURES, IF IT IS DETERMINED THAT BENDING OF TRIMMER INDUCTANCES OR CONDENSER TABS IS REQUIRED, CONSULT INSTRUCTOR BEFORE ATTEMPTING SAME.

1. Remove side cover from Z-301 and Z-302. (See Fig. 6-10)
2. Turn main POWER switch ON. Connect VTVM to C-308 and when set has reached operating temperature, apply Plate Voltage.
3. Set Frequency Selector to 300.0 mc.
4. Adjust trimmer capacitor of Z-301 for maximum indication on VTVM.
5. Set Frequency Selector to 390.0 mc.
6. Place one end of a tuning wand close to the small trimmer coil associated with Z-301 and note change (if any) in VTVM indication.
7. Place other end of tuning wand close to trimmer coil and again watch for change in VTVM.
8. If VTVM deflection does not increase when either end of tuning wand is inserted tracking is satisfactory. If insertion of brass end of tuning wand causes an increase in deflection the trimmer coil should be extended in length (less inductance); if insertion of iron end of tuning wand causes an increase in deflection the trimmer coil should be compressed (more inductance).
9. If trimmer coil is stretched or compressed repeat steps 3 through 8 until indication of satisfactory tracking is obtained.
10. Disconnect VTVM from C-308 and connect it to C-315.
11. Repeat steps 3 through 9, this time aligning Z-302 rather than Z-301.
12. Replace side cover on Z-301 and Z-302.
13. Disconnect VTVM from C-315 and connect to J-403. Remove V-405 and disconnect B plus voltage from V-406, by removing red and white wire from terminal E-429 (near T-403 on top of chasis)
14. Set frequency selector to 360.5 mc.
15. With a fiber screwdriver, adjust the trimmer capacitors associated with Z-304, Z-306 and Z-308 for maximum VTVM deflection.
16. Set Frequency Selector to 390.5 mc.

17. Check for tracking by inserting first one end and then the other of the tuning wand in the front (small) hole of Z-304, Z-306, and Z-308 while watching for any change in VTVM deflection. If VTVM deflection does not increase in any case the tracking at this frequency is satisfactory.

18. Repeat step 17 for frequencies of 320.5, 280.5 and 220.5 mc.

19. If tracking is satisfactory at these frequencies and if voltage at J-403 (with V-405 removed and B plus removed from V-406) is more than 5 volts for all 18 positions of the 10 mc preset switch, tracking of Z-304, Z-306, and Z-308 is satisfactory for all frequencies. If it is found that tracking adjustments are required it will be necessary to follow the complete adjusting procedure given in Section 6-19, Paras. m. through r. of the instruction book.

D. I-F Oscillator Alignment

1. Replace V-405 but leave B plus to V-406 disconnected.
2. Remove V-305 and V-101.
3. Set Frequency Selector to 390.0 mc and connect VTVM to J-402.
4. Insert first one end and then the other of a tuning wand into the hole on top of Z-401. If the VTVM reading increases in either case adjust L-405 for maximum indication on VTVM.
5. Set frequency selector to 399.0 mc.
6. Insert first one end and then the other of the tuning wand into the hole on top of Z-401. If the VTVM reading increases in either case adjust C-433 for maximum indication on VTVM.
7. Repeat steps 3 through 6 until insertion of either end of tuning wand at either frequency does not cause an increase in the VTVM reading.
8. The VTVM reading for all 10 positions of the 1.0 mc Preset switch should be -2 to -4 volts.
9. Remove VTVM from J-402 and connect to J-401.
10. The VTVM reading for all 10 positions of the 0.1 mc Preset switch should be -10 to -25 volts.

11. Remove VTVM from J-401 and connect to J-403.

12. Set Frequency Selector to 399.0 mc.

13. Insert first one end and then the other of tuning wand into each of the two holes on top of T-401, T-402, and T-403 (first primary and then secondary) in that order and watch for any change in VTVM reading. If the VTVM deflection increases in any case, adjust the corresponding trimmer capacitor for mzximum deflection of the VTVM.

NOTE: In most cases only a slight adjustment of these capacitors is necessary. Using a tuning wand to determine which of the units need adjustment will help in obtaining a reading at J-403. When such an indication is available, determine that tuning is at the proper frequency by removing V-402. The voltage at J-403 should drop to Zero, indicating that the transformers are tuned to the sum of the high and low frequency oscillators. Replace V-402 and proceed.

14. Set Frequency Selector to 390.0 mc.

15. Insert first one end and then the other of a tuning wand into the primary and then the secondary of T-401, T-402, and T-403, in that order while watching VTVM for any change in deflection. If the VTVM increases in any case adjust the corresponding slug for maximum indication on the VTVM.

16. Repeat steps 12 through 15 until insertion of either end of the wand at either frequency into any of the six holes does not cause an increase in the VTVM deflection.

17. Replace tubes V-101 and V-305 and connect B plus to V-406.

E. Exciter Alignment

1. Remove VTVM from J-403 and connect it to J-501.

2. Set Frequency Selector to 360.5 mc.

3. With a fiber screwdriver, adjust the trimmer capacitors associated with Z-101, Z-102, and Z-103, for maximum deflection of VTVM.

4. Set the Frequency Selector to 399.9 mc.

5. Check for tracking by inserting first one end, and then the other of a tuning wand in the front (small) hole of Z-101, Z-102, and Z-103, while watching for any change in VTVM deflection. If VTVM deflection does not increase in any case, the tracking at this frequency is satisfactory.

6. Repeat step 5 for frequencies of 320.5, 280.5, and 220.5 mc.

7. If tracking is satisfactory at these frequencies and if voltage at J-501 is between 1.2 and 8.2 volts for all 18 positions of the 10 mc Preset Switch, tracking of Z-101, Z-102, and Z-103, is satisfactory at all frequencies. If it is found that tracking adjustments are required it will be necessary to follow the complete adjusting procedure given in Section 6-27, paras. k. through n. of the instruction book. (See Instructor)

F. Driver Alignment

1. Driver output is still terminated in 52 ohm R-F load (through Directional Coupler, Z-1202, Antenna Selector Relay, K-1204, and Antenna Jack on front panel). As the Driver output is patched through the Directional Coupler, the Driver output power may be read on the Power Output Meter on the Transmitter front panel.

2. Set Frequency Selector to 360.5 mc and turn on plate voltage.

3. With a small screwdriver, tune trimmer capacitors associated with Z-501, Z-502, and Z-503, for maximum Driver power output.

4. Set Frequency selector to 399.9 mc.

5. Check for tracking by first pushing, and then pulling the tuning screws on Z-501, Z-502, and Z-503, while watching RF power indicator for any change in output. The movable plates of the trimmer capacitors are mounted on flexible straps so that pushing or pulling increases or decreases the trimmer capacity and when the force is released the capacity returns to normal. A SPECIAL TOOL IS AVAILABLE FOR PUSHING AND PULLING ON THE TRIMMER CAPACITORS. USE IT. If the Driver output does not increase in any case when pushing or pulling on the trimmers, the tracking at this frequency is satisfactory.

6. Repeat step 5 for frequencies of 320.5, 280.5, and 220.5 mc.

7. If the tracking is satisfactory at these frequencies and if the output is at least 10 watts for all of the 18 positions of the 10 mc Preset Switch the tracking is satisfactory at all frequencies. If it is found that tracking adjustments are required it will be necessary to follow the complete procedure given in Section 6-30 of the instruction book. (See Instructor)

G. Adjustment of Servo Amplifier

Before proceeding with Servo Amplifier and P. A. Adjustments, turn off main power, disconnect main power cable and replace P. A. Assembly which was removed in the familiarization experiment. To replace P. A. Assembly, follow removal procedure in reverse order. After replacing P. A., reconnect main power cable (High Voltage is still terminated in D.C Dummy Load) and turn on main power.

1. Perform the following Servo mechanical checks:

   a. Referring to figures 6-9 and 3-13 of Instruction Book, examine the position of the plate shorting bars in the P. A. Assembly when the Frequency Selector is at 390.2 mc. The wiping fingers closest to the tubes should be within 1/8" of, and behind the second support pin (from tube holder) that attaches plate line to dielectric support. While this check applies to both the grid and plate shorting bar, only the above check will be made at this time.

   b. Replace P. A. cover plate.

2. Set the 4 potentiometer adjustments on the Servo Amplifier to extreme CCW position.

3. Increase AMPLIFIER GAIN to about 1/2 maximum.

4. Adjust AMPLIFIER PHASE for maximum torque on the two thin driving gears on the Servo drive. Amount of torque can be gauged by displacing the thin driving gears a small amount from the null point and holding them displaced with a finger.

5. The system should now "hunt" if the channel is reset or if the Servo drive gears are displaced from neutral position by hand and released abruptly.

6. Turn DAMPING GAIN about 30 degrees clockwise.

7. Turn DAMPING PHASE slowly through its entire range and observe whether or not hunting ceases at any setting of DAMPING PHASE.

8. If hunting cannot be stopped in Step 7, advance DAMPING GAIN a little more CW (about 10 degrees) and repeat Step 7. Continue this procedure until hunting is just eliminated. Too much DAMPING GAIN will result in sluggish operation and too little will result in excessive oscillation before gears come to rest. With correct adjustments of DAMPING GAIN and DAMPING PHASE the Servo gears should pass through the NEUTRAL point not more than 2 or 3 times before coming to rest.

9. It would seem that the AMPLIFIER PHASE and DAMPING PHASE controls could be set more accurately by use of an oscilloscope. However, the foregoing procedure is the same as that given in the instruction book, so apparently it is satisfactory.

H. Power Amplifier Alignment

1. Synchronize the Servo Amplifier with the Power Amplifier frequency.

   a. Set the 360 wiper of R-1205 (on side of transmitter) in a vertical position.

   b. Set the frequency selector unit to 360.2 mc.

   c. Loosen coupler between Servo Drive and P. A. gear train. (Use #8 long-handled Bristo wrench provided with equipment). It will be necessary to remove the small schematic cover plate in order to permit access to this coupler.

   d. Key transmitter ON.

   e. Manually rotate the P. A. gear train (accessible from the top of the transmitter) until maximum PA GRID CURRENT is indicated on the meter.

   f. Recouple servo drive to P. A. gear train. Replace schematic cover plate.

   g. Cycle frequency selector unit and check to see that servo has reset P. A. to maximum grid current position at 360.2 mc.

2. Align Servo Amplifier electrical input system.

   a. Adjust the contacts on R-1205 in order, setting the frequency selector unit at each 10 megacycle point (399.9 mc, 390.2, 380.2.....etc, to 220.2 mc) while adjusting the corresponding sliding contact on R-1205 for maximum grid current.

3. Turn POWER switch to OFF.

4. Disconnect High Voltage output of Modulator from D-C Dummy Load, and connect it to High Voltage jack on Transmitter.

5. Turn POWER switch to ON.

6. Apply plate voltage and check SWR as rapidly as possible (it will be necessary to adjust SWR CALIBRATE before reading SWR). If the SWR is greater than 2.5, turn off plate voltage immediately and check to see that P. A. output is correctly connected to R-F Dummy Load. If output is correctly loaded, the SWR should not exceed 2.5.

   NOTE: WHEN HIGH VOLTAGE IS APPLIED TO P. A. DO NOT LET THE P. A. PLATE CURRENT EXCEED 450 MA. WHEN MAKING ANY ADJUSTMENTS.

7. Control over the P. A. screen voltage (and thereby P. A. plate current) is provided by means of R-608 (Screen Control Pot.)

   a. Turn R-608 to the extreme counterclockwise position. This is the minimum screen voltage position and is the setting used here at the school to increase tube life.

   b. The following procedure for setting R-608 is printed on the transmitter, but is <u>not</u> to be used here at the school.

      (1) Adjust R-608 for 290 milliamperes of P. A. plate current with V-406 (in I-F Oscillator section) removed from its socket. (This removes excitation to the P. A. stage).

8. Readjust the contacts on R-1205 at 220.2 and 399.9 mc for maximum P. A. grid current.

9. Change the meter switch to Power Output, set the frequency selector unit to 220.2 mc, and adjust capacitors C-610 and C-611 for maximum power output. (Maintain equal adjustments on both capacitors in arriving at maximum power output in order to retain P. A. Plate circuit balance).

10. Set frequency selector unit to 399.9 mc, loosen the coupler holding the grid tank to the power amplifier gear train, key the transmitter, and manually move the power amplifier

gear train (accessible from the top of the transmitter) until maximum power output is indicated on the front panel meter. (Note: Since the grid tank is held stationary by the servo gear train, only the plate tank is moved by moving the power amplifier gear train.)

CAUTION: Since it is possible to damage the shorting bar by setting it too close to the tube end of the lines, the cover should be removed from the P. A. following this step and the physical position of the shorting bar checked. Replace the cover on the P. A. before continuing the procedure.

11. Re-tighten the coupler holding the grid tank to the Power Amplifier gear train.

12. Repeat steps 9, 10, and 11 until both maximum power output and maximum P. A. grid current are obtained at the same point.

13. Readjust the contacts on R-1205 in order at each 10 megacycle point for maximum power output. (399.9 mc, 390.2, 380.2.,.etc to 220.2 mc). If the preceding steps are followed carefully, little or no movement of the R-1205 contacts will be required. This indicates that grid and plate tanks are very closely synchronized.

    a. The P. A. plate current should be between 350 and 450 ma. across the entire frequency range.

    b. Minimum P. A. plate current may not occur at the setting of R-1205 which produces maximum power output. Should this condition exist, it may be necessary to compromise the final tuning adjustment in order to obtain the required 100 watts output without exceeding the maximum P. A. plate current limitation of 450 ma.

    c. If at any 10 mc point the peak grid current and maximum power output are not close, it is probable that the contacts are not making properly at all points along the line, or that the line is dirty. The position of the short circuit established by each of the shorting bars determines the resonant frequency of the parallel line tank and they must make positive contact to the lines at all times to insure power output and reset accuracy.

14. Using the attached meter reading form, take a complete set of meter readings for this transmitter.

15. This completes testing and alignment of the transmitter. Have an instructor check operation of transmitter before replacing cover and returning unit to rack.

REVIEW QUESTIONS

A. Complete applicable review questions and submit to instructor on the day following completion of the experiment.

RECORD OF METER READINGS AND ADJUSTMENTS

Name Charles G. Turner Date 4/1/59

Transmitter Serial Number	917
Output Frequency	(305.5 mc except as indicated below)
A-C Line Voltage	235
CIRCUIT	METER M-1401 (Modulator)
Modulator Plate (without modulation)	60 ma.
P. A. Plate	450 ma.
Driver Plate	60 ma.
Amplifier Plate	42 ma.
Audio Gain Setting	8
	METER M-1201 (Transmitter)
Second Driver Grid	17 ma.
Third Driver Grid	25 ma.
P. A. Grid	3.2 ma.
SWR	1.0
Power Output, watts (305.5 mc)	105 watts
Power Output, watts (220.0 mc)	140 watts
Power Output, watts (399.9 mc)	110 watts

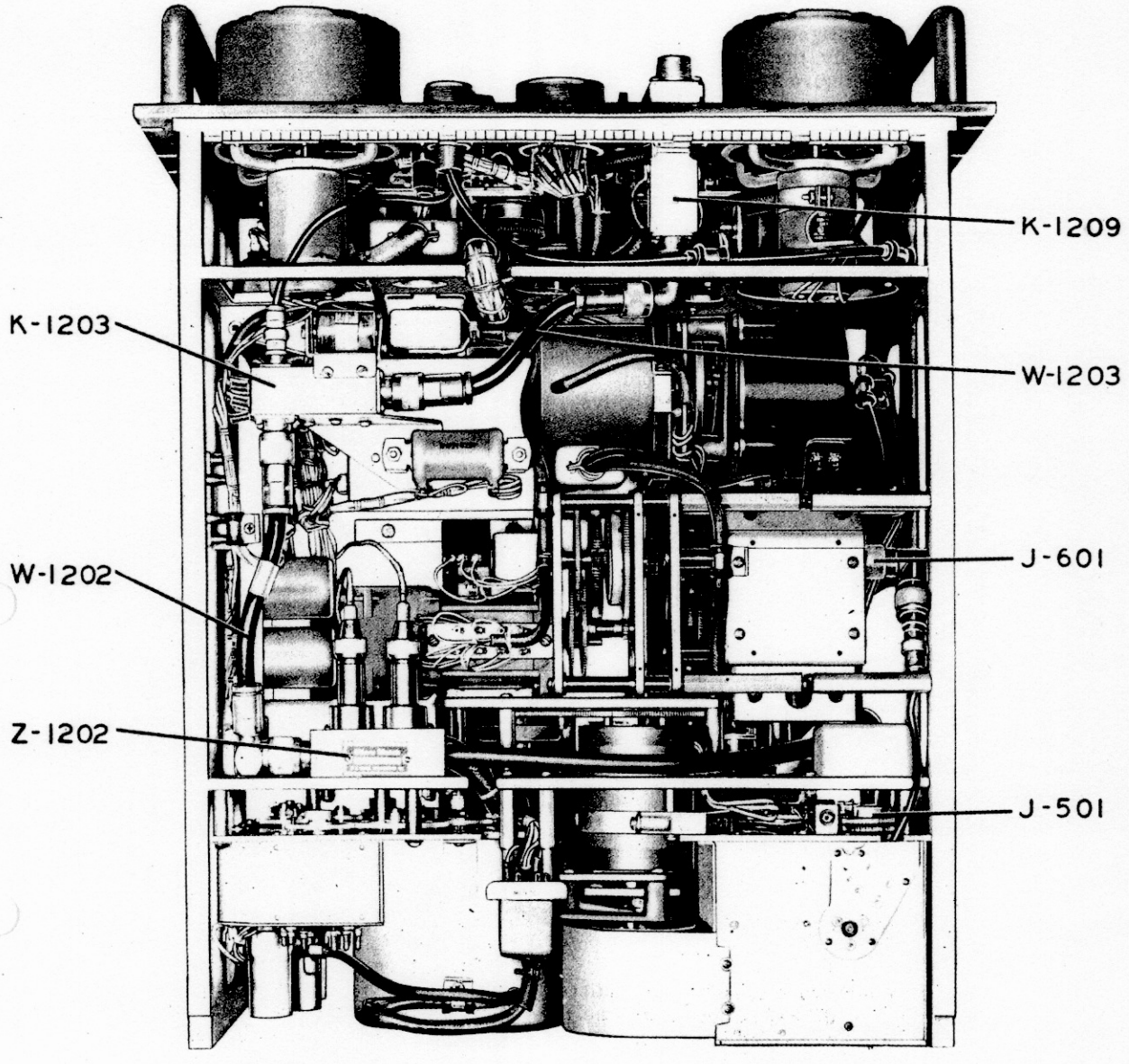

Transmitter T-217/GR, Bottom View

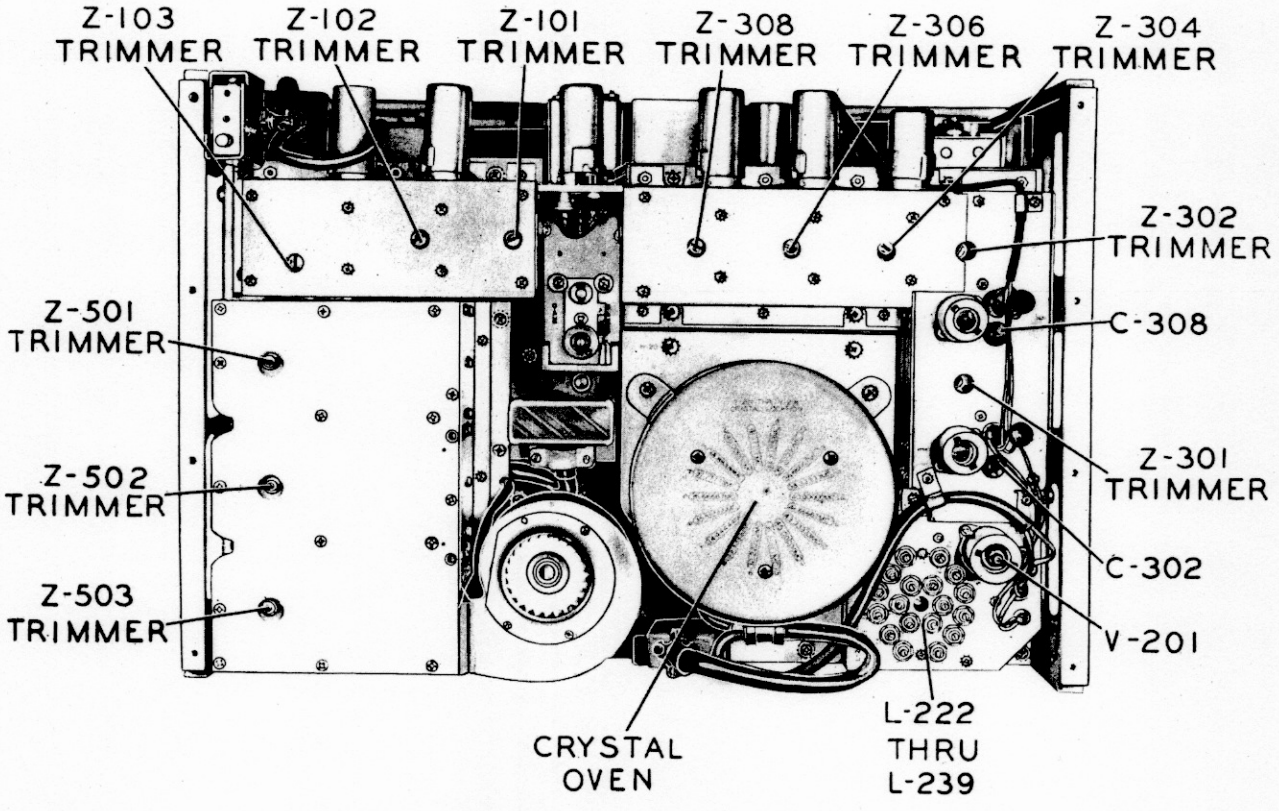

Transmitter T-217/GR, Rear View

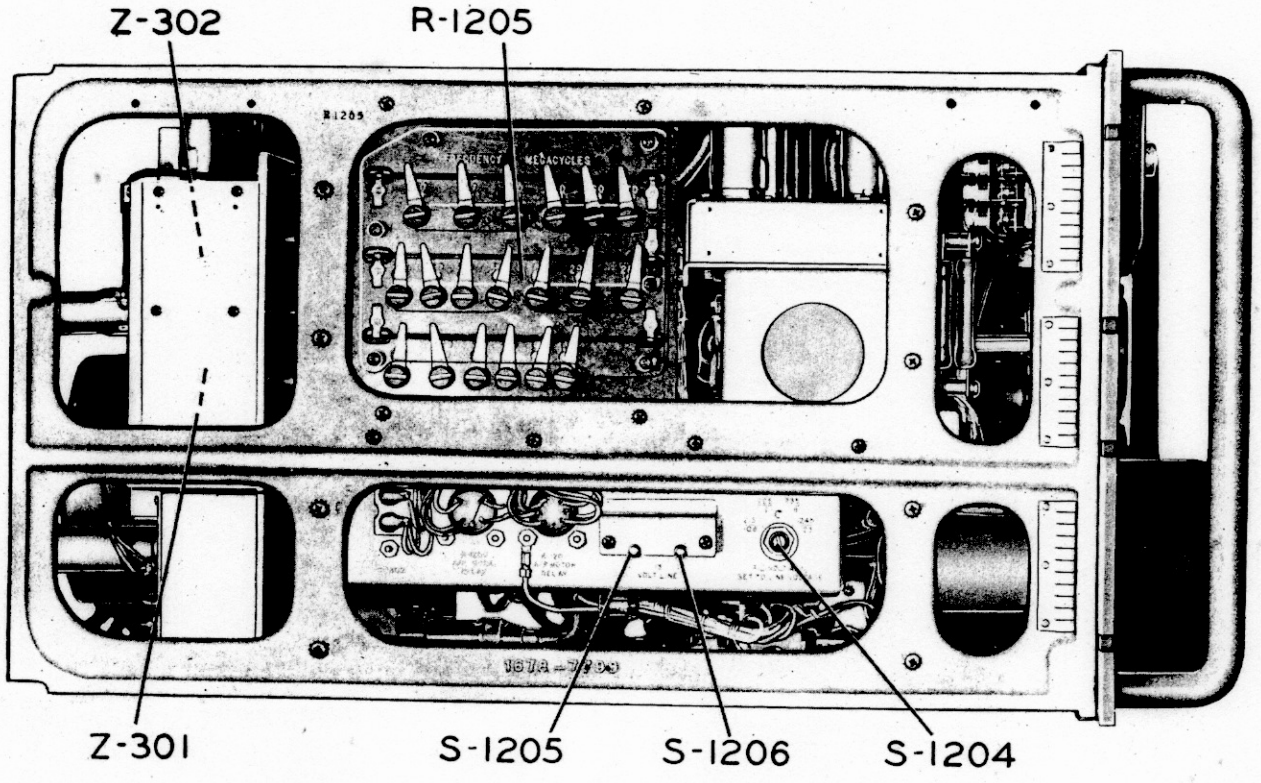

Transmitter T-217/GR, Right Side View

Tip for correct Osc. i-f alignment

i-f Oscillator alignment can be done with a Signal Gen. by injecting the appropriate frequency into V-401-3.5+ disable both oscillators V-402+404, VTVM at test point J-403

i-f frequency of the T-217 is 20.0 mcs. plus X.X, so the freq. for reference at this point is 399.0 so add XX9.0 to 20.0 and the freq. that the i-f's are tuned you would be 29.0 mcs. pulling the low freq. osc. V-402 should cause reading at J-403 to drop

low freq. osc 0.1 mc freq = 1.994 plus 0.X
1.0 mc osc freq = 18.006 plus X.0
i-f freq = 20.0 mc. plus X.X